SPENCER BRISTOL ENGINEERING, INC.
5880 Live Oak Parkway NW, Suite 140
Norcross, Georgia 30093
Tel. 770.414.1628 Fax 770.414.6024
SBE Project No. 06086

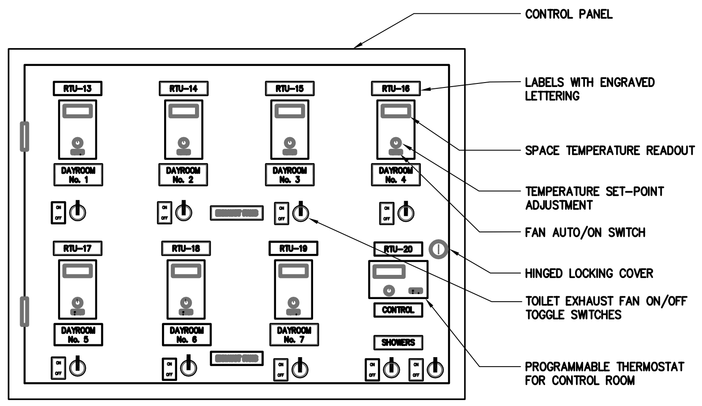

1 / M3.2 TEMPERATURE CONTROL PANEL

NO SCALE

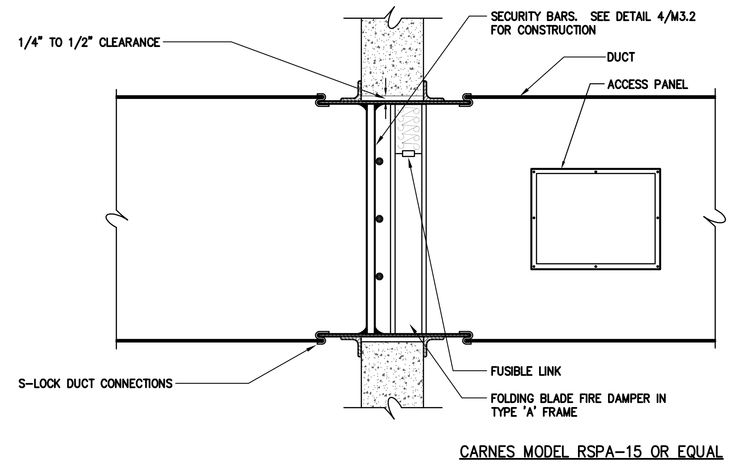

2 / M3.2 COMBINATION WALL SECURITY BARS AND FIRE DAMPER DETAIL

NO SCALE

NOTE: PROVIDE AT ALL LOCATIONS WHERE DUCTS PENETRATE FIRE RATED SECURITY WALLS

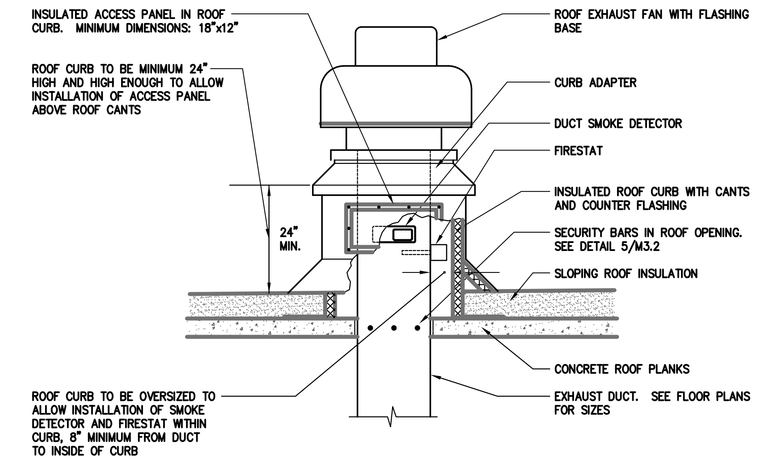

3 / M3.2 ROOF EXHAUST FAN CURB DETAIL

NO SCALE

NOTE: THIS DETAIL APPLIES TO EXHAUST ON BUILDINGS B, D AND E.

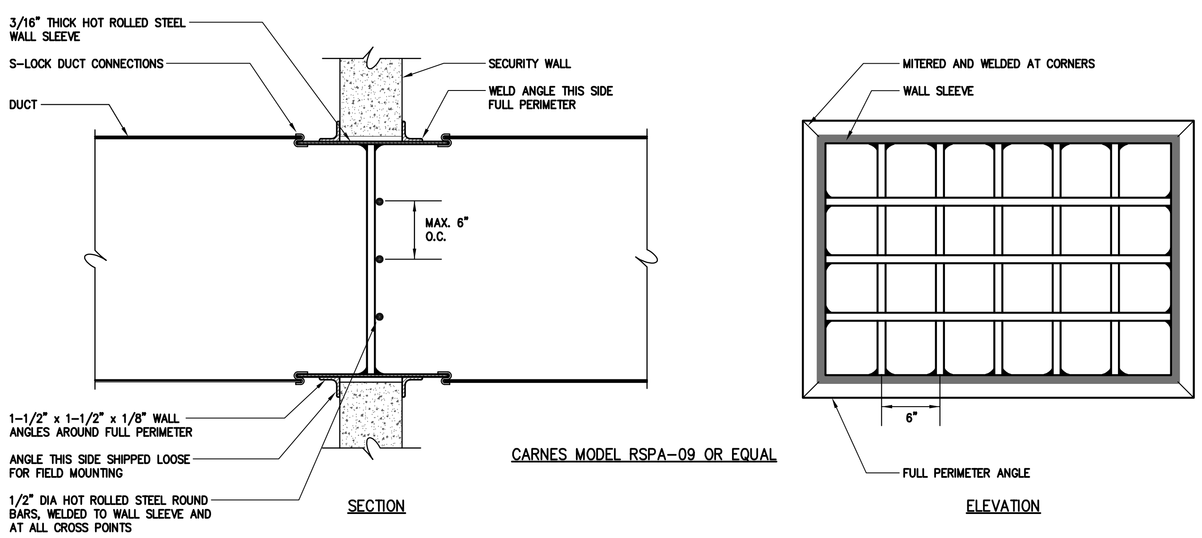

4 / M3.2 WALL SECURITY BARS DETAIL

NO SCALE

NOTE: PAINT ENTIRE ASSEMBLY WITH TWO COATS WHITE PRIMER. PROVIDE AT ALL LOCATIONS WHERE DUCTS PENETRATE SECURITY WALLS

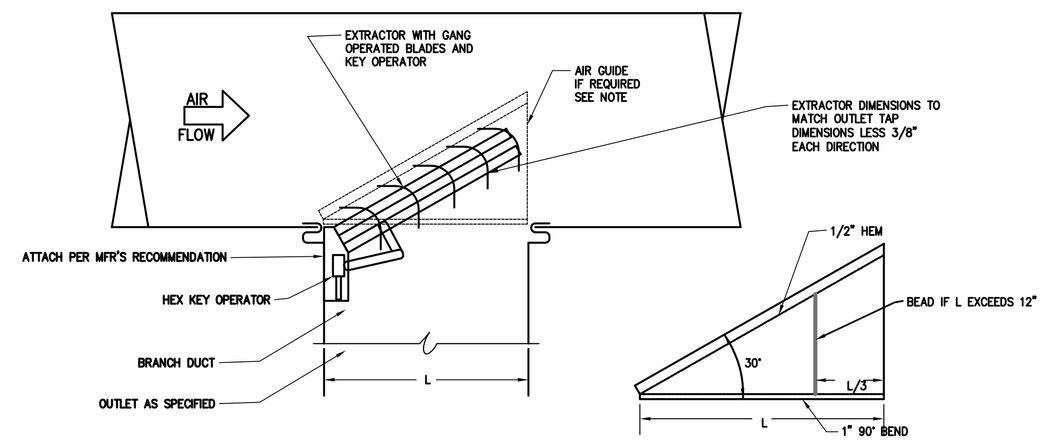

AIR GUIDE – 1 GAUGE HEAVIER THAN TRUNK DUCT. INSTALL 1/2" ABOVE AND/OR BELOW BRANCH TAP IF THE DUCTWALL IS MORE THAN 2" FROM THE BRANCH. ATTACH WITH SM SCREWS OR SPOT WELD 6" O.C. (MIN 2).

5 / M3.2 EXTRACTOR MOUNTING DETAIL

NO SCALE

NOTE: PAINT ENTIRE ASSEMBLY WITH TWO COATS WHITE PRIMER

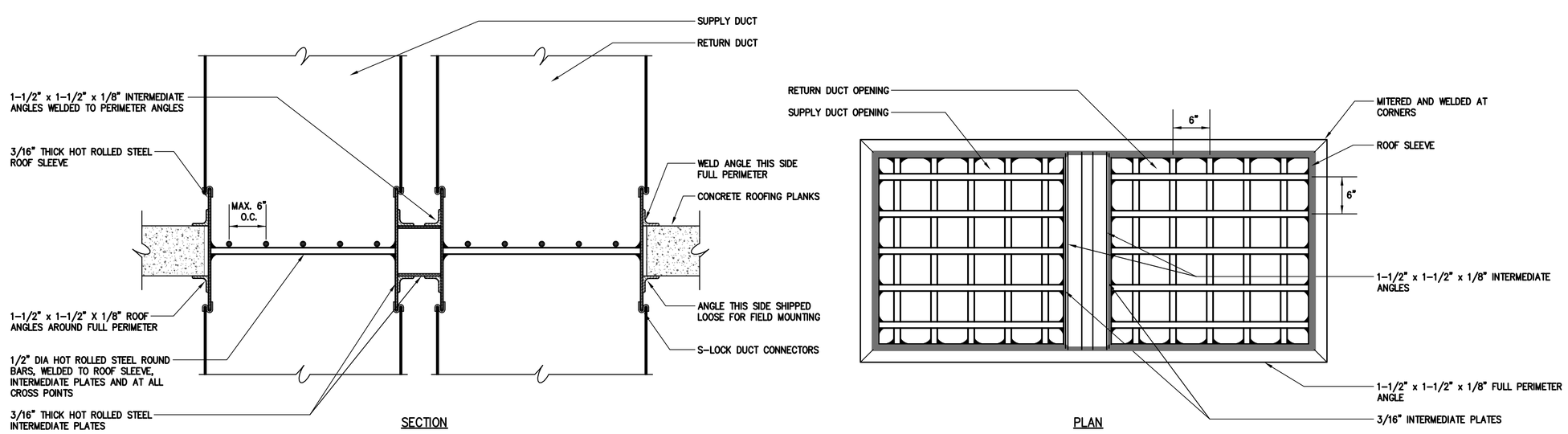

6 / M3.2 ROOF SECURITY BARS DETAIL

NO SCALE

NOTE: PAINT ENTIRE ASSEMBLY WITH TWO COATS WHITE PRIMER. PROVIDE FOR ROOFTOP ON BUILDINGS B, D, AND E. PROVIDE SIMILAR, EXCEPT SINGLE OPENING, FOR EXHAUST FAN ON BUILDING D, B, AND E

© 2007 PRECISION PLANNING, INC.
THESE CONSTRUCTION DOCUMENTS CONSTITUTE THE PROPERTY IN WHOLE OR IN PART, OF INSTRUMENTS OF SERVICE OF PRECISION PLANNING, INC. THESE DOCUMENTS MAY NOT BE REPRODUCED OR CONVEYED IN ANY MANNER WITHOUT THE WRITTEN PERMISSION OF PRECISION PLANNING, INC. THESE DOCUMENTS MAY NOT BE REPRODUCED OR CONVEYED IN ANY MANNER FOR USE ON ANY PROJECT OTHER THAN THAT FOR WHICH THEY WERE PREPARED, NOR MAY ANY OTHER PROJECTS OTHER THAN THAT FOR WHICH THEY WERE PREPARED BE DESIGNED WITHOUT THE WRITTEN PERMISSION FROM AND DUE COMPENSATION TO PRECISION PLANNING, INC.

STAMP

GEORGIA REGISTERED 15640 PROFESSIONAL ENGINEER CARLEY V. SPENCER

Precision Planning, Inc.
planners, engineers, architects & surveyors
P.O. Box 2210
400 Pike Boulevard
Lawrenceville, GA 30046-2210
(770) 963-8000 or (770) 962-8000
(Fax) (770) 822-5990

PROJECT

JACKSON COUNTY JAIL
555 GENERAL JACKSON DRIVE
JEFFERSON, GEORGIA 30549

SHEET TITLE

DETAILS

DESIGN	DRAWN	CHECKED
CDL	FJL	CDL

RELEASE

DATE	NO	DESCRIPTION
12/21/07		MECHANICAL / ELECTRICAL BID PACKAGE RELEASE
01-04-08	0	MECH./ELEC. BID PACKAGE ADDENDUM #1

DATE	PROJ. NUMBER	CAD FILE NAME	FILE NUMBER
10-31-07	A06136	.	.

M3.2
0