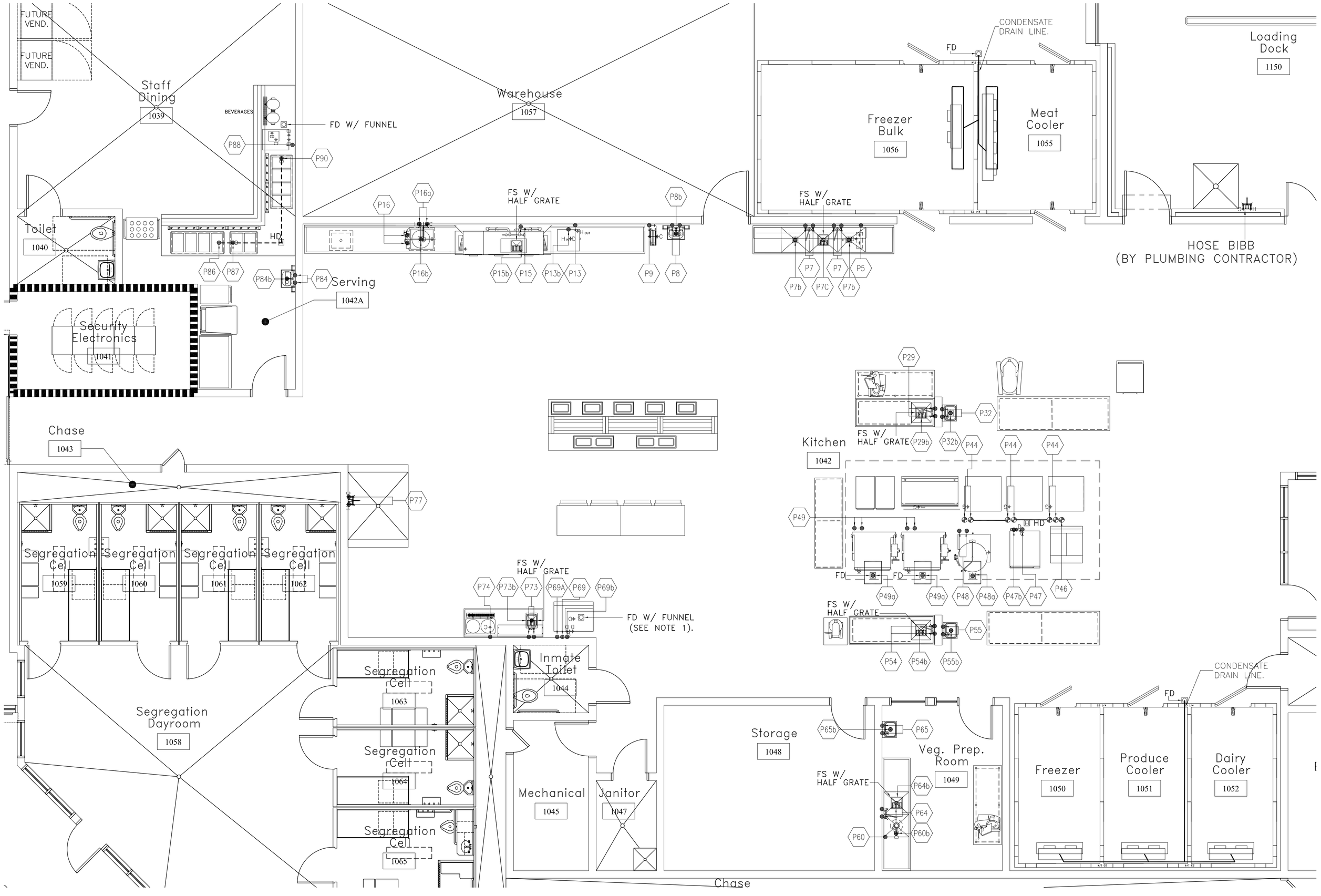

1 K3.1 KITCHEN EQUIPMENT PLUMBING CONNECTION PLAN

SCALE: 1/4" = 1'-0"

PLUMBING CONNECTION NOTES:

P5 – (SINK HEATER) 3/4" INDIRECT WASTE, EXTEND TO FLOOR SINK.
P8 – (HAND SINK) 1/2" CW. & HW. OUT OF WALL 16" AFF. EXTEND TO FAUCET INLET 39" AFF.
P8b – (HAND SINK) 1–1/4" WASTE EXTEND TO FLOOR SINK.
P7 – (POT & PAN SINK) (2) 1/2" CW. & HW., OUT OF WALL 16" AFF. EXTEND TO FAUCET INLET 39"AFF.
P7b – (POT & PAN SINK WASTE) 2" WASTE.
P7c – (POT & PAN SINK WASTE) 2" WASTE EXTEND TO FS.
P9 – (HOSE REEL) 1/2" CW. & HW. OUT OF WALL 16" AFF. REDUCE TO 3/8" REFER TO HOSE REEL INSTALLATION DETAIL ON THIS PAGE.
P13 – (BOOSTER HEATER) 3/4" HW. (140°) OUT OF WALL 8" AFF. CONNECT TO INLET, 4" AFF.
P13b– (BOOSTER HEATER WASTE) 3/4" HW (180°) OUTLET. EXTEND TO INLET ON ITEM #15.
P15 – (DISH WASHER) 3/4" HW, (180°) FROM CONNECTION P13a TO INLET 64" AFF.
P15b– (DISHWASHER WASTE) 2" WASTE, 8" AFF. EXTEND TO FLOOR SINK.
P16 – (COLLECTOR) 3/4" CW & HW. OUT OF WALL 16" AFF., REDUCE TO 1/2" AT INLET.
P16a– (PRE–RINSE FAUCET) 1/2" CW. & HW., OUT OF WALL 16" AFF. EXTEND TO FAUCET INLET 39" AFF.
P16b– (COLLECTOR WASTE) 2" WASTE EXTEND TO FS.
P19 – (SOILED DISH TABLE) 1/2" CW. & HW. OUT OF WALL 16" AFF., EXTEND TO FAUCET INLETS 39" AFF.
P29 – (WORK TABLE W/SINK) 1/2" CW. & HW. OUT OF WALL 16" AFF.
P29b– (WORK TABLE W/SINK WASTE) 1–1/2" WASTE EXTEND TO FS.
P32 – (HAND SINK) 1/2" CW. & HW. OUT OF WALL 16" AFF. EXTEND TO FAUCET INLET 39" AFF.
P32b– (HAND SINK) 1–1/4" WASTE EXTEND TO FLOOR SINK.
P44 – (CONVECTION OVEN) (2) 3/4" GAS OUT OF WALL 16" AFF. EXTEND TO INLET.
P46 – (6 BURNER RANGE) 1–1/2" GAS OUT OF WALL 16" AFF. EXTEND TO INLET.
P47 – (STEAMER, CONVECTION) 3/4" CW., STUB–UP TO EXTEND TO STEAMER.
P47b– (STEAMER, CONVECTION DRAIN) 2–1/2" WASTE EXTEND TO HUB–DRAIN.
P48 – (60 GAL. KETTLE) 1/2" CW. & HW. STUB–UP TO CONNECT W/ TERMINAL, 2" WASTE EXTEND TO FS, 3/4" GAS STUB–UP TO CONNECT W/ TERMINAL.
P48a– (FLOOR TROUGH) 3" WASTE EXTEND TO FS.
P49 – (TILT SKILLET) 1/2" CW. & HW. STUB–UP TO EXTEND TO INLETS ON FILL FAUCET, 14" AFF.
P49a– (FLOOR TROUGH) 3" WASTE EXTEND TO FS.
P54 – (MEAT PREP TABLE W/SINK) 1/2" CW. & HW. OUT OF WALL 16" AFF. EXTEND TO FAUCET INLET 39" AFF.
P54b– (MEAT PREP TABLE) 1–1/2" INDIRECT WASTE, EXTEND TO FLOOR SINK.
P55 – (HAND SINK) 1/2" CW. & HW. OUT OF WALL 16" AFF. EXTEND TO FAUCET INLET 39" AFF.
P55b– (HAND SINK) 1–1/4" WASTE EXTEND TO FLOOR SINK.
P60 – (DISPOSER) 1/2" HW OUT OF WALL 16" AFF. EXTEND THROUGH SOLENIOD VALVE AND VACUUM BREAKER AND CONNECT TO INLET ON DISPOSER. (SEE DETAIL, THIS PAGE)
P60b– (DISPOSER WASTE) 2" INDIRECT WASTE, EXTEND TO FLOOR SINK.
P64 – (VEG PREP SINK) 1/2" CW. & HW. OUT OF WALL 16" AFF. EXTEND TO FAUCET INLET 39" AFF.
P64b– (VEG PREP SINK) 1–1/2" INDIRECT WASTE, EXTEND TO FLOOR SINK
P65 – (HAND SINK) 1/2" CW. & HW. OUT OF WALL 16" AFF. EXTEND TO FAUCET INLET 39" AFF.
P65b– (HAND SINK) 1–1/4" WASTE EXTEND TO FLOOR SINK.
P69 – (ICE MAKER) 1/2" CW. OUT OF WALL 56" AFF. REDUCE TO 3/8" THROUGH WATER FILTER AND CONNECT TO INLET ON ICE MAKER,
P69b– (ICE MAKER) 1/2" WASTE EXTEND TO FLOOR DRAIN.
P69A– (ICE BIN) 1" WASTE, EXTEND TO FLOOR DRAIN.
P73 – (BEV. TABLE) 1/2" CW & HW. OUT OF WALL, 16" AFF. EXTEND TO INLETS ON FAUCET, 39" AFF.
P73b– (BEV TABLE) 1–1/2" INDIRECT WASTE, EXTEND TO FLOOR SINK.
P74 – (COFFEE URN) 1/2" CW OUT OF WALL 48" AFF. EXTEND TO INLET ON COFFEE.
P77 – (HOSE BIBB) 1/2" CW. & HW. OUT OF WALL 16" AFF. REFER TO HOSE BIBB INSTALLATION DETAIL ON THIS PAGE.
P84 – (HAND SINK) 1/2" CW. & HW. OUT OF WALL 16" AFF. EXTEND TO FAUCET INLET 39" AFF.
P84b– (HAND SINK) 1–1/4" WASTE EXTEND TO FLOOR SINK.
P86 – (DROP–IN, COLD PAN) 3/4" WASTE EXTEND TO HD.
P87 – (DROP–IN, COLD PAN) 3/4" WASTE EXTEND TO HD.
P88 – (DISPENSER, ICE/BEVERAGE) 3/4" WASTE EXTEND TO FD.
P90 – (COLD WELL) 3/4" INDIRECT WASTE, EXTEND TO HD.

NOTES:

1– PROJECT PLUMBER TO PROVIDE FD W/ FUNNEL, ALL WASTES (W) OR DRAINS (D) FROM MAKER AND BIN SHALL BE DIRECTED INTO FD WHERE SHOWN ON DRAWINGS.

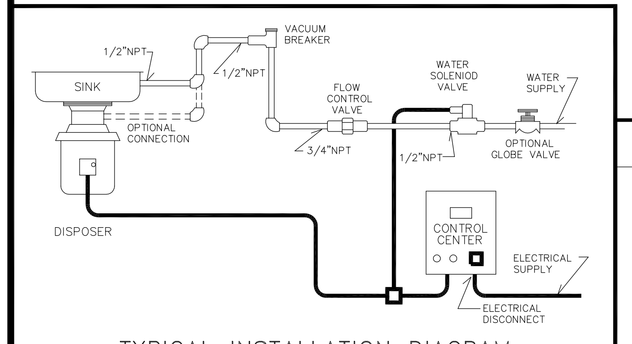

TYPICAL INSTALLATION DIAGRAM

PLUMBING LEGEND & SYMBOLS

CW	COLD WATER
HW	HOT WATER
W	WASTE/DRAIN
FD	FLOOR DRAIN
HD	HUB DRAIN
	FLOOR SINK
G	GAS
S	STEAM
SR	STEAM RETURN
	EXHAUST DUCT
AFF	ABOVE FINISHED FLOOR

HOT WATER REQUIREMENTS

ITEM	DESCRIPTION	GPH
64	VEG. PREP. TBL. W/SINK	41
64&20	WORK TABLE W/SINK	17
19	SOILED DISH TABLE	45
15	DISHWASHER	133
7	POT & PAN SINK	79
	LAV. @ 5 GAL. EA.	15

IT IS THE INTENT OF THIS DRAWING TO SHOW PLUMBING AND MECHANICAL CONNECTION POINTS. FOR FINAL ROUGH–IN DRAWINGS, SEE CONTRACTORS DETAIL SHOP DRAWINGS. ALLOWANCES SHALL BE MADE FOR TRIM, FITTINGS AND ACCESSORIES

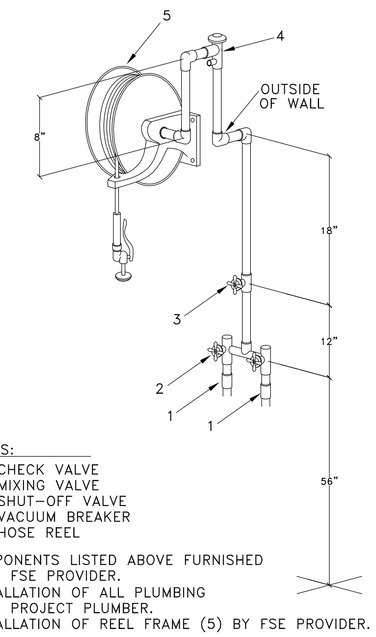

NOTES:
1. CHECK VALVE
2. MIXING VALVE
3. SHUT–OFF VALVE
4. VACUUM BREAKER
5. HOSE REEL

COMPONENTS LISTED ABOVE FURNISHED BY FSE PROVIDER.
INSTALLATION OF ALL PLUMBING BY PROJECT PLUMBER.
INSTALLATION OF REEL FRAME (5) BY FSE PROVIDER.

HOSE REEL DETAIL

NOT TO SCALE

CAMACHO ASSOCIATES, INC.
FOOD FACILITIES DESIGNERS/CONSULTANTS
6765 PEACHTREE INDUSTRIAL BLVD.
SUITE 150, ATLANTA, GEORGIA 30360
(770) 582-1144

Key Plan

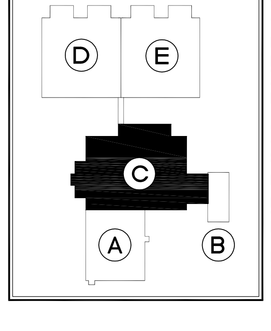

FOR BIDDING PURPOSES ONLY – FOR BIDDING PURPOSES ONLY – FOR BIDDING PURPOSES ONLY – FOR BIDDING PURPOSES ONLY

© 2008 PRECISION PLANNING, INC. ALL RIGHTS RESERVED
THESE CONTRACTORS DOCUMENTS, AND PORTIONS THEREOF, ARE COPYRIGHTED AND PROTECTED REPRODUCTION, IN WHOLE OR IN PART, BY ANY MEANS OF SERVICE, AND INC. SALE PROPERTY OF PRECISION PLANNING, INC. UNLESS OTHERWISE AGREED TO, THEY SHALL NOT BE USED BY OTHERS IN ANY MANNER NOR ARE THEY TO BE USED FOR ANY PURPOSE OTHER THAN THE WORK SPECIFICALLY INDICATED HEREIN WITHOUT THE WRITTEN CONSENT OF, OR COMPENSATION TO PRECISION PLANNING, INC.

FOR BIDDING PURPOSES ONLY

STAMP

Precision Planning, Inc.
planners, engineers, architects & surveyors
P.O. Box 2210
400 Pike Boulevard
Lawrenceville, GA 30046–2210
(770) 338–8000 or (770) 962–8000
(Fax) (770) 822–5990

PROJECT

JACKSON COUNTY JAIL
555 GENERAL JACKSON DRIVE
JEFFERSON, GEORGIA 30549

SHEET TITLE

KITCHEN PLUMBING CONN. PLAN

DESIGN JCC | DRAWN | CHECKED

RELEASE

DATE	NO	DESCRIPTION
02/13/08	9	MASONRY/F.P./KITCHEN BID PACKAGE RELEASE

02-13-08 DATE
A06636 PROJ. NUMBER
CAD FILE NAME
FILE NUMBER

K3.1