RIVERDALE PUBLIC LIBRARY ADDITION

420 Valley Hill Rd, Riverdale, GA 30274

PROJECT TEAM:

Owner
CLAYTON COUNTY LIBRARY SYSTEM
6131 RIVERRDALE ROAD
ATLANTA, GA 30349

ATTN: SCOTT PARHAM
EMAIL:
SCOTT.PARHAM@CLAYTONCOUNTYGA.GOV

Headquarters Library
865 BATTLE CREEK ROAD
JONESBORO, GA 30236

PHONE: (770) 473-3850

Architect
GARDNER SPENCER SMITH TENCH JARBEAU
ARCHITECTS
50 HURT PLAZA SE, SUITE 1100
ATLANTA, GA 30303-1800

ATTN: KEITH SOLOMON
PHONE: (404) 522-8805 EXT. 4
EMAIL: KSOLOMON@GSSTJ.COM

Civil/ Survey
Planners & Engineers Collaborative
LAND PLANNING + LANDSCAPE ARCHITECTURE
CIVIL ENGINEERING + ARBORISTS + SURVEYING
& CONSTRUCTION + WATER RESOURCES
350 RESEARCH COURT STE 200 PEACHTREE
CORNERS, GA 3 P0:0 □79270□ 451-2741
ATTN: Jason P. Baines, P.E., S.E.
PHONE: (404) 771-9106

Structural Engineer
GOODMAN GIANNAVOLA
HINES ENGINEERS
311 14TH STREET
SUITE 2
ATLANTA, GA 30318
GGENGINEERS.COM

Mep Engineer
HAMMOND ENGINEERING, INC
CONSULTING ENGINEERS
6961 PEACHTREE INDUSTRIAL BLVD. #208
NORCROSS, GEORGIA, 30092
TEL: (678)292-6937
NATHANIEL D. HAMMOND P.E.
MECHANICAL/ELECTRICAL ENGINEERS

GENERAL NOTES:

1. DO NOT SCALE DRAWINGS. USE WRITTEN DIMENSIONS ONLY. SUBMIT ANY DISCREPANCIES TO THE ARCHITECT FOR CLARIFICATION PRIOR TO EXECUTION OF THE WORK IN QUESTION.
2. ALL DIMENSIONS ARE TO FACE OF FINISH MATERIAL OR CENTERLINE OF FIXTURE UNLESS CLEARLY SHOWN OR NOTED OTHERWISE.
3. THE CONTRACTOR SHALL BE RESPONSIBLE FOR EXECUTION OF THE WORK IN ACCORDANCE WITH THE DRAWINGS AND SPECIFICATIONS UNLESS WRITTEN NOTIFICATION TO THE CONTRARY IS ISSUED AND SIGNED BY THE OWNER AND/OR ARCHITECT.
4. THE LOCATION OF THE EXISTING UTILITIES AND STRUCTURES SHOWN IN THE DOCUMENTS ARE APPROXIMATE. IT SHALL BE THE RESPONSIBILITY OF THE CONTRACTOR TO VERIFY THE EXISTENCE AND ACTUAL LOCATION OF SUCH, WHETHER SHOWN HEREON OR NOT, PRIOR TO ANY EXCAVATION.
5. ALL VERTICAL AND HORIZONTAL DUCTS, PIPES, CONDUIT, AND SIMILAR ASSEMBLIES IN FINISHED ROOMS SHALL BE ENCLOSED IN A FINISHED CHASE. THE MATERIALS AND FINISHES OF SUCH CHASES SHALL MATCH ADJACENT FINISHED WALLS.
6. FURNISH ACCESS PANELS IN WALLS AND NON-ACCESSIBLE TYPE CEILINGS WHERE SERVICE OR ADJUSTMENT TO MECHANICAL, PLUMBING OR ELECTRICAL EQUIPMENT MAY BE REQUIRED. ACCESS PANELS SHALL BE EQUAL IN FIRE RATING TO SURFACE IN WHICH THEY OCCUR. REFER TO ENGINEERING DRAWINGS FOR LOCATION OF MECHANICAL, PLUMBING AND ELECTRICAL EQUIPMENT.
7. PROVIDE CONTROL JOINTS IN GYPSUM WALL BOARD AS SHOWN IN THE DRAWINGS. OR IF NOT SHOWN, MAXIMUM ALLOWED PER MANUFACTURERS SPECIFICATION.
TIGHTLY SEAL ANY OPENINGS IN FIRE RATED WALLS BY DUCTS, PIPES, CONDUIT, STRUCTURAL MEMBERS, OR ANY OTHER MATERIALS. OPENINGS IN METAL STUD PARTITIONS SHALL BE SEALED WITH FIRE SAFING.
9. GYPSUM WALLBOARD IN ROOMS SUBJECT TO MOISTURE ACCUMULATION (TOILETS, SHOWERS, JANITORS CLOSETS, ETC.) SHALL BE MOISTURE RESISTANT TYPE.
10. ALL GYPSUM WALL BOARD MATERIAL IN FIRE RATED ASSEMBLIES SHALL BE FIRE RESISTIVE UL CLASSIFIED MATERIAL APPLIED IN STRICT COMPLIANCE TO THE APPLICABLE FIRE TEST DESIGN WITH JOINTS ON OPPOSITE WALL FACES STAGGERED. FASTENERS SHALL BE OF APPROVED TYPE AND INSTALLED IN ACCORDANCE WITH APPLICABLE FIRE TEST. ALL WALLBOARD JOINTS IN ALL PARTITION WALLS SHALL BE TAPED AND FINISHED WITH JOINT COMPOUND, INCLUDING THOSE ABOVE THE FINISHED CEILING. PENETRATIONS FOR PIPES, CONDUIT, FRAMING MEMBERS, DUCTS, ETC. SHALL BE FRAMED WITH RUNNER CHANNELS AND TIGHTLY SEALED. SUCH PENETRATIONS SHALL BE TIGHTLY PACKED WITH MINERAL FIBER SAFING INSULATION.
11. IMMEDIATELY NOTIFY ARCHITECT IN WRITING IF ANY OMISSION, DISCREPANCY, AMBIGUITY OR ERROR IN THE CONTRACT DOCUMENTS BE DISCOVERED OR IF ANY DOUBT AS TO THE MEANING OR INTENT THEREOF SHOULD ARISE. CLARIFICATION WILL BE MADE BY REVISION TO THE CONTRACT DOCUMENTS.
12. ALL ATTACHMENTS, SCREWS & BOLTS BETWEEN STRUCTURAL STEEL AND TREATED WOOD, BLOCKING AND NAILERS SHALL BE GALVANIZED.
13. PAINT ALL EXPOSED DUCTWORK, PIPING, CONDUIT, ETC. PER MFG. RECOMMENDATION.
14. SHOP DRAWINGS AND SAMPLES SHALL BE SUBMITTED FOR APPROVAL TO THE INTERIOR DESIGNER/ ARCHITECT PRIOR TO CONSTRUCTION AND/OR PURCHASE OF MATERIALS DESCRIBING THE OVERALL SCOPE AS WELL AS COMPLETE DETAILS OF WORK TO BE PERFORMED. ALL FABRICATION SHALL BE BASED ON ACTUAL FIELD DIMENSIONS.
15. CONTRACTOR SHALL OBTAIN ALL PERMITS AND INSPECTION REQUIRED BY LOCAL AND STATE AND LOCAL CODES. ALL RECOMMENDATIONS AND REQUIREMENTS OF THE STATE CODES AND NFPA 90-A SHALL BE FOLLOWED.
16. VISIT THE JOB SITE AND CHECK ALL EXISTING CONDITIONS PRIOR TO SUBMITTING A PRICE FOR PERFORMING ANY WORK.
17. CONTRACTOR TO VERIFY WITH THE OWNER AND/OR OWNER'S REPRESENTATIVES ALL PLUMBING AND ELECTRICAL REQUIREMENTS FOR EQUIPMENT PROVIDED BY THE OWNER.
18. INTERIOR CONTRACT DOCUMENTS HOLD PRECEDENCE OVER ENGINEER DOCUMENTS FOR LOCATIONS, MOUNTING HEIGHTS, ETC. IF THERE IS A CONFLICT BETWEEN DOCUMENTS, THE CONTRACTOR IS TO NOTIFY THE ARCHITECT IMMEDIATELY FOR DIRECTION.

REFERENCED CODES

INTERNATIONAL BUILDING CODE (IBC): 2018 EDITION WITH GA AMENDMENTS.

NATIONAL ELECTRIC CODE (NEC): 2020 EDITION

INTERNATIONAL FUEL GAS CODE (IFGC): 2018 EDITION WITH GA AMENDMENT.

INTERNATIONAL MECHANICAL CODE (IMC): 2018 EDITION WITH GA AMENDMENTS

INTERNATIONAL PLUMBING CODE (IPC): 2018 EDITION WITH GA AMENDMENTS

INTERNATIONAL ENERGY CONSERVATION CODE (IECC): 2015 EDITION WITH GA SUPPLEMENTS AND AMENDMENTS

INTERNATIONAL FIRE CODE (IFC): 2018 EDITION

GEORGIA ACCESSIBILITY CODE - GAC 120-3-20 - 2015 EDITION

NATIONAL FIRE PROTECTION ASSOCIATION 101 LIFE SAFETY CODE (LSC): 2018 EDITION

U.S. DEPT. OF JUSTICE A.D.A. STANDARDS FOR ACCESSIBLE DESIGN (ADA): 2010 EDITION

CHAPTER 120-3-3 RULES AND REGULATIONS FOR THE STATE MIN. FIRE STANDARDS IN GA

VICINITY MAP

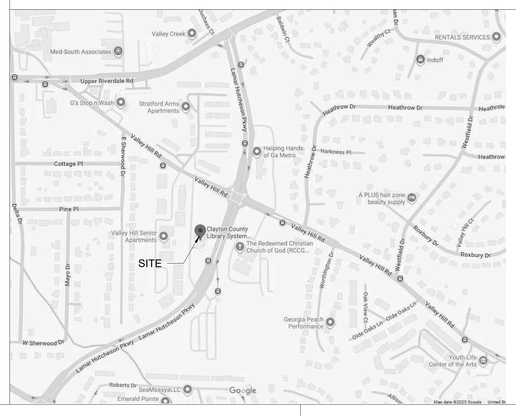

SYMBOLS LEGEND

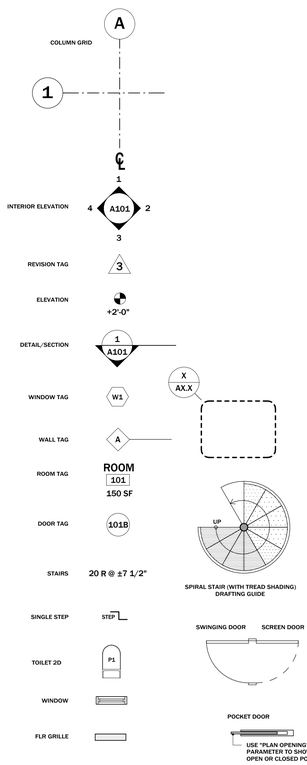

ADDITION

OCCUPANCY CLASSIFICATION	
OCCUPANCY GROUP:	ASSEMBLY A-3 - IBC 2018
	ASSEMBLY - NFPA 101 2018
OCCUPANCY LOAD:	NEW ADDITION = 182
	EXISTING BUILDING = 207 PERSONS
	TOTAL = 389 PERSONS
CONSTRUCTION CLASSIFICATION	
TYPE OF CONSTRUCTION	TYPE V-B - IBC 2018, TYPE V(000) - NFPA 101 2018
SPRINKLERED (YES OR NO)	YES
BUILDING AREA	
NEW ADDITION	3576 S.F.
NEW EXTERIOR CANOPY & RAMP	833 S.F.
EXISTING BUILDING	11482 S.F.
TOTAL ENCLOSED BUILDING AREA (NEW + EXISTING)	15508 S.F.
BUILDING HEIGHT	
NUMBER OF STORIES:	1
BUILDING HEIGHT (FT.):	22'-0"
SCOPE OF BUILDING PERMIT - [X] APPLICABLE BOX	

INDEX OF DRAWINGS

NO.	SHEET	BID ISSUE
GENERAL		
G0.00	TITLE SHEET	03/06/26
LS0.1	LIFE SAFETY PLAN	08/29/25
CIVIL		
C0.00	CIVIL COVER SHEET	06/20/25
C1.00	BOUNDARY & TOPOGRAPHIC SURVEY	10/23/24
C1.01	BOUNDARY & TOPOGRAPHIC SURVEY	10/23/24
C2.00	CIVIL DEMOLITION PLAN	06/20/25
C3.00	CIVIL SITE PLAN	03/26/26
C4.00	GRADING AND EROSION PLAN	06/20/25
C4.01	SCALED GRADING AND EROSION PLAN	06/20/25
C5.00	UTILITY PLAN	06/20/25
C7.00	PIPE PROFILES	06/20/25
C9.00	EROSION & SEDIMENT CONTROL DETAILS	06/20/25
C9.01	CONSTRUCTION DETAILS	02/11/26
ARCHITECTURAL		
A0.01	CODE ANALYSIS	08/29/25
A0.60	PARTITION DETAILS	08/29/25
A0.62	WALL DETAILS	08/29/25
A1.11	OVERALL FLOOR PLAN	08/29/25
A1.20	DIMENSION PLAN - ADDITION	03/06/26
A1.31	REFLECTED CEILING PLAN - ADDITION	08/29/25
A1.40	ROOF PLAN	08/29/25
A1.50	ENLARGED FLOOR PLAN - ADDITION	08/29/25
A1.60	ENLARGED PLANS - TOILETS	03/06/26
A1.61	INTERIOR ELEVATIONS - TOILETS	08/29/25
A2.00	EXTERIOR ELEVATIONS	03/06/26
A2.01	BUILDING SECTION	08/29/25
A3.00	WALL SECTIONS	08/29/25
A3.50	SECTION DETAILS - ROOF & PARAPET	11/20/25
A3.51	PLAN & SECTION - RAMP & STAIRS	08/29/25
A4.00	DOOR & WINDOW SECHEDULE & ELEVATIONS	08/29/25
A4.30	HEAD, JAMB & SILL DETAILS	08/29/25
A5.00	INTERIOR FINISH PLAN, SCHEDULE, & NOTES	11/20/25
A6.00	INTERIOR ELEVATIONS	08/29/25
A7.00	INTERIOR DETAILS - CASEWORK	08/29/25
STRUCTURAL		
S0.10	GENERAL NOTES	03/06/26
S1.10	PLANS	06/23/25
S2.10	FOUNDATION SECTIONS & DETAILS	06/23/25
S3.10	SECTIONS & DETAILS	06/23/25
S4.10	FRAME ELEVATIONS & DETAILS	06/23/25
MECHANICAL		
M0.01	MECHANICAL GENERAL NOTES & LEGEND	06/10/25
M0.02	MECHANICAL SCHEDULES, CONTROLS, & SPECIFICATIONS	11/20/25
M1.10	MECHANICAL FLOOR PLAN	06/10/25
M1.20	MECHANICAL ROOF PLAN	06/10/25
M5.00	MECHANICAL DETAILS	06/10/25
ELECTRICAL		
E0.01	ELECTRICAL GENERAL NOTES, LEGEND, & DESIGN INTENT	06/10/25
E0.02A	HILTI FIRE STOP DETAILS	06/10/25
E0.02B	HILTI FIRE STOP DETAILS	06/10/25
E0.02C	HILTI FIRE STOP DETAILS	06/10/25
E0.02D	HILTI FIRE STOP DETAILS	06/10/25
E0.02E	HILTI FIRE STOP DETAILS	06/10/25
E0.03	LIGHTING FIXTURE SCHEDULE	03/06/26
E1.00	ELECTRICAL SITE PLAN	06/10/25
E1.10	ELECTRICAL FLOOR POWER PLAN	03/06/26
E1.20	ELECTRICAL ROOF POWER PLAN	06/10/25
E1.30	ELECTRICAL LIGHTING CEILING PLAN	06/10/25
E6.00	ELECTRICAL RISER DIAGRAM	11/20/25
PLUMBING		
P0.01	PLUMBING GENERAL NOTES, LEGEND, AND DESIGN LEGEND	11/20/25
P0.02	PLUMBING DETAILS	11/20/25
P1.10	FLOOR PLAN - PLUMBING DRAINAGE	11/20/25
P1.20	FLOOR PLAN - PLUMBING DOMESTIC WATER	11/20/25
P1.30	ROOF PLAN - PLUMBING	11/20/25
P1.40	ISOMETRIC RISER - PLUMBING DOMESTIC WATER	11/20/25
P1.41	ISOMETRIC RISER - PLUMBING DRAINAGE	11/20/25
FIRE PROTECTION		
FP0.01	FIRE PROTECTION GENERAL NOTES, LEGEND, & DESIGN INTENT	11/20/25
FP1.10	FLOOR PLAN - FIRE PROTECTION	11/20/25
FP1.11	FIRE PROTECTION FLOOR PLAN - EXISTING BUILDING	06/10/25

NOTES

CLAYTON COUNTY LIBRARY SYSTEM

RIVERDALE LIBRARY ADDITION

420 Valley Hill Rd, Riverdale, GA 30274

© 2025. THESE DOCUMENTS REMAIN THE PROPERTY OF THE ARCHITECT AND MAY NOT BE USED OR REPRODUCED WITHOUT WRITTEN PERMISSION.

RELEASED FOR CONSTRUCTION

Revisions

No.	Date	Description
	8/29/25	Issued for Permit
2	3/6/26	Revision 2

GEORGIA REGISTERED No. 3072 PROFESSIONAL ARCHITECT JOHN GLENN GARDNER JR.

Gardner Spencer Smith Tench & Jarbeau
A Professional Corporation
for the Practice of Architecture
www.gsstj.com

Tower Place Building,
3340 Peachtree Road, N.E.
Suite 1800
Atlanta, Georgia 30326
404.522.8805
404.521.2118 (f)

PROJECT NO.
24105

SHEET TITLE
TITLE SHEET

SHEET NO.
G0.00

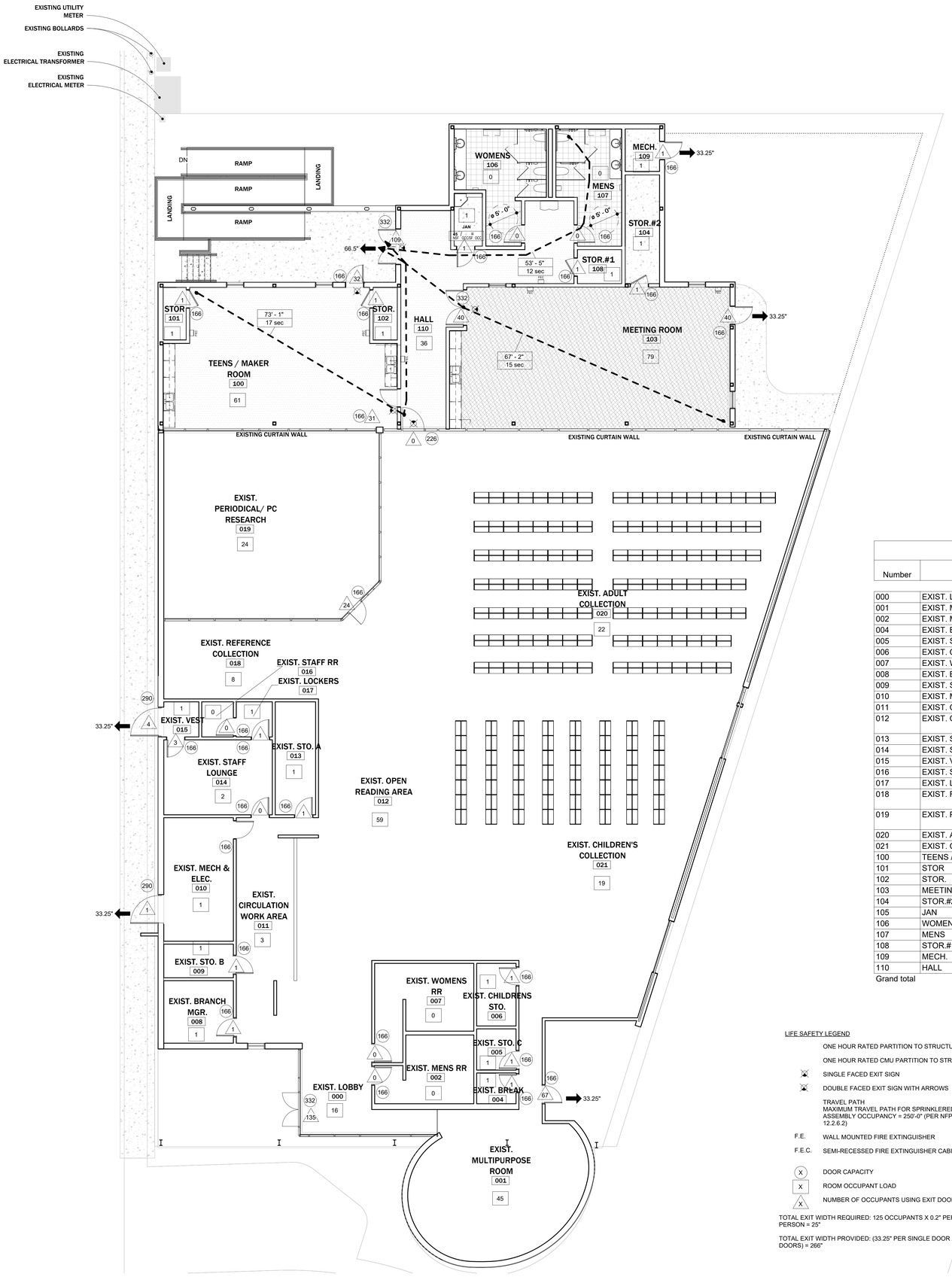

OCCUPANCY SCHEDULE					
Number	Name	Area	Occupancy	Occupant Load Factor	No. Occupants
000	EXIST. LOBBY	232 SF	ASSEMBLY	15	16
001	EXIST. MULTIPURPOSE ROOM	662 SF	ASSEMBLY	15	45
002	EXIST. MENS RR	175 SF	N/A		
004	EXIST. BREAK	36 SF	STORAGE	300	1
005	EXIST. STO. C	49 SF	STORAGE	300	1
006	EXIST. CHILDRENS STO.	74 SF	STORAGE	300	1
007	EXIST. WOMENS RR	226 SF	N/A		
008	EXIST. BRANCH MGR.	131 SF	BUSINESS	150	1
009	EXIST. STO. B	70 SF	STORAGE	300	1
010	EXIST. MECH & ELEC.	258 SF	STORAGE	300	1
011	EXIST. CIRCULATION WORK AREA	378 SF	BUSINESS	150	3
012	EXIST. OPEN READING AREA	2953 SF	READING ROOM	50	60
013	EXIST. STO. A	137 SF	STORAGE	300	1
014	EXIST. STAFF LOUNGE	244 SF	BUSINESS	150	2
015	EXIST. VEST	37 SF	BUSINESS	150	1
016	EXIST. STAFF RR	33 SF	N/A		
017	EXIST. LOCKERS	38 SF	STORAGE	300	1
018	EXIST. REFERENCE COLLECTION	368 SF	READING ROOM	50	8
019	EXIST. PERIODICAL/ PC RESEARCH	1192 SF	READING ROOM	50	24
020	EXIST. ADULT COLLECTION	2163 SF	STACKS	100	22
021	EXIST. CHILDREN'S COLLECTION	1831 SF	STACKS	100	19
100	TEENS / MAKER ROOM	911 SF	ASSEMBLY	15	61
101	STOR	36 SF	STORAGE	300	1
102	STOR.	38 SF	STORAGE	300	1
103	MEETING ROOM	1181 SF	ASSEMBLY	15	79
104	STOR.#2	112 SF	STORAGE	300	1
105	JAN	45 SF	STORAGE	300	1
106	WOMENS	234 SF	N/A		
107	MENS	200 SF	N/A		
108	STOR.#1	45 SF	STORAGE	300	1
109	MECH.	44 SF	STORAGE	300	1
110	HALL	529 SF	ASSEMBLY	15	36
Grand total					390

LIFE SAFETY LEGEND

- ONE HOUR RATED PARTITION TO STRUCTURE
- ONE HOUR RATED CMU PARTITION TO STRUCTURE
- SINGLE FACED EXIT SIGN
- DOUBLE FACED EXIT SIGN WITH ARROWS
- TRAVEL PATH MAXIMUM TRAVEL PATH FOR SPRINKLERED ASSEMBLY OCCUPANCY = 250'-0" (PER NFPA 101 12.2.6.2)
- F.E. WALL MOUNTED FIRE EXTINGUISHER
- F.E.C. SEMI-RECESSED FIRE EXTINGUISHER CABINET
- (X) DOOR CAPACITY
- [X] ROOM OCCUPANT LOAD
- X NUMBER OF OCCUPANTS USING EXIT DOOR

TOTAL EXIT WIDTH REQUIRED: 125 OCCUPANTS X 0.2" PER PERSON = 25"

TOTAL EXIT WIDTH PROVIDED: (33.25" PER SINGLE DOOR X 8 DOORS) = 266"

OCCUPANCY & CLASSIFICATION AREAS	
OCCUPANCY GROUP	ASSEMBLY (A-3)
CALCULATED OCCUPANT LOAD	
FIRST FLOOR AREA	15,058 SF
TOTAL BUILDING FLOOR AREA	15,058 SF
EXISTING LIBRARY	208
ADDITION	182

1 LIFE SAFETY PLAN1

1/4" = 1'-0"

CLAYTON COUNTY LIBRARY SYSTEM

RIVERDALE LIBRARY ADDITION

420 Valley Hill Rd, Riverdale, GA 30274

© 2025 - THESE DOCUMENTS REMAIN THE PROPERTY OF THE ARCHITECT AND MAY NOT BE USED OR REPRODUCED WITHOUT WRITTEN PERMISSION.

RELEASED FOR CONSTRUCTION

Revisions

No.	Date	Description
	8/29/25	Issued for Permit

GEORGIA REGISTERED No. 3072 PROFESSIONAL ARCHITECT JOSEPH GLENN GARDNER, JR.

Gardner Spencer Smith Tench & Jarbeau
A Professional Corporation for the Practice of Architecture
www.gsstj.com

Tower Place Building,
3340 Peachtree Road, N.E.
Suite 1800
Atlanta, Georgia 30326
404.522.8805
404.521.2118 (f)

PROJECT NO.
24105

SHEET TITLE
LIFE SAFETY PLAN

SHEET NO.
LS0.1

This drawing is the property of Planners and Engineers Collaborative and is not to be copied in whole or in part. It is not to be used on any other project and is to be returned upon request. © Planners and Engineers Collaborative

RIVERDALE LIBRARY EXPANSION

420 VALLEY HILL RD
RIVERDALE, GA 30274

FOR

GARDNER SPENCER SMITH TENCH & JARBEAU, P.C.

3340 PEACHTREE RD NE,SUITE 1800
ATLANTA, GA 30326
PHONE: 404.522.8805

PREPARED BY:

Planners & Engineers Collaborative+

LAND PLANNING + LANDSCAPE ARCHITECTURE + CIVIL ENGINEERING
ARBORISTS + SURVEYING & CONSTRUCTION + WATER RESOURCES

350 RESEARCH COURT STE 200 PEACHTREE CORNERS, GA 30092 P: (770) 451-2741

GENERAL NOTES:

1. PRIOR TO LAND DISTURBING AND/OR CONSTRUCTION ACTIVITIES, THE CONTRACTOR SHALL SCHEDULE A PRE-CONSTRUCTION MEETING WITH THE AREA EROSION CONTROL / SITE DEVELOPMENT INSPECTOR.
2. IF THE CONTRACTOR, DURING THE COURSE OF THE WORK, FINDS ANY DISCREPANCIES BETWEEN THE PLANS AND THE PHYSICAL CONDITIONS OF THE LOCALITY, OR ANY ERRORS OR OMISSIONS IN THE PLANS OR IN THE LAYOUT AS GIVEN BY THE ENGINEER, IT SHALL BE HIS DUTY TO IMMEDIATELY INFORM THE ENGINEER, IN WRITING, AND THE ENGINEER WILL PROMPTLY VERIFY THE SAME. ANY WORK DONE AFTER SUCH A DISCOVERY, UNTIL AUTHORIZED, WILL BE AT THE CONTRACTOR'S RISK.
3. THE EXISTING UTILITIES SHOWN ON THE PLANS HAVE BEEN PREPARED FROM THE INFORMATION AVAILABLE TO THE ENGINEER AND MAY NOT BE ACCURATE TO EXTENT OR LOCATIONS. PRIOR TO BEGINNING ANY WORK, THE CONTRACTOR SHALL NOTIFY UTILITIES AND THEN MARK OR REMARK THEIR FACILITIES.
4. THE CONTRACTOR SHALL PRESERVE AND PROTECT ALL EXISTING VEGETATION WHICH DOES NOT UNREASONABLY INTERFERE WITH CONSTRUCTION.
5. THE CONTRACTOR SHALL CAREFULLY PRESERVE BENCH MARKS, REFERENCE POINTS AND STAKES.
6. THE CONTRACTOR SHALL OBTAIN ALL REQUIRED PERMITS AND LICENSES FOR EXECUTION OF ALL MATERIALS. THE EXECUTION OF THE WORK SHALL BE IN ACCORDANCE WITH THE STATE AND LOCAL CODES, RULES, AND REGULATIONS.
7. TESTING SHALL BE DONE BY THE CONTRACTOR UNLESS OTHERWISE NOTED.
8. SHORING SHALL BE DONE AS NECESSARY FOR THE PROTECTION OF THE WORK AND FOR THE SAFETY OF PERSONNEL. SHORING SHALL BE IN ACCORDANCE WITH SECTION 7 OF THE MANUAL OF ACCIDENT PROTECTION IN CONSTRUCTION AS PUBLISHED BY THE ASSOCIATED GENERAL CONTRACTORS OF AMERICA, OSHA, AND THE LOCAL REGULATIONS.
9. ANY AND ALL WALLS SHOWN HEREIN ARE FOR LAYOUT PURPOSES ONLY. WALL STRUCTURAL DESIGN, DETAILS, CALCULATIONS, APPROVALS, PERMITS, FEES, INSPECTIONS AND CERTIFICATIONS REQUIRED BY THE GOVERNING AUTHORITY SHALL BE PROVIDED BY OTHERS. CONTRACTOR SHALL INSTALL FALL PROTECTION RAIL SYSTEM(s) FOR ALL WALLS 30 INCHES IN HEIGHT OR GREATER UNLESS OTHERWISE SPECIFIED BY STATE AND/OR LOCAL CODES, RULES, OR REGULATIONS. FALL PROTECTION RAIL SYSTEM(s) SHALL BE IN ACCORDANCE WITH OSHA STANDARD 1926, SUBPART M - FALL PROTECTION.
10. ALL STAIRWAYS HAVING MORE THAN THREE (3) RISERS ABOVE A FLOOR OR GRADE SHALL BE EQUIPPED WITH HANDRAILS LOCATED NOT LESS THAN 34 INCHES (34") NOR MORE THAN 38 INCHES (38") ABOVE THE LEADING EDGE OF A TREAD. EXCEPTION: HANDRAILS THAT FORM PART OF A GUARDRAIL MAY BE 42 INCHES (42") HIGH.
11. ALL WALL TOPS TO BE SIX INCHES (6") ABOVE GRADE UNLESS OTHERWISE NOTED.
12. MAXIMUM CUT OR FILL SLOPE IS 2H:1V UNLESS OTHERWISE SPECIFIED. SLOPES EQUAL TO OR STEEPER THAN 2.5H:1V AND WITH A HEIGHT OF 10' OR GREATER SHALL BE STABILIZED WITH APPROPRIATE MATTING OR BLANKETS.

SITE INFORMATION

1. TOTAL ONSITE AREA: 2.383 ACRES / TOTAL AREA DISTURBED 0.63 ACRES / TOTAL IMPERVIOUS AREA 4750 SF OR .11 ACRES.
2. BOUNDARY & TOPOGRAPHIC INFORMATION PROVIDED BY PLANNERS & ENGINEERS COLLABORATIVE, DATED 10/23/2024.
3. THE FEDERAL EMERGENCY MANAGEMENT AGENCY FLOOD INSURANCE RATE MAP FOR CLAYTON COUNTY, GEORGIA AND INCORPORATED AREAS, COMMUNITY PANEL NUMBER(S) 13063C0059F. EFFECTIVE DATE 12/18/2024 WAS EXAMINED AND NO PORTION OF THE PROPERTY SHOWN HEREIN WAS FOUND TO FALL WITHIN A DESIGNATED FLOOD ZONE "A" (AREAS OF 100-YEAR FLOOD) OR SPECIAL FLOOD HAZARD ZONE (AREAS OF 500-YEAR FLOOD).
4. THERE ARE NO STATE WATERS LOCATED ON OR WITHIN 200 FEET OF THE SITE.
5. THERE ARE NO KNOWN WETLANDS ON THIS SITE
6. THE ORTHOMETRIC HEIGHTS (ELEVATIONS AND CONTOURS) SHOWN HEREON WERE DETERMINED BY A COMBINATION OF FIELD RUN SURVEY BY PLANNERS & ENGINEERS COLLABORATIVE, DATED 10/23/2024 AND CLAYTON COUNTY GIS.

SITE DATA

ADDRESS: 420 VALLEY HILL RD
RIVERDALE, GA 30274

SITE AREA: 2.383 AC
ZONING: C
DISTRICT: 13
LAND LOT: 150

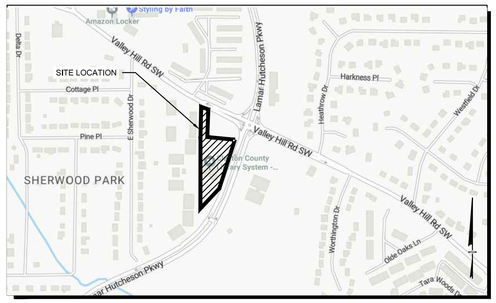

SITE LOCATION MAP
NOT TO SCALE

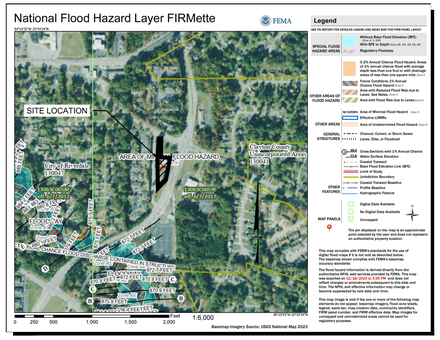
National Flood Hazard Layer FIRMette
FEMA
Legend
SITE LOCATION
AREA OF MINIMAL FLOOD HAZARD
Clayton County
Unincorporated Areas
Lake Edwards
Lake Spivey
Lake Harbin
Lake Shelley
Lake Ellenwood
Lake Ellenwood Dam
Lake Spivey Dam
Lake Harbin Dam
Lake Shelley Dam

This drawing is the property of Planners and Engineers Collaborative and is not to be copied in whole or in part. It is not to be used on any other project and is to be returned upon request. © Planners and Engineers Collaborative

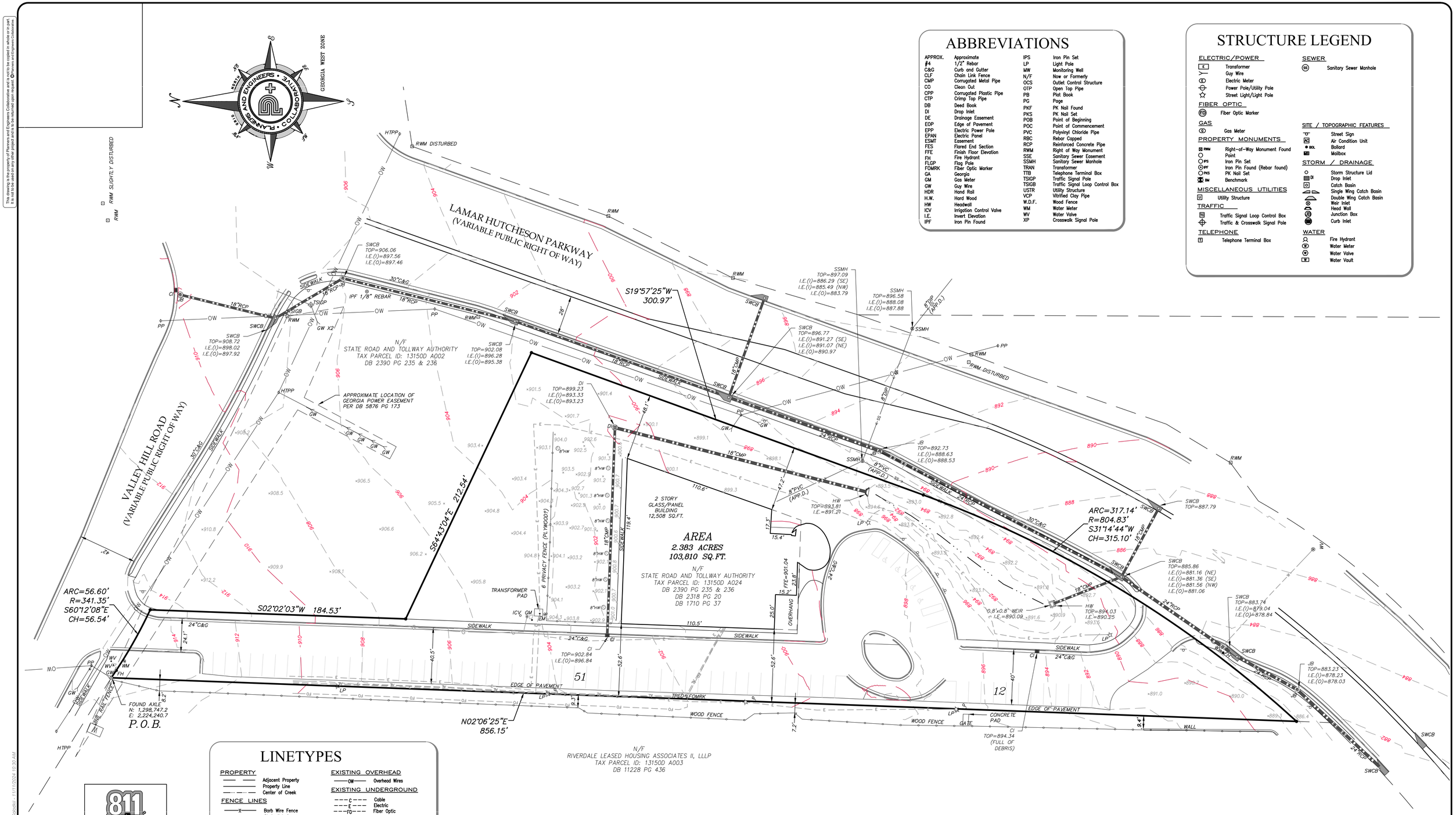

ABBREVIATIONS

APPROX.	Approximate	IPS	Iron Pin Set
#4	1/2" Rebar	LP	Light Pole
C&G	Curb and Gutter	MW	Monitoring Well
CLF	Chain Link Fence	N/F	Now or Formerly
CMP	Corrugated Metal Pipe	OCS	Outlet Control Structure
CO	Clean Out	OTP	Open Top Pipe
CPP	Corrugated Plastic Pipe	PB	Plat Book
CTP	Crimp Top Pipe	PG	Page
DB	Deed Book	PKF	PK Nail Found
DI	Drop Inlet	PKS	PK Nail Set
DE	Drainage Easement	POB	Point of Beginning
EOP	Edge of Pavement	POC	Point of Commencement
EPP	Electric Power Pole	PVC	Polyvinyl Chloride Pipe
EPAN	Electric Panel	RBC	Rebar Capped
ESMT	Easement	RCP	Reinforced Concrete Pipe
FES	Flared End Section	RWM	Right of Way Monument
FFE	Finish Floor Elevation	SSE	Sanitary Sewer Easement
FH	Fire Hydrant	SSMH	Sanitary Sewer Manhole
FLGP	Flag Pole	TRAN	Transformer
FOMRK	Fiber Optic Marker	TTB	Telephone Terminal Box
GA	Georgia	TSIGP	Traffic Signal Pole
GM	Gas Meter	TSIGB	Traffic Signal Loop Control Box
GW	Guy Wire	USTR	Utility Structure
HDR	Hand Rail	VCP	Vitrified Clay Pipe
H.W.	Hard Wood	W.D.F.	Wood Fence
HW	Headwall	WM	Water Meter
ICV	Irrigation Control Valve	WV	Water Valve
I.E.	Invert Elevation	XP	Crosswalk Signal Pole
IPF	Iron Pin Found		

STRUCTURE LEGEND

ELECTRIC/POWER
- E — Transformer
- Guy Wire
- Electric Meter
- Power Pole/Utility Pole
- Street Light/Light Pole

FIBER OPTIC
- FO — Fiber Optic Marker

GAS
- G — Gas Meter

PROPERTY MONUMENTS
- RWM — Right-of-Way Monument Found
- Point
- IPS — Iron Pin Set
- IPF — Iron Pin Found (Rebar found)
- PKS — PK Nail Set
- BM — Benchmark

MISCELLANEOUS UTILITIES
- U — Utility Structure

TRAFFIC
- TSI — Traffic Signal Loop Control Box
- Traffic & Crosswalk Signal Pole

TELEPHONE
- T — Telephone Terminal Box

SEWER
- SS — Sanitary Sewer Manhole

SITE / TOPOGRAPHIC FEATURES
- Street Sign
- AC — Air Condition Unit
- BOL — Bollard
- Mailbox

STORM / DRAINAGE
- Storm Structure Lid
- DI — Drop Inlet
- Catch Basin
- Single Wing Catch Basin
- Double Wing Catch Basin
- Weir Inlet
- Head Wall
- JB — Junction Box
- Curb Inlet

WATER
- Fire Hydrant
- Water Meter
- Water Valve
- W — Water Vault

LINETYPES

PROPERTY
- Adjacent Property
- Property Line
- Center of Creek

FENCE LINES
- X — Barb Wire Fence
- Chain link fence
- Wood Fence
- Woven Wire Fence

SITE / TOPOGRAPHIC FEATURES
- Guardrail

EXISTING OVERHEAD
- OW — Overhead Wires

EXISTING UNDERGROUND
- C — Cable
- E — Electric
- FO — Fiber Optic
- G — Gas
- T — Telecommunications
- W — Water
- TV — Television
- Storm Drainage Line
- SS — Sanitary Sewer

811 Know what's **below.** **Call** before you dig.

PEC+ 60 YEARS
Planners & Engineers Collaborative+
LAND PLANNING + LANDSCAPE ARCHITECTURE + CIVIL ENGINEERING
ARBORISTS + SURVEYING & CONSTRUCTION + WATER RESOURCES
350 RESEARCH COURT PEACHTREE CORNERS, GEORGIA 30092
(770)451-2741 WWW.PEC.PLUS
C.O.A.-LSF000004

REVISIONS

REV	DATE	DESCRIPTION	BY
5			
4			
3			
2			
1			

BOUNDARY AND TOPOGRAPHIC SURVEY
FOR
GARDNER SPENCER SMITH TENCH & JARBEAU, P.C.

420 VALLEY HILL ROAD, RIVERDALE, GEORGIA

LAND LOT(S) 150
DISTRICT 13TH
CITY OF RIVERDALE
CLAYTON COUNTY
GEORGIA

SHEET 1 OF 2
DRAWN BY: MS
CHECKED BY: JNH
FILE NO.: 24221.00
DATE: 10/23/24
SCALE: 1" = 30'
DATE OF FIELD WORK: 10/21/24
0 15 30 60

J:\2024\242100\Su\Drawings\24221.00 - BT SURVEY.dwg - MSkolnik - 11/11/2024 10:30 AM

This drawing is the property of Planners and Engineers Collaborative and is not to be copied in whole or in part. It is not to be used on any other project and is to be returned upon request. © Planners and Engineers Collaborative

NOTES

1. THE UNDERGROUND UTILITIES SHOWN HAVE BEEN LOCATED FROM FIELD SURVEY INFORMATION AND EXISTING DRAWINGS AND UTILITY REPORT DATED NOVEMBER 7, 2024, PREPARED BY GROUNDHAWK SUBTERRANEAN INTELLIGENCE COMPANY, PREPARED FOR PEC PLUS. THIS SURVEYOR MAKES NO GUARANTEE THAT THE UNDERGROUND UTILITIES SHOWN COMPRISE ALL SUCH UTILITIES IN THE AREA, EITHER IN SERVICE OR ABANDONED. THE SURVEYOR FURTHER DOES NOT WARRANT THAT THE UNDERGROUND UTILITIES SHOWN ARE IN THE EXACT LOCATION INDICATED ALTHOUGH HE DOES CERTIFY THAT THEY ARE LOCATED AS ACCURATELY AS POSSIBLE FROM INFORMATION SUPPLIED AND TO THE SURVEYOR'S BEST KNOWLEDGE ARE APPROXIMATELY AS SHOWN. THE SURVEYOR HAS NOT PHYSICALLY LOCATED THE UNDERGROUND UTILITIES. ALL UTILITIES SERVING THE PROPERTY ENTER THROUGH ADJOINING PUBLIC STREETS AND/OR EASEMENTS OF RECORD.

2. I HAVE EXAMINED THE FEDERAL EMERGENCY MANAGEMENT AGENCY FLOOD INSURANCE RATE MAP FOR CLAYTON COUNTY, GEORGIA AND INCORPORATED AREAS, COMMUNITY PANEL NUMBER 13063C0059F, PANEL 59 OF 205, EFFECTIVE DATE JUNE 7, 2017 AND FOUND NO PORTION OF THE PROPERTY SHOWN HEREON TO FALL WITHIN A DESIGNATED FLOOD ZONE "A" (AREAS OF 100 YEAR FLOOD). THE PROPERTY SHOWN HEREON TO FALL WITHIN A DESIGNATED FLOOD ZONE "X" (AREAS DETERMINED TO BE OUTSIDE THE 0.2% ANNUAL CHANCE FLOOD.

3. THE ORTHOMETRIC HEIGHTS (ELEVATIONS AND CONTOURS) SHOWN HEREON WERE DETERMINED BY GPS OBSERVATIONS AND WERE ADJUSTED BY PLANNERS AND ENGINEERS COLLABORATIVE IN OCTOBER 2024. NORTH AMERICAN DATUM OF 1983 (NAD83), NORTH AMERICAN VERTICAL DATUM OF 1988 (NAVD88), GEORGIA WEST ZONE STATE PLANE COORDINATES.

4. THE TERM "CERTIFICATION" RELATING TO PROFESSIONAL ENGINEERING AND LAND SURVEYING SERVICES SHALL MEAN A SIGNED STATEMENT BASED UPON FACTS AND KNOWLEDGE KNOWN TO THE REGISTRANT AND IS NOT A GUARANTEE OR WARRANTY, EITHER EXPRESSED OR IMPLIED.

5. THIS SURVEY HAS BEEN PREPARED WITHOUT THE BENEFIT OF A CURRENT TITLE INSPECTION REPORT. EASEMENTS OR OTHER ENCUMBRANCES MAY EXIST ON PUBLIC RECORD BUT NOT BE SHOWN HEREON.

6. NO ZONING INFORMATION PROVIDED FOR BUILDING SETBACKS.

7. THIS SURVEY WAS MADE IN ACCORDANCE WITH LAWS AND/OR MINIMUM STANDARDS OF THE STATE OF GEORGIA.

8. THE PROPERTY HAS DIRECT ACCESS TO LAMAR HUTCHESON PARKWAY AND VALLEY HILL ROAD, A DEDICATED PUBLIC STREET OR HIGHWAY.

9. THERE IS NO OBSERVED EVIDENCE OF USE OF THE PROPERTY AS A SOLID WASTE DUMP, SUMP OR SANITARY LANDFILL.

10. MONUMENTS PLACED OR FOUND AT ALL MAJOR CORNERS OF THE BOUNDARY OF THE SURVEYED PROPERTY, AND SHOWN HEREON.

11. ADDRESS OF THE SURVEYED PROPERTY: 420 VALLEY HILL ROAD, RIVERDALE, GA 30274

12. GROSS LAND AREA OF SUBJECT PROPERTY IS 2.383 ACRES.

13. NO EVIDENCE OF RECENT EARTH MOVING WORK, BUILDING CONSTRUCTION, OR BUILDING ADDITIONS OBSERVED IN THE PROCESS OF CONDUCTING THE FIELDWORK.

14. NO PROPOSED CHANGES IN STREET RIGHT OF WAY LINES IF SUCH INFORMATION IS MADE AVAILABLE TO THE SURVEYOR BY THE CONTROLLING JURISDICTION.

15. NO EVIDENCE OF RECENT STREET OR SIDEWALK CONSTRUCTION OR REPAIRS OBSERVED IN THE PROCESS OF CONDUCTING THE FIELDWORK.

LEGAL DESCRIPTION

ALL THAT TRACT OR PARCEL OF LAND lying and being in Land Lot 150, 13th District, Clayton County, Georgia and being more particularly described as follows:

BEGIN at a found 1/2 inch rebar, said rebar having coordinates of North 1,298,747.2 and East: 2,224.240.7, coordinates based on NAD83 State Plane Coordinate system, Georgia West zone, said rebar located on the southerly right of way line of Valley Hill Road (variable public right of way), said rebar being the TRUE POINT OF BEGINNING;

THENCE along said southerly right of way of Valley Hill Road along a curve turning to the left with an arc length of 56.60 feet, having a radius of 341.35 feet, being subtended by a chord bearing of S60°12'08"E, and a chord length of 56.54 feet to a point; thence leaving said southerly right of way and proceed S02°02'03"W a distance of 184.53 feet to a point; thence S64°43'04"E a distance of 212.54 feet to a point located on the westerly right of way line of Lamar Hutcheson Parkway (variable public right of way); thence along said westerly right of way of Lamar Hutcheson Parkway the following courses and distances: S19°57'25"W a distance of 300.97 feet to a point; along a curve turning to the right with an arc length of 317.14 feet, having a radius of 804.83 feet, being subtended by a chord bearing of S31°14'44"W, and a chord length of 315.10 feet to a point; thence leaving said westerly right of way and proceed N02°06'25"E a distance of 856.15 feet to a found axle, said axle being the TRUE POINT OF BEGINNING.

Tract or parcel contains 103,810 square feet or 2.383 acres.

REFERENCES

1. DEPARTMENT OF TRANSPORTATION, STATE OF GEORGIA, PLAN AND PROFILE OF PROPOSED LAMAR HUTCHESON PARKWAY PARK AND RIDE LOT, FEDERAL AID PROJECT, PROJECT CS MSL-0007-00(916), CLAYTON COUNTY, COUNTY ROUTE NO: OR491, PREPARED BY URS CORPORATION, PLANS COMPLETED DATE 8-8-06, LAST REVISED 7-18-07, SIGNED AND SEALED BY JEFFREY A. LOWE, REGISTERED ENGINEER IN THE STATE OF GEORGIA, PROFESSIONAL LICENSE NUMBER 27078.

2. BOUNDARY AND TOPOGRAPHIC SURVEY FOR CLAYTON COUNTY LIBRARY SYSTEM, DATED MAY 25, 1995, PREPARED BY PEARSON & ASSOCIATES, INC, SIGNED AND SEALED BY MARK A. BUCKNER, REGISTERED LAND SURVEYOR IN THE STATE OF GEORGIA, PROFESSIONAL LICENSE NUMBER 2422.

3. LAMAR HUTCHESON PARKWAY ROADWAY PLAN, STATION 80+00.00 TO 86+00.00, PREPARED FOR CLAYTON COUNTY DEPARTMENT OF TRANSPORTATION, PREPARED BY SCOGIN ELAM AND BRAY ARCHITECTS, INC.

4. RIVERDALE BRANCH LIBRARY PROJECT CONSTRUCTION PLANS PREPARED BY SCOGIN ELAM AND BRAY ARCHITECTS, DATED JUNE 28, 1996, REISSUED FOR CONTRACT OCTOBER 15, 1996.

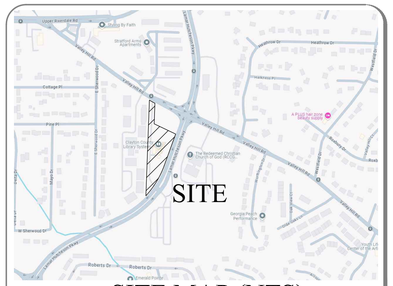

SITE MAP (NTS)

THE PROPERTY HEREON LIES COMPLETELY WITHIN A JURISDICTION WHICH DOES NOT REVIEW, OR APPROVE ANY PLATS, OR THIS TYPE OF PLAT, PRIOER TO RECORDATION. RECORDATION OF THIS PLAT DOES NOT IMPLY APPROVAL OF ANY LOCAL JURISDICTION, AVAILABILITY OF PERMITS, COMPLIANCE WITH LOCAL REGULATIONS OR REQUIREMENTS, OR SUITABILITY FOR ANY USE OR PURPOSE OF THE LAND. FURTHERMORE, THE UNDERSIGNED LAND SURVEYOR CERTIFIES THAT THIS PLAT COMPLIES WITH THE MINIMUM TECHNICAL STANDARDS FOR PROPERTY SURVEYS IN GEORGIA AS SET FORTH IN THE RULES AND REGULATIONS OF THE GEORGIA BOARD OF REGISTRATION FOR PROFESSIONAL ENGINEERS AND LAND SURVEYORS AND AS SET FORTH IN O.C.G.A SECTION 15-6-67.

THE FIELD DATA UPON WHICH THIS PLAT IS BASED WAS COLLECTED USING A TOPCON TOTAL STATION "ES103", "ES105", GEOMAX ZOOM90 ROBOTIC STATATION, A GEOMAX ZENIUS800 SERIES DATA COLLECTOR, eGPS 201L GNSS RECEIVER WITH A SITE-LOCALIZED RTK NETWORK, AND HAS A RELATIVE POSITIONAL ACCURACY OF 0.1 FEET.

THIS PLAT HAS BEEN CALCULATED FOR CLOSURE AND WAS FOUND TO BE ACCURATE WITHIN ONE FOOT IN 506,622 FEET.

Know what's **below.**
Call before you dig.

PEC+ 60 YEARS
Planners & Engineers Collaborative+
LAND PLANNING + LANDSCAPE ARCHITECTURE + CIVIL ENGINEERING
ARBORISTS + SURVEYING & CONSTRUCTION + WATER RESOURCES
350 RESEARCH COURT PEACHTREE CORNERS, GEORGIA 30092
(770)451-2741 WWW.PEC.PLUS
C.O.A.-LSF000004

REVISIONS

REV	DATE	DESCRIPTION	BY
5			
4			
3			
2			
1			

LAND LOT(S) 150
DISTRICT 13TH

BOUNDARY AND TOPOGRAPHIC SURVEY
FOR
GARDNER SPENCER SMITH TENCH & JARBEAU, P.C.

420 VALLEY HILL ROAD, RIVERDALE, GEORGIA

CITY OF RIVERDALE

CLAYTON COUNTY
GEORGIA

SHEET 2 OF 2
DRAWN BY: MS
CHECKED BY: JNH
FILE NO.: 24221.00
DATE: 10/23/24
SCALE: 1" = 30'
DATE OF FIELD WORK: 10/21/24
0 15 30 60

J:\2024\24221001\Si\Drawings\24221.00 - BT SURVEY.dwg - MSbedlisi - 11/11/2024 10:30 AM

This drawing is the property of Planners and Engineers Collaborative and is not to be copied in whole or in part. It is not to be used on any other project and is to be returned upon request. © Planners and Engineers Collaborative

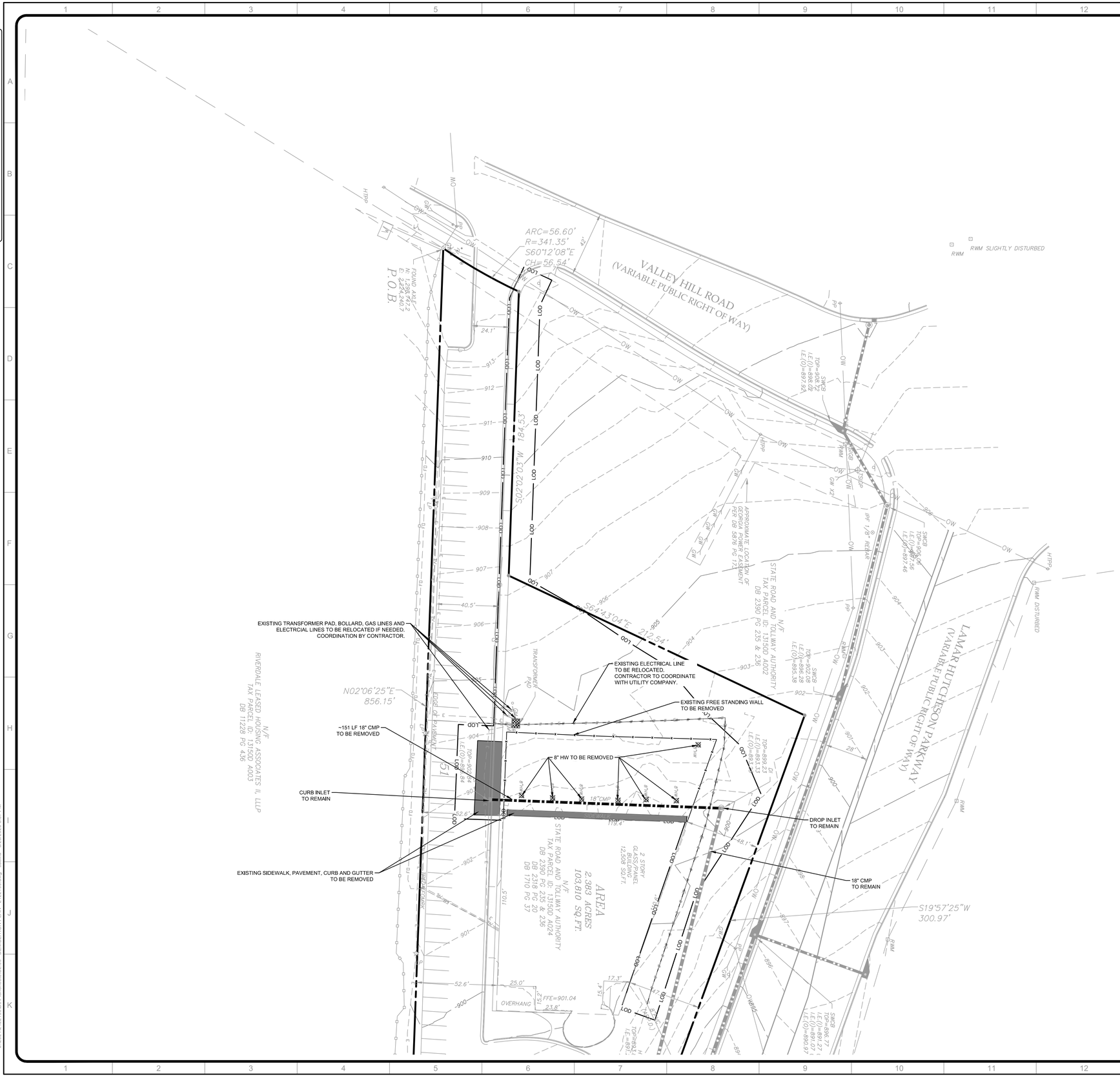

DEMO LEGEND:

- EXISTING PAVING, CURB & GUTTER, AND SIDEWALKS TO BE REMOVED
- EXISTING STRUCTURES TO BE REMOVED
- EXISTING UTILITY FIXTURES TO BE REMOVED
- EXISTING WALLS TO BE REMOVED
- EXISTING UTILITY LINES TO BE REMOVED
- 8" HW EXISTING TREES TO BE REMOVED
- LIMITS OF DISTURBANCE
- SILT FENCE
- TREE PROTECTION FENCE

DEMOLITION NOTES:

1. POLLUTION CONTROLS: USE WATER SPRINKLERS AND TEMPORARY ENCLOSURES TO LIMIT THE AMOUNT OF DUST AND DIRT RISING IN THE AIR TO THE LOWEST PRACTICAL LEVEL. DO NOT USE WATER WHEN IT MAY CREATE HAZARDOUS CONDITIONS, ICE, FLOODING, OR POLLUTION.
2. CLEAN ADJACENT STRUCTURES AND IMPROVEMENTS OF DUST, DIRT, AND DEBRIS CAUSED BY DEMOLITION OPERATIONS. RETURN ADJACENT AREAS TO CONDITION EXISTING PRIOR TO THE START OF THE WORK.
3. COORDINATE WITH THE CORRESPONDING UTILITY COMPANY BEFORE REMOVING ANY UNDERGROUND OR OVERHEAD UTILITY LINES AND TRANSFORMERS.

JOB CONDITIONS

1. CONDITION OF STRUCTURES: PRIOR TO DEMOLITION, THE SITE IS TO BE VISITED BY THE CONTRACTOR TO DETERMINE EXISTING CONDITIONS OF STRUCTURE(S) TO BE REMOVED.
2. PARTIAL REMOVAL: ITEMS OF SALVAGEABLE VALUE TO THE CONTRACTOR MAY BE REMOVED FROM THE STRUCTURE AS THE WORK PROGRESSES. SALVAGED ITEMS MUST BE TRANSPORTED FROM THE SITE AS THEY ARE REMOVED. STORAGE OR SALE OF REMOVED ITEMS ON THE SITE WILL NOT BE PERMITTED.
3. TRAFFIC: CONDUCT DEMOLITION OPERATIONS AND THE REMOVAL OF DEBRIS TO ENSURE MINIMUM INTERFERENCE WITH ROADS, STREETS, WALKS, AND ADJACENT OCCUPIED OR USED FACILITIES. OBTAIN ANY PERMITS FOR LANE CLOSURE IF NECESSARY.
4. PROTECTION: ENSURE THE SAFE PASSAGE OF PERSONS AROUND THE AREA OF DEMOLITION. CONDUCT OPERATIONS TO PREVENT INJURY TO ADJACENT BUILDINGS, STRUCTURES, FACILITIES, AND PERSONS.
5. DAMAGES: PROMPTLY REPAIR DAMAGES CAUSED TO ADJACENT FACILITIES BY DEMOLITION OPERATIONS AT NO COST TO OWNER.

DESCRIPTION OF WORK

1. REMOVE FROM THE SITE DEBRIS, RUBBISH AND MATERIALS RESULTING FROM DEMOLITION OPERATIONS.
2. DEMOLITION INCLUDES THE REMOVAL AND DISPOSAL OF DEMOLISHED MATERIALS, AS SHOWN ON THE DRAWINGS OR HEREIN SPECIFIED. MATERIAL SHALL BE REMOVED FROM THE SITE.
3. CONTRACTOR SHALL NOTIFY ALL GOVERNMENTAL AGENCIES, HAVING JURISDICTION, PRIOR TO THE START OF ANY DEMOLITION WORK. ANY FINES AND/OR PENALTIES INCURRED DUE TO THE CONTRACTOR NOT CONTACTING ALL REQUIRED GOVERNMENTAL AGENCIES PRIOR TO DEMOLITION SHALL BE PAID BY THE CONTRACTOR.

DISPOSAL

1. GENERAL: REMOVE FROM THE SITE DEBRIS, RUBBISH AND MATERIALS RESULTING FROM DEMOLITION OPERATIONS.
2. ALL REMOVED MATERIALS SHALL BECOME THE PROPERTY OF THE CONTRACTOR AND SHALL BE DISPOSED OF IN A LEGAL, ENVIRONMENTALLY SAFE MANNER; RECYCLING OR SALVAGE OF MATERIALS IS STRONGLY RECOMMENDED AND ENCOURAGED.
3. REMOVAL: TRANSPORT MATERIALS REMOVED FROM DEMOLISHED STRUCTURES AND DISPOSE OF OFF THE SITE.

MISCELLANEOUS

1. ALL LAND DISTURBANCE TO BE STABILIZED WITH VEGETATION UPON COMPLETION OF DEMOLITION.
2. ALL TREES TO REMAIN AND HAVE PROPER PROTECTION UNLESS APPROVED PLANS INDICATE OTHERWISE.
3. ALL DEMOLITION DEBRIS TO BE HAULED OFF SITE.
4. DUMPSTERS AND/OR TEMPORARY SANITARY FACILITIES SHALL NOT BE LOCATED IN STREET OR TREE PROTECTION AREA.
5. ADDITIONAL EROSION CONTROLS SHALL BE INSTALLED AS DEEMED NECESSARY BY THE ON-SITE INSPECTOR.
6. EACH BUILDING/STRUCTURE WILL REQUIRE A SEPARATE DEMOLITION PERMIT.
7. CONTRACTOR SHALL ADJUST AND/OR REPLACE ALL DAMAGED EXISTING CURBS OR CURB AND GUTTER ALONG PROPERTY FRONTAGE TO THE PROPER HEIGHT OF 6" ABOVE THE EXISTING PAVEMENT ELEVATION. ANY MISSING CURBS AND/OR GAPS DUE TO DRIVEWAY RELOCATIONS, WILL REQUIRE NEW CURBS TO BE INSTALLED TO MATCH EXISTING.
8. ALL TRAFFIC SIGNS SHALL BE REMOVED WITHIN LIMIT OF DISTURBANCE.
9. ALL FENCES AND WALLS SHALL BE REMOVED WITHIN LIMIT OF DISTURBANCE.
10. DEMOLITION CONTRACTOR TO CONFIRM THAT THE LOCATION OF EXISTING UTILITIES AND STRUCTURES MATCHES SURVEY PRIOR TO ANY DEMOLITION. CONTRACTOR TO CONFIRM ALL ITEMS TO BE DEMOLISHED WITH CLIENT OR ENGINEER PRIOR TO DEMOLITION.

GEORGIA811
www.Georgia811.com
Know what's below. Call before you dig.

24-HOUR CONTACT:
JOSEPH GARDNER
404.281.5251

P: (770) 451-2741 F: (770) 451-3915
WWW.PEC.PLUS
PEC+ 60 YEARS
Planners & Engineers Collaborative+
LAND PLANNING + LANDSCAPE ARCHITECTURE + CIVIL ENGINEERING
ARBORISTS + SURVEYING & CONSTRUCTION + WATER RESOURCES
350 RESEARCH COURT STE 200
PEACHTREE CORNERS, GA 30092

PROJECT

RIVERDALE LIBRARY EXPANSION

AN EXPANSION DEVELOPMENT

AT

420 VALLEY HILL RD
RIVERDALE, GA 30274

FOR

GARDNER SPENCER SMITH TENCH & JARBEAU, P.C.
3340 PEACHTREE RD NE,
SUITE 1800
ATLANTA, GA 30326
P: 404.522.8805

REVISIONS

NO.	DATE	BY	DESCRIPTION

THIS SEAL IS ONLY VALID IF COUNTER SIGNED AND DATED WITH AN ORIGINAL SIGNATURE.

PRELIMINARY

NOT TO BE RELEASED FOR CONSTRUCTION

DEMOLITION PLAN

0 15 30 60 90

SCALE: 1" = 30'
DATE: 06/20/2025
PROJECT: 24221.00

GRID NORTH
GEORGIA WEST ZONE

C2.00
SHEET

J:\2024\24221\00\Dwg\Plansheets\C2.00 - DEMOLITION PLAN - 24221.00.dwg - cstevel - 6/20/2025 3:37 PM

This drawing is the property of Planners and Engineers Collaborative and is not to be copied in whole or in part. It is not to be used on any other project and is to be returned upon request. © Planners and Engineers Collaborative

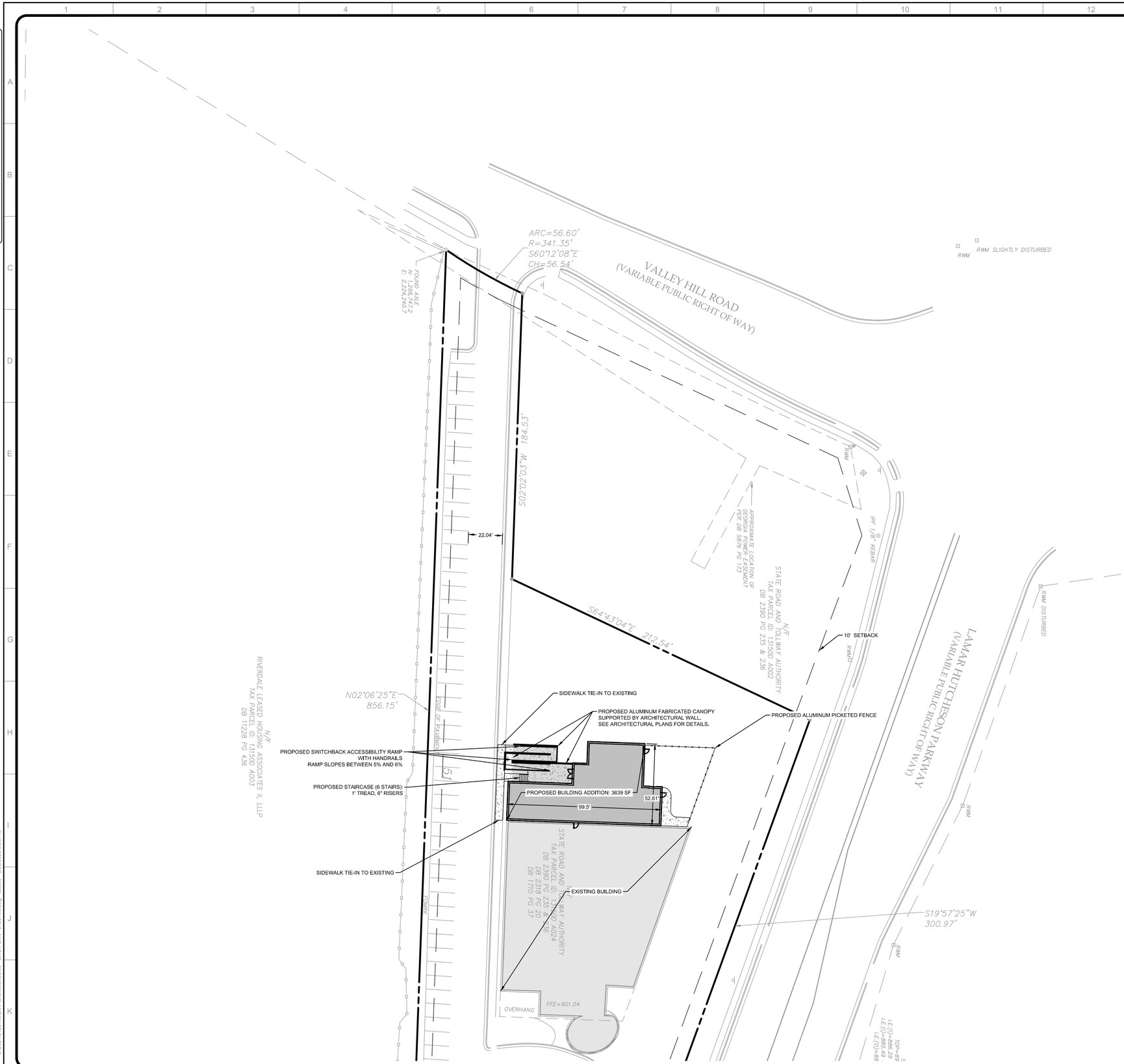

SITE DATA:

ADDRESS	420 VALLEY HILL RD, RIVERDALE, GA 30274
SITE AREA	2.383 ACRES
IMPERVIOUS AREA	4749 SF
ZONING	
ZONING	O-I
ZONING JURISDICTION	CLAYTON COUNTY
DEVELOPMENT STANDARDS	
FRONT YARD	10 FEET
SIDE YARD	10 FEET
REAR YARD	10 FEET
PARKING	
REQUIRED PARKING	69 SPACES
TOTAL EXISTING PARKING SPACES	69 SPACES

SITE NOTES:

1. INSTALLATION OF SIDEWALK ALONG PUBLIC RIGHT-OF-WAY SHALL BE IN ACCORDANCE WITH REQUIREMENTS OF CLAYTON COUNTY CODE. SIDEWALKS AND CONCRETE CURB AND GUTTER SHALL CONFORM TO THE CLAYTON COUNTY STANDARD DETAILS.
2. ALL WORK AND MATERIALS SHALL COMPLY WITH THE CLAYTON COUNTY, GEORGIA REGULATIONS AND CODES AND O.S.H.A. STANDARDS.
3. EXISTING STRUCTURES WITHIN CONSTRUCTION LIMITS ARE TO BE ABANDONED REMOVED, OR RELOCATED AS NECESSARY.
4. CONTRACTOR SHALL OBTAIN ALL PERMITS BEFORE CONSTRUCTION BEGINS.
5. BUILDING DIMENSIONS SHOWN ON THIS PLAN ARE SCHEMATIC IN NATURE. SEE ARCHITECTURAL PLANS FOR ACTUAL DIMENSIONS.
6. SITE WORK CONTRACTOR IS RESPONSIBLE FOR WORK TO WITHIN 5' OF THE BUILDINGS.
7. CONTRACTOR SHALL BE RESPONSIBLE FOR ALL RELOCATION INCLUDING BUT NOT LIMITED TO, ALL UTILITIES, STORM DRAINAGE, SIGNS, TRAFFIC SIGNALS AND POLES, ETC., GOVERNING AUTHORITIES SPECIFICATIONS AND SHALL BE APPROVED BY SUCH. ALL COST SHALL BE INCLUDED IN BASE BID.
8. ALL TEMPORARY AND PERMANENT SIGNS SHALL BE PERMITTED SEPARATELY.
9. OPEN BURNING OR BURY PITS ARE NOT ALLOWED.
10. THERE ARE NO KNOWN WETLANDS ON SITE PER THE NATIONAL WETLANDS INVENTORY MAP.

PROPOSED ADDITIONAL IMPERVIOUS AREA: 4749 SF

Ds4 DISTURBED AREA STABILIZATION (WITH SODDING)

DEFINITION

A permanent vegetation using sods on highly erodible or critically eroded lands, 6-6.2. See figure 6-4.1 for your Resource Area.

CONDITIONS

This application is appropriate for areas which require immediate vegetative covers, drop inlets, grass swales, and waterways with intermittent flow.

CONSTRUCTION SPECIFICATIONS INSTALLATION

Soil Preparation

- Bring soil surface to final grade, Clear surface of trash, woody debris, stones and clods larger than 1". Apply sod to soil surfaces only and not frozen surfaces, or gravel type soils.
- Topsoil properly applied will help guarantee stand, Don't use topsoil recently treated with herbicide or soil sterilants.
- Mix fertilizer into soil surface, Fertilize based on soil tests of Table 6-6.1, For fall planting of warm season species, half the fertilizer should be applied at planting and the other half in the spring.

Table 6-6.1, Fertilizer Requirements for Sod Surface Application

Fertilizer Type (lbs./acre)	Fertilizer Rate (lbs./acre)	Fertilizer Rate	Season
10/10/20/10	1000	0.0250	Fall

- Agricultural lime should be applied based on soil tests or at a rate of 1 to 2 tons per acre.

Installation

- Lay sod with tight joints and in straight lines, Don't overlap joints. Stagger joints and lay sod in a staggered.
- On slopes steeper than 3:1, sod should be anchored with wooden or biodegradable pins or other approved methods.
- Installed sod should be rolled or tamped to provide good contact between sod and soil.
- Irrigate sod and soil to a depth of 4" immediately after installation.
- Sod should not be cut or spread in extremely wet or dry weather.
- Irrigation should be used to supplement rainfall for a minimum of 2-3 weeks.

MATERIALS

- Sod selected should be certified, Sod grown in the general area of the project is desirable.
- Sod should be machine cut and contain 3/4" + 1/4" of soil, not including shoots and thatch.
- Sod should be cut to the desired size within ±5%, Torn or uneven pads should be rejected.
- Sod should be cut and installed within 36 hours of digging.
- Avoid planting when subject to frost heave or hot weather if irrigation is not available.
- The sod type should be shown on the plans or installed according to Table 6-6.2, See figure 6-4.1 for your Resource Area.

Table 6-6.2, Sod Planting Requirements

Grass	Varieties	Resource Area	Growing Season
Bermudagrass	Common Tifway Tifgreen Tifdwarf	M-L,P-C P,C P,C P,C	Warm Weather
Bahiagrass	Pensacola	P,C	Warm Weather
Centipede	-	P,C	Warm Weather
St. Augustine	Common Bitterblue Raleigh	C	Warm Weather
Zoysia	Emerald Meyer	P,C	Warm Weather
Tall Fescue	Kentucky	M-L,P	Cool Weather

MAINTENANCE

- Reseed areas where an adequate stand of sod is not obtained.
- Mow when the grass reached spaningly, Grass height should not be cut less than 2"-3" or as specified.
- Apply one lon of agricultural lime as indicated by soil test every 4-6 years.
- Fertilize grasses in accordance with soil tests or Table 6-6.3.

Table 6-6.3, Fertilizer Requirements for Sod

Types of Species	Planting Year	Fertilizer (N-P-K)	Rate (lbs./acre)	Nitrogen Top Dressing Rate (lbs./acre)
Cool Season Grasses	First Second Maintenance	6-12-12 6-12-12 10-10-10	1500 1000 400	50-100 - 30
Warm Season Grasses	First Second Maintenance	6-12-12 10-10-10 10-10-10	1500 800 400	50-100 50-400 30

GEORGIA811
www.Georgia811.com
Know what's below. Call before you dig.

P: (770) 451-2741 F: (770) 451-3915
WWW.PEC.PLUS
PEC+ 60 YEARS
Planners & Engineers Collaborative+
LAND PLANNING + LANDSCAPE ARCHITECTURE + CIVIL ENGINEERING
ARBORISTS + SURVEYING & CONSTRUCTION + WATER RESOURCES
350 RESEARCH COURT STE 200
PEACHTREE CORNERS, GA 30092

PROJECT

RIVERDALE LIBRARY EXPANSION

AN EXPANSION DEVELOPMENT

AT

420 VALLEY HILL RD
RIVERDALE, GA 30274

FOR

GARDNER SPENCER SMITH TENCH & JARBEAU, P.C.
3340 PEACHTREE RD NE,
SUITE 1800
ATLANTA, GA 30326
P: 404.522.8805

REVISIONS

NO.	DATE	BY	DESCRIPTION

THIS SEAL IS ONLY VALID IF COUNTER SIGNED AND DATED WITH AN ORIGINAL SIGNATURE.

GEORGIA REGISTERED No. 37096 PROFESSIONAL ENGINEER MATTHEW E. KACZENSKI

GSWCC LEVEL II DESIGN PROFESSIONAL
CERTIFICATION # 0000066476 EXP. 06/27/2027

SITE PLAN

0 15 30 60 90

SCALE: 1" = 30'
DATE: 03/26/2026
PROJECT: 24221.00

GRID NORTH
GEORGIA WEST ZONE

C3.00
SHEET

J:\2024\24221000\Civil\Plansheets\C3.00 - SITE PLAN - 24221.00.dwg - cotrell - 3/26/2026 2:53 PM

This drawing is the property of Planners and Engineers Collaborative and is not to be copied in whole or in part. It is not to be used on any other project and is to be returned upon request. © Planners and Engineers Collaborative

GRADING NOTES:

1. DISTURBED AREAS LEFT IDLE FOR FOURTEEN DAYS, AND NOT TO FINAL GRADE, SHALL BE ESTABLISHED TO TEMPORARY VEGETATION (Ds2). DISTURBED AREAS LEFT IDLE FOUR WEEKS OR MORE WILL BE ESTABLISHED TO PERMANENT VEGETATION (Ds3). ALL AREAS TO FINAL GRADE SHALL BE ESTABLISHED TO PERMANENT VEGETATION WITHIN TWO WEEKS.
2. WHEN HAND PLANTING, MULCH (HAY OR STRAW) SHALL BE UNIFORMLY SPREAD OVER SEEDED AREA WITHIN 24 HOURS OF SEEDING.
3. DURING UNSUITABLE GROWING SEASONS, MULCH SHALL BE USED AS A TEMPORARY COVER (Ds1). ON SLOPES THAT ARE 4:1 OR STEEPER, MULCH SHALL BE ANCHORED.
4. CLAYTON COUNTY LAND DISTURBANCE PERMIT MUST BE DISPLAYED ON THE SITE AT ALL TIMES DURING CONSTRUCTION AND IN PLAIN VIEW FROM A COUNTY ROAD OR STREET.
5. SEDIMENT/EROSION CONTROL DEVICES MUST BE CHECKED AFTER EACH STORM EVENT. EACH DEVICE SHALL BE MAINTAINED OR REPLACED IF SEDIMENT ACCUMULATION HAS REACHED ON HALF THE CAPACITY OF THE DEVICE.
6. THE STREET CONSTRUCTION SHALL DEMONSTRATE ADEQUATE COMPACTION WITH PROFESSIONAL TESTING AND REPORTS PREPARED BY A GEORGIA REGISTERED PROFESSIONAL CIVIL ENGINEER. THE SANITARY SEWER INSTALLATION SHALL INCLUDE AN INTERNAL TELEVISION INSPECTION, A SUCCESSFUL MANDRELL PULL AND SUCCESSFUL LEAK-DOWN PRESSURE TEST.
7. ALL WORK AND MATERIALS SHALL COMPLY WITH THE CLAYTON COUNTY GEORGIA REGULATIONS AND CODES AND O.S.H.A. STANDARDS.
8. EXISTING STRUCTURES WITHIN CONSTRUCTION LIMITS ARE TO BE ABANDONED REMOVED, OR RELOCATED AS NECESSARY.
9. CONTRACTOR SHALL BE RESPONSIBLE FOR ALL RELOCATION INCLUDING BUT NOT LIMITED TO, ALL UTILITIES, STORM DRAINAGE, SIGNS, TRAFFIC SIGNALS AND POLES, ETC., GOVERNING AUTHORITIES SPECIFICATIONS AND SHALL BE APPROVED BY SUCH. ALL COST SHALL BE INCLUDED IN BASE BID.
10. OPEN BURNING OR BURY PITS ARE NOT ALLOWED.
11. THERE ARE NO KNOWN WETLANDS ON SITE PER THE NATIONAL WETLANDS INVENTORY MAP.

STORM NOTES:

1. BEDDING, FITTINGS AND CONNECTIONS PER MANUFACTURER'S SPECIFICATIONS.
2. LOCATION OF ROOF LEADERS NOT KNOWN AT THE TIME OF THIS PERMIT SET. CONTRACTOR TO CONNECT ROOF LEADERS WITH 8" DIA. HDPE WHERE FEASIBLE. CONTRACTOR TO CONTACT ENGINEER IF CONFLICT OCCURS.
3. GRATE AND YARD INLETS SHALL BE NYLOPLAST 12" OR EQUIVALENT. GRATE INLET IN DRIVE AREA SHALL BE TRAFFIC RATED. INSTALLATION PER MANUFACTURE'S SPECIFICATIONS.

DIRT STATEMENT:

CUT	FILL
685 C.Y.	46 C.Y.

CONTRACTOR SHALL PERFORM AND CONCLUDE EARTHWORK CALCULATIONS INDEPENDENTLY AND SHALL NOT RELY ON THESE OPINION OF VOLUMES. VOLUMES STATED ARE USED TO SECURE A HAUL ROUTE PERMIT ONLY.

EROSION CONTROL LEGEND:

- LOD — LIMITS OF DISTURBANCE
- Sd1-NS — SEDIMENT BARRIER (WIRE REINFORCED SILT FENCE)
- Sd2-F — INLET SEDIMENT TRAP (FABRIC AND SUPPORTING FRAME)
- Sd2-P — CURB INLET PROTECTION
- DIRECTION OF FLOW
- Ds1 — TEMPORARY MULCHING
- Ds2 — TEMPORARY SEEDING
- Du — DUST CONTROL

SOIL INFORMATION:

THE EXISTING SITE CONSISTS OF:
CeB - CECIL SANDY LOAM

GEORGIA811
www.Georgia811.com
Know what's below. Call before you dig.

P: (770) 451-2741 F: (770) 451-3915
WWW.PEC.PLUS
PEC+ 60 YEARS
Planners & Engineers Collaborative+
LAND PLANNING + LANDSCAPE ARCHITECTURE + CIVIL ENGINEERING
ARBORISTS + SURVEYING & CONSTRUCTION + WATER RESOURCES
350 RESEARCH COURT STE 200
PEACHTREE CORNERS, GA 30092

PROJECT

RIVERDALE LIBRARY EXPANSION

AN EXPANSION DEVELOPMENT

AT

420 VALLEY HILL RD
RIVERDALE, GA 30274

FOR

GARDNER SPENCER SMITH TENCH & JARBEAU, P.C.
3340 PEACHTREE RD NE,
SUITE 1800
ATLANTA, GA 30326
P: 404.522.8805

REVISIONS

NO.	DATE	BY	DESCRIPTION

THIS SEAL IS ONLY VALID IF COUNTER SIGNED AND DATED WITH AN ORIGINAL SIGNATURE.

PRELIMINARY

NOT TO BE RELEASED FOR CONSTRUCTION

GRADING AND EROSION PLAN

0 15 30 60 90

SCALE: 1" = 30'
DATE: 06/20/2025
PROJECT: 24221.00

GRID NORTH
GEORGIA WEST ZONE

C4.00
SHEET

J:\2024\24221\00\Cad\Plansheets\C4.00 - GRADING PLAN - 24221\00.dwg - cstevens - 6/20/2025 3:38 PM

This drawing is the property of Planners and Engineers Collaborative and is not to be copied in whole or in part. It is not to be used on any other project and is to be returned upon request. © Planners and Engineers Collaborative

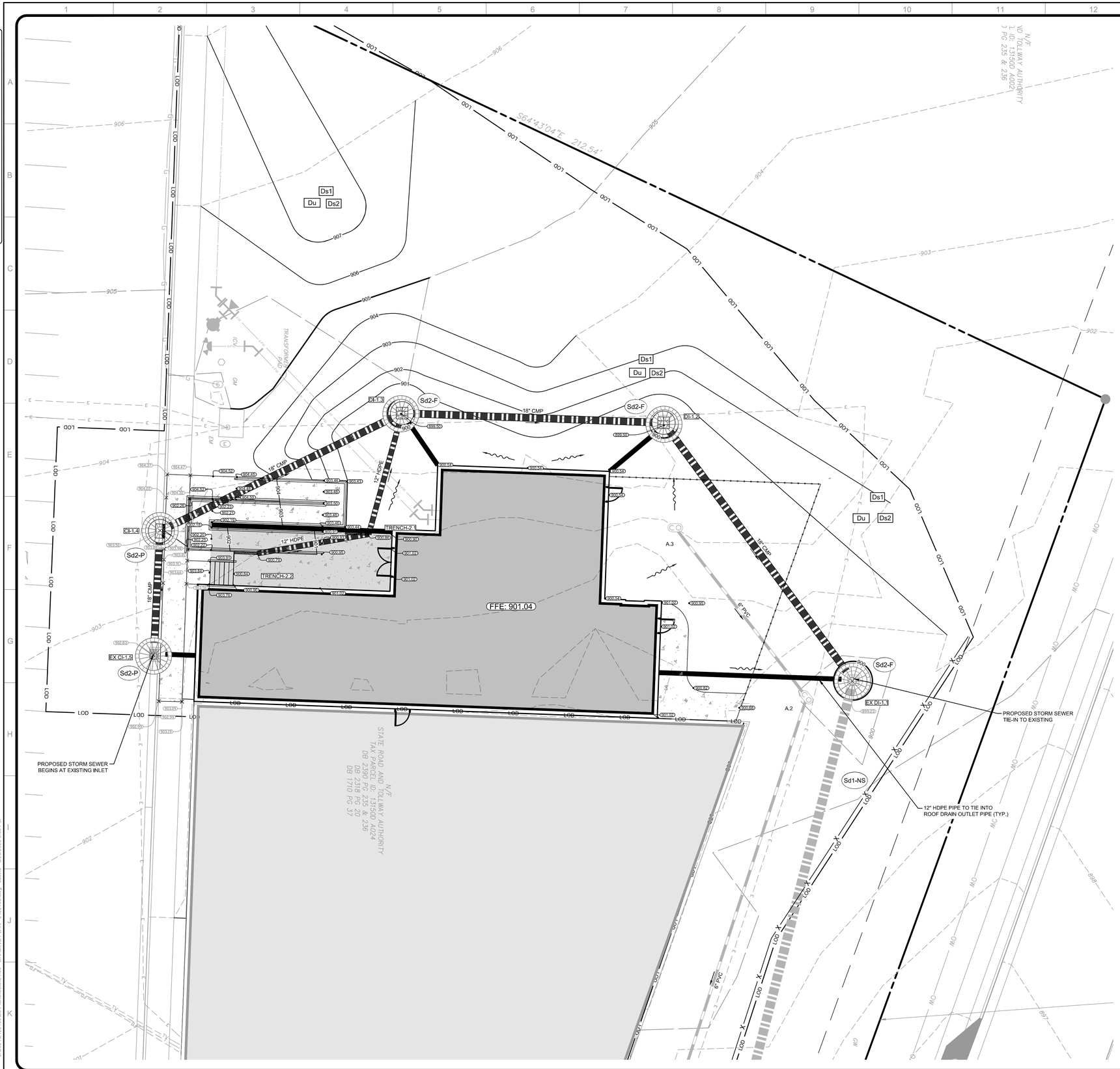

GRADING NOTES:

1. DISTURBED AREAS LEFT IDLE FOR FOURTEEN DAYS, AND NOT TO FINAL GRADE, SHALL BE ESTABLISHED TO TEMPORARY VEGETATION (Ds2). DISTURBED AREAS LEFT IDLE FOUR WEEKS OR MORE WILL BE ESTABLISHED TO PERMANENT VEGETATION (Ds3). ALL AREAS TO FINAL GRADE SHALL BE ESTABLISHED TO PERMANENT VEGETATION WITHIN TWO WEEKS.
2. WHEN HAND PLANTING, MULCH (HAY OR STRAW) SHALL BE UNIFORMLY SPREAD OVER SEEDED AREA WITHIN 24 HOURS OF SEEDING.
3. DURING UNSUITABLE GROWING SEASONS, MULCH SHALL BE USED AS A TEMPORARY COVER (Ds1). ON SLOPES THAT ARE 4:1 OR STEEPER, MULCH SHALL BE ANCHORED.
4. CLAYTON COUNTY LAND DISTURBANCE PERMIT MUST BE DISPLAYED ON THE SITE AT ALL TIMES DURING CONSTRUCTION AND IN PLAIN VIEW FROM A COUNTY ROAD OR STREET.
5. SEDIMENT/EROSION CONTROL DEVICES MUST BE CHECKED AFTER EACH STORM EVENT. EACH DEVICE SHALL BE MAINTAINED OR REPLACED IF SEDIMENT ACCUMULATION HAS REACHED ON HALF THE CAPACITY OF THE DEVICE.
6. THE STREET CONSTRUCTION SHALL DEMONSTRATE ADEQUATE COMPACTION WITH PROFESSIONAL TESTING AND REPORTS PREPARED BY A GEORGIA REGISTERED PROFESSIONAL CIVIL ENGINEER. THE SANITARY SEWER INSTALLATION SHALL INCLUDE AN INTERNAL TELEVISION INSPECTION, A SUCCESSFUL MANDRELL PULL AND SUCCESSFUL LEAK-DOWN PRESSURE TEST.
7. ALL WORK AND MATERIALS SHALL COMPLY WITH THE CLAYTON COUNTY GEORGIA REGULATIONS AND CODES AND O.S.H.A. STANDARDS.
8. EXISTING STRUCTURES WITHIN CONSTRUCTION LIMITS ARE TO BE ABANDONED REMOVED, OR RELOCATED AS NECESSARY.
9. CONTRACTOR SHALL BE RESPONSIBLE FOR ALL RELOCATION INCLUDING BUT NOT LIMITED TO, ALL UTILITIES, STORM DRAINAGE, SIGNS, TRAFFIC SIGNALS AND POLES, ETC., GOVERNING AUTHORITIES SPECIFICATIONS AND SHALL BE APPROVED BY SUCH. ALL COST SHALL BE INCLUDED IN BASE BID.
10. OPEN BURNING OR BURY PITS ARE NOT ALLOWED.
11. THERE ARE NO KNOWN WETLANDS ON SITE PER THE NATIONAL WETLANDS INVENTORY MAP.

STORM NOTES:

1. BEDDING, FITTINGS AND CONNECTIONS PER MANUFACTURER'S SPECIFICATIONS.
2. LOCATION OF ROOF LEADERS NOT KNOWN AT THE TIME OF THIS PERMIT SET. CONTRACTOR TO CONNECT ROOF LEADERS WITH 8" DIA. HDPE WHERE FEASIBLE. CONTRACTOR TO CONTACT ENGINEER IF CONFLICT OCCURS.
3. GRATE AND YARD INLETS SHALL BE NYLOPLAST 12" OR EQUIVALENT. GRATE INLET IN DRIVE AREA SHALL BE TRAFFIC RATED. INSTALLATION PER MANUFACTURE'S SPECIFICATIONS.

DIRT STATEMENT:

CUT	FILL
685 C.Y.	46 C.Y.

CONTRACTOR SHALL PERFORM AND CONCLUDE EARTHWORK CALCULATIONS INDEPENDENTLY AND SHALL NOT RELY ON THESE OPINION OF VOLUMES. VOLUMES STATED ARE USED TO SECURE A HAUL ROUTE PERMIT ONLY.

EROSION CONTROL LEGEND:

- LOD — LIMITS OF DISTURBANCE
- Sd1-NS — SEDIMENT BARRIER (WIRE REINFORCED SILT FENCE)
- Sd2-F — INLET SEDIMENT TRAP (FABRIC AND SUPPORTING FRAME)
- Sd2-P — CURB INLET PROTECTION
- DIRECTION OF FLOW
- Ds1 — TEMPORARY MULCHING
- Ds2 — TEMPORARY SEEDING
- Du — DUST CONTROL

GEORGIA811 www.Georgia811.com Know what's below. Call before you dig.

P: (770) 451-2741 F: (770) 451-3915
WWW.PEC.PLUS
PEC+ 60 YEARS
Planners & Engineers Collaborative+
LAND PLANNING + LANDSCAPE ARCHITECTURE + CIVIL ENGINEERING
ARBORISTS + SURVEYING & CONSTRUCTION + WATER RESOURCES
350 RESEARCH COURT STE 200
PEACHTREE CORNERS, GA 30092

PROJECT

RIVERDALE LIBRARY EXPANSION

AN EXPANSION DEVELOPMENT

AT

420 VALLEY HILL RD
RIVERDALE, GA 30274

FOR

GARDNER SPENCER SMITH TENCH & JARBEAU, P.C.
3340 PEACHTREE RD NE,
SUITE 1800
ATLANTA, GA 30326
P: 404.522.8805

REVISIONS

NO.	DATE	BY	DESCRIPTION

THIS SEAL IS ONLY VALID IF COUNTER SIGNED AND DATED WITH AN ORIGINAL SIGNATURE.

PRELIMINARY

NOT TO BE RELEASED FOR CONSTRUCTION

SCALED GRADING AND EROSION PLAN

0 5 10 20 30

SCALE: 1" = 10'
DATE: 06/20/2025
PROJECT: 24221.00

GRID NORTH
GEORGIA WEST ZONE

C4.01
SHEET

This drawing is the property of Planners and Engineers Collaborative and is not to be copied in whole or in part, its not to be used on any other project and is to be returned upon request. © Planners and Engineers Collaborative

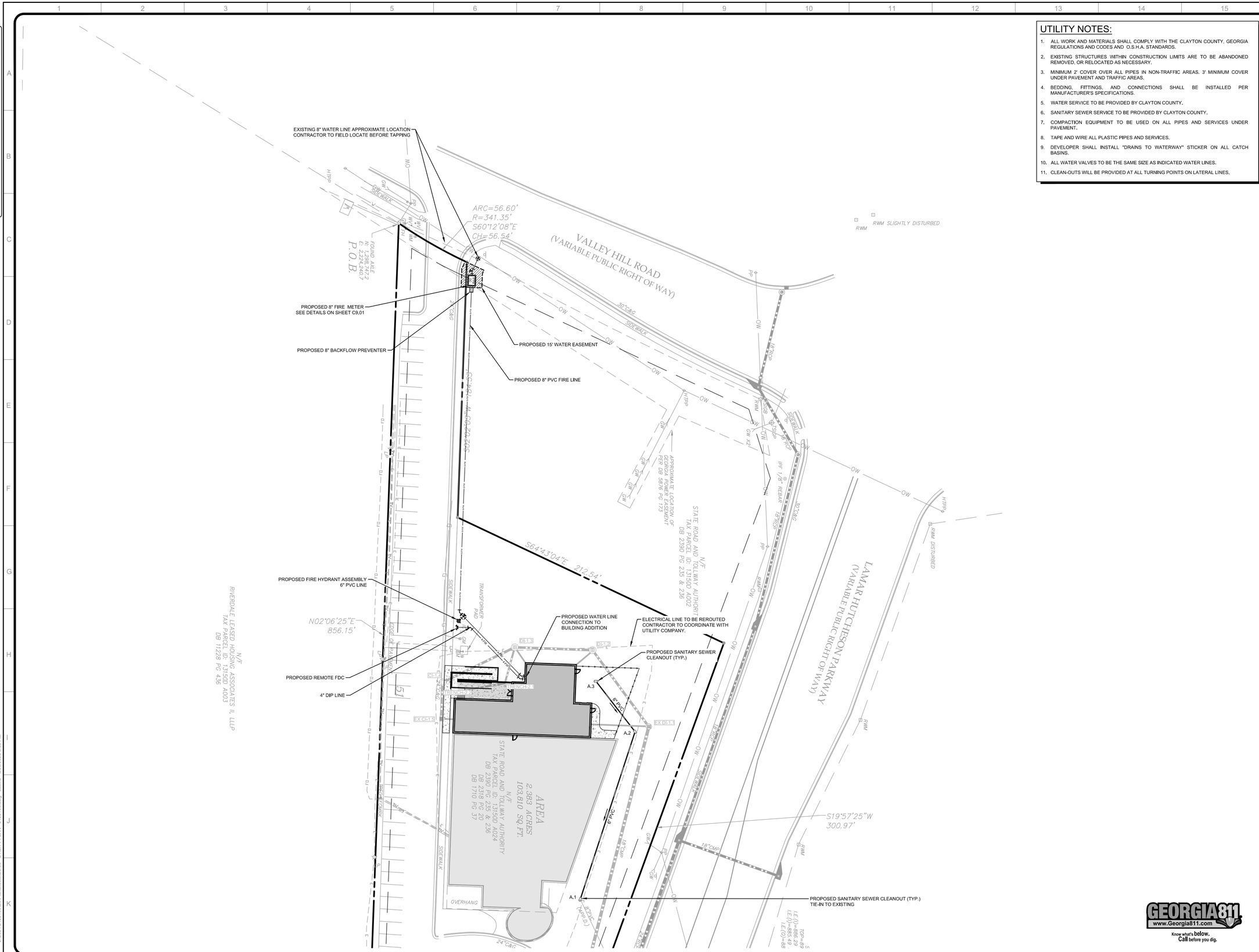

UTILITY NOTES:

1. ALL WORK AND MATERIALS SHALL COMPLY WITH THE CLAYTON COUNTY, GEORGIA REGULATIONS AND CODES AND O.S.H.A. STANDARDS.
2. EXISTING STRUCTURES WITHIN CONSTRUCTION LIMITS ARE TO BE ABANDONED REMOVED, OR RELOCATED AS NECESSARY.
3. MINIMUM 2' COVER OVER ALL PIPES IN NON-TRAFFIC AREAS. 3' MINIMUM COVER UNDER PAVEMENT AND TRAFFIC AREAS.
4. BEDDING, FITTINGS, AND CONNECTIONS SHALL BE INSTALLED PER MANUFACTURER'S SPECIFICATIONS.
5. WATER SERVICE TO BE PROVIDED BY CLAYTON COUNTY.
6. SANITARY SEWER SERVICE TO BE PROVIDED BY CLAYTON COUNTY.
7. COMPACTION EQUIPMENT TO BE USED ON ALL PIPES AND SERVICES UNDER PAVEMENT.
8. TAPE AND WIRE ALL PLASTIC PIPES AND SERVICES.
9. DEVELOPER SHALL INSTALL "DRAINS TO WATERWAY" STICKER ON ALL CATCH BASINS.
10. ALL WATER VALVES TO BE THE SAME SIZE AS INDICATED WATER LINES.
11. CLEAN-OUTS WILL BE PROVIDED AT ALL TURNING POINTS ON LATERAL LINES.

P: (770) 451-2741 F: (770) 451-3915
WWW.PEC.PLUS
PEC+ 60 YEARS
Planners & Engineers Collaborative+
LAND PLANNING + LANDSCAPE ARCHITECTURE + CIVIL ENGINEERING
ARBORISTS + SURVEYING & CONSTRUCTION + WATER RESOURCES
350 RESEARCH COURT STE 200
PEACHTREE CORNERS, GA 30092

PROJECT

RIVERDALE LIBRARY EXPANSION

AN EXPANSION DEVELOPMENT

AT

420 VALLEY HILL RD
RIVERDALE, GA 30274

FOR

GARDNER SPENCER SMITH TENCH & JARBEAU, P.C.
3340 PEACHTREE RD NE,
SUITE 1800
ATLANTA, GA 30326
P: 404.522.8805

REVISIONS

NO.	DATE	BY	DESCRIPTION

THIS SEAL IS ONLY VALID IF COUNTER SIGNED AND DATED WITH AN ORIGINAL SIGNATURE.

PRELIMINARY

NOT TO BE RELEASED FOR CONSTRUCTION

UTILITY PLAN

0 15 30 60 90

SCALE: 1" = 30'
DATE: 06/20/2025
PROJECT: 24221.00

GRID NORTH
GEORGIA WEST ZONE

C5.00
SHEET

GEORGIA811
www.Georgia811.com
Know what's below. Call before you dig.

J:\2024\24221\00\Drawings\Sheets\C5.00 - UTILITY PLAN - 24221\00.dwg - cstevens - 6/20/2025 3:39 PM

This drawing is the property of Planners and Engineers Collaborative and is not to be copied in whole or in part. It is not to be used on any other project and is to be returned upon request. © Planners and Engineers Collaborative

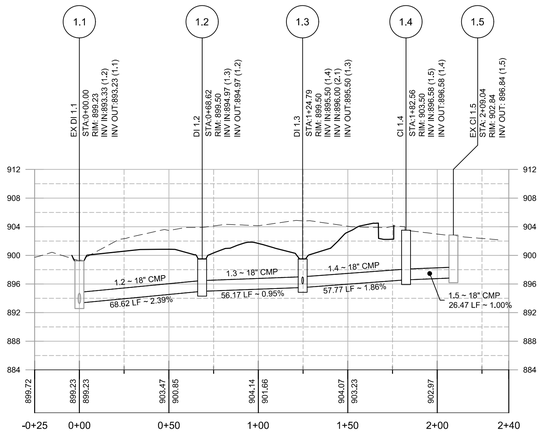

STORM SEWER LINE 1
HORIZONTAL SCALE: 1" = 40'
VERTICAL SCALE: 1" = 10'

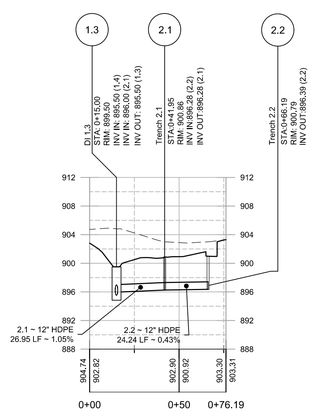

STORM SEWER LINE 2
HORIZONTAL SCALE: 1" = 40'
VERTICAL SCALE: 1" = 10'

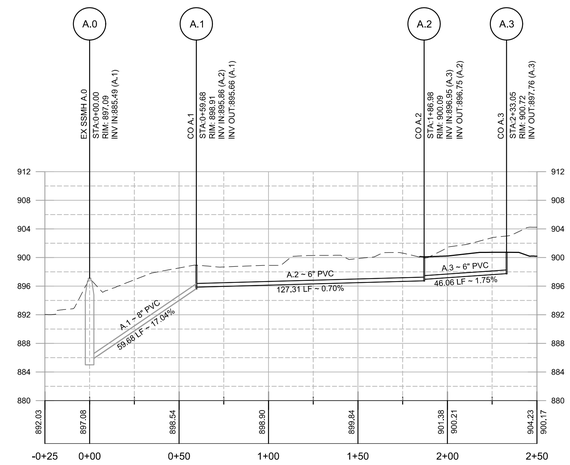

SANITARY SEWER LINE A
HORIZONTAL SCALE: 1" = 40'
VERTICAL SCALE: 1" = 10'

LEGEND:
- EXISTING GRADE
- PROPOSED GRADE

P: (770) 451-2741 F: (770) 451-3915
WWW.PEC.PLUS
PEC+ 60 YEARS
Planners & Engineers Collaborative+
LAND PLANNING + LANDSCAPE ARCHITECTURE + CIVIL ENGINEERING
ARBORISTS + SURVEYING & CONSTRUCTION + WATER RESOURCES
350 RESEARCH COURT STE 200
PEACHTREE CORNERS, GA 30092

PROJECT

RIVERDALE LIBRARY EXPANSION

AN EXPANSION DEVELOPMENT

AT

420 VALLEY HILL RD
RIVERDALE, GA 30274

FOR

GARDNER SPENCER SMITH TENCH & JARBEAU, P.C.
3340 PEACHTREE RD NE,
SUITE 1800
ATLANTA, GA 30326
P: 404.522.8805

REVISIONS

NO.	DATE	BY	DESCRIPTION

THIS SEAL IS ONLY VALID IF COUNTER SIGNED AND DATED WITH AN ORIGINAL SIGNATURE.

PRELIMINARY

NOT TO BE RELEASED FOR CONSTRUCTION

PIPE PROFILES

0 20 40 80 120

SCALE: 1" = 40'
DATE: 06/20/2025
PROJECT: 24221.00

GRID NORTH
GEORGIA WEST ZONE

C7.00
SHEET

J:\2024\24221.00\Dwg\Plansheets\C7.00 - PIPE PROFILES - 24221.00.dwg - colored - 6/20/2025 3:39 PM

This drawing is the property of Planners and Engineers Collaborative and is not to be copied in whole or in part. It is not to be used on any other project and is to be returned upon request. ©Planners and Engineers Collaborative

Du — DUST CONTROL ON DISTURBED AREAS

DEFINITION

Controlling surface and air movement of dust on construction sites, roads, and demolition sites.

CONDITIONS

This practice is applicable to areas subject to surface and air movement of dust where on and off-site property damage may occur without treatment.

METHOD AND MATERIALS

A. TEMPORARY METHODS

Mulches. See standard Ds1 - Disturbed Area Stabilization (With Mulching Only). Synthetic resins may be used instead of asphalt to bind mulch material. Refer to standard Tb-Tackifiers and Binders. Resins such as Curasol or Terratack should be used according to manufacturer's recommendations.

Vegetative Cover. See standard Ds2 - Disturbed Area Stabilization (With Temporary Seeding).

Spray-on Adhesives. These are used on mineral soils (not effective on muck soils.) Keep traffic off these areas. Refer to standard Tb-Tackifiers and Binders.

Tillage. This practice is designed to roughen and bring clods to the surface. It is an emergency measure which should be used before wind erosion starts. Begin plowing on windward side of site. Chisel-type plows spaced about 12 inches apart, spring-toothed harrows, and similar plows are examples of equipment which may produce the desired effect.

Irrigation. This is generally done as an emergency treatment. Site is sprinkled with water until the surface is wet. Repeat as needed.

Barriers. Solid board fences, snow fences, burlap fences, crate walls, bales of hay and similar material can be used to control air currents and soil blowing. Barriers placed at right angles to prevailing currents at intervals of about 15 times their height are effective in controlling wind erosion.

Calcium Chloride. Apply at rate that will keep surface moist. May need retreatment.

B. PERMANENT METHODS

Permanent Vegetation. See standard Ds3 - Disturbed Area Stabilization (With Permanent Vegetation). Existing trees and large shrubs may afford valuable protection if left in place.

Topsoiling. This entails covering the surface with less erosive soil material. See standard Tp - Topsoiling.

Stone. Cover surface with crushed stone or coarse gravel. See standard Cr - Construction Road Stabilization.

Ds1 — DISTURBED AREA STABILIZATION (WITH MULCHING ONLY)

DEFINITION

Applying plant residues or other suitable materials, produced on the site if possible, to the soil surface.

CONDITIONS

Mulch or temporary grassing shall be applied to all exposed areas within 14 days of disturbance. Mulch can be used as a singular erosion control device for up to six months, but it shall be applied at the appropriate depth, depending on the material used, anchored, and have a continuous 90% cover or greater of the soil surface. Maintenance shall be required to maintain appropriate depth and 90% cover. Temporary vegetation may be employed instead of mulch if the area will remain undisturbed for less than six months. if an area will remain undisturbed for greater than six months, permanent vegetative techniques shall be employed. Refer to Ds2, Ds3, and Ds4.

SPECIFICATIONS

MULCHING WITHOUT SEEDING
This standard applies to grades or cleared areas where seedings may not have a suitable growing season to produce an erosion retardant cover, but can be stabilized with a mulch cover.

SITE PREPARATION
1. Grade to permit the use of equipment for applying and anchoring mulch.
2. Install needed erosion control measures as required such as dikes, diversions, berms, terraces and sediment barriers.
3. Loosen compact soil to a minimum depth of 3 inches.

MULCHING MATERIALS
Select one of the following materials and apply at the depth indicated:
1. Dry straw or hay shall be applied t a depth of 2 to 4 inches providing complete soil coverage. One advantage of the material is easy application.
2. Wood waste (chips, sawdust or bark) shall be applied at a depth of 2 to 3 inches. Organic material from the clearing stage of development should remain on site, be chipped, and applied as mulch. This method of mulching can greatly reduce erosion control costs.
3. Polyethylene film shall be secured over banks or stockpiled soil material for temporary protection. This material can be salvaged and reused.

APPLYING MULCH
When mulch is used without seeding, mulch shall be applied to provide full coverage of the exposed area.

1. Dry Straw or hay mulch and wood chips shall be applied uniformly by hand or by mechanical equipment.
2. If the area will eventually be covered with perennial vegetation, 20-30 pounds of nitrogen per acre in addition to the normal amount shall be applied to offset the uptake of nitrogen caused by the decomposition of the organic mulches.
3. Apply polyethylene film on exposed areas.

ANCHORING MULCH
1. Straw or hay mulch can be pressed into the soil with a disk harrow with the disk set straight or with a special "packer disk." Disks may be smooth or serrated and should be 20 inches or more in diameter and 8 to 12 inches apart. The edges of the disk should be dull enough not to cut the mulch, but to press it into the soil leaving much of it in an erect position. Straw or hay mulch shall be anchored immediately after application.
Straw or hay mulch spread with special blower-type equipment may be anchored. Tackifiers, binders, and hydraulic mulch can be substituted for emulsified asphalt. Please refer to specification **Tac-Tackifiers**. Plastic mesh or netting with mesh no larger than one inch by one inch shall be installed according to manufacturer's specifications.
2. Netting of the appropriate size shall be used to anchor wood waste. Openings of the netting shall not be larger than the average size of the wood waste chips.
3. Polyethylene film shall be anchor trenched at the top as well as incrementally as necessary.

Ds2 — DISTURBED AREA STABILIZATION (WITH TEMPORARY SEEDING)

DEFINITION

The establishment of temporary vegetative cover with fast growing seedings for seasonal protection on disturbed or denuded areas.

CONDITIONS

Temporary grassing, instead of mulch, can be applied to rough graded areas that will be exposed for less than six months. Temporary vegetative measures should be coordinated with permanent measures to assure economical and effective stabilization. Most types of temporary vegetation are ideal to use as companion crops until the permanent vegetation is established.

SEEDING RATES FOR TEMPORARY SEEDING

SPECIES	RATE Per 1,000 sq.ft.	RATE Per Acre*	PLANTING DATES**
Rye	3.9 pounds	3 bu.	9/15-11/30
Ryegrass	0.9 pounds	40 lbs.	9/1-12/15
Annual Lespedeza	0.9 pounds	40 lbs.	3/1-3/31
Weeping Lovegrass	0.1 pounds	4 lbs.	4/1-5/31
Sudangrass	1.4 pounds	60 lbs.	5/1-7/31
Browntop Millet	0.9 pounds	40 lbs.	4/15-6/30
Wheat	4.1 pounds	3bu.	10/1-12/15

* Unusual site conditions may require heavier seeding rates.
** Seeding dates may need to be altered to fit temperature variations and conditions.

SPECIFICATIONS

GRADING AND SHAPING

Excessive water run-off shall be reduced by properly designed and installed erosion control practices such as closed drains, ditches, dikes, diversions, sediment barriers and others.

SEEDBED PREPARATION

When a hydraulic seeder is used, seedbed preparation is not required. When using conventional or handseeding, seedbed preparation is not required if the soil material is loose and not sealed by rainfall.

When soil has been sealed by rainfall or consists of smooth cut slopes, the soil shall be pitted, trenched or otherwise scarified to provide a place for seed to lodge and germinate.

LIME AND FERTILIZER

Agricultural lime is required unless soil tests indicate otherwise. Apply agricultural lime at a rate of one ton per acre. Graded areas require lime application. Soils can be tested to determine if fertilizer is needed. On reasonably fertile soils or soil material, fertilizer is not required. For soils with very low fertility, 500 to 700 pounds of 10-10-10 fertilizer or the equivalent per acre (12-16 lbs./1,000 sq. ft.) shall be applied. Fertilizer should be applied before land preparation and incorporated with a disk, ripper or chisel.

SEEDING

Select a grass or grass-legume mixture suitable to the area and season of the year. Seed shall be applied uniformly by hand, cyclone seeder, drill, cultipacker seeder, or hydraulic seeder (slurry including seed and fertilizer). Drill or cultipacker seeders should normally place seed one-quarter to one-half inch deep. Appropriate depth of planting is ten times the seed diameter. Soil should be "raked" lightly to cover seed with soil if seeded by hand.

MULCHING

Temporary vegetation can, in most places, be established without the use of mulch. Mulch without seeding should be considered for short term protection. Refer to Ds1 - Disturbed Area Stabilization (With Mulching Only).

IRRIGATION

During times of drought, water shall be applied at a rate not causing runoff and erosion. The soil shall be thoroughly wetted to a depth that will ensure germination of the seed. Subsequent applications should be made when needed.

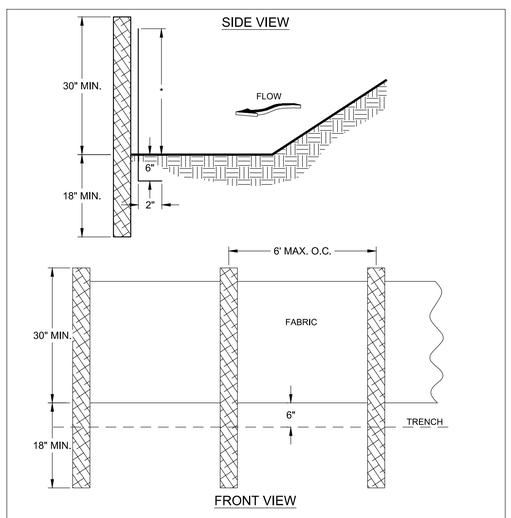

NOTES:
1. USE STEEL OR WOOD POSTS OR AS SPECIFIED BY THE EROSION, SEDIMENTATION, AND POLLUTION CONTROL PLAN.
2. HEIGHT (36") IS TO BE SHOWN ON THE EROSION, SEDIMENTATION, AND POLLUTION CONTROL PLAN.

Sd1-NS SILT FENCE - TYPE NON-SENSITIVE
N.T.S.

Sd2-F FABRIC AND SUPPORTING FRAME FOR INLET PROTECTION

STEEL FRAME AND SILT FENCE INSTALLATION

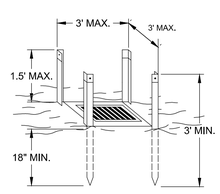

NOTES:
1. DESIGN IS FOR SLOPES NO GREATER THAN 5% (NOT DESIGNED FOR CONCENTRATED FLOWS).
2. THE STEEL POSTS SUPPORTING THE SILT FENCE MATERIAL SHOULD BE SPACED EVENLY AROUND THE PERIMETER OF THE INLET (MAXIMUM OF 3' APART).
3. THE STEEL POSTS SHOULD BE SECURELY DRIVEN AT LEAST 18" DEEP.
4. THE FABRIC SHOULD BE ENTRENCHED AT LEAST 12" AND THEN BACKFILLED WITH CRUSHED STONE OR COMPACTED SOIL.

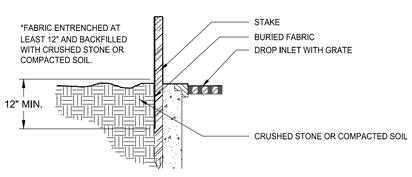

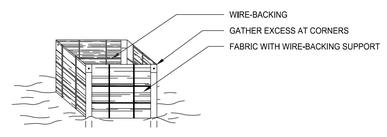

Sd2-P CURB INLET FILTER "PIGS IN BLANKET"

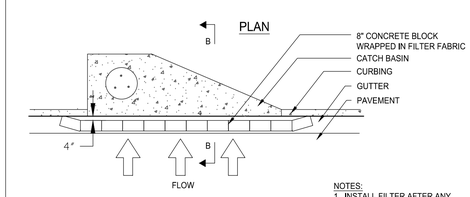

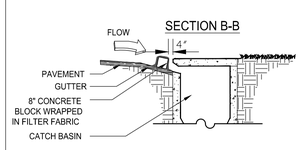

NOTES:
1. INSTALL FILTER AFTER ANY ASPHALT PAVEMENT INSTALLATION.
2. WRAP 8" CONCRETE BLOCKS IN FILTER FABRIC AND SPAN ACROSS CATCH BASIN INLET.
3. FACE OPENINGS IN BLOCKS OUTWARD.
4. LEAVE A GAP OF APPROXIMATELY 4 INCHES BETWEEN THE CURB AND THE FILTERS TO ALLOW FOR OVERFLOW TO PREVENT HAZARDOUS PONDING.
5. INSTALL OUTLET PROTECTION BELOW STORM DRAIN OUTLETS.

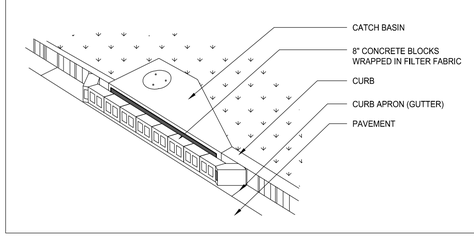

P: (770) 451-2741 F: (770) 451-3915
WWW.PEC.PLUS
PEC+ 60 YEARS
Planners & Engineers Collaborative+
LAND PLANNING + LANDSCAPE ARCHITECTURE + CIVIL ENGINEERING
ARBORISTS + SURVEYING & CONSTRUCTION + WATER RESOURCES
350 RESEARCH COURT STE 200
PEACHTREE CORNERS, GA 30092

PROJECT

RIVERDALE LIBRARY EXPANSION

AN EXPANSION DEVELOPMENT

AT

420 VALLEY HILL RD
RIVERDALE, GA 30274

FOR

GARDNER SPENCER SMITH TENCH & JARBEAU, P.C.
3340 PEACHTREE RD NE,
SUITE 1800
ATLANTA, GA 30326
P: 404.522.8805

REVISIONS

NO.	DATE	BY	DESCRIPTION

THIS SEAL IS ONLY VALID IF COUNTER SIGNED AND DATED WITH AN ORIGINAL SIGNATURE.

PRELIMINARY
NOT TO BE RELEASED FOR CONSTRUCTION

EROSION & SEDIMENT CONTROL DETAILS

SCALE: N/A
DATE: 06/20/2025
PROJECT: 24221.00

GRID NORTH
GEORGIA WEST ZONE

C9.00
SHEET

J:\2024\24221\0\Div\Plans\sheet\C9.00 - CONSTRUCTION DETAILS - 24221\00.dwg - cstewart - 6/20/2025 3:39 PM

This drawing is the property of Planners and Engineers Collaborative and is not to be copied in whole or in part. It is not to be used on any other project and is to be returned upon request. ©Planners and Engineers Collaborative

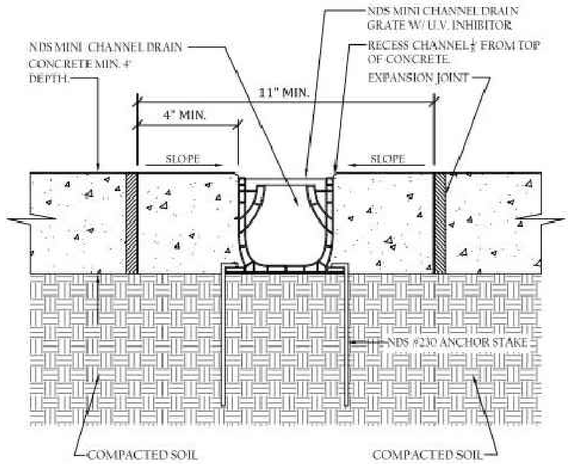

NDS MINI CHANNEL™ TYPICAL INSTALLATION.

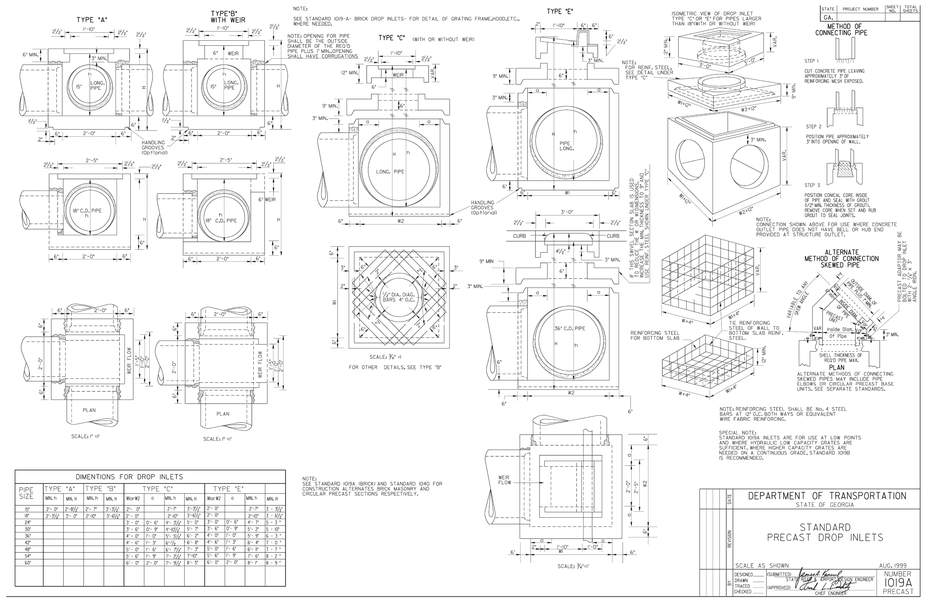

DIMENTIONS FOR DROP INLETS

PIPE SIZE	TYPE "A" WIN.	TYPE "A" WIN. H	TYPE "B" WIN.	TYPE "B" WIN. H	TYPE "C" Wu×W2	TYPE "C" G	TYPE "C" WIN.	TYPE "C" WIN. H	TYPE "E" Wu×W2	TYPE "E" G	TYPE "E" WIN.	TYPE "E" WIN. H
8"	2'-9"	2'-6½"	2'-7"	2'-3½"	2'-9"	2'-9"	2'-7"	2'-3½"	2'-9"	2'-9"	2'-7"	2'-3½"
9"	2'-9½"	3'-7"	2'-10"	3'-0½"	2'-9"	2'-9"	2'-10"	3'-4½"	2'-9"	2'-9"	2'-10"	3'-10½"
24"					3'-0"	2'-6½"	3'-3½"	5'-1"	3'-0"	2'-6½"	4'-7"	5'-5"
30"					3'-6"	2'-9"	4'-0½"	5'-7"	3'-6"	2'-9"	5'-2"	5'-10"
36"					4'-0"	1'-7"	5'-1½"	6'-2"	4'-0"	1'-7"	5'-9"	6'-3"
42"					4'-6"	1'-7"	6'-1½"	6'-8"	4'-6"	1'-7"	6'-4"	7'-0"
48"					5'-0"	1'-7"	6'-7½"	7'-1"	5'-0"	1'-7"	6'-9"	7'-7"
54"					5'-6"	1'-7"	7'-1½"	7'-6"	5'-6"	1'-7"	7'-6"	8'-1"
60"					6'-0"	2'-0"	7'-7½"	8'-0"	6'-0"	2'-0"	8'-1"	8'-9"

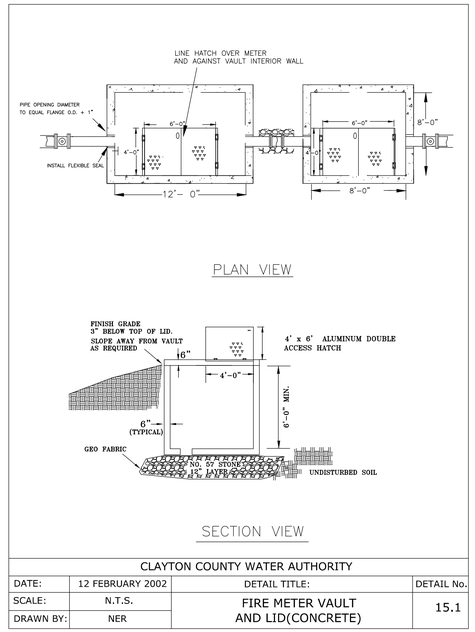

CLAYTON COUNTY WATER AUTHORITY			
DATE:	12 FEBRUARY 2002	DETAIL TITLE:	DETAIL No.
SCALE:	N.T.S.	FIRE METER VAULT AND LID(CONCRETE)	15.1
DRAWN BY:	NER		

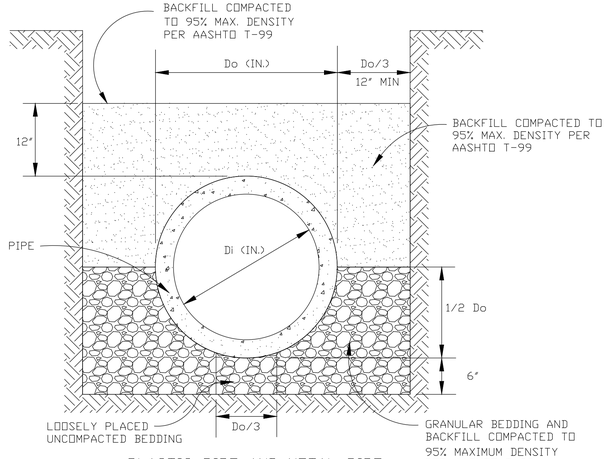

PLASTIC PIPE AND METAL PIPE

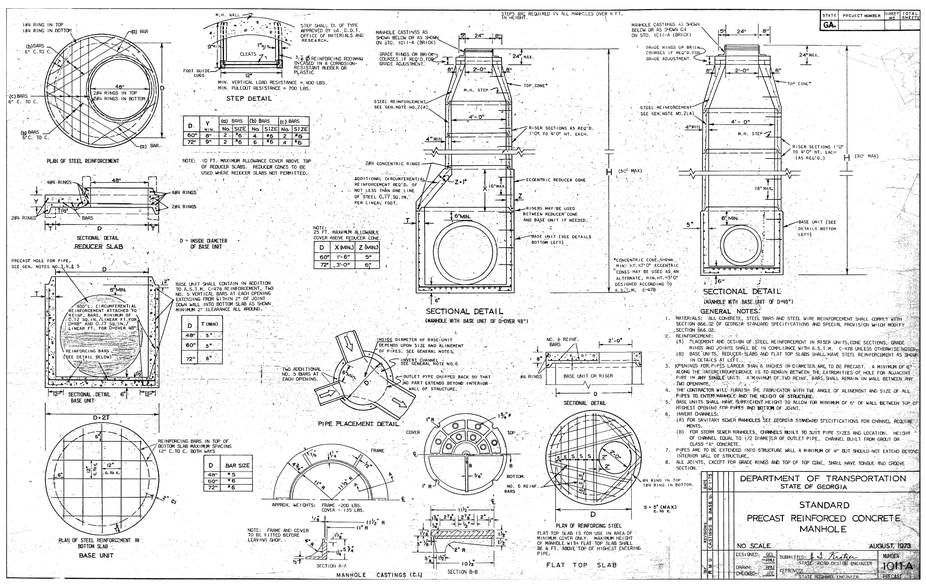

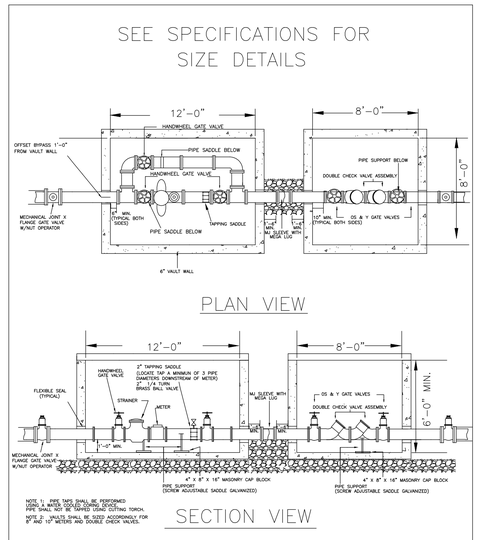

CLAYTON COUNTY WATER AUTHORITY			
DATE:	12 FEBRUARY 2002	DETAIL TITLE:	DETAIL No.
DATE MODIFIED:	21 NOVEMBER 2002	FIRE METER	14.1
SCALE:	N.T.S.		
DRAWN BY:	NER		

P: (770) 451-2741 F: (770) 451-3915
WWW.PEC.PLUS
PEC+ 60 YEARS
Planners & Engineers Collaborative+
LAND PLANNING + LANDSCAPE ARCHITECTURE + CIVIL ENGINEERING
ARBORISTS + SURVEYING & CONSTRUCTION + WATER RESOURCES
350 RESEARCH COURT STE 200
PEACHTREE CORNERS, GA 30092

PROJECT

RIVERDALE LIBRARY EXPANSION

AN EXPANSION DEVELOPMENT

AT

420 VALLEY HILL RD
RIVERDALE, GA 30274

FOR

GARDNER SPENCER SMITH TENCH & JARBEAU, P.C.
3340 PEACHTREE RD NE,
SUITE 1800
ATLANTA, GA 30326
P: 404.522.8805

REVISIONS

NO.	DATE	BY	DESCRIPTION

THIS SEAL IS ONLY VALID IF COUNTER SIGNED AND DATED WITH AN ORIGINAL SIGNATURE.

GEORGIA REGISTERED PROFESSIONAL ENGINEER No. 37096 MATTHEW E. KACZENSKI

GSWCC LEVEL II DESIGN PROFESSIONAL
CERTIFICATION # 0000066476 EXP. 06/27/2027

CONSTRUCTION DETAILS

SCALE: N/A
DATE: 02/11/2026
PROJECT: 24221.00

GRID NORTH
GEORGIA WEST ZONE

C9.01
SHEET

1 ADMINISTRATION

CLAYTON COUNTY LIBRARY SYSTEM - RIVERDALE BRANCH
420 VALLEY HILL RD.
RIVERDALE, GA 30274

SCOPE OF WORK

RIVERDALE LIBRARY NEW ADDITION CONSTRUCTION.

CODE REFERENCES

- INTERNATIONAL BUILDING CODE 2018 (WITH GEORGIA AMENDMENTS)
- INTERNATIONAL FIRE CODE 2018 (WITH GEORGIA AMENDMENTS)
- INTERNATIONAL MECHANICAL CODE 2018 (WITH GEORGIA AMENDMENTS)
- INTERNATIONAL PLUMBING CODE 2018 (WITH GEORGIA AMENDMENTS)
- INTERNATIONAL FUEL GAS CODE 2018 (WITH GEORGIA AMENDMENTS)
- NATIONAL ELECTRICAL CODE 2020 (WITH GEORGIA AMENDMENTS)
- INTERNATIONAL ENERGY CONSERVATION CODE 2015 (WITH GEORGIA AMENDMENTS)
- GEORGIA ACCESSIBILTY CODE (ADA GUIDELINES 2010 WITH GEORGIA AMENDMENTS)
- NFPA 101 2018 (WITH GEORGIA AMENDMENTS)
- NFPA 72 2018 (WITH GEORGIA AMENDMENTS)
- NFPA 13 2019 (WITH GEORGIA AMENDMENTS)

3 USE AND OCCUPANCY CLASSIFICATION

SECTION 303 ASSEMBLY GROUP A

303.4 ASSEMBLY GROUP A-3
ASSEMBLY GROUP A OCCUPANCY INCLUDES, AMONG OTHERS, THE USE OF A BUILDING OR STRUCTURE, OR A PORTION THEREOF, FOR GATHERING OF PERSONS FOR PURPOSES SUCH AS CIVIC, SOCIAL OR RELIGIOUS FUNCTIONS, RECREATION, FOOD OR DRINK CONSUMPTION OR AWAITING TRANSPORTATION.

5 GENERAL BUILDING HEIGHTS AND AREAS

SECTION 503 GENERAL BUILDING HEIGHT AND AREA LIMITATIONS

503.1 GENERAL
UNLESS OTHERWISE SPECIFICALLY MODIFIED IN CHAPTER 4 AND THIS CHAPTER, BUILDING HEIGHT, NUMBER OF STORIES AND BUILDING AREA SHALL NOT EXCEED THE LIMITS SPECIFIED IN SECTIONS 504 AND 506 BASED ON THE TYPE OF CONSTRUCTION AS DETERMINED BY SECTION 602 AND THE OCCUPANCIES AS DETERMINED BY SECTION 302 EXCEPT AS MODIFIED HEREAFTER. BUILDING HEIGHT, NUMBER OF STORIES AND BUILDING AREA PROVISIONS SHALL BE APPLIED INDEPENDENTLY. FOR THE PURPOSES OF DETERMINING AREA LIMITATIONS, HEIGHT LIMITATIONS AND TYPE OF CONSTRUCTION, EACH PORTION OF A BUILDING SEPARATED BY ONE OR MORE FIRE WALLS COMPLYING WITH SECTION 706 SHALL BE CONSIDERED TO BE A SEPARATE BUILDING.

SECTION 504 BUILDING HEIGHT AND NUMBER OF STORIES

BUILDING HEIGHT MODIFICATIONS: ASSEMBLY OCCUPANCY - SPRINKLERED				
	ALLOWABLE			ACTUAL
	OCUPANCY	TYPE VB, SPRINKLERED		
BUILDINGS 1	A	ALLOWABLE HEIGHT PER 504.3	70'-0"	21'-5"

SECTION 506 BUILDING AREA

506.2.4 MIXED-OCCUPANCY, MULTI-STORY BUILDINGS
EACH STORY OF A MIXED-OCCUPANCY BUILDING WITH MORE THAN ONE STORY ABOVE GRADE PLANE SHALL INDIVIDUALLY COMPLY WITH THE APPLICABLE REQUIREMENTS OF SECTION 508.1.

BUILDING AREA MODIFICATIONS: ASSEMBLY OCCUPANCY - SPRINKLERED			
	ALLOWABLE		ACTUAL
BUILDING 1	FRONTAGE INCREASE PER 506.3	If = Area factor increase due to frontage F= Building perimeter that fronts on a public way or open space having minimum distance of 20 feet P = Perimeter of entire building in feet W = Width of public way or open space (feet) in accordance with section 506.3.2 I= [F/P- .25]W/30 [213.8/731.7-0.25](71.75/30) [0.42-0.25](2.4) 0.41 I= 0.41	
	A OCCUPANCY	ALLOWABLE AREA PER 506.2 Aa = Allowable area (square feet) At = Tabular allowable area factor (NS, s13R, s13D, or SM value, as applicable) in accordance with Table 506.2 NS = Tabular allowable area factor in accordance with Table 506.2 for a nonsprinklered building (regardless of whether the building is sprinklered) If = Area factor increase due to frontage (percent) as calculated in accordance with Section 506.3 GROUP: A TYPE: VB A= 24,000 S1 NS= 6000 I= 0.41	ALLOWABLE AREA DETERMINATION PER 506.2.4 Aa=[At+(NS x If)] [24000 + (6000 x 0.41) [8460] Aa= 26,460 SF	FLOOR 1 = 3,576 SF (ADDITION ONLY) FLOOR 1 = 15,058 SF (TOTAL BUILDING)

6 TYPES OF CONSTRUCTION

SECTION 602 CONSTRUCTION CLASSIFICATION

602.5 TYPE VB
CONSTRUCTION IN WHICH THE STRUCTURAL ELEMENTS, EXTERIOR WALLS, AND INTERIOR WALLS ARE OF ANY MATERIALS PERMITTED BY THIS CODE.

TABLE 601 FIRE RESISTANCE RATING REQUIREMENTS FOR BUILDING ELEMENTS (HOURS)			
BUILDING ELEMENTS		REQUIRED	PROVIDED
STRUCTURAL FRAME COLUMNS, BEAMS, TRUSSES		0 HOUR	0 HOUR
BEARING WALLS	EXTERIOR	0 HOUR*	0 HOUR*
	INTERIOR	0 HOUR	0 HOUR
NON-BEARING WALLS	EXTERIOR	SEE TABLE 602	
	INTEROR	0 HOUR	0 HOUR
FLOOR CONSTRUCTION INCLUDING SUPPORTS		0 HOUR	0 HOUR
ROOF CONSTRUCTION INCUDING SUPPORTS		0 HOUR	0 HOUR
*NOT LESS THAN THE FIRE RESISTANCE RATING BASED ON FIRE SEPARATION DISTANCE (SEE TABLE 602)			

TABLE 602 FIRE RESISTANCE RATING REQUIREMENTS FOR EXTERIOR WALLS BASED ON FIRE SEPARATION DISTANCE		
DISTANCE	TYPE	GROUP A
< 5 FT	VB	1 HOUR
≥ 5 FT < 10 FT		1 HOUR
≥ 10 FT < 30 FT		0 HOUR
≥ 30 FT		0 HOUR

7 FIRE AND SMOKE PROTECTION FEATURES

SECTION 703 FIRE-RESISTANCE RATINGS AND FIRE TESTS

703.7 MARKING AND IDENTIFICATION
WHERE THEY ARE IN AN ACCESSIBLE CONCEALED FLOOR, FLOOR - CEILING OR ATTIC SPACE. FIRE WALLS, FIRE BARRIERS, FIRE PARTITIONS, SMOKE BARRIERS, AND SMOKE PARTITIONS OR ANY OTHER WALL REQUIRED TO HAVE PROTECTED OPENINGS OR PENETRATIONS SHALL BE EFFECTIVELY AND PERMANENTLY IDENTIFIED WITH SIGNS OR STENCILING IN THE CONCEALED SPACE. SUCH IDENTIFICATION SHALL:
1. BE LOCATED WITHIN 15 FEET OF THE END OF EACH WALL AND AT INTERVALS NOT EXCEEDING 30 FEET MEASURED HORIZONTALLY ALONG THE WALL OR PARTITION;
2. INCLUDE LETTERING NOT LESS THAN 3 INCHES IN HEIGHT WITH A MINIMUM 3/8 INCH STROKE IN A CONTRASTING COLOR INCORPORATING THE SUGGESTED WORDING "FIRE AND/OR SMOKE BARRIER - PROTECT ALL OPENINGS," OR OTHER WORDING.

SECTION 705 EXTERIOR WALLS

705.8.1 ALLOWABLE AREA OF OPENINGS
THE MAXIMUM AREA OF UNPROTECTED AND PROTECTED OPENINGS PERMITTED IN AN EXTERIOR WALL IN ANY STORY OF A BUILDING SHALL NOT EXCEED THE PERCENTAGES SPECIFIED IN TABLE 705.8.

TABLE 705.8 MAXIMUM AREA OF EXTERIOR WALL OPENINGS BASED ON FIRE SEPARATION DISTANCE AND DEGREE OF OPENING PROTECTION

FIRE SEPARATION DISTANCE (FEET)	DEGREE OF OPENNING PROTECTON	ALLOWABE AREA
0 TO LESS THAN 3	UNPROTECTED, SPRINKLERED	NOT PERMITTED
3 TO LESS THAN 5	UNPROTECTED, SPRINKLERED	15%
5 TO LESS THAN 10	UNPROTECTED, SPRINKLERED	25%
10 TO LESS THAN 15	UNPROTECTED, SPRINKLERED	45%
15 TO LESS THAN 20	UNPROTECTED, SPRINKLERED	75%
20 TO LESS THAN 25	UNPROTECTED, SPRINKLERED	NO LIMIT
25 TO LESS THAN 30	UNPROTECTED, SPRINKLERED	NO LIMIT
30 OR GREATER	UNPROTECTED, SPRINKLERED	NO LIMIT

8 INTERIOR FINISHES

SECTION 803 WALL AND CEILING FINISHES

803.1 GENERAL
INTERIOR WALL AND CEILING FINISH MATERIALS SHALL BE CLASSIFIED FOR THE FIRE PERFORMANCE AND SMOKE DEVELOPMENT IN ACCORDANCE WITH SECTION 803.1.1 OR 803.1.2, EXCEPT AS SHOWN IN SECTIONS 803.1.3 THROUGH 803.15.

TABLE 803.13 INTERIOR WALL AND CEILING FINISH REQUIREMENTS BY OCCUPANCY			
GROUP	SPRINKLERED		
	INTERIOR EXIT STAIRWAYS, INTERIOR EXIT RAMPS AND EXIT PASSAGEWAYS	CORRIDORS	ROOMS AND ENCLOSED SPACES
A-3	B	B	C
FLAME SPREAD INDEX SHALL BE LESS THAN 75 SMOKE GENERATION FACTOR SHALL BE LESS THAN 450			

9 FIRE PROTECTION SYSTEMS

SECTION 907 FIRE ALARM AND DETECTION SYSTEMS

NFPA 101: 12.3.4.1.1 - DETECTION, ALARM, AND COMMUNICATIONS SYSTEMS
ASSEMBLY OCCUPANCIES WITH OCCUPANT LOADS OF MORE THAN 300 SHALL BE PROVIDED WITH AN APPROVED FIRE ALARM SYSTEM IN ACCORDANCE WITH 9.6.1 AND 12.3.4 UNLESS OTHERWISE PERMITTED BY 12.3.4.1.2

10 MEANS OF EGRESS

SECTION 1004 OCCUPANT LOAD

(NFPA) TABLE 7.3.1.2 OCCUPANT LOAD FACTOR & (IBC) TABLE 1004.5 MAXIMUM FLOOR AREA ALLOWANCES PER OCCUPANT		
FUNCTION OF SPACE (USE)	FLOOR AREA (IN SF PER PERSON)	
	IBC TABLE 1004.1	NFPA TABLE 7.3.1.2
READING ROOMS	50 NSF	50 NSF
ASSEMBLY AREAS (E.G., MEETING ROOM) STANDING SPACE CONCENTRATED (CHAIRS ONLY--NOT FIXED UNCONCENTRATED (TABLES & CHAIRS)	 5 NSF 7 NSF 15 NSF	 -- 7NSF 15 NSF
BUSINESS AREAS	150 GSF	150 GSF
LIBRARY READING ROOMS STACK AREA	 50 NSF 100 GSF	 --
STORAGE / MECHANICAL AREAS	300 GSF	500 GSF

SECTION 1005 MEANS OF EGRESS SIZING

1005.1 GENERAL
ALL PORTIONS OF THE MEANS OF EGRESS SYSTEM SHALL BE SIZED IN ACCORDANCE WITH THIS SECTION.

1005.3 REQUIRED CAPACITY BASED ON OCCUPANT LOAD
THE REQUIRED CAPACITY, IN INCHES, OF THE EMANS OF EGRESS FOR ANY ROOM, AREA, SPACE OR STORY SHALL BE NOT LESS THAN THAT DETERMINED IN ACCORDANCE WITH SECTIONS 1005.3.1 AND 1005.3.2.
EXCEPTIONS:
1. FOR OTHER THAN GROUP H AND I-2 OCCUPANCIES, THE CAPACITY, IN INCHES, OF MEANS OF EGRESS STAIRWAYS SHALL BE CALCULATED BY MULTIPLYING THE OCCUPANT LOAD SERVED BY SUCH STAIRWAYS BY A MEANS OF EGRESS CAPACITY FACTOR OF 0.3 INCH PER OCCUPANT.

1005.3.2 OTHER EGRESS COMPONENTS
THE CAPACITY, IN INCHES, OF MEANS OF EGRESS COMPONENTS OTHER THAN STAIRWAYS SHALL BE CALCULATED BY MULTIPLYING THE OCCUPANT LOAD SERVED BY SUCH COMPONENT BY A MEANS OF EGRESS CAPACITY FACTOR OF 0.2 INCH PER OCCUPANT.

IBC SECTIONS 1005.3 / NFPA TABLE 7.3.3.1 0.2" PER OCCUPANT (LEVEL) 0.2" PER OCCUPANT (STAIRS, PER 1005.3.1 EXCEPTION 1)								
BUILDING 1	LEVEL	OCCUPANTS	LEVEL 0.2" PER OCC.		EXIT / ACCESS TO EXITS (1006.3.2)		STAIR 0.2" PER OCC. (1005.3.1)	
		TOTAL	REQ'D	PROV.	REQ'D	PROV.	REQ'D	PROV.
	FIRST FLOOR	191	38.2"	X	2	4	N/A	N/A
	TOTAL	191						

SECTION 1006 NUMBER OF EXITS AND EXIT ACCESS DOORWAYS

1006.2.1 EGRESS BEASED ON OCCUPANT LOAD AND COMMON PATH OF EGRESS TRAVEL DISTANCE
TWO EXITS OF EXIT ACCESS DOORWAYS FROM ANY SPACES SHALL BE PROVIDED WHERE THE DESIGN OCCUPANT LOAD OR THE COMMON PATH OF EGRESS TRAVEL DISTANCE EXCEEDS THE VALUES LISTED IN TABLE 1006.2.1.

TABLE 1006.2.1 SPACES WITH ONE EXIT OR EXIT ACCESS DOORWAY		
OCCUPANCY	MAXIMUM OCCUPANT LOAD OF SPACE	MAXIMUM COMMON PATH OF EGRESS TRAVEL DISTANCE (FEET)
		WITHOUT SPRINKLER SYSTEM
A3	49	75

NFPA 101: 13.2.5 - ARRANGEMENT OF MEANS OF EGRESS FOR EXISTING ASSEMBLY OCCUPANCIES
13.2.5.1.2 - COMMON PATH OF TRAVEL SHALL BE PERMITTED FOR THE FIRST 20 FT FROM ANY POINT WHERE THE COMMON PATH SERVES ANY NUMBER OF OCCUPANTS, AND FOR THE FIRST 75 FT FROM ANY POINT WHERE THE COMMON PATH SERVES NOT MORE THAN 50 OCCUPANTS.

13.2.5.1.3 - DEAD END CORRIDORS SHALL NOT EXCEED 20 FT.

NFPA 101: 14.2.5 - ARRANGEMENT OF MEANS OF EGRESS FOR NEW ASSEMBLY OCCUPANCIES

14.2.5.2 - NO DEAD END CORRIDOR SHALL EXCEED 20 FT OTHER THAN IN BUILDINGS PROTECTED THROUGHOUT BY AN APPROVED, SUPERVISED AUTOMATIC SPRINKLER SYSTEM IN ACCORDANCE WITH SECTION 9.7, IN WHICH CASE DEAD END CORRIDORS SHALL NOT EXCEED 50 FT.

14.2.5.3.2 - COMMON PATH OF TRAVEL SHALL NOT EXCEED 75 FT IN A BUILDING NOT PROTECTED THROUGHOUT BY AN APPROVED, SUPERVISED AUTOMATIC SPRINKLER SYSTEM IN ACCORDANCE WITH SECTION 9.7

14.2.5.4 - EVERY ROOM OR SPACE LARGER THAN 1000 SQUARE FEET OR WITH AN OCCUPANT LOAD OF MORE THAN 50 PERSONS SHALL COMPLY WITH THE FOLLOWING:
(1) THE ROOM OR SPACE SHALL HAVE A MINIMUM OF TWO EXIT ACCESS DOORS.
(2) THE DOORS REQUIRED BY 14.2.5.4(1) SHALL PROVIDE ACCESS TO SEPARATE EXITS.
(3) THE DOORS REQUIRED BY 14.2.5.4(1) SHALL BE PERMITTED TO OPEN ONTO A COMMON CORRIDOR, PROVIDED THAT SUCH CORRIDOR LEADS TO SEPARATE EXITS LOCATED IN OPPOSITE DIRECTIONS.

14.2.5.5 - EVERY ROOM THAT IS NORMALLY SUBJECT TO STUDENT OCCUPANCY SHALL HAVE AN EXIT ACCESS DOOR LEADING DIRECTLY TO AN EXIT ACCESS CORRIDOR OR EXIT, UNLESS OTHERWISE PERMITTED BY 14.2.5.5(1) OR 14.2.5.5(2)

SECTION 1007 EXIT AND EXIT ACCESS DOORWAY CONFIGURATION

1007.1.1 TWO EXITS OR EXIT ACCESS DOORWAYS
WHERE TWO EXITS, EXIT ACCESS DOORWAYS, EXIT ACCESS STAIRWAYS OF RAMPS, OR ANY COMBINATION THEREOF, ARE REQUIRED FROM ANY PORTION OF THE EXIT ACCESS, THEY SHALL BE PLACED A DISTANCE APART EQUAL TO NOT LESS THAN ONE HALF OF THE LENGTH OF THE MAXIMUM OVERALL DIAGONAL DIMENSION OF THE BUILDING OR AREA TO BE SERVED MEASURED IN A STRAIGHT LINE BETWEEN THEM. INTERLOCKING OR SCISSOR STAIRWAYS SHALL BE COUNTED AS ONE EXIT STAIRWAY.

SECTION 1014 HANDRAILS

1009.3 STAIRWAYS
1009.3.2 STAIRWAY WIDTH
STAIRWAYS SHALL HAVE A CLEAR WIDTH OF 48 INCHES MINIMUM BETWEEN HANDRAILS.
EXCEPTIONS:
1. THE CLEAR WIDTH OF 48 INCHES BETWEEN HANDRAILS IS NOT REQUIRED IN BUILDINGS EQUIPPED THROUGHOUT WITH AN AUTOMATIC SPRINKLER SYSTEM INSTALLED IN ACCORDANCE WITH SECTION 903.1.1 OR 903.3.3.

SECTION 1017 EXIT ACCESS TRAVEL DISTANCE

1017.2 LIMITATIONS
EXIT ACCESS TRAVEL DISTANCE SHALL NOT EXCEED THE VALUES GIVEN IN TABLE 1017.2.

TABLE 1017.2 EXIT ACCESS TRAVEL DISTANCE	
OCCUPANCY	WITH SPRINKLER SYSTEM
A, E, F-1, M, R, S-1	250[0] FEET

SECTION 1020 CORRIDORS

1020.1 CONSTRUCTION
CORRIDORS SHALL BE FIRE-RESISTANCE RATED IN ACCORDANCE WITH TABLE 1020.1

TABLE 1020.1 CORRIDOR FIRE-RESISTANCE RATING		
OCCUPANCY	OCCUPANT LOAD SERVED BY CORRIDOR	REQUIRED FIRE-RESISTANCE RATING (HOURS) WITH SPRINKLER SYSTEM
A, B, E, F, M, S, U	GREATER THAN 30	0 HOURS

1020.2 WIDTH AND CAPACITY
THE REQUIRED WIDTH AND CAPACITY OF CORRIDORS SHALL BE DETERMINED AS SPECIFIED IN SECTION 1005.1, BUT THE MINIMUM WIDTH SHALL NOT BE LESS THAN THAT SPECIFIED IN TABLE 1020.2.

TABLE 1020.2 MINIMUM CORRIDOR WIDTH	
OCCUPANCY	MINIMUM WIDTH (INCHES)
ANY FACILITY NOT LISTED BELOW.	44
WITH AN OCCUPANT LOAD OF LESS THAN 50.	36

SECTION 1028 EXIT DISCHARGE

1028.1 GENERAL
EXITS SHALL DISCHARGE DIRECTLY TO THE EXTERIOR OF THE BUILDING. THE EXIT DISCHARGE SHALL BE AT GRADE OR SHALL PROVIDE A DIRECT PATH OF EGRESS TRAVEL TO GRADE. THE EXIT DISCHARGE SHALL NOT REENTER A BUILDING. THE COMBINED USE OF EXCEPTIONS 1 AND 2 SHALL NOT EXCEED 50 PERCENT OF THE NUMBER AND MINIMUM WIDTH OR REQUIRED CAPACITY OF THE REQUIRED EXITS.

EXCEPTIONS:
1. NOT MORE THAN 50 PERCENT OF THE NUMBER AND MINIMUN WIDTH OR REQUIRED CAPACITY OF INTERIOR EXIT STAIRWAYS AND RAMPS IS PERMITTED TO EGRESS THROUGH AREAS ON THE LEVEL OF DISCHARGE.

13 ENERGY EFFICIENCY

SECTION 1301 GENERAL

1301.1.1 CRITERIA
BUILDINGS SHALL BE DESIGNED AND CONSTRUCTED IN ACCORDANCE WITH THE INTERNATIONAL ENERGY CONSERVATION CODE.

IECC TABLE C402.1.3		
	CLIMATE ZONE: 3A	
	REQUIRED	PROPOSED
ROOFS (INSULATION ENTIRELY ABOVE DECK)	R-25ci	R-25ci
WALLS, ABOVE GRADE (MASS)	R-7.6ci	R-11ci
WALLS, ABOVE GRADE (METAL FRAMED)	R-13 + R-7.5ci	R-19 + R-11ci
SLAB ON GRADE (UNHEATED SLABS)	NR	NR
ci = CONTINUOUS INSULATION		

29 PLUMBING SYSTEMS

PLUMBING FIXTURE DISTRIBUTION PER I.P.C. MINIMUM PLUMBING FIXTURE REQUIREMENTS

FLOOR	LOAD	TOTAL NO. OF PEOPLE PER FLOOR	PLUMBING FIXTURES REQUIRED / PLUMBING FIXTURES PROVIDED				
			FEMALE		MALE		
			W.C.	LAVATORIES	W.C.	URINALS	LAVATORIES
1	390	195 MALE 195 FEMALE	3 / 6	1 / 4	2 / 4	0 / 2	1 / 4

DRINKING FOUNTAIN DISTRIBUTION MINIMUM REQUIREMENTS:
INTERNATIONAL PLUMBING CODE REQUIRES:
TOTAL = 1 REQUIRED / 1 WATER COOLER PROVIDED
SERVICE SINKS: 1 REQUIRED / 1 PROVIDED

CLAYTON COUNTY LIBRARY SYSTEM

RIVERDALE LIBRARY ADDITION

420 Valley Hill Rd, Riverdale, GA 30274

© 2025 - THESE DOCUMENTS REMAIN THE PROPERTY OF THE ARCHITECT AND MAY NOT BE USED OR REPRODUCED WITHOUT WRITTEN PERMISSION.

RELEASED FOR CONSTRUCTION

Revisions

No.	Date	Description
	8/29/25	Issued for Permit

GEORGIA REGISTERED No. 3072 PROFESSIONAL ARCHITECT JOSEPH QUENTIN GARDNER JR.

Gardner Spencer Smith Tench & Jarbeau
A Professional Corporation for the Practice of Architecture
www.gsstj.com

Tower Place Building,
3340 Peachtree Road, N.E.
Suite 1800
Atlanta, Georgia 30326
404.522.8805
404.521.2118 (f)

PROJECT NO.
24105

SHEET TITLE
CODE ANALYSIS

SHEET NO.
A0.01

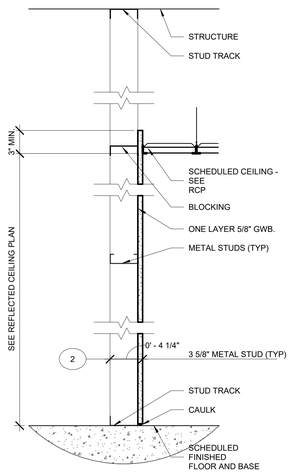

2 FURRING 1 1/2" = 1'-0"

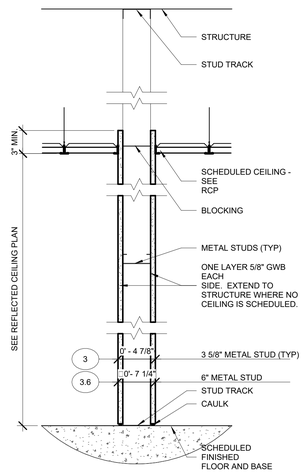

3 PARTITION 1 1/2" = 1'-0"

GENERAL NOTES, PARTITIONS:

1. CONTRACTOR SHALL PERMANENTLY IDENTIFY ALL FIRE-RESISTANCE-RATED WALLS (AND CORRESPONDING FIRE-RESISTANCE RATING) INCLUDING FIRE BARRIER WALLS, SMOKE BARRIER WALLS, FIRE PARTITIONS, FIRE WALLS, AND SHAFT ENCLOSURES BY INSTALLING SIGNS OR BY STENCILING IN CONCEALED SPACES THE FOLLOWING:

1 & 2 HOUR FIRE AND SMOKE BARRIER - PROTECT ALL OPENINGS

IDENTIFICATION SHALL BE SPACED NO MORE THAN TWELVE (12) FEET ON CENTER WITH A MINIMUM LETTER SIZE OF TWO (2) INCHES IN HEIGHT ON A CONTRASTING BACKGROUND.

2. EXTEND AND ANCHOR ALL STUD FRAMING TO STRUCTURE ABOVE, TYPICAL UNLESS NOTED OTHERWISE.

3. MAINTAIN HORIZONTAL CONTINUITY OF FIRE RATED FLOOR-CEILING AND ROOF-CEILING FIRE RATED ASSEMBLIES OVER TOP OF PARTITIONS, TYPICALLY.

4. WHERE NO CEILING IS SCHEDULED, EXTEND GWB. TO UNDERSIDE OF FLOOR OR ROOF DECK ABOVE.

5. WHEN PIPING IS PRESENT IN PARTITION, INSTALL 3" BATT INSULATION ON BOTH SIDES OF PIPING.

GENERAL NOTES, SOUND ISOLATION PARTITIONS:

1. ALL PARTITIONS DESIGNATED AS SOUND ISOLATION PARTITIONS SHALL RECEIVE ACOUSTICAL SEALANT FOR THE ENTIRE PERIMETER OF THE PARTITION, INCLUDING TOP, SIDES AND CORNERS, UNLESS SIMILARLY SEALED FOR OTHER REASONS, SUCH AS FIRE RESISTANCE.

2. ALL PARTITIONS DESIGNATED AS SOUND ISOLATION PARTITIONS SHALL RECEIVE ACOUSTICAL SEALANT AT ALL PENETRATIONS WHICH ARE NOT OTHERWISE SEALED AIR TIGHT.

3. WHERE BATT INSULATION IS SCHEDULED IN A PARTITION, THE THICKNESS OF THE BATTS SHALL BE THE LARGEST STANDARD THICKNESS THAT CAN BE CONTAINED WITHIN THE DEPTH OF THE SCHEDULED STUD CAVITY.

4. WHERE BATT INSULATION IS SCHEDULED IN A SOUND ISOLATION PARTITION, CUT BATTS 1" WIDER THAN STUD SPACING AND CREASE TO FIT IN CAVITY, TYPICALLY.

IF DECIMALIZED, THE NUMBER FOLLOWING THE DECIMAL INDICATES NOMINAL STUD OR BLOCK SIZE PER THE FOLLOWING:

THE FIRST NUMBER INDICATES PARTITION TYPE. SEE CORRESPONDING DETAIL ON PARTITION DETAIL SHEET.

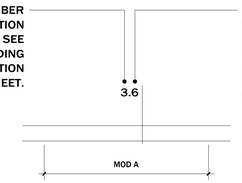

(NONE) = 3 5/8" STUD
1 = 1 5/8" STUD
2 = 2 1/2" STUD
4 = 4" STUD
6 = 6" STUD
8 = 8" STUD
10 = 10" STUD

(NONE) = 8" BLOCK
4 = 4" BLOCK
6 = 6" BLOCK
12 = 12" BLOCK

MODIFICATIONS AND THEIR EXTENT ARE INDICATED BY LETTER. SEE THE CORRESPONDING DETAIL ON THE PARTITION DETAILS SHEET.

Partition Legend and Notes

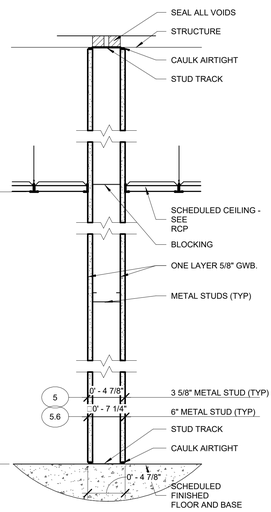

5 FULL HEIGHT PARTITION 1 1/2" = 1'-0"

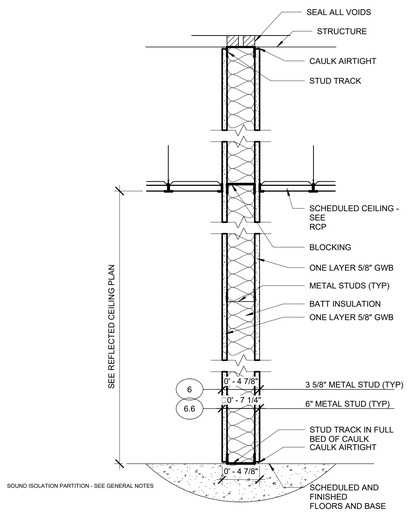

6 INSULATED PARTITION 1 1/2" = 1'-0"

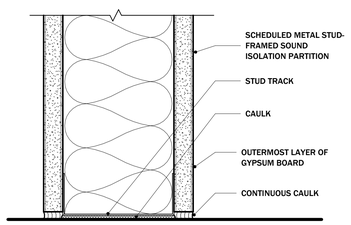

METAL STUD TRACKS WITHIN A PARTITION DESIGNATED AS A SOUND ISOLATION PARTITION SHALL BE SET IN A FULL BED OF CAULK PRIOR TO ANCHORING.

7 Detail A N.T.S.

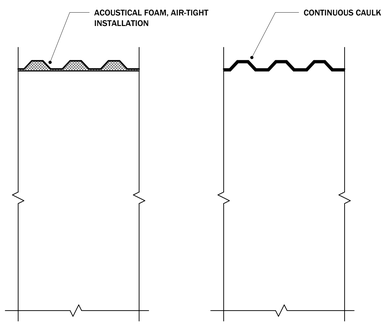

INTERIOR PARTITIONS DESIGNATED AS SOUND ISOLATION PARTITIONS SHALL BE CUT TO FIT TIGHTLY TO IRREGULAR FLOOR DECKS ABOVE AND CAULKED. ALTERNATELY, VOIDS MAY BE FILLED WITH ACOUSTICAL FOAM IN AN AIR-TIGHT INSTALLATION.

8 Detail B N.T.S.

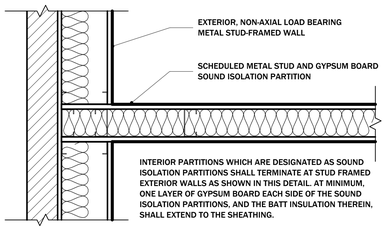

INTERIOR PARTITIONS WHICH ARE DESIGNATED AS SOUND ISOLATION PARTITIONS SHALL TERMINATE AT STUD FRAMED EXTERIOR WALLS AS SHOWN IN THIS DETAIL. AT MINIMUM, ONE LAYER OF GYPSUM BOARD EACH SIDE OF THE SOUND ISOLATION PARTITIONS, AND THE BATT INSULATION THEREIN, SHALL EXTEND TO THE SHEATHING.

EXCEPTION: WHEN THE EXTERIOR WALL IS REQUIRED TO BE FIRE RESISTANCE RATED AND THE INTERSECTING SOUND ISOLATION PARTITION HAS NO SUCH REQUIREMENT, THE NON-RATED PARTITION SHALL NOT INTERRUPT THE RATED WALL.

9 Plan Detail A N.T.S.

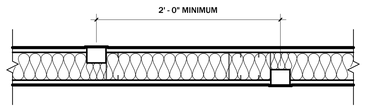

ELECTRICAL DEVICES PENETRATING OPPOSITE FACES OF AN INTERIOR PARTITION WHICH IS DESIGNATED AS A SOUND ISOLATION PARTITION SHALL BE SEPARATED HORIZONTALLY FROM ONE ANOTHER AS SHOWN IN THIS DETAIL.

10 Plan Detail B N.T.S.

CLAYTON COUNTY LIBRARY SYSTEM

RIVERDALE LIBRARY ADDITION

420 Valley Hill Rd, Riverdale, GA 30274

© 2025 - THESE DOCUMENTS REMAIN THE PROPERTY OF THE ARCHITECT AND MAY NOT BE USED OR REPRODUCED WITHOUT WRITTEN PERMISSION.

RELEASED FOR CONSTRUCTION

Revisions

No.	Date	Description
	8/29/25	Issued for Permit

GEORGIA REGISTERED No. 3072 PROFESSIONAL ARCHITECT JOHN CONN GARDNER JR.

Gardner Spencer Smith Tench & Jarbeau
A Professional Corporation for the Practice of Architecture
www.gsstj.com

Tower Place Building,
3340 Peachtree Road, N.E.
Suite 1800
Atlanta, Georgia 30326
404.522.8805
404.521.2118 (f)

PROJECT NO.
24105

SHEET TITLE
PARTITION DETAILS

SHEET NO.
A0.60

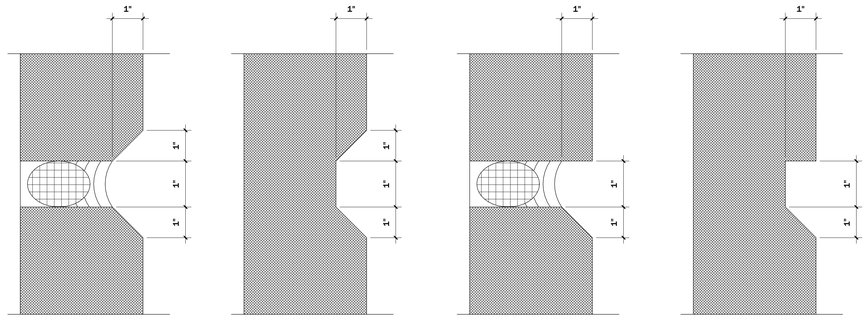

1 EIFS JOINT DETAILS 12" = 1'-0"

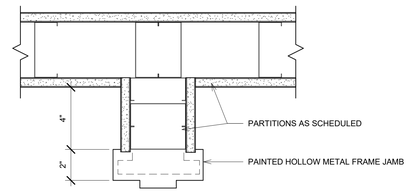

2 TYPICAL CORNER DOOR JAMB DETAIL 3" = 1'-0"

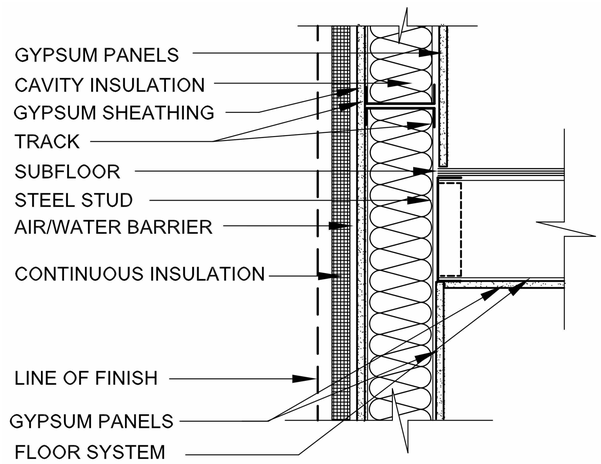

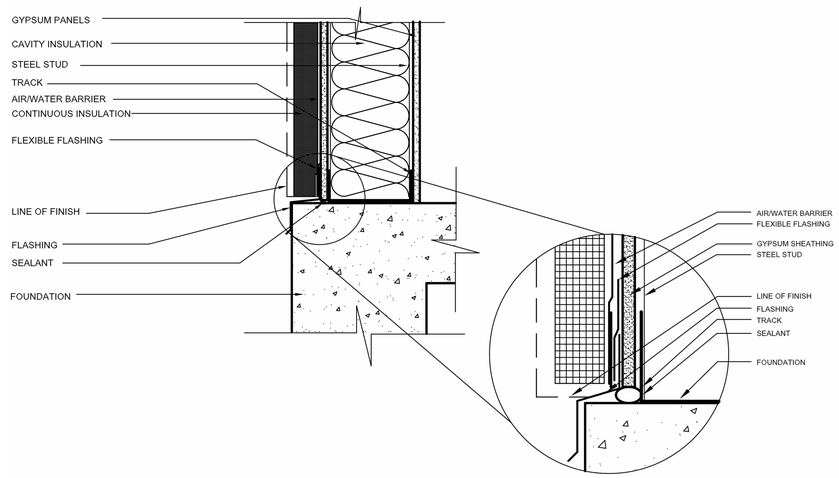

CLAYTON COUNTY LIBRARY SYSTEM

RIVERDALE
LIBRARY
ADDITION

420 Valley Hill
Rd, Riverdale,
GA 30274

© 2025. THESE DOCUMENTS REMAIN THE PROPERTY OF THE ARCHITECT AND MAY NOT BE USED OR REPRODUCED WITHOUT WRITTEN PERMISSION.

RELEASED FOR CONSTRUCTION

Revisions

No.	Date	Description
	8/29/25	Issued for Permit

GEORGIA REGISTERED No. 3072 PROFESSIONAL ARCHITECT JOSEPH CONN GARDNER, JR.

Gardner
Spencer
Smith
Tench &
Jarbeau

A Professional Corporation
for the Practice of Architecture

www.gsstj.com

Tower Place Building,
3340 Peachtree Road, N.E.
Suite 1800
Atlanta, Georgia 30326
404.522.8805
404.521.2118 (f)

PROJECT NO.
24105

SHEET TITLE
WALL DETAILS

SHEET NO.
A0.62

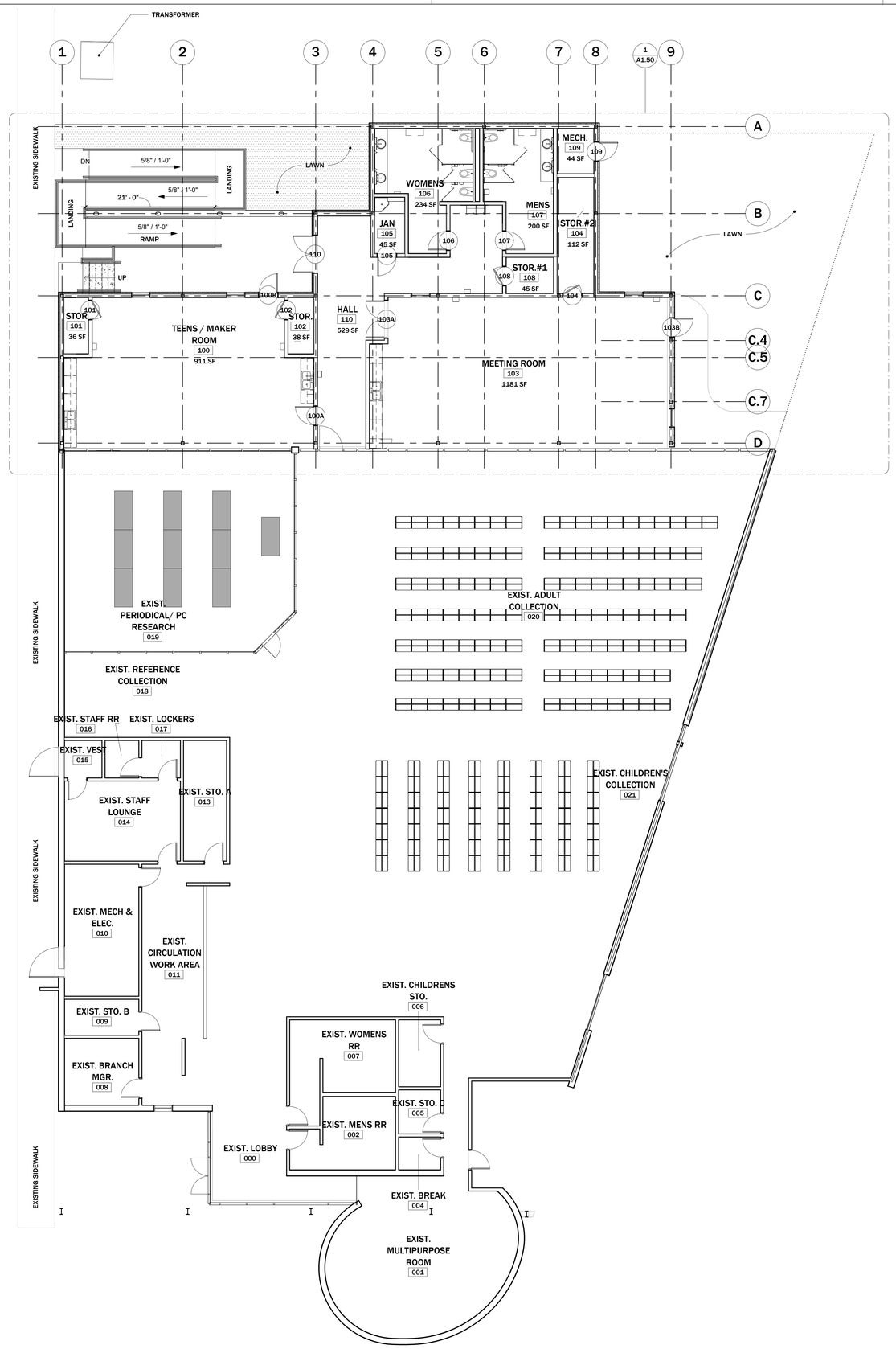

1 ARCHITECTURAL ADDITION PLAN

1/8" = 1'-0"

CLAYTON COUNTY LIBRARY SYSTEM

RIVERDALE LIBRARY ADDITION

420 Valley Hill Rd, Riverdale, GA 30274

© 2025 - THESE DOCUMENTS REMAIN THE PROPERTY OF THE ARCHITECT AND MAY NOT BE USED OR REPRODUCED WITHOUT WRITTEN PERMISSION.

RELEASED FOR CONSTRUCTION

Revisions

No.	Date	Description
	8/29/25	Issued for Permit

GEORGIA REGISTERED No. 3072 PROFESSIONAL ARCHITECT JOSEPH LYNN GARDNER, JR.

Gardner Spencer Smith Tench & Jarbeau
A Professional Corporation for the Practice of Architecture
www.gsstj.com

Tower Place Building,
3340 Peachtree Road, N.E.
Suite 1800
Atlanta, Georgia 30326
404.522.8805
404.521.2118 (f)

PROJECT NO.
24105

SHEET TITLE
OVERALL FLOOR PLAN

SHEET NO.
A1.11

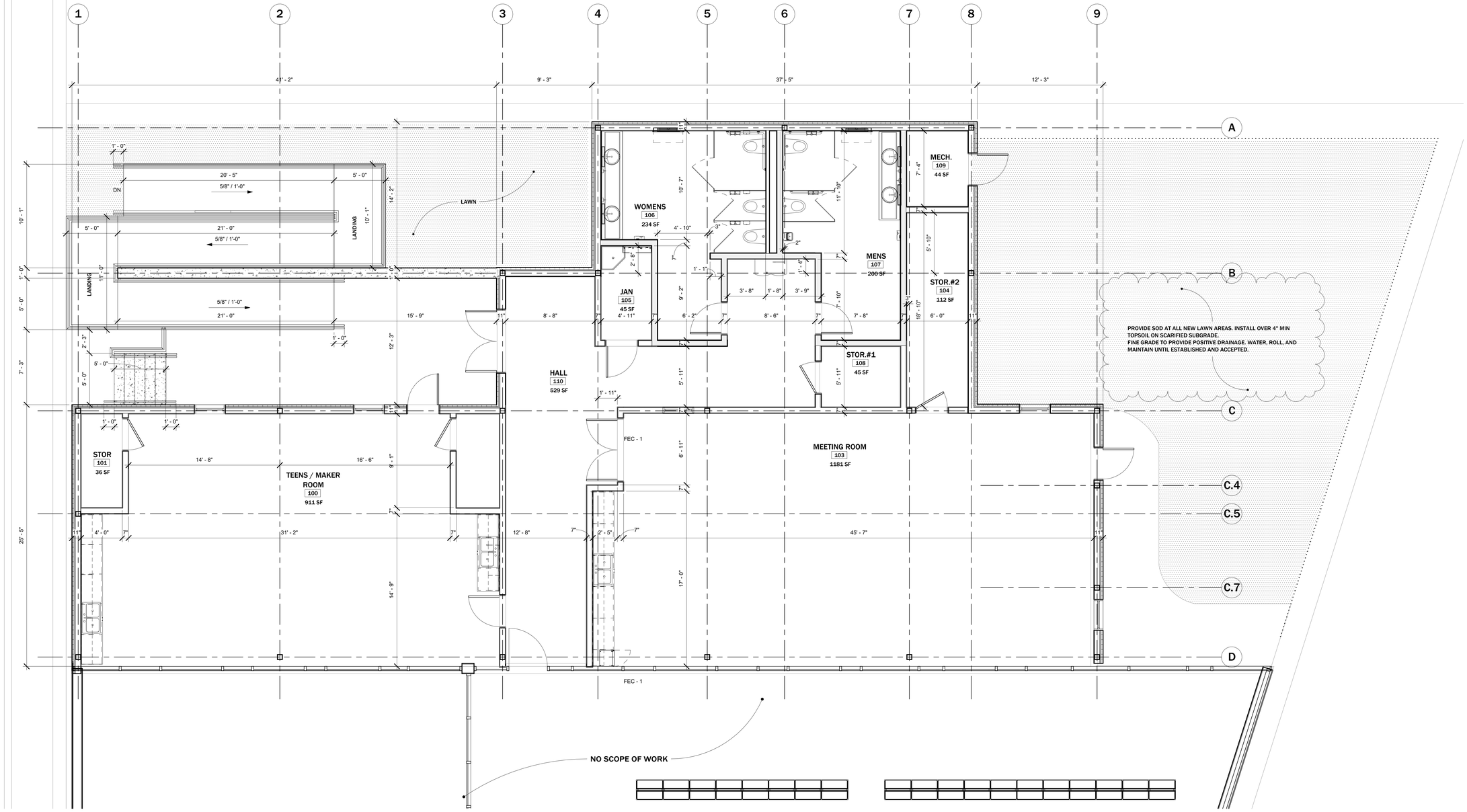

1 ARCHITECTURAL DIMENSION PLAN

1/4" = 1'-0"

CLAYTON COUNTY LIBRARY SYSTEM

RIVERDALE LIBRARY ADDITION

420 Valley Hill Rd, Riverdale, GA 30274

© 2025. THESE DOCUMENTS REMAIN THE PROPERTY OF THE ARCHITECT AND MAY NOT BE USED OR REPRODUCED WITHOUT WRITTEN PERMISSION.

RELEASED FOR CONSTRUCTION

Revisions

No.	Date	Description
	8/29/25	Issued for Permit
2	3/6/26	Revision 2

GEORGIA REGISTERED No. 3072 PROFESSIONAL ARCHITECT JOSEPH GLENN GARDNER JR.

Gardner Spencer Smith Tench & Jarbeau
A Professional Corporation for the Practice of Architecture
www.gsstj.com

Tower Place Building,
3340 Peachtree Road, N.E.
Suite 1800
Atlanta, Georgia 30326
404.522.8805
404.521.2118 (f)

PROJECT NO.
24105

SHEET TITLE
DIMENSION PLAN - ADDITION

SHEET NO.
A1.20

RCP LEGEND

CEILING MATERIAL LEGEND

- A GYPSUM BOARD CEILING ON METAL STUD
- B ACOUSTICAL CEILING TYPE ACT-1
- C EXTERIOR GRADE GYPSUM BOARD CEILING
- E EXPOSED CEILING

MATERIAL → A 1' - 0" ← HEIGHT A.F.F., U.N.O.

- 24" X 24" SUPPLY DIFFUSER
- 24" X 24" RETURN REGISTER
- 48" LINEAR PENDANT FIXTURE SUSPENDED FROM STRUCTURE
- RECESSED INTERIOR GRADE DOWNLIGHT
- 2' X 2' RECESSED LED TROFFER
- 2' X 4' RECESSED LED TROFFER
- 2' X 2' RECESSED LED TROFFER ON EMERGENCY CIRCUIT
- 2' X 4' RECESSED LED TROFFER ON EMERGENCY CIRCUIT
- CEILING MOUNTED SPEAKER
- CEILING MOUNTED SINGLE FACE EXIT SIGN
- WALL MOUNTED SINGLE FACE EXIT SIGN
- CEILING MOUNTED DOUBLE FACE EXIT SIGN WITH ARROWS
- 3.3" CEILING MOUNTED ADJUSTABLE PENDANT CYLINDER DOWNLIGHT FIXTURE
- RECESSED CEILING MOUNTED SPRINKLER

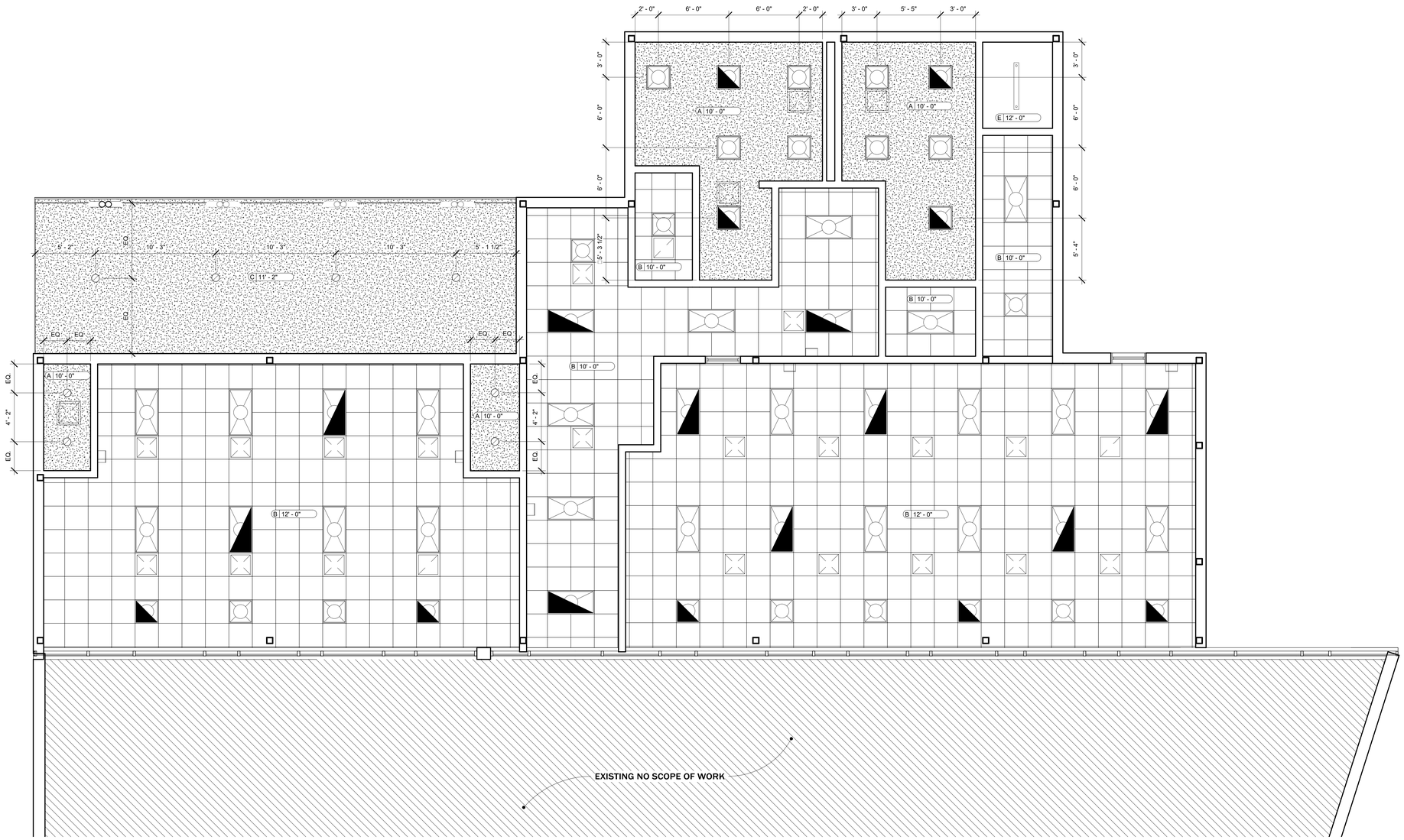

1 REFLECTED CEILING PLAN

1/4" = 1'-0"

CLAYTON COUNTY LIBRARY SYSTEM

RIVERDALE LIBRARY ADDITION

420 Valley Hill Rd, Riverdale, GA 30274

© 2025 THESE DOCUMENTS REMAIN THE PROPERTY OF THE ARCHITECT AND MAY NOT BE USED OR REPRODUCED WITHOUT WRITTEN PERMISSION.

RELEASED FOR CONSTRUCTION

Revisions

No.	Date	Description
	8/29/25	Issued for Permit

GEORGIA REGISTERED No. 3072 PROFESSIONAL ARCHITECT JOHN LOUIS GLENN GARDNER JR.

Gardner Spencer Smith Tench & Jarbeau
A Professional Corporation for the Practice of Architecture
www.gsstj.com

Tower Place Building,
3340 Peachtree Road, N.E.
Suite 1800
Atlanta, Georgia 30326
404.522.8805
404.521.2118 (f)

PROJECT NO.
24105

SHEET TITLE
REFLECTED CEILING PLAN - ADDITION

SHEET NO.
A1.31

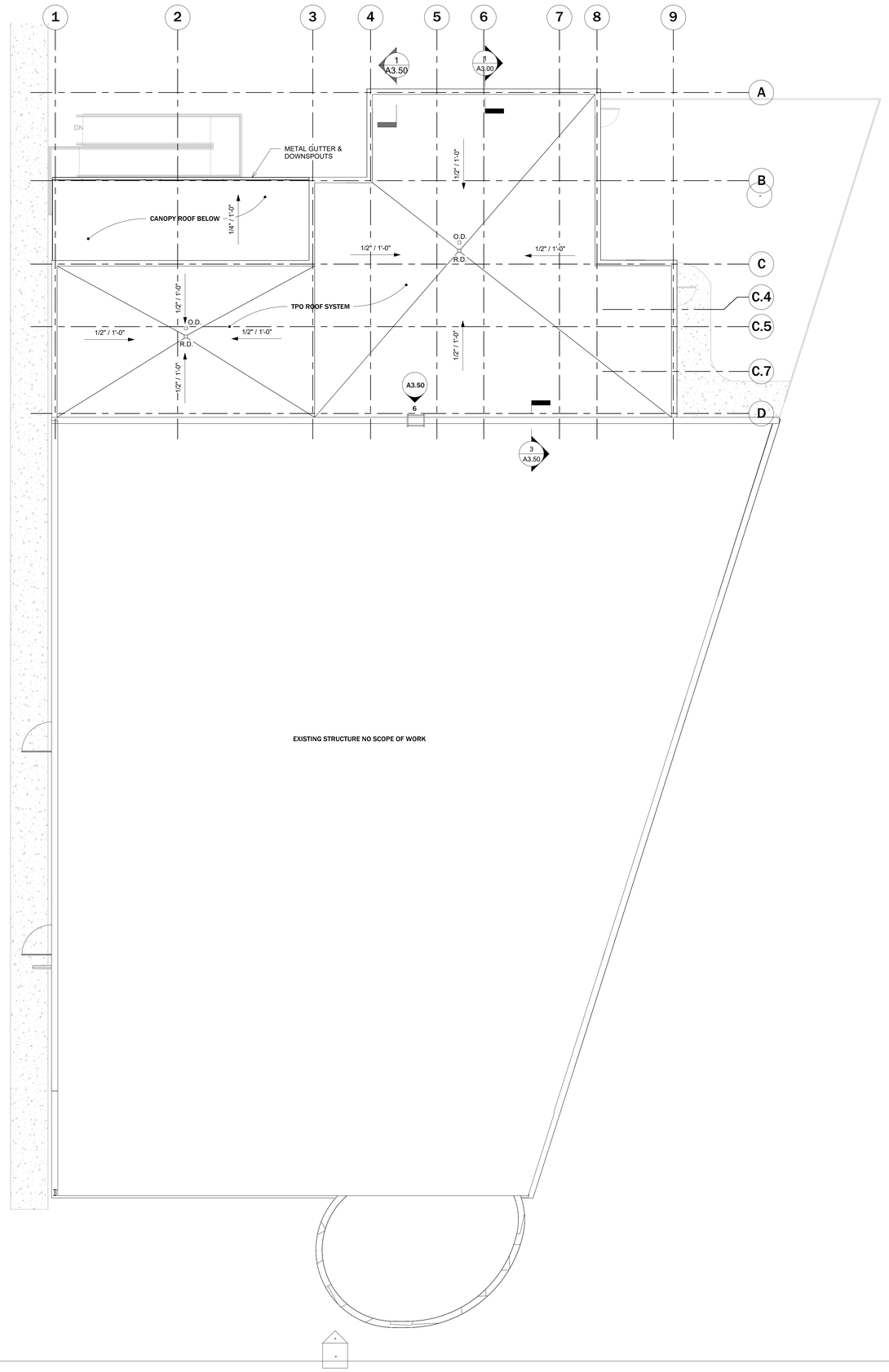

1 ROOF PLAN ADDITION

1/8" = 1'-0"

CLAYTON COUNTY LIBRARY SYSTEM

RIVERDALE
LIBRARY
ADDITION

420 Valley Hill
Rd, Riverdale,
GA 30274

© 2025. THESE DOCUMENTS REMAIN THE PROPERTY OF THE ARCHITECT AND MAY NOT BE USED, OR REPRODUCED WITHOUT WRITTEN PERMISSION.

RELEASED FOR CONSTRUCTION

Revisions

No.	Date	Description
	8/29/25	Issued for Permit

GEORGIA REGISTERED No. 3072 PROFESSIONAL ARCHITECT JOHN GLENN GARDNER, JR.

Gardner
Spencer
Smith
Tench &
Jarbeau

A Professional Corporation
for the Practice of Architecture

www.gsstj.com

Tower Place Building,
3340 Peachtree Road, N.E.
Suite 1800
Atlanta, Georgia 30326
404.522.8805
404.521.2118 (f)

PROJECT NO.
24105

SHEET TITLE
ROOF PLAN

SHEET NO.
A1.40

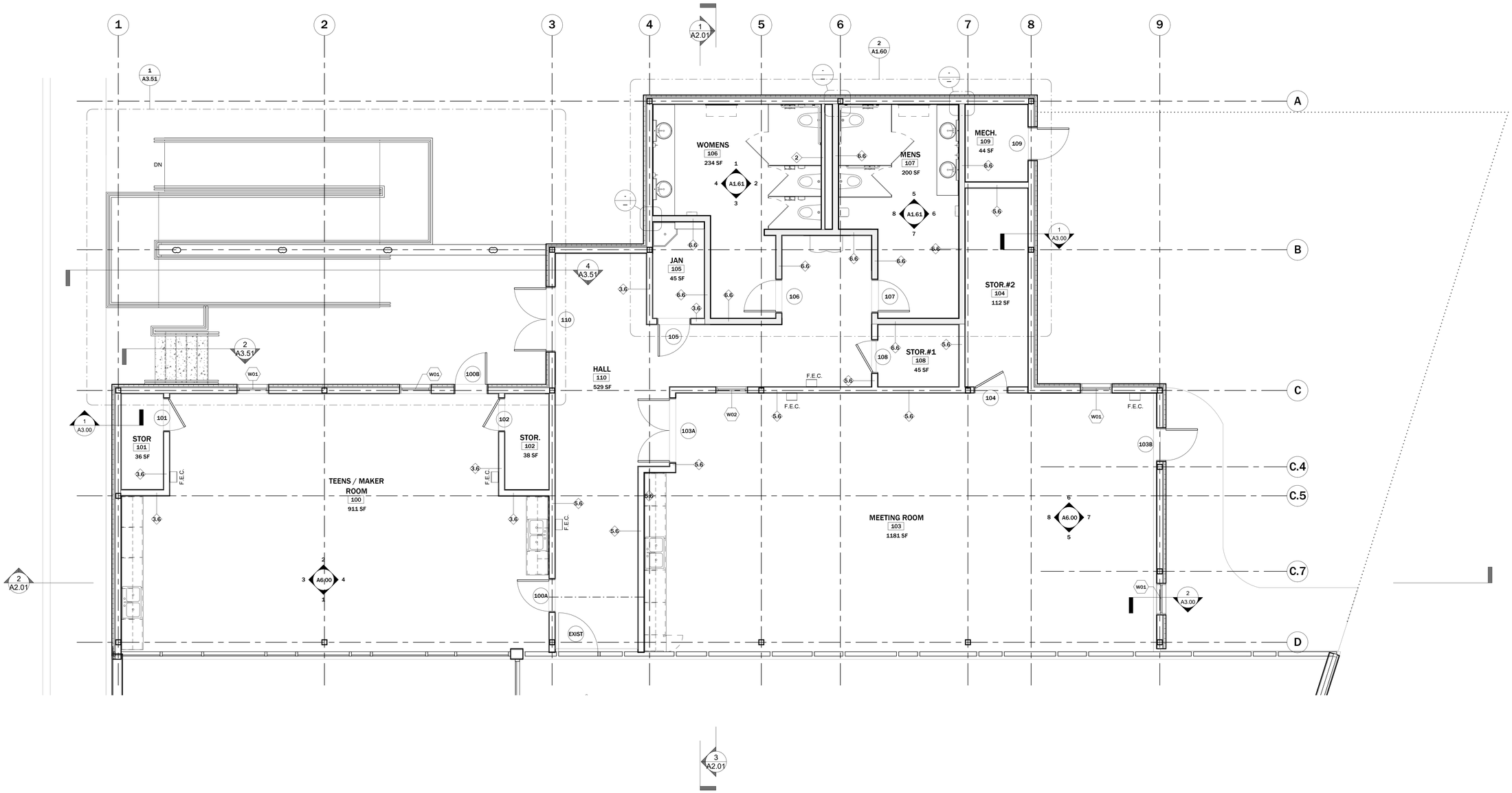

CLAYTON COUNTY LIBRARY SYSTEM

RIVERDALE LIBRARY ADDITION

420 Valley Hill Rd, Riverdale, GA 30274

© 2025 - THESE DOCUMENTS REMAIN THE PROPERTY OF THE ARCHITECT AND MAY NOT BE USED OR REPRODUCED WITHOUT WRITTEN PERMISSION.

RELEASED FOR CONSTRUCTION

Revisions

No.	Date	Description
	8/29/25	Issued for Permit

GEORGIA REGISTERED No. 3072 PROFESSIONAL ARCHITECT JOHN DENNY GARDNER, JR.

Gardner Spencer Smith Tench & Jarbeau
A Professional Corporation for the Practice of Architecture
www.gsstj.com

Tower Place Building,
3340 Peachtree Road, N.E.
Suite 1800
Atlanta, Georgia 30326
404.522.8805
404.521.2118 (f)

PROJECT NO.
24105

SHEET TITLE
ENLARGED FLOOR PLAN - ADDITION

SHEET NO.
A1.50

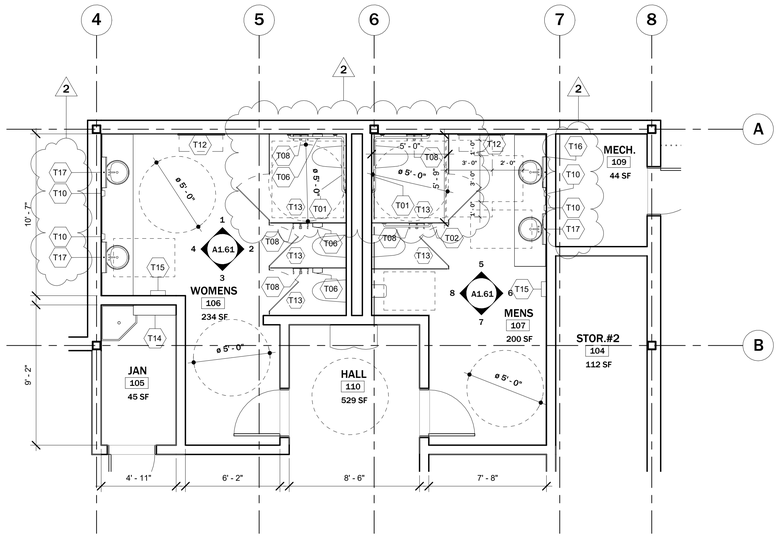

2 ENLARGED PLAN - RESTROOMS 1/4" = 1'-0"

GENERAL NOTES, TOILET ROOMS:

1. SIGNAGE FOR RESTROOMS SHALL BE RAISED AND BRAILLE CHARACTERS @ 48" MIN. AND PICTORIAL SYMBOL SIGNS. SIGNS SHALL BE INSTALLED ON THE WALL ADJACENT TO THE LATCH SIDE OF THE DOOR. WHERE THERE IS NO WALL SPACE TO THE LATCH SIDE OF THE DOOR, INCLUDING AT DOUBLE LEAF DOORS, SIGN SHALL BE PLACED ON THE NEAREST ADJACENT WALL. MOUNTING HEIGHT SHALL BE 60 INCHES MAX. ABOVE THE FINISH FLOOR TO THE CENTERLINE OF THE SIGN.

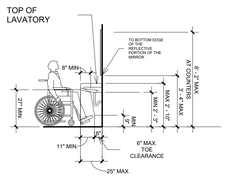

SECTION

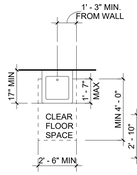

PLAN

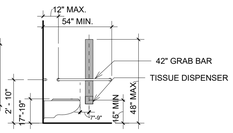

ALL LAVATORIES, WHETHER WALL-HUNG OR IN A COUNTER SHALL BE INSTALLED
TO COMPLY WITH THE CLEARANCES AND DIMENSIONS NOTED ABOVE.
ALL LAVATORIES SHALL BE EQUIPPED WITH SPECIFIED PIPE PROTECTION ENCLOSURES INSTALLED TO MEET CLEARANCES DEFINED BY DASHED LINE INDICATED IN THE SECTION ABOVE.

GRAB BAR REQUIREMENTS

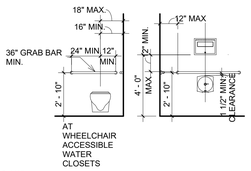

WATER CLOSETS IN ACCESSIBLE STALLS AND WATER CLOSETS IN ACCESSIBLE TOILET ROOMS
SHALL BE INSTALLED AS SHOWN UNLESS DIMENSIONED OR NOTED OTHERWISE.

NOTE: COORDINATE HEIGHTS WITH GRAB BARS AND SPECIFIED ACCESSORIES.

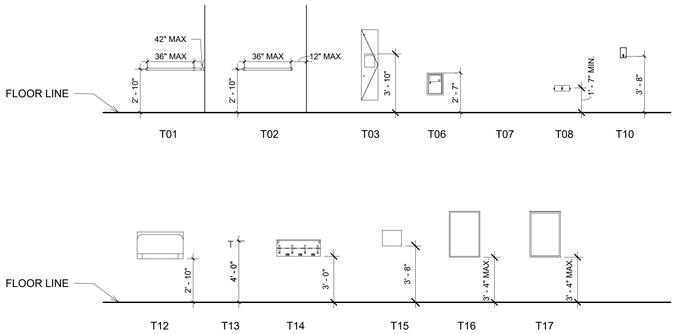

TOILET ACCESSORY SCHEDULE	
MARK	DESCRIPTION
T01	GRAB BAR - 36" X 54" CORNER
T02	GRAB BAR - 12", 24", 36", 42", or 48"
T03	COMBINATION PAPER TOWEL DISPENSER & WASTE - SMALL
T04	NOT USED
T05	NOT USED
T06	MOUNTED SANITARY NAPKIN DISPOSAL
T07	NOT USED
T08	MOUNTED TOILET TISSUE DISPENSER - DOUBLE
T09	NOT USED
T10	SOAP DISPENSER
T11	NOT USED
T12	MOUNTED BABY CHANGING STATION
T13	HOOK WITH BUMPER
T14	MOP RACK
T15	HAND DRYER
T16	FRAMED MIRROR: 24" X 36"
T17	TILTED FRAMED MIRROR: 24' X 36"

1 Toilet Mounting Heights 1/4" = 1'-0"

CLAYTON COUNTY LIBRARY SYSTEM

RIVERDALE LIBRARY ADDITION

420 Valley Hill Rd, Riverdale, GA 30274

© 2025. THESE DOCUMENTS REMAIN THE PROPERTY OF THE ARCHITECT AND MAY NOT BE USED OR REPRODUCED WITHOUT WRITTEN PERMISSION.

RELEASED FOR CONSTRUCTION

Revisions

No.	Date	Description
	8/29/25	Issued for Permit
2	3/6/26	Revision 2

GEORGIA REGISTERED No. 3072 PROFESSIONAL ARCHITECT JOHN GARDNER, JR.

Gardner Spencer Smith Tench & Jarbeau
A Professional Corporation for the Practice of Architecture
www.gsstj.com
Tower Place Building, 3340 Peachtree Road, N.E. Suite 1800 Atlanta, Georgia 30326
404.522.8805
404.521.2118 (f)

PROJECT NO. 24105

SHEET TITLE ENLARGED PLANS - TOILETS

SHEET NO. A1.60

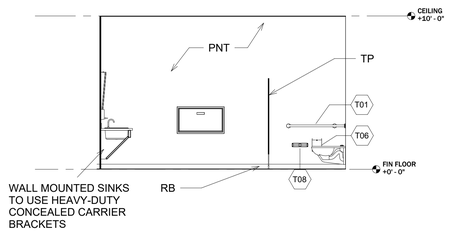

1 INTERIOR ELEVATIONS - WOMEN'S RR 1 1/4" = 1'-0"

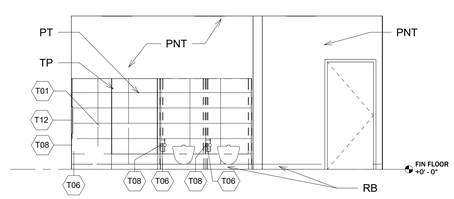

2 INTERIOR ELEVATIONS - WOMEN'S RR 2 1/4" = 1'-0"

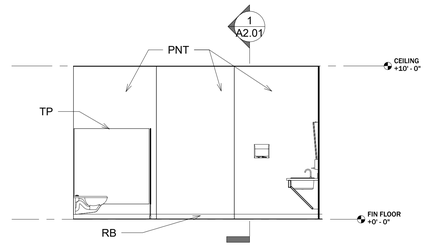

3 INTERIOR ELEVATIONS - WOMEN'S RR 3 1/4" = 1'-0"

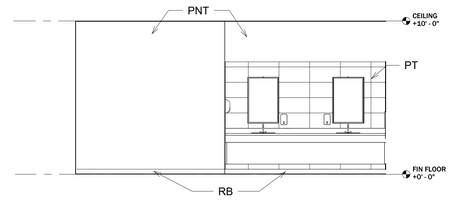

4 INTERIOR ELEVATIONS - WOMEN'S RR 4 1/4" = 1'-0"

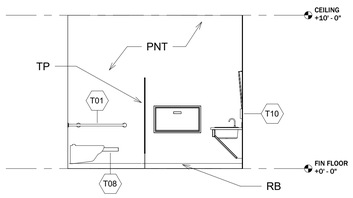

5 INTERIOR ELEVATIONS - MEN'S RR 1 1/4" = 1'-0"

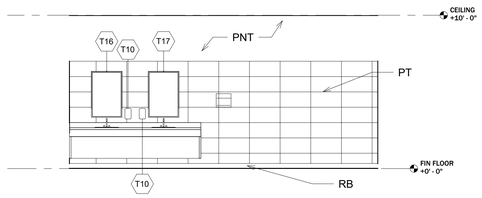

6 INTERIOR ELEVATIONS - MEN'S RR 2 1/4" = 1'-0"

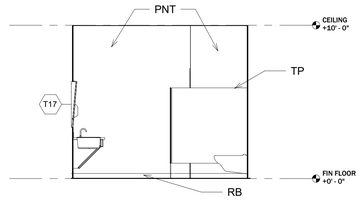

7 INTERIOR ELEVATIONS - MEN'S RR 3 1/4" = 1'-0"

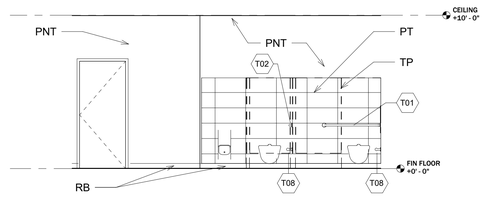

8 INTERIOR ELEVATIONS - MEN'S RR 4 1/4" = 1'-0"

CLAYTON COUNTY
LIBRARY
SYSTEM

RIVERDALE
LIBRARY
ADDITION

420 Valley Hill
Rd, Riverdale,
GA 30274

© 2025. THESE DOCUMENTS REMAIN THE PROPERTY OF THE ARCHITECT AND MAY NOT BE USED OR REPRODUCED WITHOUT WRITTEN PERMISSION.

RELEASED FOR CONSTRUCTION

Revisions

No.	Date	Description
	8/29/25	Issued for Permit

GEORGIA
REGISTERED
No. 3072
PROFESSIONAL
ARCHITECT
JOSEPH LYNN GARDNER, JR.

Gardner
Spencer
Smith
Tench &
Jarbeau
A Professional Corporation
for the Practice of Architecture
www.gsstj.com

Tower Place Building,
3340 Peachtree Road, N.E.
Suite 1800
Atlanta, Georgia 30326
404.522.8805
404.521.2118 (f)

PROJECT NO.
24105

SHEET TITLE
INTERIOR ELEVATIONS - TOILETS

SHEET NO.
A1.61

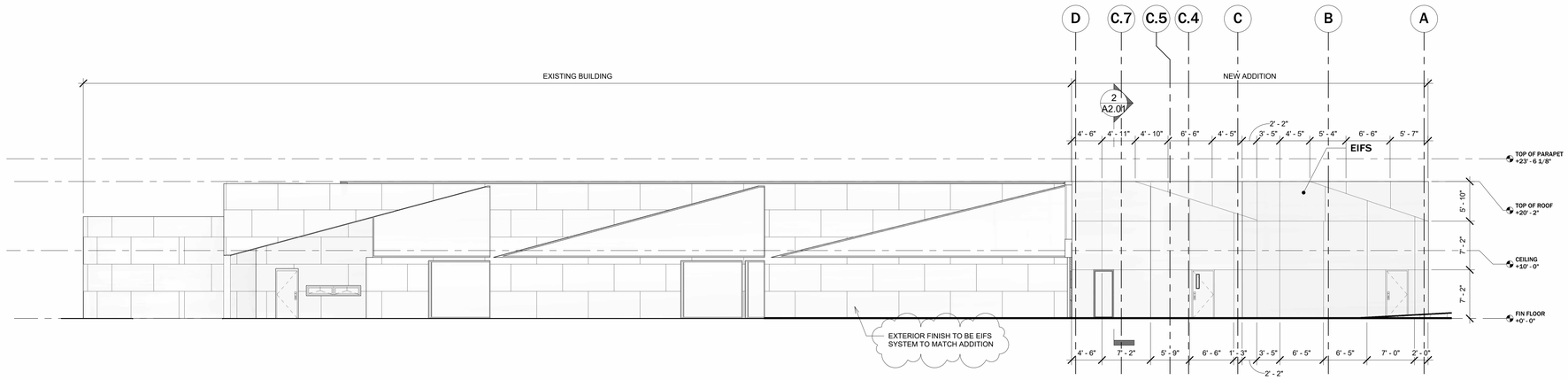

1 EXTERIOR ELEVATION - EAST 1/8" = 1'-0"

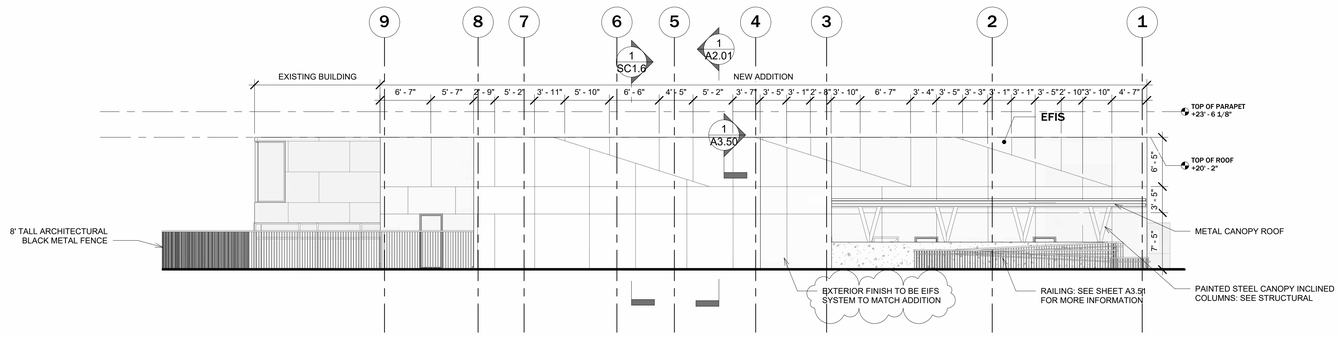

2 EXTERIOR ELEVATION - NORTH 1/8" = 1'-0"

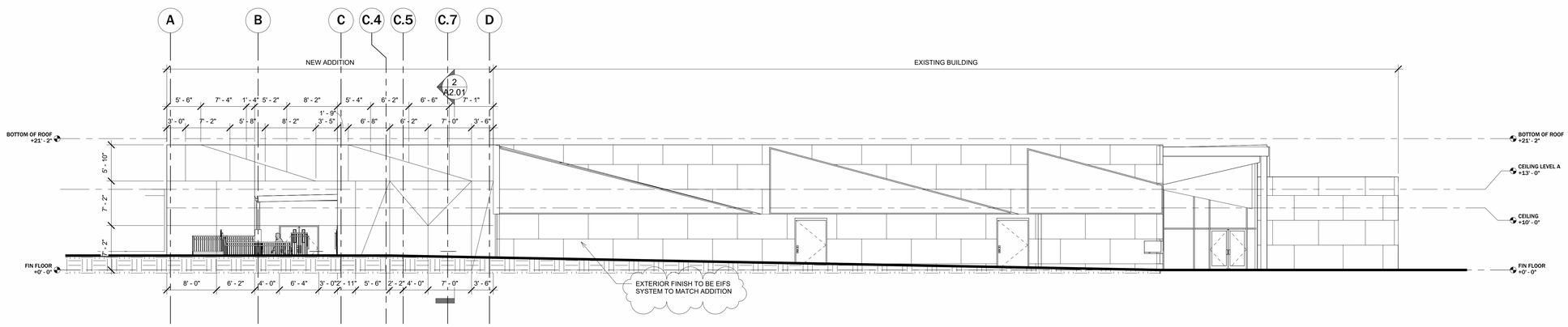

3 EXTERIOR ELEVATION - WEST 1/8" = 1'-0"

CLAYTON COUNTY
LIBRARY
SYSTEM

RIVERDALE
LIBRARY
ADDITION

420 Valley Hill
Rd, Riverdale,
GA 30274

© 2025. THESE DOCUMENTS REMAIN THE PROPERTY OF THE ARCHITECT AND MAY NOT BE USED OR REPRODUCED WITHOUT WRITTEN PERMISSION.

RELEASED FOR CONSTRUCTION

Revisions

No.	Date	Description
	8/29/25	Issued for Permit
2	3/6/26	Revision 2

GEORGIA REGISTERED No. 3072 PROFESSIONAL ARCHITECT JOHN GARDNER JR

Gardner
Spencer
Smith
Tench &
Jarbeau
A Professional Corporation
for the Practice of Architecture
www.gsstj.com

Tower Place Building,
3340 Peachtree Road, N.E.
Suite 1800
Atlanta, Georgia 30326
404.522.8805
404.521.2118 (f)

PROJECT NO.
24105

SHEET TITLE
EXTERIOR ELEVATION

SHEET NO.
A2.00

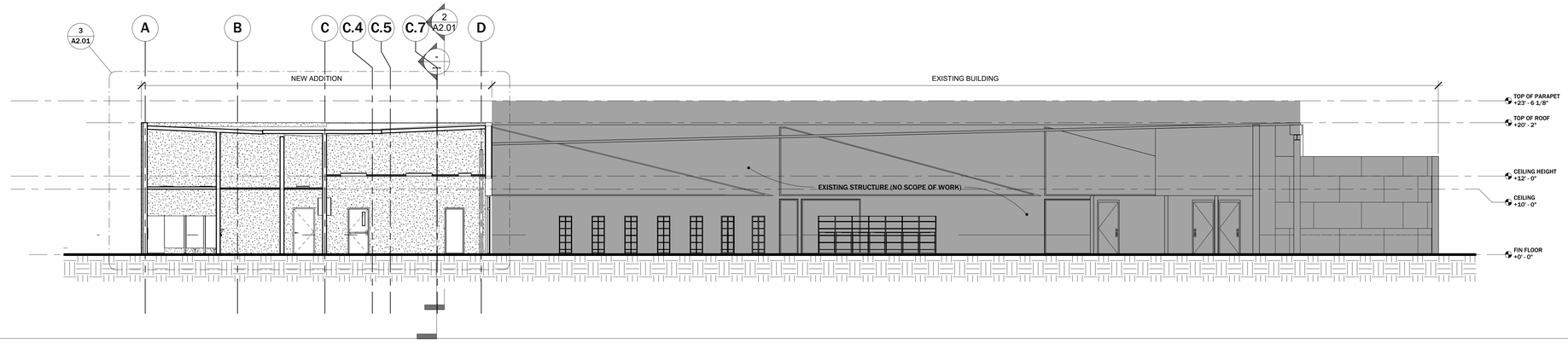

1 Building Section A1 1/8" = 1'-0"

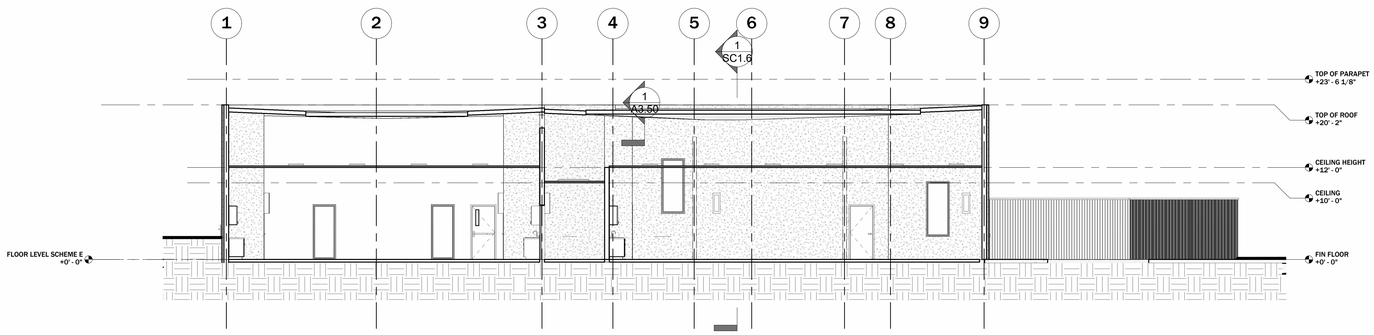

2 Building Section B1 1/8" = 1'-0"

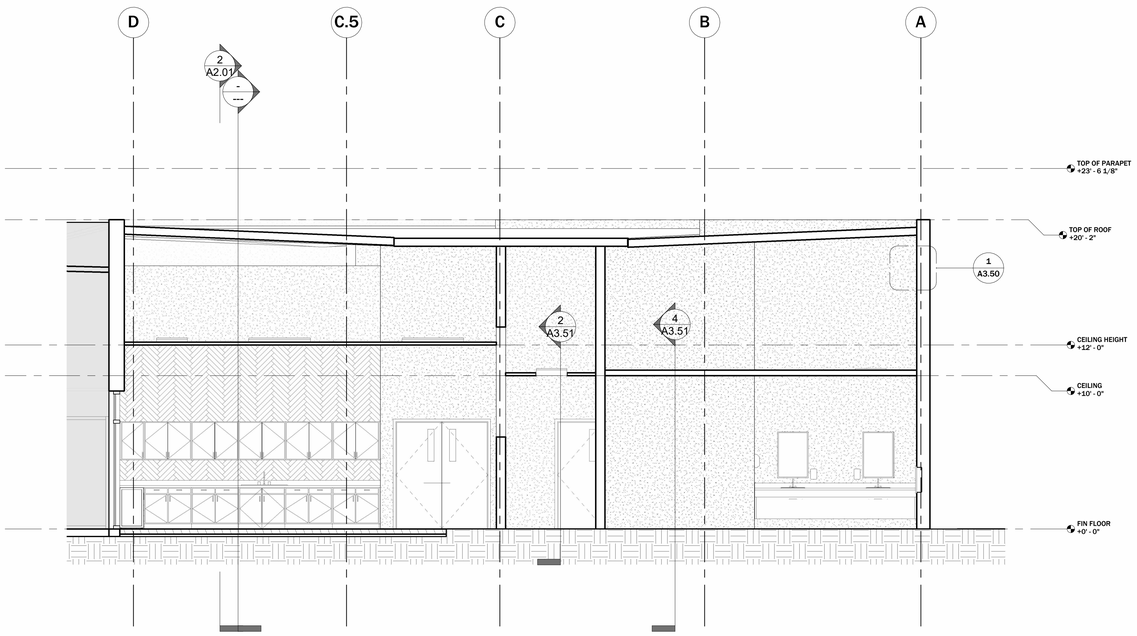

3 ENLARGED SECTION A 1/4" = 1'-0"

CLAYTON COUNTY LIBRARY SYSTEM

RIVERDALE LIBRARY ADDITION

420 Valley Hill Rd, Riverdale, GA 30274

© 2025 THESE DOCUMENTS REMAIN THE PROPERTY OF THE ARCHITECT AND MAY NOT BE USED OR REPRODUCED WITHOUT WRITTEN PERMISSION.

RELEASED FOR CONSTRUCTION

Revisions

No.	Date	Description
	8/29/25	Issued for Permit

GEORGIA REGISTERED No. 3072 PROFESSIONAL ARCHITECT JOHN GLENN GARDNER, JR.

Gardner Spencer Smith Tench & Jarbeau
A Professional Corporation for the Practice of Architecture
www.gsstj.com

Tower Place Building,
3340 Peachtree Road, N.E.
Suite 1800
Atlanta, Georgia 30326
404.522.8805
404.521.2118 (f)

PROJECT NO.
24105

SHEET TITLE
BUILDING SECTION

SHEET NO.
A2.01

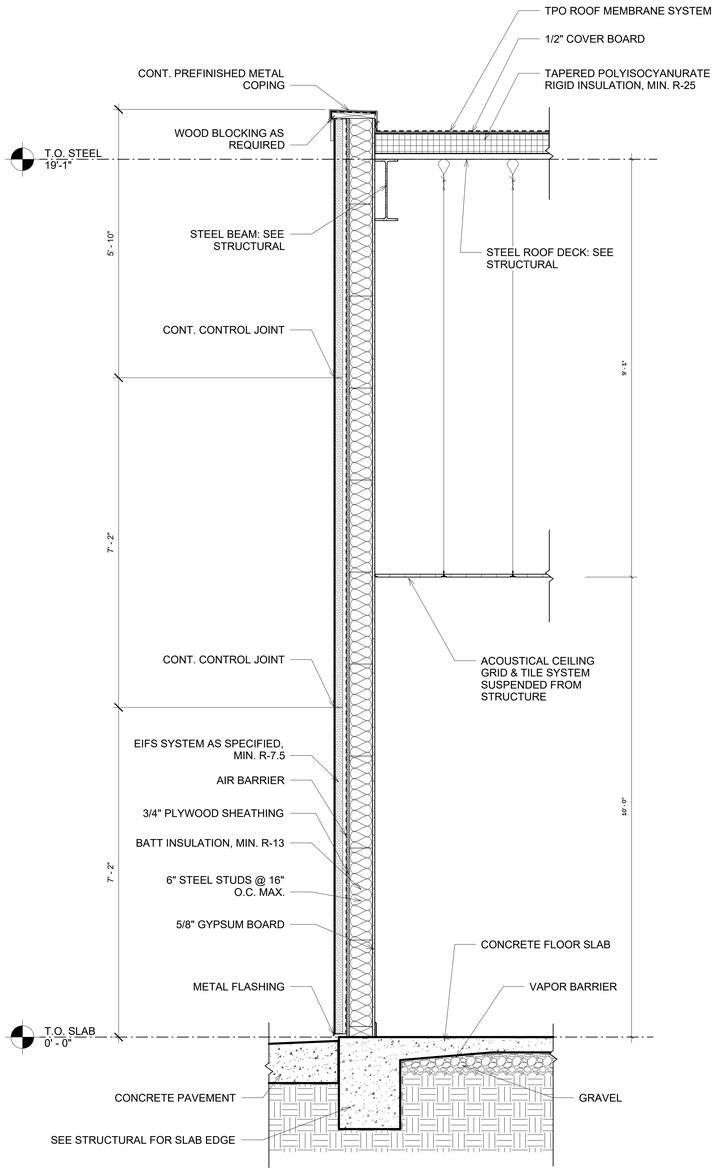

1 TYPICAL WALL SECTION 3/4" = 1'-0"

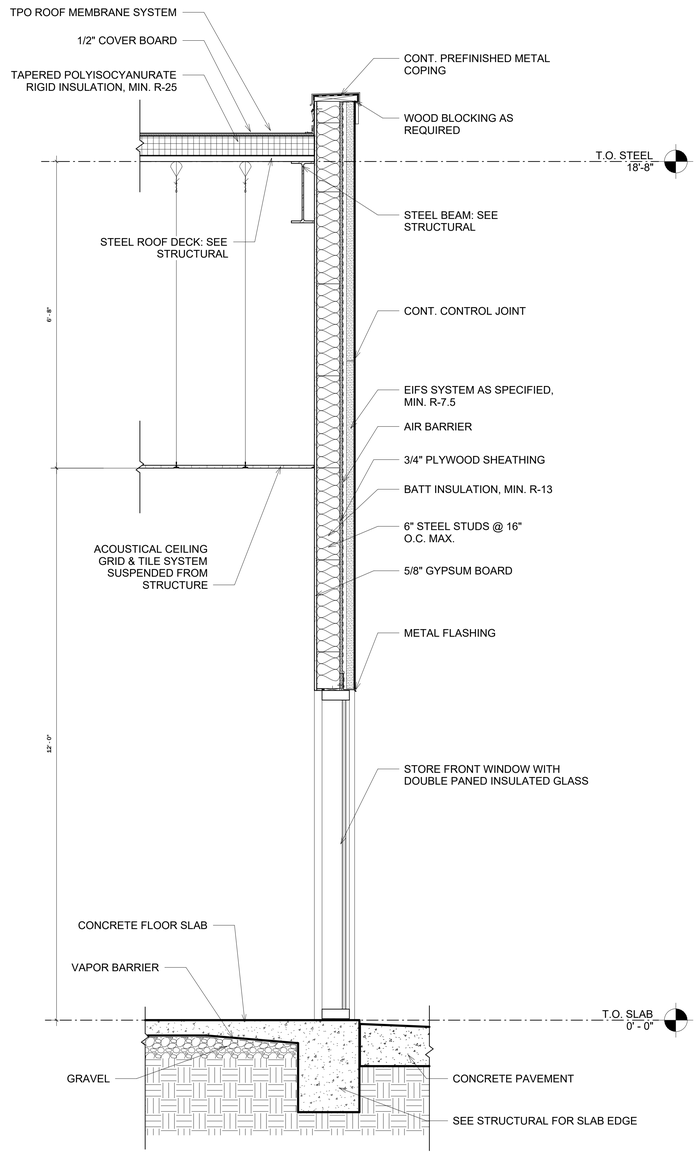

2 WALL SECTION @ STOREFRONT 3/4" = 1'-0"

CLAYTON COUNTY LIBRARY SYSTEM

RIVERDALE LIBRARY ADDITION

420 Valley Hill Rd, Riverdale, GA 30274

© 2025 THESE DOCUMENTS REMAIN THE PROPERTY OF THE ARCHITECT AND MAY NOT BE USED OR REPRODUCED WITHOUT WRITTEN PERMISSION.

RELEASED FOR CONSTRUCTION

Revisions

No.	Date	Description
	8/29/25	Issued for Permit

GEORGIA REGISTERED No. 3072 PROFESSIONAL ARCHITECT JOHN GLENN GARDNER, JR.

Gardner Spencer Smith Tench & Jarbeau
A Professional Corporation for the Practice of Architecture
www.gsstj.com

Tower Place Building,
3340 Peachtree Road, N.E.
Suite 1800
Atlanta, Georgia 30326
404.522.8805
404.521.2118 (f)

PROJECT NO.
24105

SHEET TITLE
WALL SECTIONS

SHEET NO.
A3.00

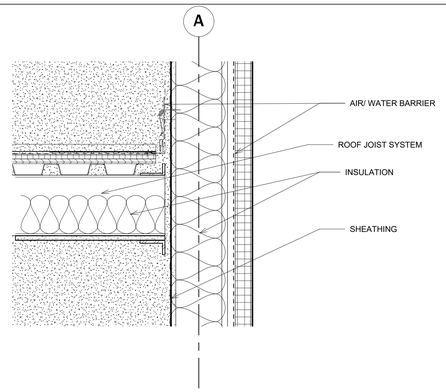

1 TYPICAL WALL SECTION 1 1/2" = 1'-0"

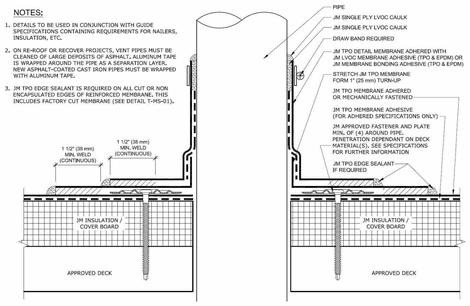

4 TYPICAL ROOF VENT DETAIL NOT TO SCALE

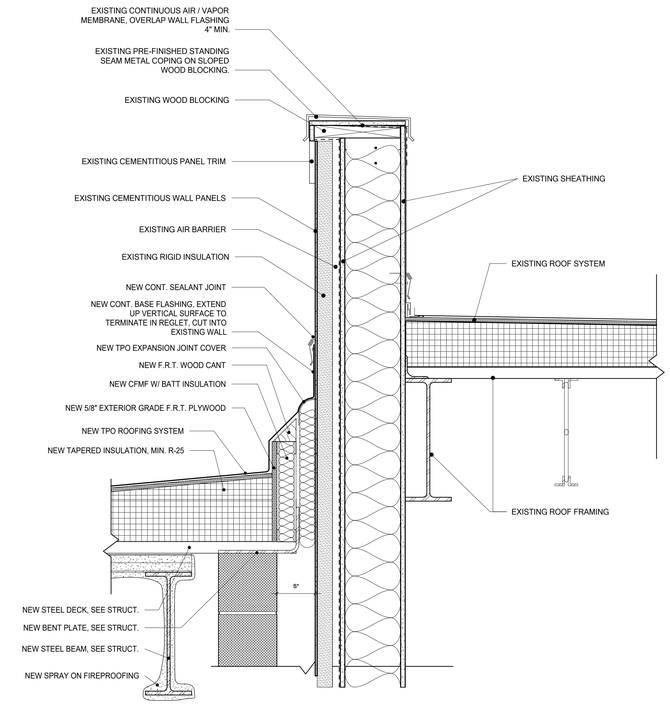

3 ROOF TO WALL E.J. @ EXISTING BUILDING 1 1/2" = 1'-0"

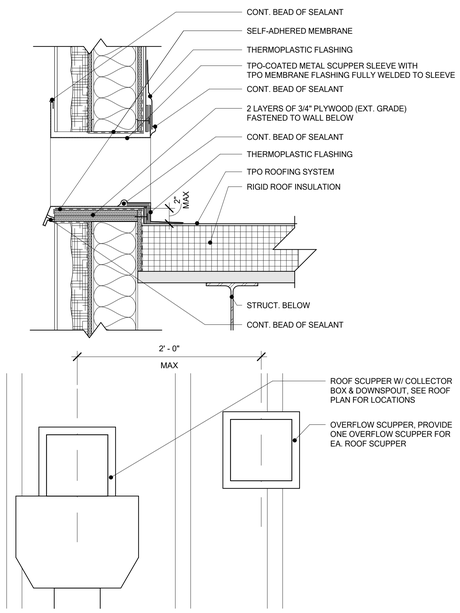

2 OVERFLOW SCUPPER DETAIL 1 1/2" = 1'-0"

SHIP'S LADDER
DETAIL NOT USED 1

ROOF HATCH DETAIL
NOT USED 1

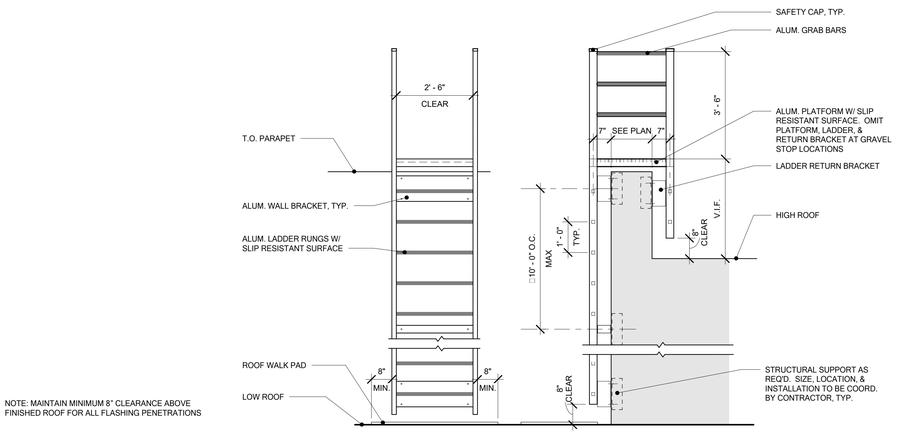

6 ROOF LADDER DETAIL 1/2" = 1'-0"

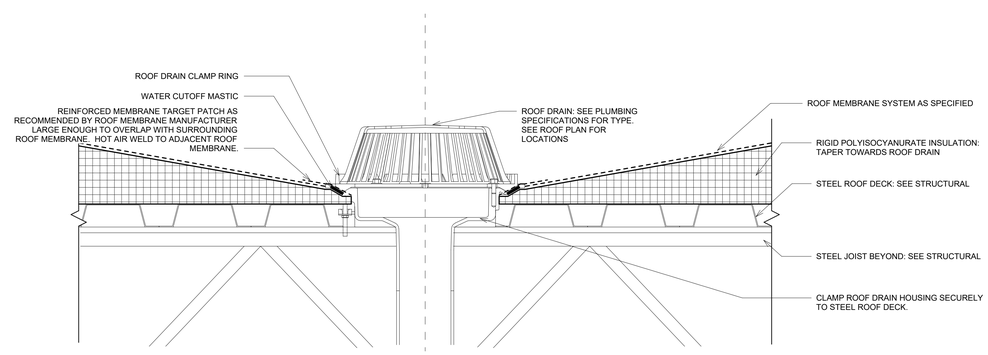

8 TYPICAL ROOF DRAIN DETAIL 1 3" = 1'-0"

CLAYTON COUNTY LIBRARY SYSTEM

RIVERDALE LIBRARY ADDITION

420 Valley Hill Rd, Riverdale, GA 30274

© 2025 THESE DOCUMENTS REMAIN THE PROPERTY OF THE ARCHITECT AND MAY NOT BE USED OR REPRODUCED WITHOUT WRITTEN PERMISSION.

RELEASED FOR CONSTRUCTION

Revisions

No.	Date	Description
	8/29/25	Issued for Permit
1	11/20/25	Revision 1

GEORGIA REGISTERED No. 3072 PROFESSIONAL ARCHITECT JOSEPH CONN GARDNER JR.

Gardner Spencer Smith Tench & Jarbeau
A Professional Corporation for the Practice of Architecture
www.gsstj.com
Tower Place Building, 3340 Peachtree Road, N.E. Suite 1800 Atlanta, Georgia 30326
404.522.8805
404.521.2118 (f)

PROJECT NO. 24105

SHEET TITLE SECTION DETAILS - ROOF AND PARAPET

SHEET NO. A3.50

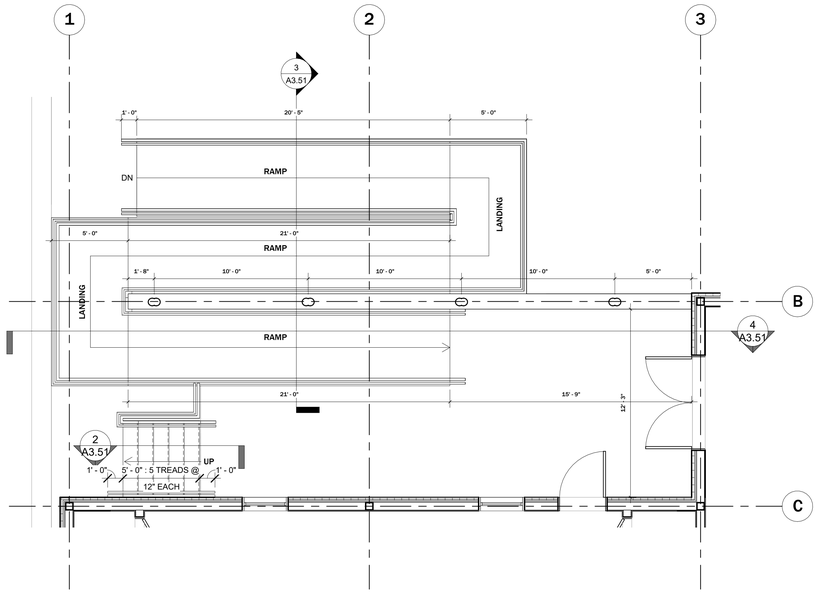

1 ENLARGED PLAN - STAIRS & RAMP 1/4" = 1'-0"

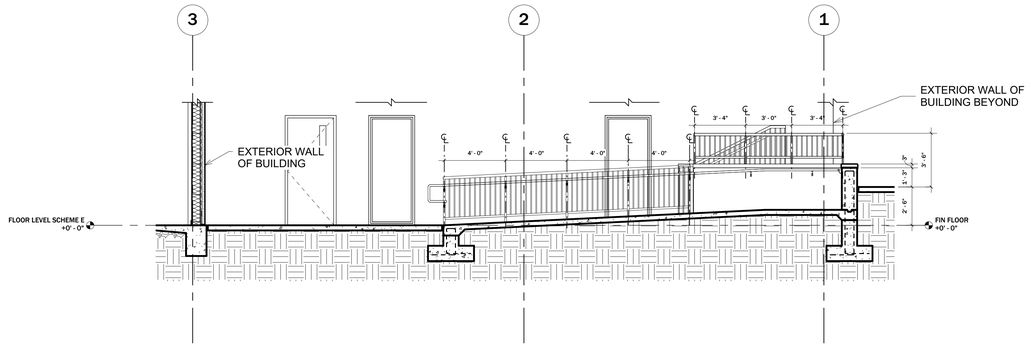

4 SECTION DETAIL - RAMP 1/4" = 1'-0"

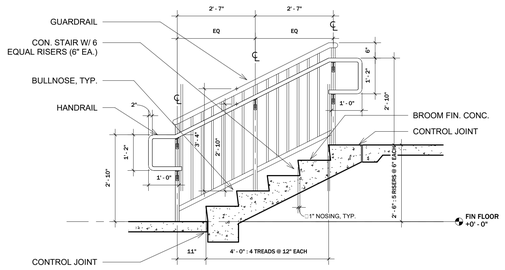

2 SECTION DETAIL - STAIRS 1/2" = 1'-0"

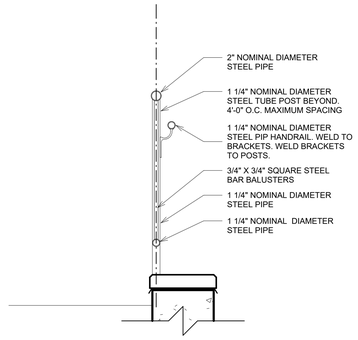

5 Section - Guardrail 1" = 1'-0"

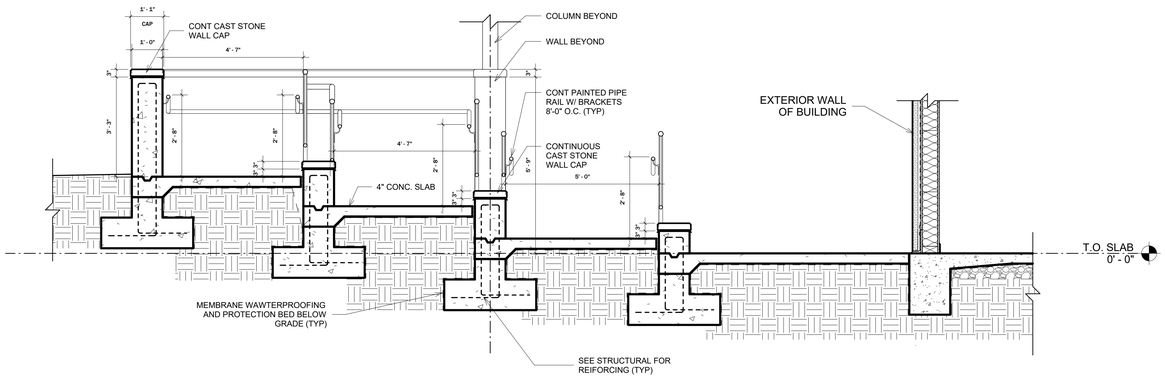

3 Ramp Detail 1/2" = 1'-0"

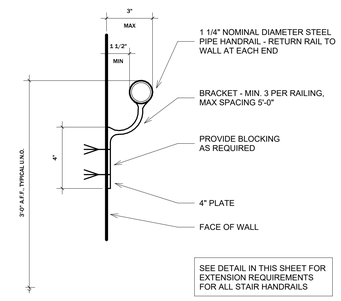

6 HANDRAIL DETAIL 3" = 1'-0"

CLAYTON COUNTY LIBRARY SYSTEM

RIVERDALE LIBRARY ADDITION

420 Valley Hill Rd, Riverdale, GA 30274

© 2025 - THESE DOCUMENTS REMAIN THE PROPERTY OF THE ARCHITECT AND MAY NOT BE USED OR REPRODUCED WITHOUT WRITTEN PERMISSION.

RELEASED FOR CONSTRUCTION

Revisions

No.	Date	Description
	8/29/25	Issued for Permit

GEORGIA REGISTERED No. 3072 PROFESSIONAL ARCHITECT JOHN GARDNER, JR.

Gardner Spencer Smith Tench & Jarbeau
A Professional Corporation for the Practice of Architecture
www.gsstj.com

Tower Place Building,
3340 Peachtree Road, N.E.
Suite 1800
Atlanta, Georgia 30326
404.522.8805
404.521.2118 (f)

PROJECT NO.
24105

SHEET TITLE
PLAN AND SECTION - RAMP & STAIRS

SHEET NO.
A3.51

Door Schedule

MARK.	Function	Hand	DOOR SIZE W	DOOR SIZE H	DOOR SIZE T	Material	Door Style	Finish	Frame Material	Frame Finish	FRAME Elevation	Fire Rating	Head	Jamb	Sill Detail	Lock	Closer	Hold Open	Exit Device	Hook	Card Reader	Hardware Set No.	Signage	NOTES
100A	CLASSROOM	RH	3' - 0"	7' - 0"	0' - 1 3/4"	WD/GL	VLT	STAIN	HM	PNT	1		H1	J1	--	Yes	Yes	No	No	No	No	HW-1	Yes	
100B	ENTRY	LHR	3' - 0"	7' - 0"	0' - 1 3/4"	STL/INS/GL	VLT	PNT	HM	PNT	1		H2	J2	S2	Yes	Yes	No	Yes	No	Yes	HW-2	No	
101	STORAGE	RHR	3' - 0"	7' - 0"	0' - 1 3/4"	SCWD	FLU	STAIN	HM	PNT	1		H1	J1	--	Yes	No	No	No	Yes	No	HW-3	No	
102	STORAGE	LHR	3' - 0"	7' - 0"	0' - 1 3/4"	SCWD	FLU	STAIN	HM	PNT	1		H1	J1	--	Yes	No	No	No	Yes	No	HW-3	No	
103A	CLASSROOM	RHR/LHR	6' - 0"	7' - 0"	0' - 1 3/4"	WD/GL	DLT	STAIN	HM	PNT	2		H1	J1	S1	Yes	Yes	No	Yes	No	No	HW-4	Yes	
103B	ENTRY	RHR	3' - 0"	7' - 0"	0' - 1 3/4"	STL/INS/GL	VLT	PNT	HM	PNT	1		H2	J2	S4	Yes	Yes	No	Yes	No	Yes	HW-2	No	
104	STORAGE	LH	3' - 0"	7' - 0"	0' - 1 3/4"	SCWD	FLU	STAIN	HM	PNT	1		H1	J1	S1	Yes	No	No	No	No	No	HW-3	No	
105	STORAGE	LHR	3' - 0"	7' - 0"	0' - 1 3/4"	SCWD	FLU	STAIN	HM	PNT	1		H1	J1	--	No	No	No	No	Yes	No	HW-5	No	
106	PASSAGE	LH	3' - 0"	7' - 0"	0' - 1 3/4"	SCWD	FLU	STAIN	HM	PNT	1		H1	J1	S3	No	Yes	Yes	No	No	No	HW-5	Yes	
107	PASSAGE	RH	3' - 0"	7' - 0"	0' - 1 3/4"	SCWD	FLU	STAIN	HM	PNT	1		H1	J1	S3	No	Yes	Yes	No	No	No	HW-5	Yes	
108	STORAGE	RHR	3' - 0"	7' - 0"	0' - 1 3/4"	SCWD	FLU	STAIN	HM	PNT	1		H1	J1	--	Yes	No	No	No	No	No	HW-3	No	
109	STORAGE	RHR	3' - 0"	7' - 0"	0' - 1 3/4"	STL/INS	FLU	PNT	HM	PNT	1		H1	J1	S2	Yes	No	Yes	No	No	No	HW-3	No	
110	ENTRY	RHR/LHR	6' - 0"	7' - 0"	0' - 1 3/4"	STL/INS/GL	DLT	PNT	HM	PNT	2		H2	J2	S2	Yes	Yes	No	Yes	No	Yes	HW-6	No	

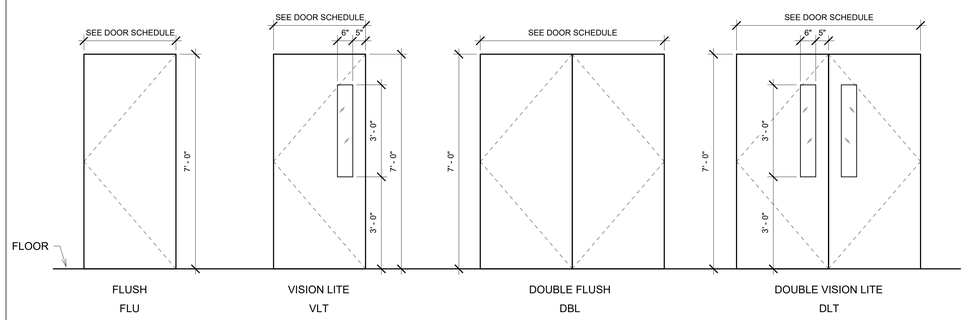

1 Door Elevations 1/2" = 1'-0"

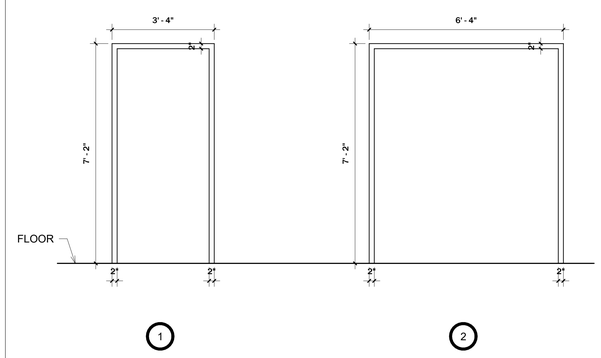

2 Frame Elevations 1/2" = 1'-0"

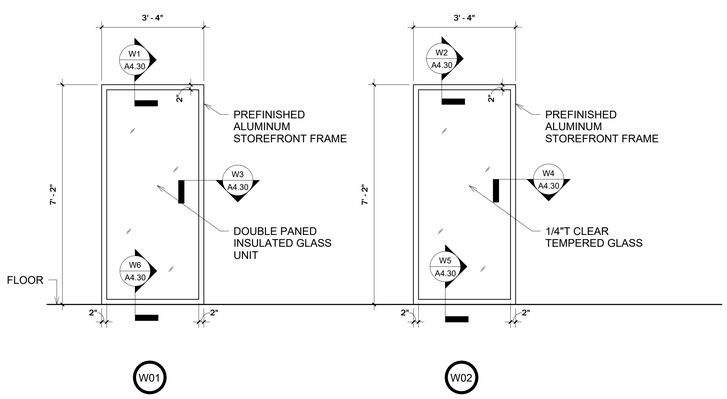

3 Window Elevations 1/2" = 1'-0"

CLAYTON COUNTY LIBRARY SYSTEM

RIVERDALE LIBRARY ADDITION

420 Valley Hill Rd, Riverdale, GA 30274

© 2025 THESE DOCUMENTS REMAIN THE PROPERTY OF THE ARCHITECT AND MAY NOT BE USED OR REPRODUCED WITHOUT WRITTEN PERMISSION.

RELEASED FOR CONSTRUCTION

Revisions

No.	Date	Description
	8/29/25	Issued for Permit

GEORGIA REGISTERED No. 3072 PROFESSIONAL ARCHITECT JONATHAN GLENN GARDNER

Gardner Spencer Smith Tench & Jarbeau
A Professional Corporation for the Practice of Architecture
www.gsstj.com

Tower Place Building,
3340 Peachtree Road, N.E.
Suite 1800
Atlanta, Georgia 30326
404.522.8805
404.521.2118 (f)

PROJECT NO.
24105

SHEET TITLE
DOOR & WINDOW SCHEDULE AND ELEVATIONS

SHEET NO.
A4.00

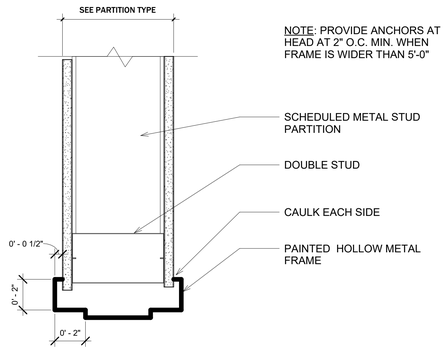

H1 DOOR HEAD DETAIL- TYP INTERIOR DOOR 3" = 1'-0"

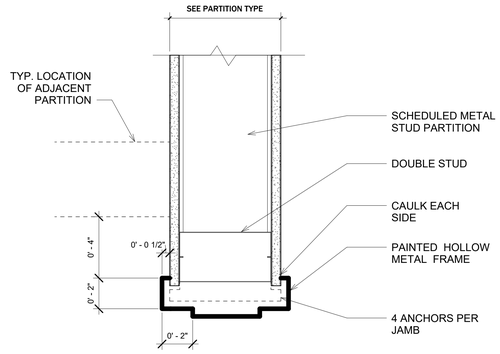

J1 DOOR JAMB DETAIL- TYP INTERIOR DOOR 3" = 1'-0"

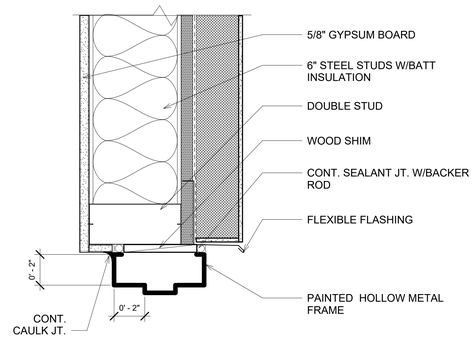

H2 DOOR HEAD DETAIL - TYP EXTERIOR DOOR 3" = 1'-0"

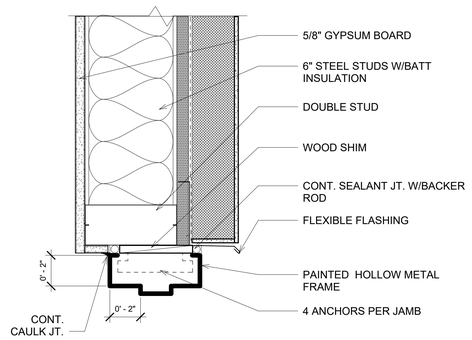

J2 DOOR JAMB DETAIL - TYP EXTERIOR DOOR 3" = 1'-0"

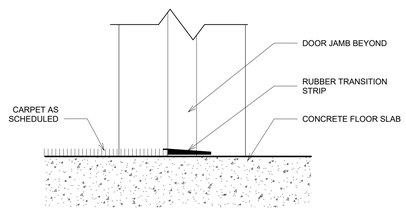

S1 DOOR SILL DETAIL - CONCRETE TO CARPET 3" = 1'-0"

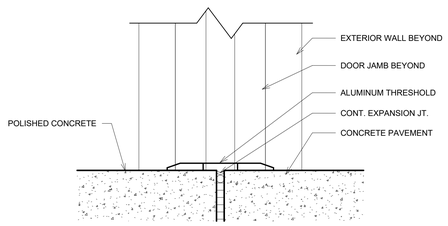

S2 DOOR SILL DETAIL - TYP EXTERIOR DOOR 3" = 1'-0"

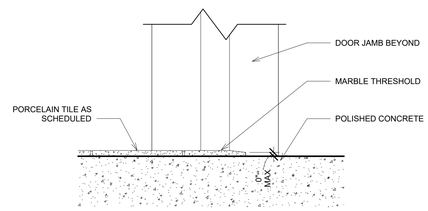

S3 DOOR SILL DETAIL - CONCRETE TO TILE 3" = 1'-0"

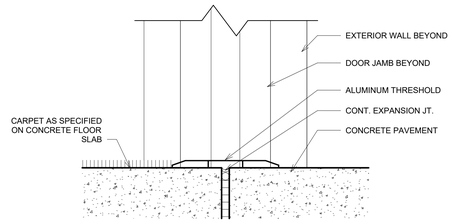

S4 DOOR SILL DETAIL - CARPET TO EXTERIOR 3" = 1'-0"

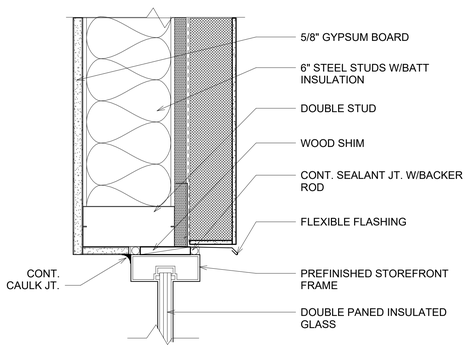

W1 WINDOW HEAD - EXTERIOR 3" = 1'-0"

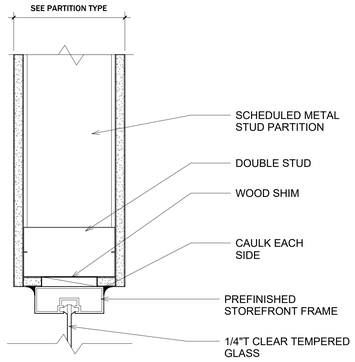

W2 WINDOW HEAD - INTERIOR 3" = 1'-0"

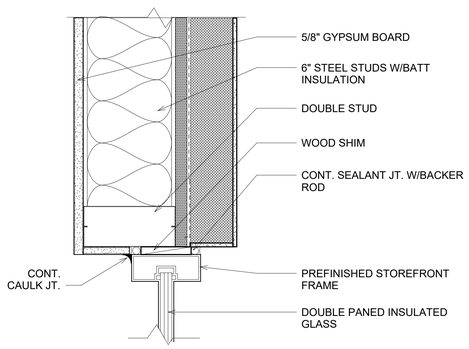

W3 WINDOW JAMB - EXTERIOR 3" = 1'-0"

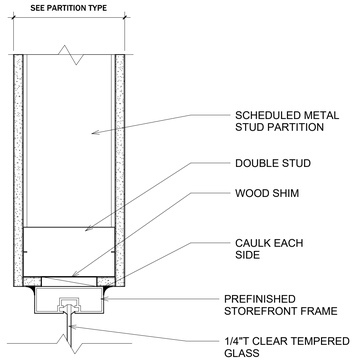

W4 WINDOW JAMB - INTERIOR 3" = 1'-0"

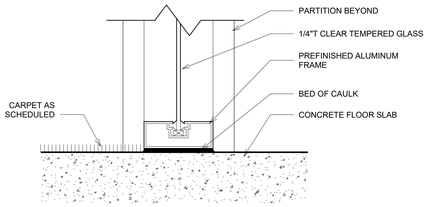

W5 WINDOW SILL DETAIL - INTERIOR 3" = 1'-0"

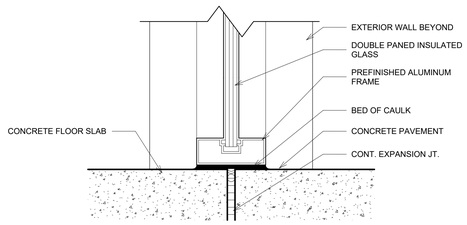

W6 WINDOW SILL DETAIL - EXTERIOR 3" = 1'-0"

CLAYTON COUNTY LIBRARY SYSTEM

RIVERDALE LIBRARY ADDITION

420 Valley Hill Rd, Riverdale, GA 30274

© 2025 THESE DOCUMENTS REMAIN THE PROPERTY OF THE ARCHITECT AND MAY NOT BE USED OR REPRODUCED WITHOUT WRITTEN PERMISSION.

RELEASED FOR CONSTRUCTION

Revisions

No.	Date	Description
	8/29/25	Issued for Permit

GEORGIA REGISTERED No. 3072 PROFESSIONAL ARCHITECT JOHN GARDNER JR.

Gardner Spencer Smith Tench & Jarbeau
A Professional Corporation for the Practice of Architecture
www.gsstj.com

Tower Place Building,
3340 Peachtree Road, N.E.
Suite 1800
Atlanta, Georgia 30326
404.522.8805
404.521.2118 (f)

PROJECT NO.
24105

SHEET TITLE
HEAD, JAMB & SILL DETAILS

SHEET NO.
A4.30

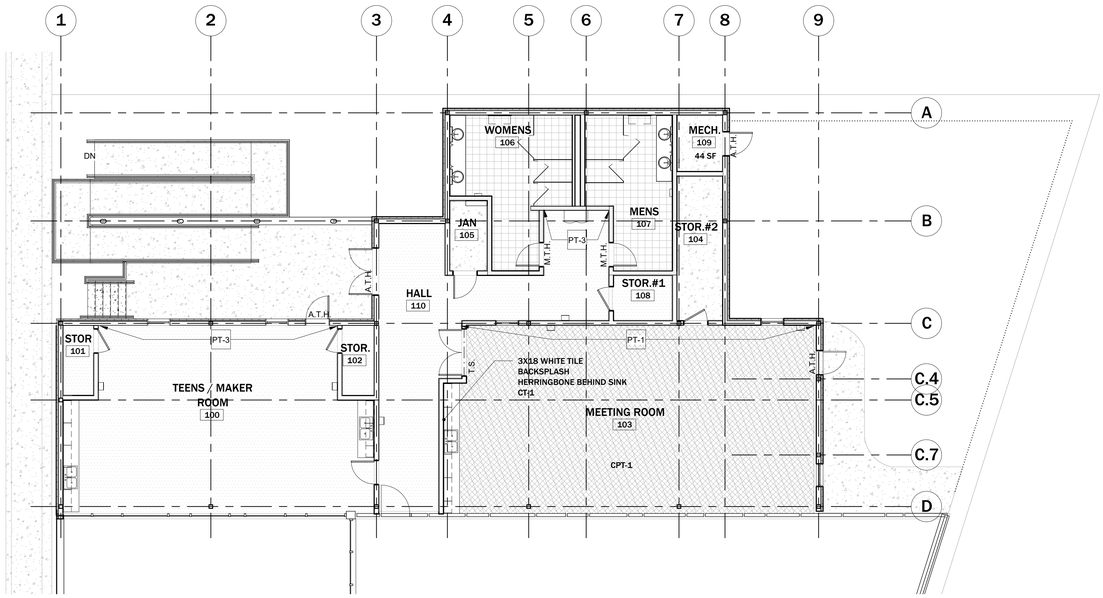

1 FINISH FLOOR PLAN

1/8" = 1'-0"

INTERIOR FINISH NOTES

CPT-1	CARPET BY SHAW CONTRACT, STYLE: LANDSCAPE TILE #5T604, COLOR: MOSS #04375, SIZE: 18 " X 36", INSTALLATION METHOD: 65% OF CPT-1 & 35% OF CPT-2 INSTALLED STAGGER METHOD.
CPT-2	CARPET BY SHAW CONTRACT, STYLE: ELEMENT TILE #5T605, COLOR: MOSS #04375, INSTALLATION METHOD: 65% OF CPT-1 & 35% OF CPT-2 INSTALLED STAGGER METHOD.
CT-1	CERAMIC TILE BY TILEBAR, STYLE: CAVALLO, COLOR: SWISS COFFEE, FINISH: POLISHED PORCELAIN, SIZE: 3 " X 18", INSTALLATION METHOD: RUNNING BOND. REFERENCE INTERIOR ELEVATIONS.
CT-2	CERAMIC TILE BY TILEBAR, STYLE: CAVALLO, COLOR: MONACO GREEN, FINISH: POLISHED PORCELAIN, SIZE: 3 " X 18", INSTALLATION METHOD: HERRINGBONE. REFERENCE INTERIOR ELEVATIONS.
GRT-1	GROUT BY LATICRETE, #16 SILTSTONE. THIS GROUT IS ONLY TO BE USED WITH CERAMIC TILE.
GRT-2	GROUT BY LATICRETE, #88 SILVER SHADOW. THIS GROUT IS TO BE USED WITH PORCELAIN TILE AND PROCLAIN TILE BASE.
PNT-1	BASE PAINT BY SHERWIN WILLIAMS, #SW 7626 ZURICH WHITE, THROUGHOUT UNLESS NOTED OTHERWISE
PNT-2	HOLLOW METAL PAINT BY SHERWIN WILLIAMS, #SW 6179 ARTICHOKE, ONLY ON ALL HM FRAMES
PNT-3	ACCENT PAINT BY SHERWIN WILLIAMS, #SW 6177 SOFTENED GREEN, ON WHERE NOTED. 1
PNT-4	CEILING PAINT BY SHERWIN WILLIAMS, #SW 7007 CEILING BRIGHT WHITE, THROUGHOUT UNLESS NOTED OTHERWISE
PLAM	PLASTIC LAMINATE BY ARBORITE, #P623 MX BRUSHED ALUMINUM (ONLY ON VERTICAL SURFACES OF MILLWORK)
PT	PORCELAIN TILE BY TILEBAR, STYLE: FORDHAM, COLOR: BIANCO, SIZE: 12 " X 24", FINISH: MATTE, INSTALATION METHOD: ASHLAR.
PTB	BULLNOSE PORCELAIN TILE BASE BY TILEBAR, STYLE: FORDHAM, COLOR: BIANCO, SIZE 3" X 24 ", FINISH: MATTE.
RB	RUBBER BASE BY ROPPE #682 EVERGREEN
SS	SOLID SURFACE BY LX HAUSYS, STYLE: HI-MACS, #L017 KAMET (ONLY ON HORIZONTIAL SURFACES OF MILLWORK)
TP	PHENOLIC TOILET PARTITIONS BY ACCURATE PARTITIONS, COLOR: #3000 SILVER GRAY

INTERIOR FINISHES ABBREVIATIONS:

ACT	ACOUSTICAL CEILING TILE
A.T.H.	ALUMINUM THRESHOLD
CONC	CONCRETE
CPT	CARPET TILE
CT	CERAMIC TILE
EXIST	EXISTING
GL	GLASS
GRT	GROUT
GYP OR GWB	GYPSUM BOARD
M.T.H.	MARBLE THRESHOLD
NIC	NOT IN CONTRACT
PC	POLISHED CONCRETE
PLAM	PLASTIC LAMINATE
PNT	PAINT
PT	PORCELAIN TILE
PTB	PORCELAIN TILE BASE
RB	RUBBER BASE
SC	SEALED CONCRETE
SS	SOLID SURFACE
TBD	TO BE DETERMINED
TP	TOILET PARTITIONS
T.S.	TRANSITION STRIP
WD	WOOD
WDDR	WOOD DOORS

INTERIOR FINISH NOTES: 1

1. ALL FLOORING SHALL BE INSTALLED AS PER MANUFACTURER'S RECOMMENDATIONS REGARDING ADHESIVES, SEAMING, DIRECTIONS, ETC.
2. ALL TRANSITIONS IN FLOOR MATERIALS SHALL OCCUR UNDER THE CENTERLINE OF THE CLOSED DOOR WHERE APPLICABLE.
3. ALL AREAS SHALL BE PAINTED PNT-1, UNLESS OTHERWISE NOTED. ALL GRILLES, DIFFUSERS, AND ACCESS PANELS SHALL BE PAINTED TO MATCH THE WALL OR CEILING ON WHICH THEY ARE LOCATED UNLESS NOTED OTHERWISE.
4. ALL PAINTED METAL SHALL RECEIVE MANUFACTURER'S RECOMMENDED PRIMER COAT AND TWO (2) COATS OF LATEX SEMI-GLOSS FINISH.
5. IT IS THE CONTRACTOR'S RESPONSIBILITY TO SUBMIT SAMPLES TO GSSTJ FOR APPROVAL PRIOR TO PURCHASE OF PRODUCT. THE SAMPLES MUST BE LABELED BEFORE SUBMITTING TO GSSTJ.
6. ALL INTERIOR FINISHES REQUIRED ARE INCLUDED IN THESE DRAWINGS. SOME PRODUCTS HAVE A LONGER LEAD TIME AND ARE NOT GUARANTEED TO BE IN STOCK. SUBCONTRACTORS SHALL PLACE ORDERS IMMEDIATELY UPON AWARD OF PROJECT TO AVOID THE USE OF INTERMEDIATE FINISHES.
7. ALL FLOORING SHALL BE CENTERED IN ROOMS.
8. ALL INTERIOR PORTIONS OF CABINETS AND DRAWER INTERIORS SHALL BE WHITE MELAMINE.
9. CONTRACTOR TO FURNISH AND INSTALL SCHLUTER FINISHING STRIPS IN RESTROOMS AT TOP AND SIDES AT CUT TILES. THE STRIPS SHALL MATCH THE FINISH ON THE FAUCETS.
10. REFERENCE INTERIOR FINISH FLOOR PLAN FOR ACCENT PAINT LOCATIONS.
11. TILE CONTRACTOR TO FURNISH AND INSTALL SCHLUTER FINISHING STRIPS ON THE TILE AT CUT EDGES. THE FINISH ON THE FINISHING STRIPS SHALL MATCH THE FAUCETS.
12. THE WOOD STAIN IS TO BE DETERMINED.

INTERIOR FINISH SCHEDULE

ROOM #	ROOM NAME	FLOOR		BASE	WALLS		Ceiling Finish	SPECIAL FINISHES
		SUBSTRATE	FLOOR		SUBSTRATE	WALL		
100	TEENS / MAKER ROOM	CONCRETE	PC	RB	GWB	PNT-1/ PNT-3	ACT	HM DOOR FRAME: PNT-2 & COUNTERTOP: SS & BASE CABINET: PLAM
101	STOR	CONCRETE	PC	RB	GWB	PNT-1	PNT-4	HM DOOR FRAME: PNT-2
102	STOR.	CONCRETE	PC	RB	GWB	PNT-1	PNT-4	HM DOOR FRAME: PNT-2
103	MEETING ROOM	CONCRETE	CPT-1/ CPT-2	RB	GWB	PNT-1/ PNT-3	ACT	HM DOOR FRAME: PNT-2 & COUNTERTOP: SS & BASE CABINET: PLAM & BACKSPLASH: CT-1
104	STOR.#2	CONCRETE	SC	RB	GWB	PNT-1	ACT	HM DOOR FRAME: PNT-2
105	JAN	CONCRETE	SC	RB	GWB	PNT-1	ACT	HM DOOR FRAME: PNT-2
106	WOMENS	CONCRETE	PT/ GRT-2	PTB	GWB	PNT-1/ CT-1/ CT-2/ GRT-1	PNT-4	HM DOOR FRAME: PNT-2 & COUNTERTOP: SS & BASE CABINET: PLAM & TOILET PARTITION: TP
107	MENS	CONCRETE	PT/ GRT-2	PTB	GWB	PNT-1/ CT-1/ CT-2/ GRT-1	PNT-4	HM DOOR FRAME: PNT-2 & COUNTERTOP: SS & BASE CABINET: PLAM & TOILET PARTITION: TP
108	STOR.#1	CONCRETE	PC	RB	GWB	PNT-1	ACT	HM DOOR FRAME: PNT-2
109	MECH.	CONCRETE	SC	RB	GWB	PNT-1	---	HM DOOR FRAME: PNT-2
110	HALL	CONCRETE	PC	RB	GWB	PNT-1	ACT	HM DOOR FRAME: PNT-2

1 1 1

FINISH FLOOR LEGEND

- CPT-1 - CARPET
- CPT-2 - CARPET
- PT - PORCELAIN TILE
- SC - SEALED CONCRETE
- PC - POLISHED CONCRETE

CLAYTON COUNTY LIBRARY SYSTEM

RIVERDALE LIBRARY ADDITION

420 Valley Hill Rd, Riverdale, GA 30274

© 2025 THESE DOCUMENTS REMAIN THE PROPERTY OF THE ARCHITECT AND MAY NOT BE USED OR REPRODUCED WITHOUT WRITTEN PERMISSION.

RELEASED FOR CONSTRUCTION

Revisions

No.	Date	Description
	8/29/25	Issued for Permit
1	11/20/25	Revision 1

GEORGIA REGISTERED No. 3072 PROFESSIONAL ARCHITECT JOHN GLENN GARDNER, JR.

Gardner Spencer Smith Tench & Jarbeau
A Professional Corporation for the Practice of Architecture
www.gsstj.com

Tower Place Building,
3340 Peachtree Road, N.E.
Suite 1800
Atlanta, Georgia 30326
404.522.8805
404.521.2118 (f)

PROJECT NO.
24105

SHEET TITLE
INTERIOR FINISH PLAN, SCHEDULE & NOTES

SHEET NO.
A5.00

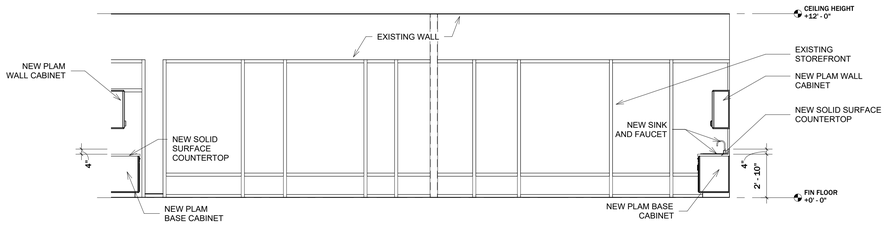

1 INTERIOR ELEVATION - TEENS/ MAKER RM 1/4" = 1'-0"

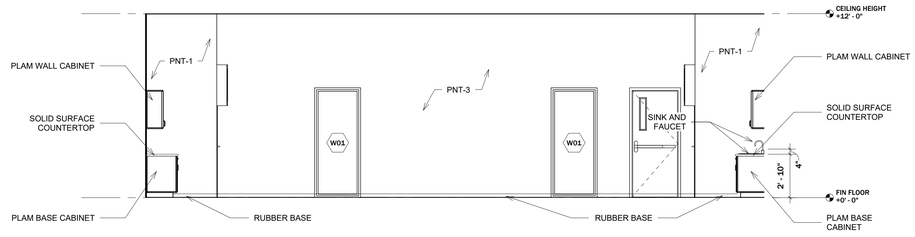

2 INTERIOR ELEVATION - TEENS/ MAKER RM 1/4" = 1'-0"

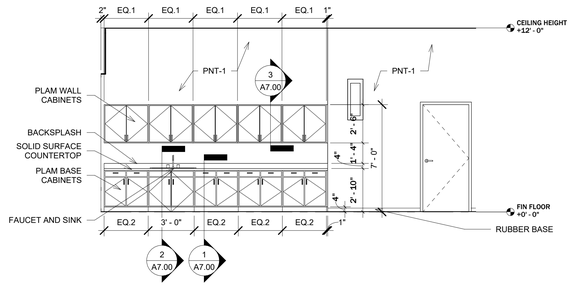

3 INTERIOR ELEVATION - TEENS/ MAKER RM 1/4" = 1'-0"

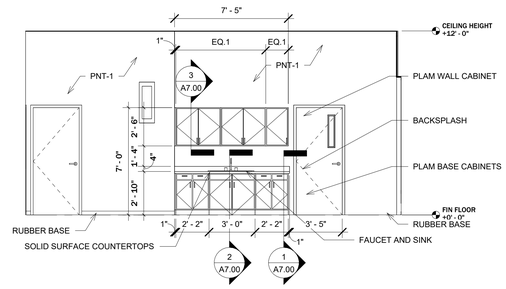

4 INTERIOR ELEVATION - TEENS/ MAKER RM 1/4" = 1'-0"

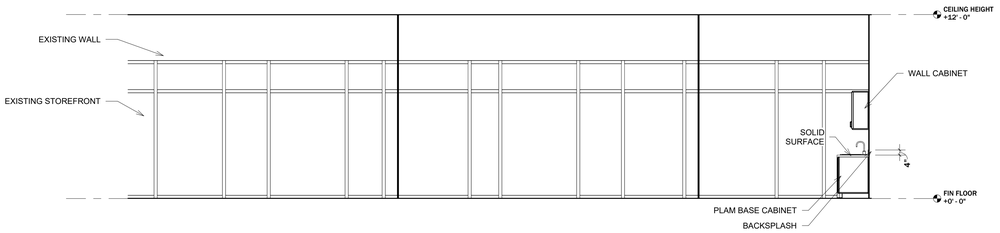

5 INTERIOR ELEVATION - MEETING ROOM 1/4" = 1'-0"

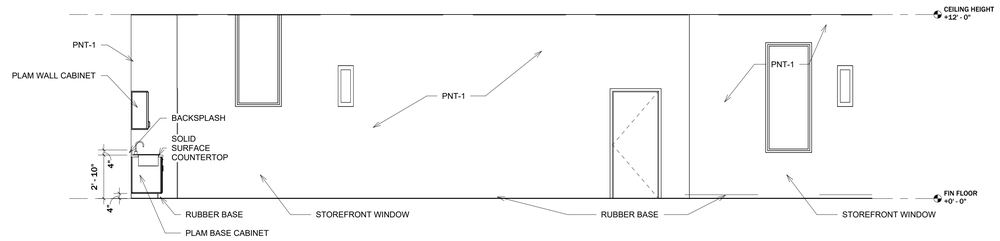

6 INTERIOR ELEVATION - MEETING ROOM 1/4" = 1'-0"

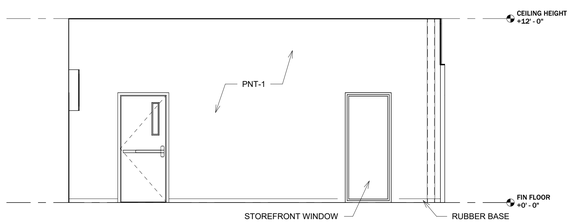

7 INTERIOR ELEVATION - MEETING ROOM 1/4" = 1'-0"

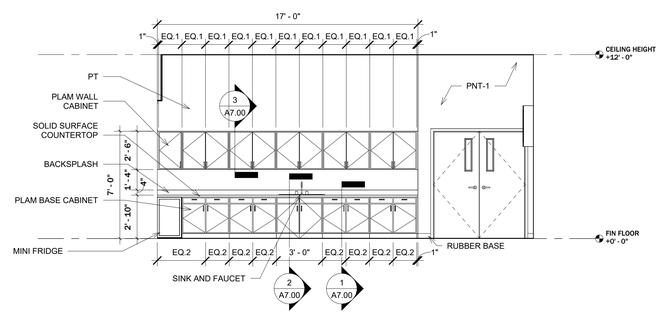

8 INTERIOR ELEVATION - MEETING ROOM 1/4" = 1'-0"

CLAYTON COUNTY LIBRARY SYSTEM

RIVERDALE LIBRARY ADDITION

420 Valley Hill Rd, Riverdale, GA 30274

© 2025 THESE DOCUMENTS REMAIN THE PROPERTY OF THE ARCHITECT AND MAY NOT BE USED OR REPRODUCED WITHOUT WRITTEN PERMISSION.

RELEASED FOR CONSTRUCTION

Revisions

No.	Date	Description
	8/29/25	Issued for Permit

GEORGIA REGISTERED No. 3072 PROFESSIONAL ARCHITECT JOHN GARDNER

Gardner Spencer Smith Tench & Jarbeau
A Professional Corporation for the Practice of Architecture
www.gsstj.com

Tower Place Building,
3340 Peachtree Road, N.E.
Suite 1800
Atlanta, Georgia 30326
404.522.8805
404.521.2118 (f)

PROJECT NO.
24105

SHEET TITLE
INTERIOR ELEVATIONS

SHEET NO.
A6.00

GENERAL NOTES:
1. SCRIBE ALL COUNTERTOPS TO WALL.

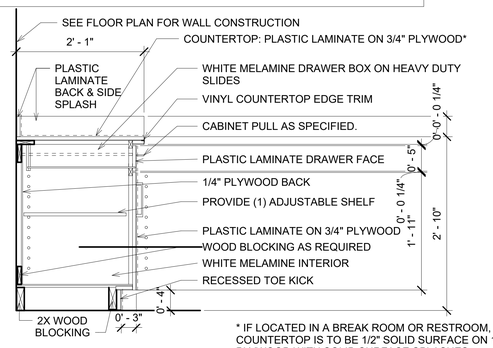

* IF LOCATED IN A BREAK ROOM OR RESTROOM, COUNTERTOP IS TO BE 1/2" SOLID SURFACE ON 1" PLYWOOD WITH SOLID SURFACE SPLASHES.

1 BASE CABINET SECTION DETAIL 1" = 1'-0"

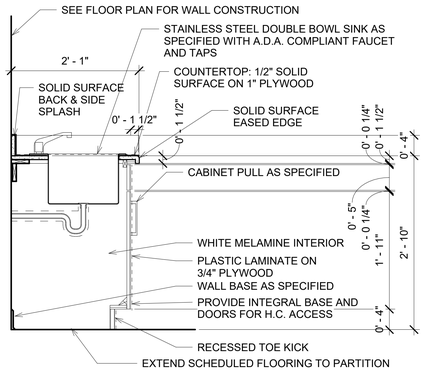

2 BASE CABINET W/ SINK SECTION DETAIL 1" = 1'-0"

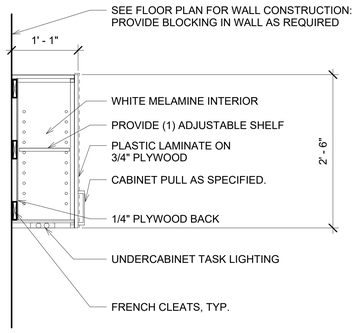

3 WALL CABINET 30"H 1" = 1'-0"

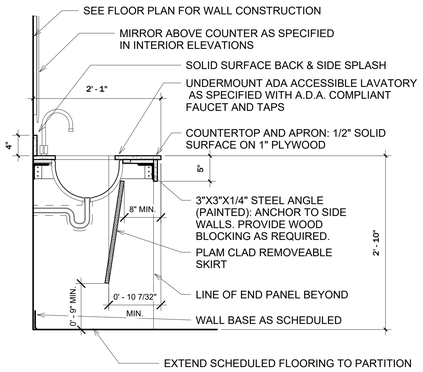

4 RESTROOM COUNTER DETAIL 1" = 1'-0"

CLAYTON COUNTY LIBRARY SYSTEM

RIVERDALE LIBRARY ADDITION

420 Valley Hill Rd, Riverdale, GA 30274

© 2025 THESE DOCUMENTS REMAIN THE PROPERTY OF THE ARCHITECT AND MAY NOT BE USED OR REPRODUCED WITHOUT WRITTEN PERMISSION.

RELEASED FOR CONSTRUCTION

Revisions

No.	Date	Description
	8/29/25	Issued for Permit

GEORGIA REGISTERED PROFESSIONAL ARCHITECT No. 3072 JOSEPH CLENN GARDNER JR.

Gardner Spencer Smith Tench & Jarbeau
A Professional Corporation for the Practice of Architecture
www.gsstj.com

Tower Place Building,
3340 Peachtree Road, N.E.
Suite 1800
Atlanta, Georgia 30326
404.522.8805
404.521.2118 (f)

PROJECT NO.
24105

SHEET TITLE
INTERIOR DETAILS - CASEWORK

SHEET NO.
A7.00

GENERAL NOTES

THIS STRUCTURE WAS DESIGNED IN ACCORDANCE WITH THE 2018 INTERNATIONAL BUILDING CODE WITH 2025 GEORGIA STATE AMENDMENTS AND ASCE 7–16

LOADS:

RISK CATEGORY = III

ROOF DEAD LOAD = 20 psf
ROOF DEAD LOAD = 5 psf
(AVAILABLE TO RESIST UPLIFT)

ROOF LIVE LOAD = 20 psf
(DOES NOT INCLUDE MECHANICAL UNITS)

GROUND SNOW LOAD, Pg = 5 psf

SEISMIC IMPORTANCE FACTOR, I = 1.25
MAPPED SPECTRAL ACCELERATIONS:
Ss = 0.169 , S1 = 0.082
SITE CLASS (SOIL TYPE); D (ASSUMED)
SPECTRAL RESPONSE COEFFICIENTS:
SDs = 0.180 , SD1 = 0.132
SEISMIC DESIGN CATEGORY: B
SEISMIC FORCE RESISTING SYSTEM:
STEEL SYSTEMS NOT SPECIFICALLY DETAILED FOR SEISMIC RESISTANCE
RESPONSE MODIFICATION FACTOR, R: 3.0
OVERSTRENGTH FACTOR, OMEGA: 3.0
DEFLECTION AMPLIFICATION FACTOR, Cd: 3.0
SEISMIC RESPONSE COEFFICIENT, Cs: 0.075
DESIGN BASE SHEAR: 8.0k

ANALYSIS PROCEDURE: E.L.F. PROCEDURE

BASIC WIND SPEED (ULTIMATE) 114 mph
BASIC WIND SPEED (SERVICE) 88 mph
WIND EXPOSURE CATEGORY: B
INTERNAL PRESSURE COEFFICIENT: ±0.18

COMPONENTS & CLADDING PRESSURES (ULTIMATE):

ZONE	1'	1	2	3	4	5
A=10	+16.0 −19.1	+16.0 −33.2	+16.0 −43.8	+16.0 −59.7	+19.1 −20.7	+19.1 −25.4
A=20	+16.0 −19.1	+16.0 −31.0	+16.0 −41.0	+16.0 −54.0	+18.2 −19.8	+18.2 −23.5
A=50	+16.0 −19.1	+16.0 −28.1	+16.0 −37.3	+16.0 −46.6	+17.1 −18.7	+17.1 −21.2
A=100	+16.0 −19.1	+16.0 −25.9	+16.0 −34.4	+16.0 −41.0	+16.3 −17.9	+16.3 −19.5

EDGE DISTANCE, a = 12'–0" (ROOF); 5'–3" (WALL)

SEE ASCE 7 FOR ZONE LAYOUT AND ADD. INFO.

GENERAL:

1. GENERAL CONTRACTOR SHALL VERIFY LOCATIONS OF MECHANICAL EQUIPMENT AND COORDINATE WITH THE STRUCTURAL DRAWINGS.
2. STRUCTURAL DRAWINGS INDICATE TYPICAL AND CERTAIN SPECIFIC CONDITIONS ONLY. SHOP DRAWINGS SHALL DETAIL ALL CONDITIONS IN ACCORDANCE WITH SPECIFIED STANDARDS AND THE SPECIFIC REQUIREMENTS OF THIS PROJECT.
3. CONTRACTOR IS TO VERIFY ALL DIMENSIONS AND CONDITIONS BEFORE EXECUTING ANY WORK.
4. THE STRUCTURE IS DESIGNED TO BE SELF–SUPPORTING AND STABLE AFTER THE STRUCTURE IS COMPLETE. IT IS THE CONTRACTOR'S RESPONSIBILITY TO DETERMINE ERECTION PROCEDURES AND SEQUENCE TO ENSURE THE SAFETY OF THE BUILDING AND ITS COMPONENTS DURING CONSTRUCTION. CONTRACTOR SHALL DESIGN AND PROVIDE TEMPORARY SUPPORT, SHORING AND BRACING FOR ALL STRUCTURAL COMPONENTS DURING CONSTRUCTION.
5. CONTRACTOR HAS SOLE RESPONSIBILITY FOR MEANS, METHODS, SAFETY, TECHNIQUES, SEQUENCES AND PROCEDURES FOR CONSTRUCTION. CONTRACTOR IS RESPONSIBLE FOR ENSURING THAT ALL CONSTRUCTION COMPLIES WITH OSHA REGULATIONS.
6. COMPLETE SHOP DRAWINGS FOR CONSTRUCTION OF ALL APPLICABLE SPECIALTY ITEMS INCLUDING BUT NOT LIMITED TO ALUMINUM STOREFRONT, PRECAST CONCRETE, CURTAIN WALL GLAZING SYSTEMS AND ORNAMENTAL GUARDRAILS SHALL BE SEALED AND SIGNED BY A PROFESSIONAL ENGINEER LICENSED IN THE PROJECT STATE AND SHALL BE AVAILABLE AT THE JOB SITE DURING THE TIMES OF INSPECTION.
7. REPRODUCTION OF ANY PORTION OF THE CONTRACT DOCUMENTS FOR SUBMITTALS OR SHOP DRAWINGS IS NOT PERMITTED AND SHALL RESULT IN REJECTION OF THAT SUBMITTAL OR SHOP DRAWING.

SHOP DRAWINGS:

1. CONTRACTOR SHALL SUBMIT SHOP DRAWINGS THAT ADEQUATELY DEPICT THE STRUCTURAL ELEMENTS AND CONNECTIONS SHOWN IN THE CONTRACT DOCUMENTS. STRUCTURAL DRAWINGS INDICATE TYPICAL AND CERTAIN CONDITIONS ONLY. SHOP DRAWINGS SHALL DETAIL ALL CONDITIONS IN ACCORDANCE WITH SPECIFIED STANDARDS AND SPECIFIC REQUIREMENTS OF THIS PROJECT.
2. SHOP DRAWINGS WILL BE REVIEWED FOR GENERAL COMPLIANCE WITH THE DESIGN INTENT OF THE CONTRACT DOCUMENTS ONLY. IT SHALL BE THE RESPONSIBILITY OF THE CONTRACTOR TO VERIFY COMPLIANCE WITH THE CONTRACT DOCUMENTS AS TO QUANTITY, LENGTH, ELEVATIONS, DIMENSIONS, ETC.
3. REVIEW OF SUBMITTALS OR SHOP DRAWINGS BY THE ARCHITECT/ENGINEER DOES NOT RELIEVE THE CONTRACTOR OF THE SOLE RESPONSIBILITY TO REVIEW AND CHECK ALL SUBMITTALS AND SHOP DRAWINGS BEFORE SUBMITTING TO THE ARCHITECT/ENGINEER. SHOP DRAWINGS SHALL BE REVIEWED, STAMPED, AND SIGNED BY THE CONTRACTOR PRIOR TO SUBMITTAL TO THE ARCHITECT/ENGINEER. DRAWINGS SUBMITTED WITHOUT REVIEW WILL BE RETURNED UNCHECKED.
4. REVIEW OF SUBMITTALS AND SHOP DRAWINGS BY THE ARCHITECT/ ENGINEER DOES NOT RELIEVE THE CONTRACTOR OF FULL RESPONSIBILITY FOR COMPLIANCE WITH THE CONTRACT DOCUMENTS. CONTRACTOR REMAINS SOLELY RESPONSIBLE FOR ERRORS AND OMISSIONS ASSOCIATED WITH THE PREPARATIONS OF SHOP DRAWINGS AS THEY PERTAIN TO MEMBER SIZES, DETAILS AND DIMENSIONS SPECIFIED IN THE CONTRACT DOCUMENTS.
5. REPRODUCTION OF ANY PORTION OF THE CONTRACT DOCUMENTS FOR SUBMITTALS OR SHOP DRAWINGS IS NOT PERMITTED AND SHALL RESULT IN REJECTION OF THAT SUBMITTAL OR SHOP DRAWING.
6. CONTRACT DOCUMENTS WILL GOVERN OVER SUBMITTALS AND SHOP DRAWINGS UNLESS OTHERWISE SPECIFIED IN WRITING BY THE ENGINEER. BE REVIEWED.

FOUNDATION:

1. THE FOUNDATION DESIGN USES MINIMUM ALLOWABLE DESIGN CRITERIA DETERMINED BY 2018 IBC.
2. THE FOUNDATION DESIGN IS BASED ON A NET ALLOWABLE SOIL BEARING PRESSURE OF 2,000 PSF FOR SHALLOW FOUNDATIONS ON EITHER PROPERLY COMPACED NATIVE SOILS OR STRUCTURAL FILL. SEE GEOTECH REPORT FOR SITE PREPARATION PROCEDURES.
3. A REGISTERED GEOTECHNICAL ENGINEER SHALL VERIFY THE DESIGN SOIL BEARING CAPACITY AND SHALL VERIFY THE CONDITION AND/OR ADEQUACY OF ALL SUBGRADE AND FILL PRIOR TO PLACEMENT OF FOOTINGS AND SLABS.

CONCRETE:

1. CONCRETE FOR ALL STRUCTURAL ELEMENTS SHALL HAVE A MINIMUM 28 DAY COMPRESSIVE STRENGTH OF 3,000 psi, AND SHALL BE NORMAL WEIGHT WITH A W/CM = 0.55 MAX.
2. UNLESS NOTED OTHERWISE, SLABS ON GRADE SHALL BE A MINIMUM OF FOUR INCHES THICK, SHALL BE REINFORCED WITH 6x6–W1.4xW1.4 W.W.F. LOCATED 1½" BELOW THE TOP OF SLAB AND PLACED OVER A 4" GRADED AGGREGATE BASE AND A MINIMUM 12 MIL VAPOR BARRIER.
3. ALL CONCRETE EXPOSED TO WEATHER SHALL HAVE A MAXIMUM WATER/CEMENT RATIO OF 0.45 AND SHALL BE AIR ENTRAINED 5% +/–1.
4. ALL CONCRETE CONSTRUCTION SHALL BE IN ACCORDANCE WITH THE REQUIREMENTS OF THE LATEST EDITIONS OF ACI 301 "SPECIFICATIONS FOR STRUCTURAL CONCRETE FOR BUILDINGS" AND ACI 318 "BUILDING CODE REQUIREMENTS FOR STRUCTURAL CONCRETE".
5. CONCRETE TEST REPORTS SHALL BE AVAILABLE AT THE JOB SITE.

REINFORCING:

1. DETAILING, FABRICATION AND PLACING OF REINFORCING STEEL, SHALL BE IN ACCORDANCE WITH THE LATEST EDITION OF ACI 315 "DETAILS AND DETAILING OF CONCRETE REINFORCING", AND CRSI MANUAL OF STANDARD PRACTICE.
2. REINFORCING STEEL SHALL BE ASTM A615, GRADE 60 DEFORMED BARS, UNO. LAP SPLICE LENGTH SHALL BE A MINIMUM "CLASS B" TENSION SPLICE, UNO.
3. WELDED WIRE FABRIC SHALL COMPLY WITH ASTM A185 AND SHALL BE LAPPED A MINIMUM OF 8" ON ALL SIDES AND SPLICES.
4. BRICK AND CMU VENEER TIES SHOULD BE A MINIMUM 9 GAUGE CORROSION–RESISTANT WIRE @ 16" MAX. HORIZONATALLY, AND 16" O.C. VERTICALLY, SECURELY ATTACHED TO SUPPORT WALL.
5. REINFORCING STEEL SHALL HAVE THE FOLLOWING CONCRETE COVER UNLESS NOTED OTHERWISE:

CONCRETE CAST AGAINST EARTH (NOT FORMED) 3"

FORMED CONCRETE EXPOSED TO EARTH OR WEATHER
#6 BARS AND LARGER 2"
#5 BARS AND SMALLER 1–1/2"

CONCRETE NOT EXPOSED TO EARTH OR WEATHER
SLABS AND WALLS 1"

5. PROVIDE CONTINUOUS REINFORCING WHEREVER POSSIBLE; SPLICE ONLY AS SHOWN OR APPROVED; STAGGER SPLICES WHERE POSSIBLE; USE CLASS "B" TENSION SPLICE UNLESS NOTED OTHERWISE. DOWELS SHALL MATCH THE SIZE AND SPACING OF THE SPECIFIED REINFORCING AND SHALL BE LAPPED WITH CLASS "B" TENSION SPLICES. UNLESS NOTED OTHERWISE LAP LENGTHS EXPRESSED IN NUMBER OF BAR DIAMETERS SHALL BE AS FOLLOWS:

BAR SIZE	CLASS	3,000	4,000	5,000
#6 OR SMALLER	A B	44 DIA. 57 DIA.	38 DIA. 49 DIA.	34 DIA. 44 DIA.
#7 OR LARGER	A B	55 DIA. 71 DIA.	47 DIA. 62 DIA.	42 DIA. 55 DIA.

TABLE IS FOR NORMAL WEIGHT CONCRETE. INCREASE THE ABOVE LAP LENGTHS BY A FACTOR OF 1.3 FOR BARS WITH MORE THAN 12" OF FRESH CONCRETE CAST BELOW THEM (I.E. TOP BARS). INCREASE LAP LENGTHS BY A FACTOR OF 1.3 FOR WHEN LIGHT WEIGHT CONCRETE IS USED.

STEEL:

1. STRUCTURAL STEEL SHALL CONFORM TO ASTM A992, EXCEPT STRUCTURAL TUBING (HSS) SHALL CONFORM TO ASTM A500 GRADE C, AND PIPE SHAPES SHALL CONFORM TO ASTM A53 GRADE B. ANGLES AND MISCELLANEOUS PLATES AND BARS MAY CONFORM TO ASTM A36.
2. ALL BOLTED CONNECTIONS SHALL BE ASSEMBLED AND INSPECTED ACCORDING TO "SPECIFICATIONS FOR STRUCTURAL JOINTS USING ASTM A325 AND ASTM A490 BOLTS".
3. IN GENERAL, CONNECTIONS SHALL BE FIELD BOLTED. ALL BOLTS DESIGNATED "SLIP CRITICAL" OR "FULLY TIGHTENED" SHALL BE TIGHTENED TO THE MINIMUM PRETENSION VALUE SHOWN IN TABLE J3.1 OF THE AISC SPECIFICATION FOR STRUCTURAL STEEL BUILDINGS. IN ADDITION, CONNECTIONS DESIGNATED "SLIP CRITICAL" SHALL HAVE PROPERLY PREPARED FAYING SURFACES TO MEET CLASS A SURFACE CONDITION, U.N.O. "SLIP CRITICAL" CONNECTIONS SHALL INCLUDE ALL BOLTS IN MOMENT CONNECTIONS. "FULLY TIGHTENED" CONNECTIONS SHALL INCLUDE ALL BOLTS LOADED IN DIRECT TENSION (SUCH AS HANGERS), BRACED FRAME CONNECTIONS, GIRT CONNECTIONS & MEMBERS THAT ARE PART OF THE MAIN LATERAL RESISTING SYSTEM. DIRECT TENSION INDICATOR (DTI) WASHERS OR TENSION CONTROL BOLTS (TCB"S) SHALL BE USED AT THESE CONDITIONS. ALL OTHER BOLTS SHALL BE, AT MINIMUM, SNUG TIGHT.
4. ANCHOR RODS SHALL CONFORM TO ATSM F1554, GRADE 36, UNO.
5. ALL WELDING SHALL BE IN ACCORDANCE WITH THE AWS STRUCTURAL WELDING CODE AND SHALL BE PERFORMED BY CERTIFIED WELDERS USING E70XX ELECTRODES.
6. STRUCTURAL STEEL SHALL BE FABRICATED AND ERECTED IN ACCORDANCE WITH THE "AMERICAN INSTITUTE OF STEEL CONSTRUCTION – SPECIFICATIONS, ALLOWABLE STRESS DESIGN, LATEST EDITION.
7. GROUT BELOW BASE PLATES SHALL BE HIGH–STRENGTH, NON–SHRINK, NONMETALLIC GROUT, WITH A 28–DAY MINIMUM COMPRESSIVE STRENGTH OF 7,000 PSI. 2

STEEL ROOF DECK:

1. STEEL ROOF DECK SHALL BE 1.5", 22 GAUGE, GR 50 GALVANIZED WIDE RIB, TYPE "B" (3 SPAN MIN. CONDITION). SUPPORT FASTENERS SHALL BE HILTI X–HSN 24 PAFs. @ 12" MAX UNO. SIDELAP FASTENERS SHALL BE #10 TEK SCREWS @ 12" MAX UNO.

OPEN WEB STEEL JOISTS:

1. STEEL JOIST CONSTRUCTION SHALL CONFORM TO STEEL JOIST INSTITUTE LOAD TABLES, "STANDARD SPECIFICATIONS", AND "CODE OF STANDARD PRACTICE".
2. IN ADDITION TO DEAD AND LIVE LOADS, STEEL ROOF JOISTS SHALL BE DESIGNED AND FABRICATED TO RESIST A NET WIND UPLIFT OF 15 PSF (SERVICE LOAD), UNLESS NOTED OTHERWISE.
3. ALL JOISTS SHALL BE DESIGNED FOR A CONCENTRATED LIVE BEND LOAD OF 200 POUNDS LOCATED AT ANY POSITION ALONG THE TOP OR BOTTOM CHORD CONCURRENTLY WITH ALL OTHER DESIGN LOADS.
4. SUBMIT SHOP DRAWINGS COMPLETELY DETAILING THE JOISTS FOR ERECTION. INCLUDE BRIDGING AND CONNECTIONS. CALCULATIONS SHALL BE SEALED, SIGNED AND DATED BY A STRUCTURAL ENGINEER REGISTERED IN THE PROJECT STATE.
5. JOIST SEATS AT PERIMETER SHALL BE DESIGNED FOR 1.0K ROLLOVER (SERVICE WIND)

LIGHT GAUGE STEEL FRAMING:

1. LIGHT GAUGE STEEL FRAMING SYSTEM SHALL BE DESIGNED IN ACCORDANCE WITH ACCEPTED ENGINEERING PRINCIPLES AND GOVERNING CODES. THE DESIGN SHALL BE PERFORMED BY A PROFESSIONAL ENGINEER REGISTERED IN THE STATE OF GEORGIA. SHOP DRAWINGS SHALL BE SUBMITTED WHICH BEAR THE SIGNATURE, DATE, AND SEAL OF THE ENGINEER. SHOP DRAWINGS SHALL CLEARLY INDICATE CONNECTIONS AND MATERIALS USED. SECTIONS AND DETAILS SHOWN ON THE DRAWINGS ARE FOR CONCEPT ONLY.
2. LIGHT GAUGE STEEL FRAMING SHOP DRAWINGS SHALL BE SUBMITTED TO THE STRUCTURAL ENGINEER OF RECORD FOR APPROVAL PRIOR TO FABRICATION SHOWING WALL SECTIONS COORDINATED WITH DRAWINGS SHOWING FRAMING, ACCESSORIES, ANCHORAGE AND CONNECTION DETAILS.
3. MATERIAL SPECIFICATIONS FOR LIGHT–GAUGE STEEL:
16 GA. OR HEAVIER: ASTM A–446, Fy = 50 KSI MIN.
18 GA. OR LIGHTER: ASTM A–446, Fy = 33 KSI MIN.
4. GALVANIZING: MINIMUM G–60 COATING
5. ALL STUDS AND JOIST MEMBERS SHALL BE STRUCTURAL (14 TO 20 GAUGE), AND HAVE STIFFENED FLANGES.
6. CONNECTION MATERIAL GAUGE MATCH STUD GAUGE U.N.O. CLIP ANGLES SHALL BE 14 GA. MINIMUM.
7. BUILT–UP MEMBERS FASTEN TOGETHER WITH 1" LONG STITCH WELDS OR #12 SCREWS AT 12" O.C. MAXIMUM, EACH FLANGE, AND EACH TRACK.
8. PROVIDE BRIDGING AT 5' MAXIMUM VERTICAL SPACING IN WALLS.
9. STUDS SHALL BE INSTALLED TO SEAT SQUARELY (WITHIN 1/16") AGAINST THE WEB PORTION OF THE TOP AND BOTTOM TRACKS. TRACKS SHALL REST ON A CONTINUOUS, UNIFORM BEARING SURFACE. ALL STUD MEMBERS SHALL BE ATTACHED TO TRACKS WITH #8–18 LOW PROFILE HEAD SCREWS AT EACH STUD FLANGE, EACH END. MEMBERS 18 GAUGE OR HEAVIER MAY BE WELDED.
10. TEMPORARY BRACING SHALL BE PROVIDED AND LEFT IN PLACE UNTIL WORK IS PERMANENTLY STABILIZED.
11. SPLICING OF MEMBERS SPANNING BETWEEN SUPPORTS SHALL NOT BE PERMITTED.
12. VERTICAL ALIGNMENT (PLUMBNESS) OF STUDS SHALL BE WITHIN 1/960TH (1/8" IN 10'–0") OF THE SPAN.
13. HORIZONTAL ALIGNMENT (LEVELNESS) OF WALLS SHALL BE WITHIN 1/960TH (1/8" IN 10'–0") OF THEIR RESPECTIVE LENGTHS.
14. SPACING OF STUDS SHALL NOT BE MORE THAN ± 1/8" FROM THE DESIGNED SPACING PROVIDING THAT THE CUMULATIVE ERROR DOES NOT EXCEED THE REQUIREMENTS OF THE FINISHED MATERIALS.
15. PROVIDE DEEP TRACK ASSEMBLY AT TOPS OF ALL NON–LOAD BEARING STUD WALLS TO ALLOW FOR MOVEMENT OF STRUCTURE. ARCHITECT SHALL REVIEW IN PLACE STEEL STUD CONSTRUCTION PRIOR TO THE INSTALLATION OF GYPSUM WALL BOARD OR SHEATHING.
16. DESIGN COLD FORMED STEEL FRAMING SYSTEMS TO WITHSTAND THE INDICATED DESIGN LOADS WITHOUT EXCEEDING THE FOLLOWING DEFLECTION LIMITS:

MEMBERS SUPPORTING MASONRY: L/600 OR ½" MAXIMUM
MEMBERS SUPPORTING OTHER MATERIALS: L/360 OR 1" MAXIMUM

SPECIAL INSPECTIONS NOTES:

1. DURING CONSTRUCTION, SPECIAL STRUCTURAL INSPECTIONS SHALL BE PERFORMED IN ACCORDANCE WITH THE REQUIREMENTS OF THE GOVERNING BUILDING CODE. AN APPROVED SPECIAL INSPECTOR WITH QUALIFICATIONS SATISFACTORY TO THE BUILDING OFFICIAL SHALL PERFORM SPECIAL INSPECTIONS. ALL SPECIAL STRUCTURAL INSPECTION REPORTS SHALL BE PREPARED BY AND BEAR THE SEAL OF THE SPECIAL INSPECTOR, AND ALL REPORTS SHALL BE SUBMITTED TO THE BUILDING OFFICIAL, ARCHITECT, AND TO THE STRUCTURAL ENGINEER.
2. SPECIAL INSPECTOR SHALL PREPARE THE REQUIRED QUALITY ASSURANCE PLANS & SUBMIT PLAN TO BUILDING OFFICIAL, ARCHITECT, AND THE STRUCTURAL ENGINEER FOR APPROVAL PRIOR TO CONSTRUCTION.
3. THE SPECIAL INSPECTOR SHALL OBSERVE THE WORK FOR CONFORMANCE WITH THE PERMITTED CONSTRUCTION DOCUMENTS. THE SPECIAL INSPECTOR SHALL FURNISH PERIODIC INSPECTION REPORTS TO THE BUILDING OFFICIAL AND THE REGISTERED DESIGN PROFESSIONALS OF RECORD. THE FREQUENCY OF REPORTS SHALL BE AS AGREED UPON BY THE BUILDING OFFICIAL. ALL NONCONFORMING ITEMS SHALL BE BROUGHT TO THE IMMEDIATE ATTENTION OF THE CONTRACTOR FOR CORRECTION, THEN, IF CORRECTED, THE BUILDING OFFICIAL, ARCHITECT, AND THE STRUCTURAL ENGINEER.
4. THE SPECIAL INSPECTOR, UPON COMPLETION OF THE WORK AND PRIOR TO THE ISSUANCE OF A CERTIFICATE OF OCCUPANCY, SHALL SUBMIT A SIGNED & SEALED FINAL REPORT DOCUMENTING COMPLETION OF ALL REQUIRED SPECIAL INSPECTIONS AND CORRECTION OF ANY DISCREPANCIES NOTED IN THE PRIOR REPORTS.
5. SPECIAL INSPECTION REPORTS AND FINAL REPORT IN ACCORDANCE WITH SECTION 1704.2.4 SHALL BE SUBMITTED TO THE BUILDING OFFICIAL PRIOR TO THE TIME THAT PHASE OF WORK IS APPROVED FOR OCCUPANCY
6. ALL STRUCTURAL ELEMENTS OF THE BUILDING FRAME SHALL BE INSPECTED FOR CONFORMANCE WITH THE CONTRACT DOCUMENTS AND REQUIREMENTS OF THE GOVERNING BUILDING CODE, INCLUDING, BUT NOT BE LIMITED TO THE SECTIONS LISTED ON THIS DRAWING.
7. SPECIAL INSPECTIONS FOR WIND RESISTANCE ARE NOT REQUIRED.
8. SPECIAL INSPECTIONS FOR SEISMIC RESISTANCE ARE REQUIRED.

SCHEDULE OF SPECIAL INSPECTIONS

MATERIAL / ACTIVITY	SERVICE	APPLICABLE TO THIS PROJECT	
		Y/N	EXTENT
1705.2.1 STEEL CONSTRUCTION			
FABRICATOR AND ERECTOR DOCUMENTS (VERIFY REPORTS AND CERTIFICATES AS LISTED IN AISC 360, SECTION N 3.2 FOR COMPLIANCE WITH CONSTRUCTION DOCUMENTS)	SUBMITTAL REVIEW	Y	EACH SUBMITTAL
MATERIAL VERIFICATION OF STRUCTURAL STEEL	SHOP* AND FIELD INSPECTION	Y	PERIODIC
STRUCTURAL STEEL WELDING:			
1. INSPECTION TASKS PRIOR TO WELDING PER AISC 360 TABLE N5.4-1	SHOP* AND FIELD INSPECTION	Y	OBSERVE OR PERFORM AS NOTED
2. INSPECTION TASKS DURING TO WELDING PER AISC 360 TABLE N5.4-2	SHOP* AND FIELD INSPECTION	Y	OBSERVE
3. INSPECTION TASKS AFTER TO WELDING PER AISC 360 TABLE N5.4-3	SHOP* AND FIELD INSPECTION	Y	OBSERVE OR PERFORM AS NOTED
4. NONDESTRUCTIVE TESTING (NDT) OF WELDED JOINTS		Y	
A. COMPLETE PENETRATION GROOVE WELDS 5/16" OR GREATER IN RISK CATEGORY III OR IV	SHOP OR FIELD ULTRASONIC TESTING - 100%	N	PERIODIC
B. COMPLETE PENETRATION GROOVE WELDS 5/16" OR GREATER IN RISK CATEGORY II	SHOP OR FIELD ULTRASONIC TESTING - 10% OF WELDS MINIMUM	Y	PERIODIC
C. WELDED JOINTS SUBJECT TO FATIGUE WHEN REQUIRED BY AISC 360, APPENDIX 3, TABLE A-3.1	SHOP OR FIELD RADIOGRAPHIC OR ULTRASONIC TESTING	N	PERIODIC
D. FABRICATOR'S NDT REPORTS WHEN FABRICATOR PERFORMS NDT	VERIFY REPORTS	N	EACH SUBMITTAL
STRUCTURAL STEEL BOLTING:	SHOP AND FIELD INSPECTION	N	
1. INSPECTION TASKS PRIOR TO BOLTING (OBSERVE, OR PERFORM TASKS FOR EACH BOLTED CONNECTION, IN ACCORDANCE WITH QA TASKS LISTED IN AISC 360, TABLE N5.6-1)		N	OBSERVE OR PERFORM AS NOTED
2. INSPECTION TASKS DURING BOLTING (OBSERVE THE QA TASKS LISTED IN AISC 360, TABLE N5.6-2)		Y	OBSERVE
A. PRE-TENSIONED & SLIP CRITICAL JOINTS		Y	
1) TURN-OF-NUT WITH MATCHING MARKINGS		Y	PERIODIC
2) DIRECT TENSION INDICATOR		Y	PERIODIC
3) TWIST-OFF TYPE TENSION CONTROL BOLT		Y	PERIODIC
4) TURN-OF-NUT WITHOUT MATCHING MARKINGS		Y	CONTINUOUS
5) CALIBRATED WRENCH		Y	CONTINUOUS
B. SNUG TIGHT JOINTS		Y	PERIODIC
3. INSPECTION TASKS AFTER BOLTING (PERFORM TASKS FOR EACH BOLTED CONNECTION IN ACCORDANCE WITH QA TASKS LISTED IN AISC 360, TABLE N5.6-3)		Y	PERFORM
VISUAL INSPECTION OF EXPOSED CUT SURFACES OF GALVANIZED STRUCTURAL STEEL MAIN MEMBERS AND EXPOSED CORNERS OF THE RECTANGULAR HSS FOR CRACKS SUBSEQUENT TO GALVANIZING	SHOP* AND FIELD INSPECTION	Y	PERIODIC
EMBEDMENTS (VERIFY DIAMETER, GRADE, TYPE, LENGTH, EMBEDMENT. SEE 1705.3 FOR ANCHORS)	FIELD INSPECTION	Y	PERIODIC
VERIFY MEMBER LOCATIONS, BRACES, STIFFENERS, AND APPLICATION OF JOINT DETAILS AT EACH CONNECTION COMPLY WITH CONSTRUCTION DOCUMENT	FIELD INSPECTION	Y	PERIODIC
1705.2.2 COLD-FORMED STEEL DECK			
MANUFACTURER DOCUMENTS (VERIFY REPORTS AND CERTIFICATES AS LISTED IN SDI QA/QC, SECTION 2, PARAGRAPHS 2.1 AND 2.2 FOR COMPLIANCE WITH CONSTRUCTION DOCUMENTS)	SUBMITTAL REVIEW	Y	EACH SUBMITTAL
MATERIAL VERIFICATION OF STEEL DECK, MECHANICAL FASTENERS AND WELDING MATERIALS	SHOP* AND FIELD INSPECTION	Y	PERIODIC
COLD-FORMED STEEL DECK PLACEMENT:	SHOP* AND FIELD INSPECTION		
1. INSPECTION TASKS PRIOR TO DECK PLACEMENT (PERFORM THE QA TASKS LISTED IN SDI QA/QC, APPENDIX 1 TABLE 1.1)		Y	PERFORM
2. INSPECTION TASKS AFTER DECK PLACEMENT (PERFORM THE QA TASKS LISTED IN SDI QA/QC, APPENDIX 1 TABLE 1.2)		Y	PERFORM
COLD-FORMED STEEL DECK WELDING:	SHOP* AND FIELD INSPECTION		
1. INSPECTION TASKS PRIOR TO WELDING (OBSERVE THE QA TASKS LISTED IN SDI QA/QC, APPENDIX 1 TABLE 1.3)		N	OBSERVE
2. INSPECTION TASKS DURING WELDING (OBSERVE THE QA TASKS LISTED IN SDI QA/QC, APPENDIX 1 TABLE 1.4)		N	OBSERVE
3. INSPECTION TASKS AFTER WELDING (PERFORM THE QA TASKS LISTED IN SDI QA/QC, APPENDIX 1 TABLE 1.5)		N	PERFORM
COLD-FORMED STEEL DECK MECHANICAL FASTENING:	SHOP* AND FIELD INSPECTION		
1. INSPECTION TASKS PRIOR TO MECHANICAL FASTENING (OBSERVE THE QA TASKS LISTED IN SDI QA/QC, APPENDIX 1 TABLE 1.6)		Y	OBSERVE
2. INSPECTION TASKS DURING MECHANICAL FASTENING (OBSERVE THE QA TASKS LISTED IN SDI QA/QC, APPENDIX 1 TABLE 1.7)		Y	OBSERVE
3. INSPECTION TASKS AFTER MECHANICAL FASTENING (PERFORM THE QA TASKS LISTED IN SDI QA/QC, APPENDIX 1 TABLE 1.8)		Y	PERFORM

SCHEDULE OF SPECIAL INSPECTIONS

MATERIAL / ACTIVITY	SERVICE	APPLICABLE TO THIS PROJECT	
		Y/N	EXTENT
1705.2.3 OPEN-WEB STEEL JOISTS AND JOISTS GIRDERS			
INSTALLATION OF OPEN-WEB STEEL JOISTS AND JOIST GIRDERS.			
1. END CONNECTIONS - WELDED OR BOLTED	PER SJI CJ OR SJI 100	Y	PERIODIC
2. BRIDGING - HORIZONTAL OR DIAGONAL			
A. STANDARD BRIDGING	PER SJI CJ OR SJI 100	Y	PERIODIC
B. BRIDGING THAT DIFFERS FROM THE SPECIFICATIONS LISTED IN SJI CJ OR SJI 100.		Y	PERIODIC
1705.3 CONCRETE CONSTRUCTION			
INSPECTION AND PLACEMENT VERIFICATION OF REINFORCING STEEL	SHOP* AND FIELD INSPECTION	Y	PERIODIC
INSPECTION OF ANCHORS CAST IN CONCRETE.	SHOP* AND FIELD INSPECTION	Y	PERIODIC
INSPECTION OF ANCHORS POST-INSTALLED IN HARDENED CONCRETE MEMBERS PER RESEARCH REPORTS. OR, IF NO SPECIFIC REQUIREMENTS ARE PROVIDED, REQUIREMENTS SHALL BE PROVIDED BY THE REGISTERED DESIGN PROFESSIONAL AND APPROVED BY THE BUILDING OFFICIAL, INCLUDING VERIFICATION OF ANCHOR TYPE, ANCHOR DIMENSIONS, HOLE DIMENSIONS, HOLE CLEANING PROCEDURES, ANCHOR SPACING, EDGE DISTANCES, CONCRETE MINIMUM THICKNESS, ANCHOR EMBEDMENT AND TIGHTENING TORQUE	FIELD INSPECTION	Y	PERIODIC OR AS REQUIRED BY THE RESEARCH REPORT ISSUED BY AN APPROVED SOURCE
1. ADHESIVE ANCHORS INSTALLED IN HORIZONTAL OR UPWARD-INCLINED ORIENTATION THAT RESIST SUSTAINED TENSION LOADS.		N	CONTINUOUS
2. MECHANICAL AND ADHESIVE ANCHORS OTHER THAN THOSE DEFINED IN NOTE 1.		Y	PERIODIC
VERIFY USE OF APPROVED DESIGN MIX	SHOP* AND FIELD INSPECTION	Y	PERIODIC
PRIOR TO PLACEMENT, FRESH CONCRETE SAMPLING, PERFORM SLUMP AND AIR CONTENT TESTS AND DETERMINE TEMPERATURE OF CONCRETE AND PERFORM ANY OTHER TESTS AS SPECIFIED IN CONSTRUCTION DOCUMENTS.	SHOP* AND FIELD INSPECTION	Y	CONTINUOUS
INSPECTION OF CONCRETE AND SHOTCRETE PLACEMENT FOR PROPER APPLICATION TECHNIQUES	SHOP* AND FIELD INSPECTION	Y	CONTINUOUS
VERIFY MAINTENANCE OF SPECIFIED CURING TEMPERATURE AND TECHNIQUES	SHOP* AND FIELD INSPECTION	Y	PERIODIC
ERECTION OF PRECAST CONCRETE MEMBERS		N	PERIODIC
VERIFICATION OF IN-SITU CONCRETE STRENGTH PRIOR TO REMOVAL OF SHORES AND FORMS FROM BEAMS AND STRUCTURAL SLABS	FIELD TESTING AND REVIEW OF LABORATORY REPORTS	N	PERIODIC
INSPECTION OF FORMWORK FOR SHAPE, LINES, LOCATION AND DIMENSIONS	FIELD INSPECTION	Y	PERIODIC
CONCRETE STRENGTH TESTING AND VERIFICATION OF COMPLIANCE WITH CONSTRUCTION DOCUMENTS	FIELD TESTING AND REVIEW OF LABORATORY REPORTS	Y	PERIODIC
1705.6 SOILS			
VERIFY MATERIALS BELOW SHALLOW FOUNDATIONS ARE ADEQUATE TO ACHIEVE THE DESIGN BEARING CAPACITY.	FIELD INSPECTION	Y	PERIODIC
VERIFY EXCAVATIONS ARE EXTENDED TO PROPER DEPTH AND HAVE REACHED PROPER MATERIAL.	FIELD INSPECTION	Y	PERIODIC
PERFORM CLASSIFICATION AND TESTING OF COMPACTED FILL MATERIALS.	FIELD INSPECTION	Y	PERIODIC
VERIFY USE OF PROPER MATERIALS, DENSITIES, AND LIFT THICKNESSES DURING PLACEMENT AND COMPACTION OF CONTROLLED FILL	FIELD INSPECTION	Y	CONTINUOUS
PRIOR TO PLACEMENT OF CONTROLLED FILL, OBSERVE SUBGRADE AND VERIFY THAT SITE HAS BEEN PREPARED PROPERLY	FIELD INSPECTION	Y	PERIODIC

NOTES:

THE INSPECTION AND TESTING AGENT(S) SHALL BE ENGAGED BY THE OWNER OR THE OWNER'S AGENT, AND NOT BY THE CONTRACTOR OR SUBCONTRACTOR WHOSE WORK IS TO BE INSPECTED OR TESTED. ANY CONFLICT OF INTEREST MUST BE DISCLOSED TO THE BUILDING OFFICIAL PR

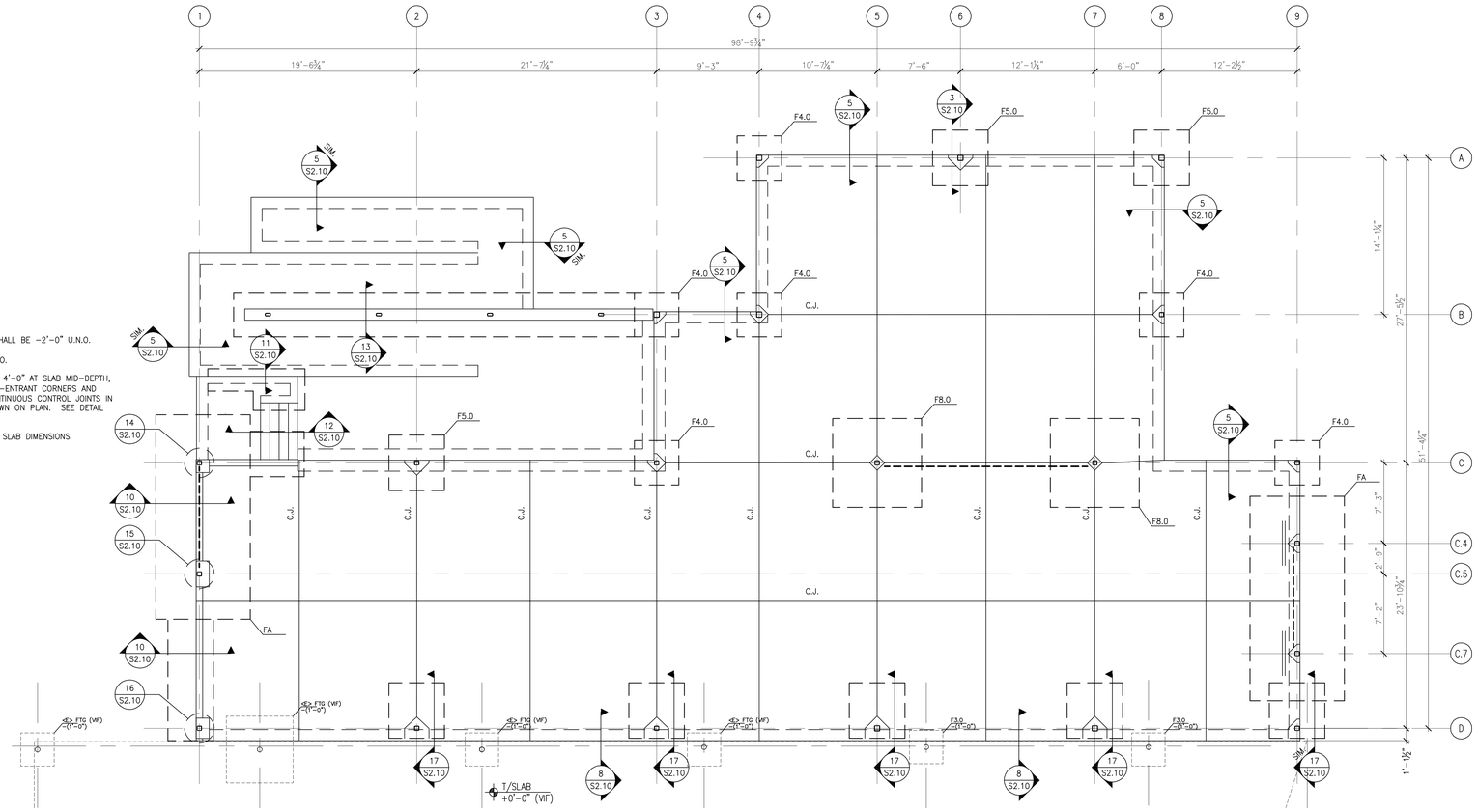

1 SLAB AND FOUNDATION PLAN
S1.10 SCALE: 3/16"=1'-0"

FOUNDATION PLAN NOTES:

1. VERIFY ALL DIMENSIONS AND ELEVATIONS WITH ARCHITECTURAL DRAWINGS BEFORE COMMENCING CONSTRUCTION. ALL DISCREPANCIES SHALL BE BROUGHT TO THE ATTENTION OF THE ARCHITECT AND THE STRUCTURAL ENGINEER. FOR ADDITIONAL INFORMATION SEE ARCHITECTURAL DRAWINGS.
2. TOP OF CONCRETE SLAB=901.04' AND IS TO MATCH EXISTING F.F. ELEV. TOP OF SLAB = +0'-0". ALL OTHER DIMENSIONS ARE MEASURED FROM THIS DATUM.
3. SLAB ON GRADE SHALL BE 4" NORMAL WEIGHT CONCRETE, REINFORCED WITH 6x6 W1.4xW1.4 W.W.F. LOCATED 1½" BELOW THE TOP OF SLAB, UNO.
4. C.J. INDICATES CONTROL JOINT, SEE 7/S2.10. JOINTS ARE EQUALLY SPACED BETWEEN GRIDS/EOS.
5. Fx.x INDICATES FOOTING TYPE, SEE 1/S2.10 FOR FOOTING SCHEDULE. CENTER ALL FOOTINGS ON COLUMNS, TYP. U.N.O.
6. TOP OF FOOTING ELEVATION SHALL BE -2'-0" U.N.O.
7. COLUMNS ARE HSS6x6x⅜ U.N.O.
8. ═══ INDICATES (2) #4 x 4'-0" AT SLAB MID-DEPTH, 3" APART. PROVIDE AT ALL RE-ENTRANT CORNERS AND INTERSECTIONS, AT ALL DISCONTINUOUS CONTROL JOINTS IN SLAB-ON-GRADE AND AS SHOWN ON PLAN. SEE DETAIL 7/S2.10
9. SEE ARCH. FOR ALL EDGE OF SLAB DIMENSIONS

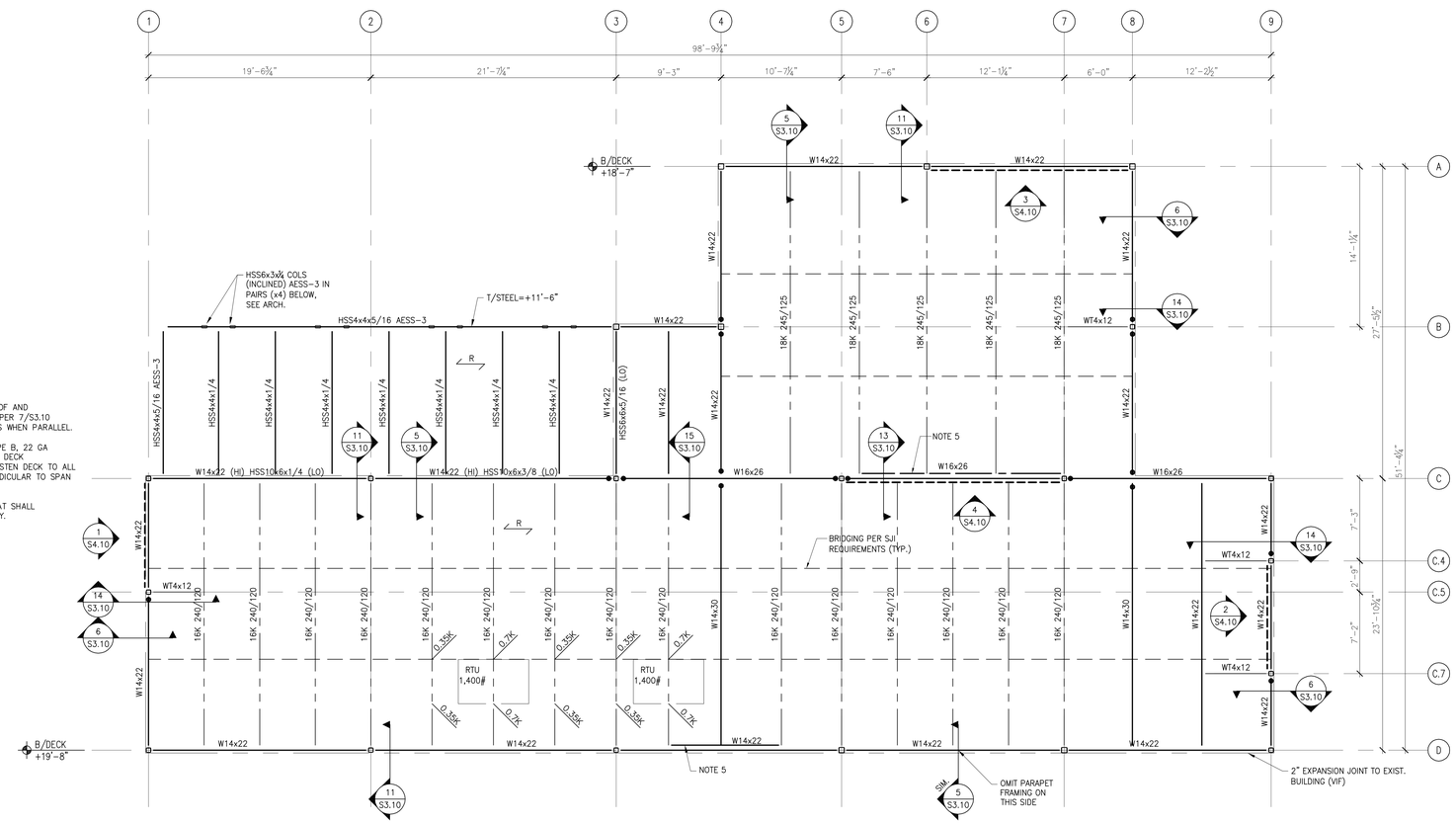

2 ROOF FRAMING PLAN
S1.10 SCALE: 3/16"=1'-0"

ROOF FRAMING PLAN NOTES:

1. VERIFY ALL DIMENSIONS AND ELEVATIONS WITH ARCHITECTURAL DRAWINGS BEFORE COMMENCING CONSTRUCTION. ALL DISCREPANCIES SHALL BE BROUGHT TO THE ATTENTION OF THE ARCHITECT AND THE STRUCTURAL ENGINEER. FOR ADDITIONAL INFORMATION SEE ARCHITECTURAL DRAWINGS.
2. SEE ARCHITECTURE FOR TOP OF FINISHED ROOF ELEVATIONS, ROOF SLOPES AND ROOF DRAIN LOCATIONS.
3. COORDINATE SIZE AND LOCATION OF ALL OPENINGS IN ROOF WITH ARCH, MECH, AND PLUMBING DRAWINGS.
4. TOP OF STEEL ELEVATION VARIES, SEE PLAN. BOTTOM OF DECK (B/DECK) ELEV. IS SHOWN, LOWER STEEL AS NEEDED FOR JOIST BEARING.
5. HSS4x2½x¼ (LSH) BETWEEN JOIST SEATS. DECK MUST BE WELDED TO HSS. SEE 13/S3.10
6. SEE 4/S3.10 FOR TYPICAL CONNECTIONS.
7. PROVIDE FRAMING AROUND OPENINGS IN ROOF AND UNDER MECHANICAL UNIT SUPPORT CURBS PER 7/S3.10 UNTS SHALL BE CENTERED BETWEEN JOISTS WHEN PARALLEL.
8. R INDICATES SPAN OF 1½" DEEP, TYPE B, 22 GA GALVANIZED STEEL WIDE RIB ROOF DECK (THREE SPAN MIN. CONDITION). FASTEN DECK TO ALL SUPPORTS PARALLEL AND PERPENDICULAR TO SPAN IN 36/4 (4) PATTERN.
9. ● INDICATES BEAM END CONNECTION THAT SHALL BE MADE WITH STANDARD HOLES ONLY.

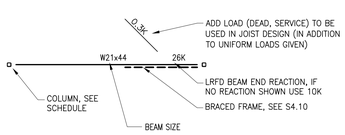

© 2025 THESE DOCUMENTS REMAIN THE PROPERTY OF THE ARCHITECT AND MAY NOT BE USED OR REPRODUCED WITHOUT WRITTEN PERMISSION.

RIVERDALE LIBRARY ADDITION

420 VALLEY HILL RD.
RIVERDALE, GA 30274

RELEASED FOR CONSTRUCTION

REVISIONS

No.	Date	Description
	06.23.25	Issued for Permit

Gardner Spencer Smith Tench & Jarbeau
A Professional Corporation for the Practice of Architecture

Tower Place Building,
3340 Peachtree Road, N.E.
Suite 1800
Atlanta, Georgia 30326
404.522.8805
404.521.2118 (f)

GEORGIA REGISTERED No. SE000762 STRUCTURAL Engineer LEWIS M. HINES
06/23/2025

GOODMAN GIANNAVOLA HINES ENGINEERS
311 14th STREET
SUITE 2
ATLANTA, GA 30318
GGHEngineers.com
GA FIRM # PEF007706 EXP 06/2026
GGHE PROJ. #24105

PROJECT NO.
24105

SHEET TITLE
Plans

SHEET NO.
S1.10

MARK	SIZE W x L x D	BOTTOM REINF (EW, UNO)	TOP REINF (EW, UNO)	NOTES
FA	8'-6"x18'-5"x1'-10"	9 #6 LONG #6 @10" SHORT	9 #6 LONG #6 @10" SHORT	HOOK LONG BARS E.E.
F3.0	3'-0"x3'-0"x1'-0"	4 #4		
F4.0	4'-0"x4'-0"x1'-3"	5 #5		
F4.5	4'-6"x4'-6"x1'-3"	5 #5		
F5.0	5'-0"x5'-0"x1'-3"	5 #6		
F8.0	8'-0"x8'-0"x1'-8"	8 #6	8 #6	

1 S2.10 FOOTING SCHEDULE
NOT TO SCALE

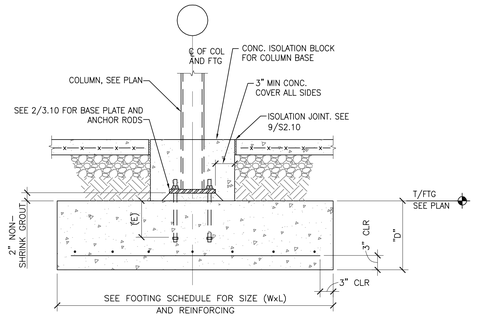

NOTES:
1. SEE 1/S-301 FOR COLUMN SCHEDULE.
2. SEE 1/S2.10 FOR FOOTING SCHEDULE.

2 S2.10 INTERIOR COLUMN DETAIL

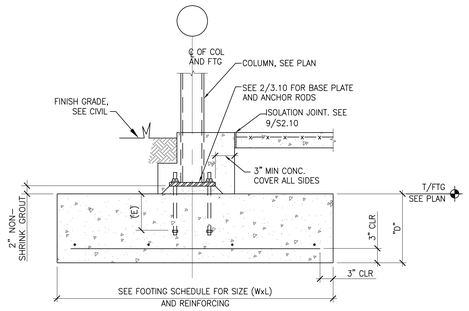

NOTES:
1. SEE 1/S-301 FOR COLUMN SCHEDULE.
2. SEE 1/S2.10 FOR FOOTING SCHEDULE.

3 S2.10 EXTERIOR COLUMN DETAIL
NOT TO SCALE

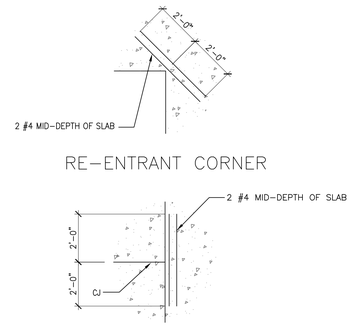

4 S2.10 TYPICAL SLAB REINFORCING
NOT TO SCALE

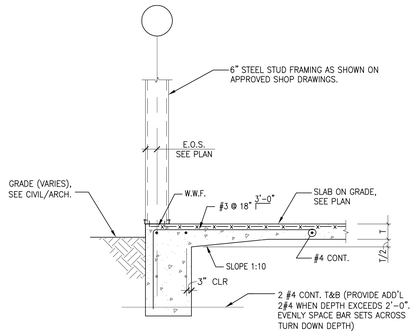

5 S2.10 TYPICAL SLAB EDGE DETAIL
SCALE: ¾"=1'-0"

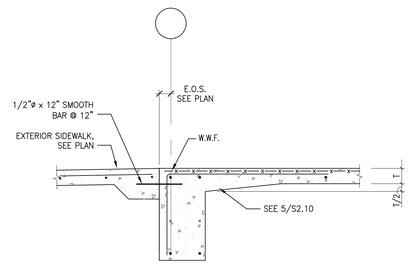

6 S2.10 SLAB EDGE AT DOORS
SCALE: ¾"=1'-0"

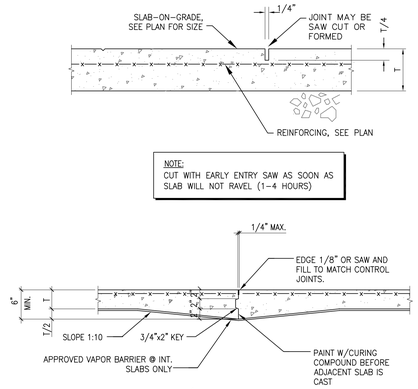

7 S2.10 SLAB CONTROL/CONSTRUCTION JOINT
SCALE: ¾"=1'-0"

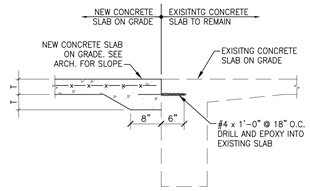

8 S2.10 NEW SLAB TO EXIST.
SCALE: ¾"=1'-0"

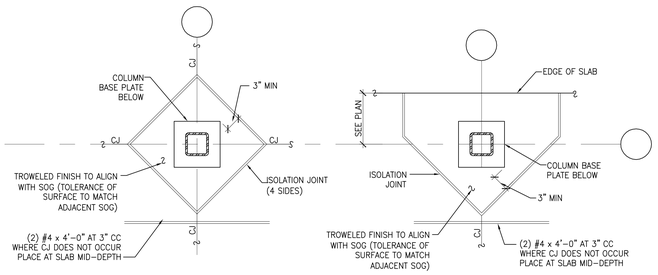

NOTE:
EXTEND COLUMN ISOLATION BLOCK AS NEEDED AT BRACED FRAMES TO ACCOMODATE THE DIAGONAL BRACE AND CONNECTION.

9 S2.10 SLAB ISOLATION JOINT AT COLUMN
SCALE: ¾"=1'-0"

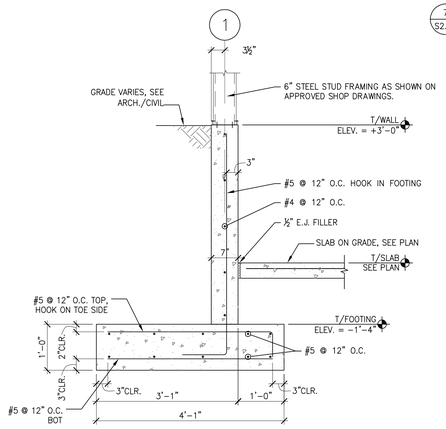

10 S2.10 FOUNDATION WALL
SCALE: ¾"=1'-0"

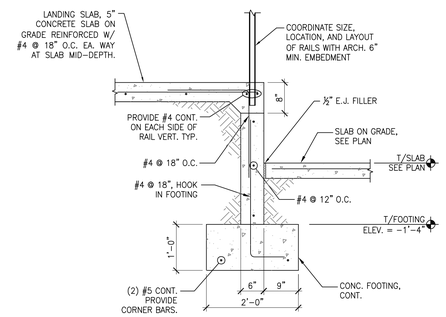

11 S2.10 FOUNDATION WALL
SCALE: ¾"=1'-0"

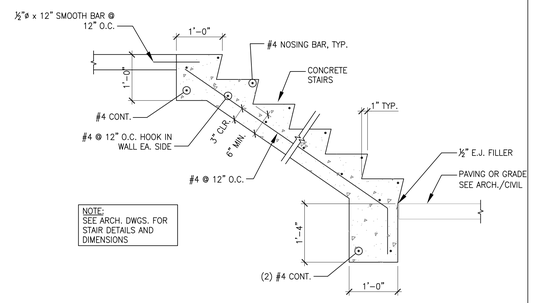

12 S2.10 STAIR ON GRADE SECTION
SCALE: ¾"=1'-0"

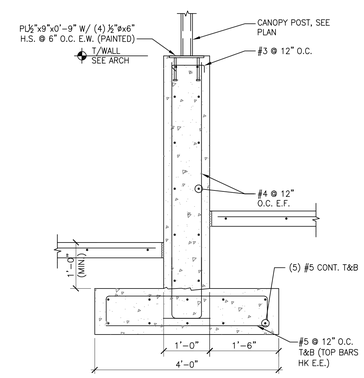

13 S2.10 FOUNDATION WALL
SCALE: ¾"=1'-0"

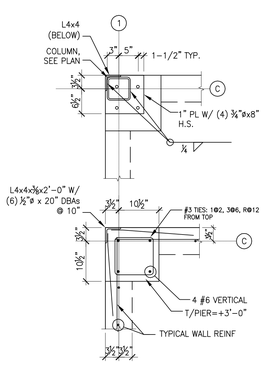

14 S2.10 COLUMN PILASTER
SCALE: ¾"=1'-0"

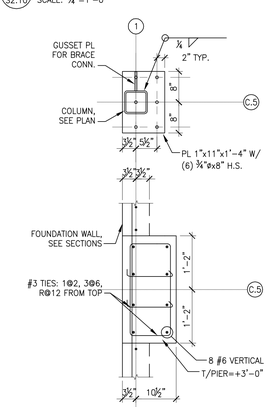

15 S2.10 COLUMN PILASTER
SCALE: ¾"=1'-0"

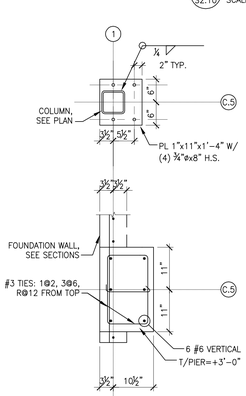

16 S2.10 COLUMN PILASTER
SCALE: ¾"=1'-0"

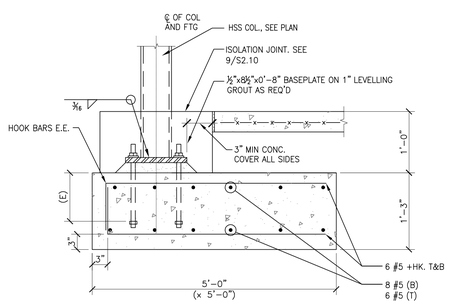

17 S2.10 FOUNDATION SECTION
SCALE: 1"=1'-0"

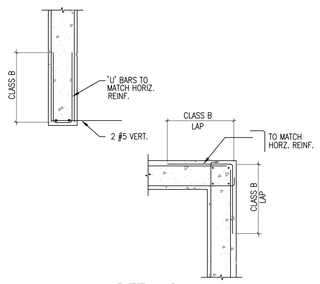

18 S2.10 WALL DETAILS
NOT TO SCALE

GEORGIA REGISTERED No. SE000762 STRUCTURAL ENGINEER JOHNS M. HINES
06/23/2025

GGHE PROJ. #24123

GOODMAN GIANNAVOLA HINES ENGINEERS
311 14th STREET
SUITE 2
ATLANTA, GA 30318
GGHEngineers.com
GA FIRM # PEF007706
EXP 06/2026

RIVERDALE LIBRARY ADDITION

420 VALLEY HILL RD.
RIVERDALE, GA 30274

© 2025 THESE DOCUMENTS REMAIN THE PROPERTY OF THE ARCHITECT AND MAY NOT BE USED OR REPRODUCED WITHOUT WRITTEN PERMISSION.

RELEASED FOR CONSTRUCTION

REVISIONS

No.	Date	Description
	06.23.25	Issued for Permit

Gardner Spencer Smith Tench & Jarbeau
A Professional Corporation for the Practice of Architecture

Tower Place Building,
3340 Peachtree Road, N.E.
Suite 1800
Atlanta, Georgia 30326
404.522.8805
404.521.2118 (f)

PROJECT NO.
24105

SHEET TITLE
Foundation Sections & Details

SHEET NO.
S2.10

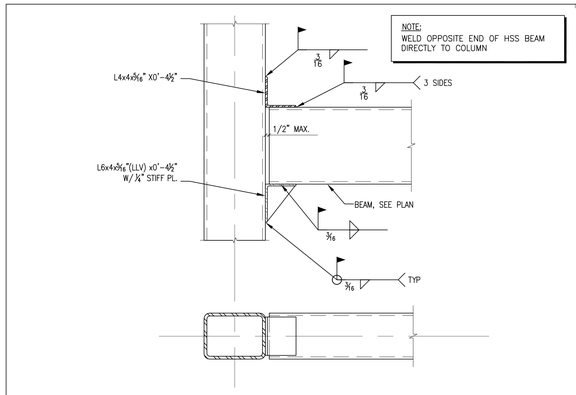

1 S3.10 HSS TO HSS CONNECTION
SCALE: ¾"=1'-0"

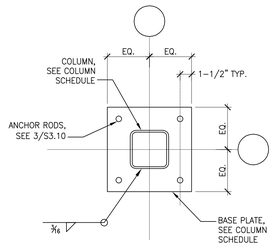

2 S3.10 HSS COLUMN BASEPLATE
SCALE: 1½"=1'-0"

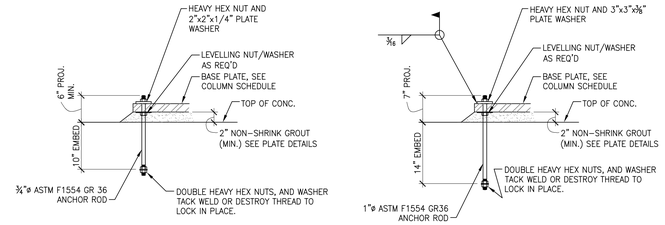

3 S3.10 ANCHOR ROD DETAILS
NOT TO SCALE

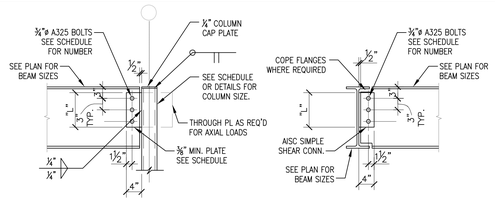

MINIMUM BOLT & PLATE SCHEDULE		
BEAM DEPTH	NO. OF BOLT ROWS	CONN. LENGTH "L"
C8, W10	2	5 1/2"
W12, W14	3	8 1/2"
W16	4	11 1/2"
W18	5	14 1/2"

NOTES:
1. BOLT QUANTITIES ARE MINIMUMS ONLY. CONNECTIONS SHALL BE SIZED FOR THE REACTIONS GIVEN. BOLT GRADE, SIZE, SPACING, PLATE CAN VARY.
2. USE AISC STANDARD SIMPLE SHEAR CONNECTIONS SIZED FOR THE REACTIONS GIVEN.

4 S3.10 TYPICAL STEEL CONNECTION
SCALE: ¾"=1'-0"

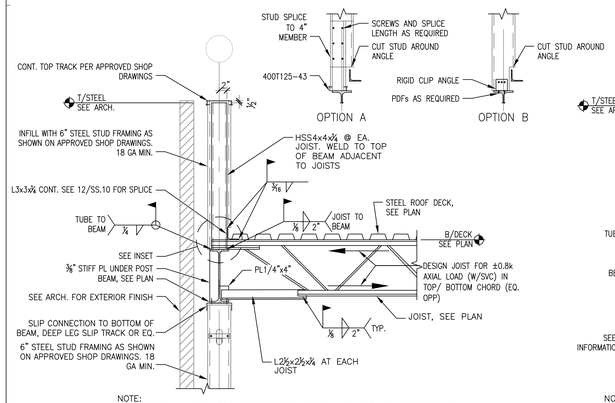

5 S3.10 ROOF FRAMING DETAIL
SCALE: ¾"=1'-0"

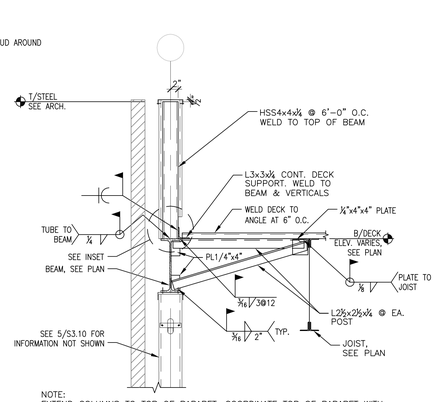

6 S3.10 ROOF FRAMING DETAIL
SCALE: ¾"=1'-0"

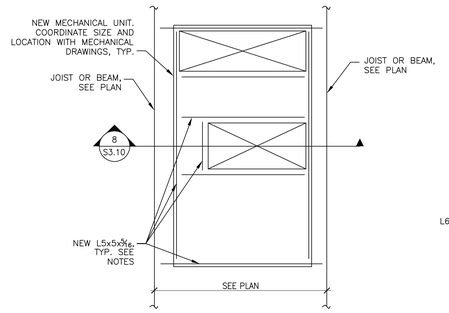

NOTES:
1. PROVIDE SUPPORT FRAMING AROUND ROOF OPENINGS AND AT PERIMETER OF ROOF TOP MECHANICAL UNITS UNDER MECH. UNIT CURBS.
2. MECHANICAL UNIT CURBS TO BE BOLTED TO SUPPORT ANGLES BELOW ROOF DECK PER REQUIREMENTS ON MECHANICAL DETAILS.
3. COORDINATE THE LOCATION, DIMENSIONS AND BOLT HOLE REQUIREMENTS FOR MECHANICAL UNITS, MECHANICAL UNIT CURBS AND ROOF OPENINGS WITH MECHANICAL DRAWINGS.

7 S3.10 TYP. ROOF OPENING AND MECH. UNIT SUPPORT FRAMING
N.T.S.

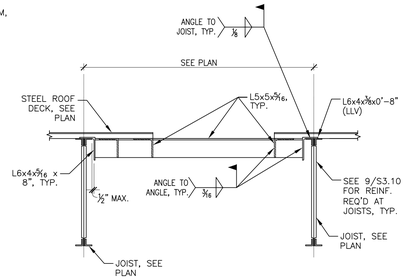

8 S3.10 TYPICAL ROOF OPENING AND MECH. UNIT SUPPORT FRAMING
N.T.S.

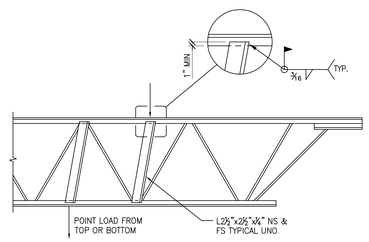

9 S3.10 JOIST REINFORCEMENT DETAIL
N.T.S.

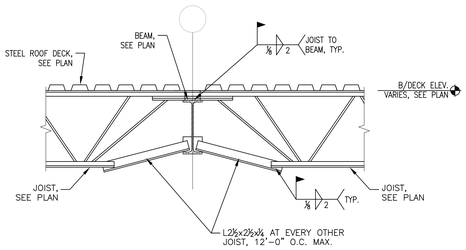

10 S3.10 GIRDER BRACING DETAIL
SCALE: ¾"=1'-0"

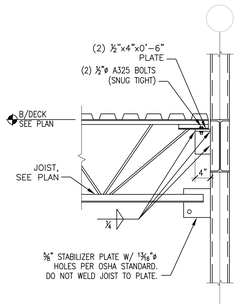

11 S3.10 JOIST TO COLUMN
SCALE: ¾"=1'-0"

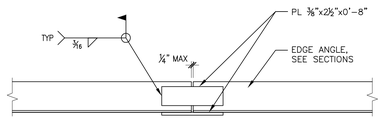

NOTE:
SPLICE ANGLE BETWEEN JOIST SEATS ONLY. CJP WELDS FOR BOTTOM LEG (w/ BACKING BAR) AT CONTRACTOR'S OPTION

12 S3.10 PERIMETER ANGLE SPLICE
SCALE: 1½"=1'-0"

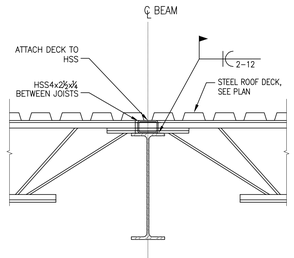

13 S3.10 HSS ON BEAM DETAIL
SCALE: 1"=1'-0"

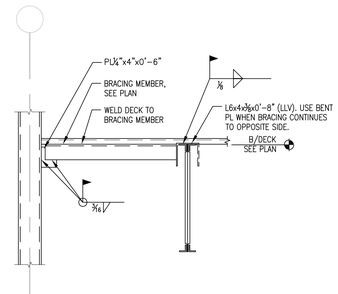

14 S3.10 COLUMN BRACING DETAIL
SCALE: ¾"=1'-0"

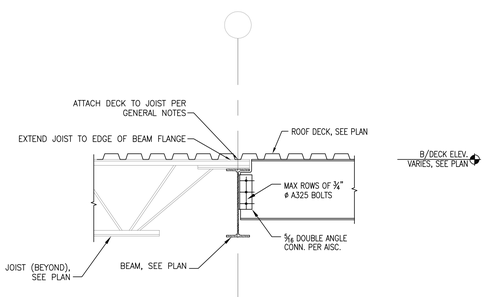

15 S3.10 TYP SECTION AT BEAM/JOIST
SCALE: ¾"=1'-0"

GEORGIA REGISTERED No. SE000762 STRUCTURAL Engineer CHRIS M. HINES
06/23/2025

GG HE
GOODMAN GIANNAVOLA HINES ENGINEERS
311 14th STREET
SUITE 2
ATLANTA, GA 30318
GGHEngineers.com
GA FIRM # PEF007706
EXP 06/2026
GGHE PROJ. #24123

RIVERDALE LIBRARY ADDITION

420 VALLEY HILL RD.
RIVERDALE, GA 30274

© 2025 THESE DOCUMENTS REMAIN THE PROPERTY OF THE ARCHITECT AND MAY NOT BE USED OR REPRODUCED WITHOUT OUT WRITTEN PERMISSION.

RELEASED FOR CONSTRUCTION

REVISIONS

No.	Date	Description
	06.23.25	Issued for Permit

Gardner Spencer Smith Tench & Jarbeau
A Professional Corporation for the Practice of Architecture

Tower Place Building,
3340 Peachtree Road, N.E.
Suite 1800
Atlanta, Georgia 30326
404.522.8805
404.521.2118 (f)

PROJECT NO.
24105

SHEET TITLE
Sections & Details

SHEET NO.
S3.10

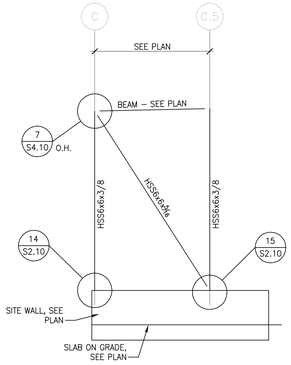

1 S4.10 FRAME ELEVATION 1
SCALE: 3/16"=1'-0"

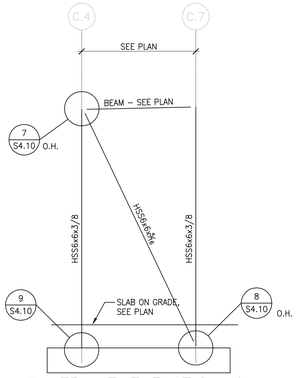

2 S4.10 FRAME ELEVATION 9
SCALE: 3/16"=1'-0"

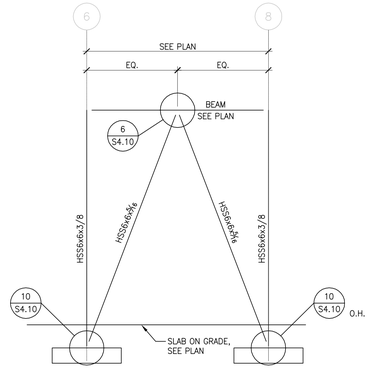

3 S4.10 FRAME ELEVATION A
SCALE: 3/16"=1'-0"

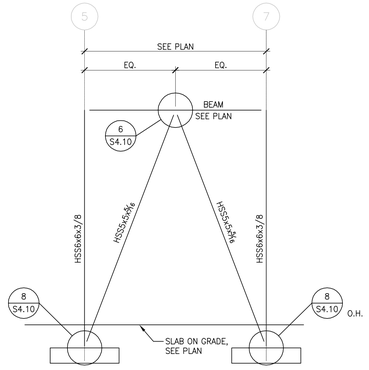

4 S4.10 FRAME ELEVATION C
SCALE: 3/16"=1'-0"

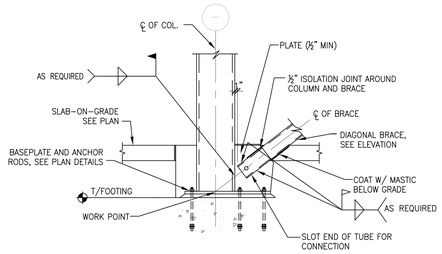

5 S4.10 SECTION
SCALE: 3/4"=1'-0"

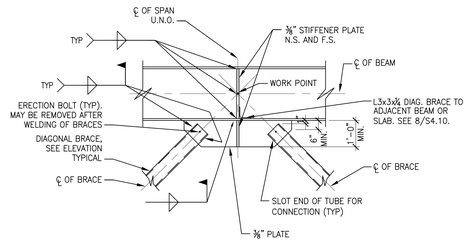

6 S4.10 SECTION
SCALE: 3/4"=1'-0"

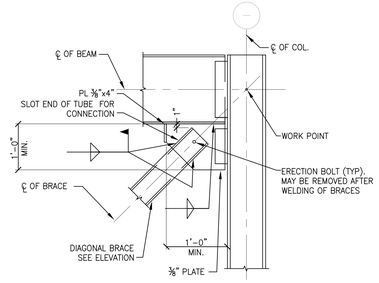

7 S4.10 SECTION
SCALE: 3/4"=1'-0"

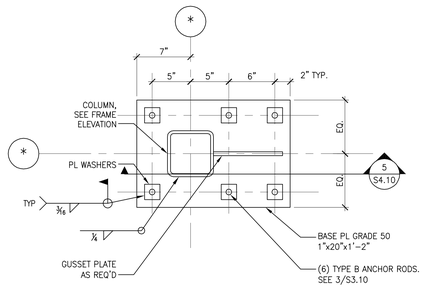

8 S4.10 BRACED FRAME BASEPLATE
SCALE: 1½"=1'-0"

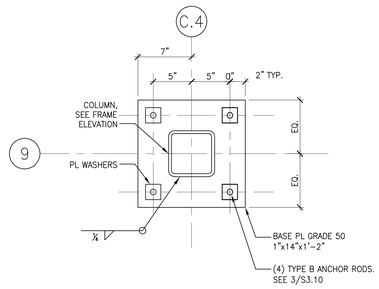

9 S4.10 BRACED FRAME BASEPLATE
SCALE: 1½"=1'-0"

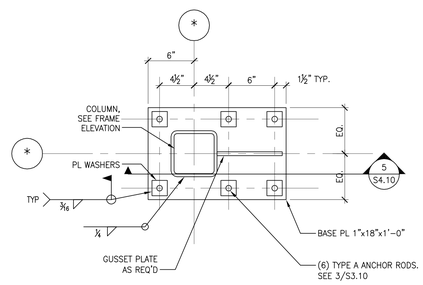

10 S4.10 BRACED FRAME BASEPLATE
SCALE: 1½"=1'-0"

RIVERDALE LIBRARY ADDITION

420 VALLEY HILL RD.
RIVERDALE, GA 30274

© 2023 THESE DOCUMENTS REMAIN THE PROPERTY OF THE ARCHITECT AND MAY NOT BE USED OR REPRODUCED WITHOUT WRITTEN PERMISSION.

RELEASED FOR CONSTRUCTION

REVISIONS

No.	Date	Description
	06.23.25	Issued for Permit

Gardner Spencer Smith Tench & Jarbeau
A Professional Corporation for the Practice of Architecture

Tower Place Building,
3340 Peachtree Road, N.E.
Suite 1800
Atlanta, Georgia 30326
404.522.8805
404.521.2118 (f)

PROJECT NO.
24105

SHEET TITLE
Frame Elevations and Details

SHEET NO.
S4.10

GEORGIA REGISTERED No. SE000762 STRUCTURAL ENGINEER GENIS M. HINES
06/23/2025

GG HE
GOODMAN GIANNAVOLA HINES ENGINEERS
311 14th STREET
SUITE 2
ATLANTA, GA 30318
GGHEngineers.com
GA FIRM # PEF007706
EXP 06/2026
GGHE PROJ. #24103

HVAC LEGEND & ABBREVIATIONS

SYMBOL	DESCRIPTION
00x00	RECTANGULAR AIR DUCT - FIRST DIMENSION IS SIDE SHOWN
	ROUND DUCT (A"Ø) OR FLAT OVAL (AxB)
	LINED DUCTWORK, DIMENSIONS ARE OUTER METAL TO OUTER METAL
	AIR DUCT FLEXIBLE CONNECTOR
	DUCTWORK TO BE REMOVED
OR	SUPPLY OR OUTSIDE AIR RECTANGULAR DUCT RISE OR DROP
OR	RETURN AIR RECTANGULAR DUCT RISE OR DROP
OR	EXHAUST AIR RECTANGULAR DUCT RISE OR DROP
	FIRE DAMPER (FD)
	SMOKE DAMPER (SD)
	COMBINATION FIRE/SMOKE DAMPER (FSD)
	MOTOR OPERATED DAMPER (SAME SIZE AS DUCT UNLESS OTHERWISE NOTED) (MOD)
	DUCT-MOUNTED STATIC PRESSURE SENSOR (DM-SPS)
	MANUAL VOLUME DAMPER (MD)
	SMOKE DETECTOR (SDT)
	BACKDRAFT DAMPER (BDD)
	AIR FLOW SENSOR (AFS)
	SQUARE ELBOW WITH TURNING VANES
	DUCT TRANSITION, RECTANGULAR TO ROUND OR OVAL
	DUCT TRANSITION, RECTANGULAR TO RECTANGULAR
	FLEX DUCT AT DIFFUSER
OR	ECCENTRIC REDUCER FLAT SIDE ON BOTTOM OR FLAT SIDE ON TOP
	CONCENTRIC REDUCER
	PIPE UNION
	PIPE RISE [DOUBLE LINE/SINGLE LINE]
	PIPE DROP [DOUBLE LINE/SINGLE LINE]
	CAP ON END OF LINE
	GATE VALVE
	BUTTERFLY VALVE
	BALANCING VALVE
	CHECK VALVE
	SOLENOID VALVE
	GLOBE VALVE
	THREE WAY MODULATING MOTORIZED CONTROL VALVE
	TWO WAY MODULATING MOTORIZED CONTROL VALVE
	BALL VALVE
	PRESSURE REDUCING VALVE
	RELIEF VALVE
	STRAINER
	SIGHT GLASS
	AUTOMATIC AIR VENT
	MANUAL AIR VENT
	TEST PLUG
	GAUGE COCK
	THERMOMETER
	PRESSURE GAUGE
	DRIP LEG
	THERMOMETER WELL

HVAC LEGEND & ABBREVIATIONS

SYMBOL	DESCRIPTION
	PIPING OR EQUIPMENT TO BE REMOVED
	PIPE FLOW ARROW
UP OR DN	GRADE ARROW-INDICATES RISE OR DROP IN DUCT OR PIPE
CHWR	CHILLED WATER RETURN
CHWS	CHILLED WATER SUPPLY
CWR	CONDENSER WATER RETURN
CWS	CONDENSER WATER SUPPLY
HWR	HOT WATER RETURN
HWS	HOT WATER SUPPLY
C	CONDENSATE DRAIN
LPS (5#)	LOW PRESSURE STEAM (PRESSURE SHOWN)
MPS (65#)	MEDIUM PRESSURE STEAM (PRESSURE SHOWN)
HPS (125#)	HIGH PRESSURE STEAM (PRESSURE SHOWN)
LPC	LOW PRESSURE STEAM CONDENSATE
MPC	MEDIUM PRESSURE STEAM CONDENSATE
HPC	HIGH PRESSURE STEAM CONDENSATE
P	PUMPED STEAM CONDENSATE
V	VENT
RL	REFRIGERANT LIQUID
RS	REFRIGERANT SUCTION
	STEAM TRAP
H	HUMIDITY SENSOR
T	THERMOSTAT
T	TEMPERATURE SENSOR
C	CARBON DIOXIDE SENSOR
S	SWITCH
TM	TIMER
	EXTENT OF DEMO
	CONNECT TO EXISTING

ABBREVIATIONS

AFF	ABOVE FINISHED FLOOR	HP	HORSEPOWER
BD	BALANCING DAMPER	HT	HEIGHT
CAP	CAPACITY	IH	INFRARED HEATER
CD	CEILING DIFFUSER	KW	KILOWATT
CENT	CENTRIFUGAL	L	LENGTH
CFH	CUBIC FEET PER HOUR	MAX	MAXIMUM
CFM	CUBIC FEET PER MINUTE	MBH	THOUSAND BTUH
COND	CONDENSING	MIN	MINIMUM
COP	COEFFICIENT OF PERFORMANCE	MOD	MOTOR OPERATED DAMPER
CU	CONDENSING UNIT	OA	OUTSIDE AIR
D	DRAIN	RA	RETURN AIR
DB	DRY BULB	RAR	RETURN AIR REGISTER
EAT	ENTERING AIR TEMPERATURE	RTU	ROOFTOP UNIT
EER	ENERGY EFFICIENCY RATIO	SA	SUPPLY AIR
EFF	EFFICIENCY	SAR	SUPPLY AIR REGISTER
ESP	EXTERNAL STATIC PRESSURE	SC	SENSIBLE CAPACITY
EXH	EXHAUST	SEER	SEASONAL ENERGY EFFICIENCY RATIO
F	FAHRENHEIT	SP	STATIC PRESSURE
F	FAN	SYS	SYSTEM
FCU	FAN COIL UNIT	T	THERMOSTAT
FD	FIRE DAMPER	TC	TOTAL CAPACITY
FT	FEET	TEMP	TEMPERATURE
G	GAS	TYP	TYPICAL
GFU	GAS FIRED UNIT	UH	UNIT HEATER
H	HOOD	V	VOLTS
HC	HEATING CAPACITY	W	WIDTH
HP	HEAT PUMP	WB	WET BULB
		WC	WATER COLUMN

DESIGN CONDITIONS

LOCATION: RIVERDALE, GEORGIA **CLIMATE ZONE:** 3A

OUTDOOR DESIGN CONDITIONS:
21.7°F WINTER DESIGN DRY BULB (ASHRAE 99.6%)
93.7°F DRY BULB AND 73.8°F MEAN COINCIDENT WET BULB SUMMER DESIGN (ASHRAE 0.4%)

INDOOR DESIGN CONDITIONS:
70°F DRY BULB INDOOR DESIGN (HEATING)
75°F DRY BULB AND 50% RH INDOOR DESIGN (COOLING)

CALCULATIONS BASED ON ASHRAE DESIGN CRITERIA AND CALCULATION METHODOLOGY.

CODE COMPLIANCE

MECHANICAL CODE	INTERNATIONAL MECHANICAL CODE, 2018 EDITION, WITH GEORGIA STATE AMENDMENTS (2020, 2024)
PLUMBING CODE	INTERNATIONAL MECHANICAL CODE, 2018 EDITION, WITH GEORGIA STATE AMENDMENTS (2020, 2022, 2023, 2024)
ELECTRICAL CODE	NFPA 70-2020, NATIONAL ELECTRICAL CODE
FIRE CODE	INTERNATIONAL FIRE CODE, 2018 EDITION, WITH GEORGIA AMENDMENTS
ENERGY CODE	INTERNATIONAL ENERGY CONSERVATION CODE, 2015 EDITION, WITH GEORGIA STATE AMENDMENTS (2020, 2022, 2023)

SHEET LIST - MECHANICAL

NUMBER	NAME
M0.01	MECHANICAL GENERAL NOTES AND LEGEND
M0.02	MECHANICAL SCHEDULES, CONTROLS & SPECIFICATIONS
M1.10	MECHANICAL FLOOR PLAN
M1.20	MECHANICAL ROOF PLAN
M5.00	MECHANICAL DETAILS

GENERAL NOTES - MECHANICAL

1. DRAWINGS ARE DIAGRAMMATIC AND NOT ALL APPURTENANCES ARE SHOWN. ALLOW FOR ADDITIONAL PIPE/DUCT OFFSETS, AS REQUIRED. PROVIDE ALL MATERIALS AND LABOR TO PROVIDE A COMPLETE AND OPERABLE SYSTEM IN ACCORDANCE WITH THE CONTRACT DRAWINGS, SPECIFICATIONS, AND AUTHORITY HAVING JURISDICTION.
2. COORDINATE INSTALLATION OF WORK WITH ALL OTHER TRADES.
3. COORDINATE SIZE AND LOCATIONS OF ALL FLOOR, WALL, AND ROOF OPENINGS REQUIRED TO INSTALL THE WORK WITH ALL OTHER TRADES.
4. COORDINATE DUCTWORK AND PIPING LAYOUT WITH OPENINGS IN STRUCTURAL BEAMS, WALLS, ELEMENTS, ETC.
5. COORDINATE REQUIREMENTS FOR PROVISION OF MOTOR STARTERS, DISCONNECTS, CONTACTORS, CONTROL WIRING, ETC. AS REQUIRED FOR A PROPER FUNCTIONING SYSTEM WITH THE ELECTRICAL AND CONTROLS CONTRACTORS.
6. MAINTAIN A SET OF COORDINATION DRAWINGS AT THE JOB SITE THAT ACCOUNTS FOR ALL TRADES. REVIEW THE COORDINATION DRAWINGS, COORDINATE WITH ALL TRADES, AND RESOLVE ANY POTENTIAL CONFLICTS PRIOR TO INSTALLING ANY PORTION OF WORK.
7. SUBMIT WRITTEN REQUEST FOR INFORMATION WHERE CONSTRUCTABILITY ISSUES ARE ENCOUNTERED IN THE FIELD. PROVIDE A FULL DESCRIPTION OF THE ISSUE AND RECOMMENDED SOLUTIONS. INCLUDE SKETCHES FOR EACH OPTION ALONG WITH ANY ASSOCIATED CHANGE ORDER COST ESTIMATES.
8. ANY DEVIATIONS FROM THE DRAWINGS MUST BE APPROVED IN WRITING BY THE ENGINEER OF RECORD. ANY CHANGES OR MODIFICATIONS MADE WITHOUT CONSENT MAY RESULT IN WORK BEING REMOVED AND INSTALLED ACCORDING TO THE PLANS.
9. SPECIFICATIONS AND DRAWINGS ARE COMPLEMENTARY AND MUST BE USED IN COMBINATION TO OBTAIN COMPLETE CONSTRUCTION INFORMATION. SUBMIT WRITTEN REQUEST FOR INFORMATION IF ANY DISCREPANCIES BETWEEN SPECIFICATION AND DRAWINGS ARE FOUND.
10. PROVIDE ONLY NEW MATERIALS AND EQUIPMENT FROM REPUTABLE MANUFACTURERS REGULARLY ENGAGED IN THE MANUFACTURE OF SUCH PRODUCTS. PERFORM ALL WORK IN A PROFESSIONAL MANNER BY WORKERS SKILLED IN THE TYPE OF WORK BEING PERFORMED.
11. KEEP THE WORK SITE AND SURROUNDING AREA FREE FROM ACCUMULATION OF WASTE MATERIALS GENERATED BY WORK PERFORMED UNDER THIS CONTRACT. REMOVE CONSTRUCTION DEBRIS FROM THE WORK SITE DAILY AND DISPOSE OF IT IN A LEGAL MANNER.
12. PROVIDE WARRANTY FOR ALL WORK (MATERIALS, LABOR, AND EQUIPMENT) FOR A PERIOD OF ONE YEAR COMMENCING WITH THE DATE OF ACCEPTANCE OF ALL WORK BY THE OWNER UNLESS OTHERWISE NOTED IN THE SPECIFICATIONS.
13. OBTAIN ALL LICENSES AND PERMITS REQUIRED BY STATE AND LOCAL JURISDICTIONAL AUTHORITIES FOR PERFORMANCE OF WORK.
14. MAINTAIN A RED LINE SET OF RECORD DRAWINGS AT THE JOB SITE THAT REFLECT ACTUAL EXECUTION OF THE WORK INCLUDING UPDATED EQUIPMENT SCHEDULES, DETAILS, CONTROLS DIAGRAMS AND SEQUENCES AND LOCATIONS OF EQUIPMENT, PIPING, AND DUCTWORK. PROVIDE THESE DRAWINGS IN CAD AND PDF FORMAT TO THE OWNER (AS-BUILTDRAWINGS).
15. COMMISSION HVAC SYSTEMS PER IECC REQUIREMENTS.
16. HEATING AND COOLING EQUIPMENT IS SIZED BASED ON LOADS CALCULATED BY CARRIER'S HOURLY ANALYSIS PROGRAM (HAP).

MECHANICAL INSTALLATION NOTES
1. DO NOT BLOCK ANY DOORS OR WINDOWS.
2. COMPLETE ALL TESTS BEFORE ANY INSULATION IS APPLIED.
3. DUCT INSULATION SHALL HAVE MINIMUM R-VALUE PER IECC REQUIREMENTS. SUPPLY AND RETURN DUCT IN UNCONDITIONED SPACES SHALL BE MINIMUM R-6; EXTERIOR EXPOSED DUCT SHALL HAVE MINIMUM R-8 VALUE.
4. UNLESS OTHERWISE NOTED INSTALL ALL PIPING AND DUCTWORK OVERHEAD AT A MAXIMUM HEIGHT OF 2'-0" ABOVE INSTALLED CEILING.
5. DO NOT CLOSE IN WALLS OR CEILINGS PRIOR TO INSPECTION BY ENGINEER OR OWNER'S REPRESENTATIVE. PROVIDE CLEAR UNOBSTRUCTED ACCESS TO WORK AND ANY LIFTS OR LADDERS NEEDED FOR INSPECTIONS. DURING INSPECTIONS PROVIDE PERSONNEL FAMILIAR WITH THE WORK AND TECHNICAL REQUIREMENTS OF THE WORK TO WALK THE ENGINEER/OWNER'S REPRESENTATIVE THROUGH THE WORK TO BE INSPECTED, DESCRIBE PROGRESS, AND ANSWER QUESTIONS. MAINTAIN A RECORD OF WORK INSPECTED AND COORDINATE WITH ENGINEER/OWNER'S REPRESENTATIVE ON PROGRESS OF INSPECTION TILL COMPLETION. SCHEDULE INSPECTIONS WITH ENGINEER/OWNER'S REPRESENTATIVE A MINIMUM OF 2 WEEKS PRIOR.
6. LOCATE PRESSURE, TEMPERATURE, AND FLOW MEASURING DEVICES IN ACCESSIBLE LOCATIONS WITH STRAIGHT SECTIONS OF DUCT/PIPE UPSTREAM/DOWNSTREAM IN ACCORDANCE WITH MANUFACTURER'S RECOMMENDATIONS.
7. THE PRODUCT OF A SINGLE MANUFACTURER SHALL BE USED FOR EACH ITEM OF THE SAME EQUIPMENT TYPE.
8. INSTALL ALL CONTROL WIRE IN CONDUIT. CONTROL WIRE AND CONDUIT SHALL COMPLY WITH THE NATIONAL ELECTRIC CODE AND THE ELECTRICAL SPECIFICATIONS.
9. PROVIDE ACCESS PANELS/DOORS IN CEILINGS, WALLS, FLOORS, AND DUCTWORK FOR ALL ITEMS REQUIRING ADJUSTMENT, TESTING, OR INSPECTION INCLUDING SMOKE DETECTORS, FIRE DAMPERS, SMOKE DAMPERS, VOLUME DAMPERS, ACTUATORS, FANS, HUMIDIFIERS, COILS, ETC. ATTACH DUCTWORK, PIPING, EQUIPMENT, ETC. SUPPORTS TO STEEL BAR JOISTS, TRUSSES, OR JOIST GIRDERS AT PANEL POINTS. PROVIDE BEAM CLAMPS MEETING MSS STANDARDS. DO NOT SUPPORT WORK FROM METAL DECKS.
10. PROVIDE UL LISTED PENETRATION ASSEMBLIES WHERE DUCTS, PIPES, ETC. PENETRATE FIRE/SMOKE RATED PARTITIONS THAT MAINTAIN THE FIRE/SMOKE RESISTANCE RATING.
11. PROVIDE SLEEVES AT ALL FLOOR, WALL, AND ROOF PENETRATIONS.
12. ALL PRODUCTS LOCATED IN PLENUM AREAS SHALL HAVE A MAXIMUM FLAME SPREAD INDEX OF 25 AND A MAXIMUM SMOKE DEVELOPED INDEX OF 50 WHEN TESTED IN ACCORDANCE WITH ASTM E 84 OR ANSI/UL 723.
13. SEAL ALL PENETRATIONS OF SLAB-TO-SLAB PARTITIONS AND SHAFTS AIRTIGHT TO PRESERVE RETURN AIR PATHWAYS.
14. ALL PIPE SIZES SHOWN ARE NOMINAL SIZES.
15. LOCATE HVAC AIR INTAKE A MINIMUM OF 10 FEET FROM PLUMBING VENTS, EXHAUST OUTLETS, GAS-FIRED EQUIPMENT VENTS, ETC.

MECHANICAL EQUIPMENT INSTALLATION NOTES
1. INSTALL ALL EQUIPMENT IN ACCORDANCE WITH MANUFACTURERS' INSTRUCTIONS AND PER CONTRACT DRAWINGS AND SPECIFICATIONS. IF MANUFACTURERS' INSTRUCTIONS ARE IN DIRECT CONFLICT WITH INSTRUCTIONS ON THE DRAWINGS OR IN THE SPECIFICATIONS CONTACT THE ENGINEER OF RECORD FOR CLARIFICATION.
2. COORDINATE WORK WITH OTHER TRADES TO PROVIDE ALL CLEARANCES FOR EQUIPMENT SERVICE AND MAINTENANCE INCLUDING ACCESS TO PANELS, CONTROLS, FILTERS, VALVING, ETC. VERIFY PHYSICAL DIMENSIONS OF EQUIPMENT TO ENSURE THAT ALL CLEARANCES CAN BE MET BEFORE PURCHASING EQUIPMENT.
3. COORDINATE EQUIPMENT CONNECTIONS WITH MANUFACTURER'S CERTIFIED DRAWINGS, PROVIDE ALL PIPE AND DUCT TRANSITIONS AS REQUIRED TO CONNECT TO EQUIPMENT.
4. PROVIDE VIBRATION ISOLATION FOR ALL EQUIPMENT TO PREVENT TRANSMISSION OF VIBRATION TO BUILDING STRUCTURE.
5. PROVIDE FLEXIBLE DUCT CONNECTIONS AT DUCT CONNECTIONS TO AIR HANDLING UNITS, FANS, AND OTHER EQUIPMENT REQUIRING VIBRATION ISOLATION.
6. PROVIDE EQUIPMENT DRAIN LINES TO NEAREST DRAIN. PIPE SIZE SHALL BE NO SMALLER THAN DRAIN CONNECTION SIZE. PROVIDE P-TRAP AT UNIT FOR AIR CONDITIONING UNIT CONDENSATE DRAINS AND ROUTE TO STORM DRAIN/ROOF DRAIN.
7. PROVIDE TERMINAL AIR CONDITIONING UNITS WITH MANUFACTURER'S INTEGRAL CONDENSATE PUMP UNLESS OTHERWISE NOTED.
8. PROVIDE EQUIPMENT WITH MANUFACTURER'S INTEGRAL DISCONNECT AND POWER RECEPTACLE UNLESS OTHERWISE NOTED.
9. REPLACE ALL AIR FILTERS PRIOR TO AIR BALANCING AND CLEAN OUT ALL PIPE STRAINERS PRIOR TO WATER BALANCING.
10. PROVIDE FULL SET OF AS-BUILT DRAWINGS AFTER PROJECT COMPLETION.
11. ALL EQUIPMENT SHALL HAVE ENGRAVED NAMEPLATE REFLECTING EQUIPMENT CAPACITIES EITHER PROVIDED BY MANUFACTURER OR CONTRACTOR. NAMEPLATE SHALL BE READILY VISIBLE AND UNOBSTRUCTED.
12. MAINTAIN 10'SEPARATION BETWEEN ROOF MOUNTED EQUIPMENT AND UNPROTECTED ROOF EDGES.

HVAC NOTES
1. DUCT PRESSURE CLASS: SUPPLY: +2", RETURN: -2", EXHAUST/RELIEF: -2"
2. DUCT SEAL CLASS: B
3. INCORPORATE DUCT MODIFICATIONS TO SUIT CEILING DEVICE LOCATIONS AS REFLECTED ON ARCHITECT'S COORDINATED REFLECTED CEILING DRAWING.
4. RISES AND DROPS IN DUCTWORK, ACCESS DOORS, VOLUME DAMPERS, ETC. ARE INDICATED ON DRAWINGS FOR CLARITY FOR SPECIFIC LOCATION REQUIREMENTS AND DO NOT INDICATE THE EXTENT OF THE REQUIREMENTS FOR THESE ITEMS.
5. RISES AND DROPS IN DUCTWORK, ACCESS DOORS, VOLUME DAMPERS, ETC. ARE INDICATED ON DRAWINGS FOR CLARITY FOR SPECIFIC LOCATION REQUIREMENTS AND DO NOT INDICATE THE EXTENT OF THE REQUIREMENTS FOR THESE ITEMS.
6. PROVIDE INTERACTIVE WALL MOUNTED DEVICES WITH CENTERLINE 48 INCHES ABOVE FINISHED FLOOR UNLESS OTHERWISE NOTED.
7. DUCT DIMENSIONS ON DRAWINGS ARE INTERNAL CLEAR DIMENSIONS, INCREASE DUCT SIZE TO COMPENSATE FOR DUCT LINING THICKNESS.
8. PROVIDE DOUBLE RADIUS TURNING VANES ON ALL 90-DEGREE SQUARE ELBOWS EXCEPT WHERE PROHIBITED BY CODE OR OTHERWISE INDICATED. PROVIDE DUCT ACCESS DOOR UPSTREAM OF ALL ELBOWS WITH TURNING VANES. PROVIDE UN-VANED ROUND ELBOWS (1-1/2 DUCT WIDTH RADIUS) ON KITCHEN EXHAUST.
9. RISES AND DROPS IN DUCTWORK, ACCESS DOORS, VOLUME DAMPERS, ETC. ARE INDICATED ON DRAWINGS FOR CLARITY FOR SPECIFIC LOCATION REQUIREMENTS AND DO NOT INDICATE THE EXTENT OF THE REQUIREMENTS FOR THESE ITEMS.
10. PROVIDE INTERACTIVE WALL MOUNTED DEVICES WITH CENTERLINE 48 INCHES ABOVE FINISHED FLOOR UNLESS OTHERWISE NOTED.
11. PROVIDE DOUBLE RADIUS TURNING VANES ON ALL 90-DEGREE SQUARE ELBOWS EXCEPT WHERE PROHIBITED BY CODE OR OTHERWISE INDICATED. PROVIDE DUCT ACCESS DOOR UPSTREAM OF ALL ELBOWS WITH TURNING VANES.
12. FLEXIBLE DUCTWORK SHALL NOT EXCEED 5 FEET IN LENGTH. INSTALL FLEXIBLE DUCTWORK SO AS TO MAINTAIN ITS ROUND CROSS-SECTIONAL SHAPE. DO NOT SUBJECT FLEXIBLE DUCTWORK TO MORE THAN 180 DEGREES OF BENDS, CUMULATIVE.
13. PROVIDE SHEET METAL FLASHING FOR EXPOSED DUCTWORK WALL AND CEILING PENETRATIONS
14. PROTECT ALL NEW AND EXISTING HVAC EQUIPMENT BEFORE AND AFTER INSTALLATION, INCLUDING DUCTWORK, VAV TERMINALS, ZONE DAMPERS AND DIFFUSERS, FROM DUST AND CONTAMINATION. IF THE HVAC SYSTEM USED DURING FIT-OUT CONSTRUCTION.
15. PRESCRIPTIVE MEASURES IN SMACNA (CHAPTER 3) SHALL BE FOLLOWED REGARDING SOURCE CONTROL, PATHWAY INTERRUPTION, HOUSEKEEPING AND CLEANUP. CONTRACTOR IS RESPONSIBLE FOR CLEANUP COST FOR EQUIPMENT AND DUCTWORK CONTAMINATED
16. WITH CONSTRUCTION DUST INCLUDING VACUUM CLEANING THE PLENUM SPACE ABOVE THE CEILING. FOLLOWING ARE PROCEDURES TO PROTECT THE DUCTWORK: SEAL ALL DUCT OPENINGS, BOTH SUPPLY AND RETURN, AND WRAP ALL EQUIPMENT WITH PLASTIC.
17. PLACE FILTER MEDIA (NO LESS THAN MERV 8 RATED FILTERS) AT ALL OPENINGS FOR RETURN AIR INCLUDING RETURN GRILLES IN THE CEILING OR NEGATIVE PRESSURE SIDE OF THE SYSTEM. REGULARLY REPLACE THE FILTER MEDIA, NO LESS THAN ONCE PER WEEK,
18. FOR THE DURATION OF CONSTRUCTION. INSTITUTE DAILY CLEANING ACTIVITIES, SUCH AS USING WETTING AGENTS TO MINIMIZE AIRBORNE DUSTS. VACUUM CLEAN WITH HEPA FILTERS FOR FINAL CLEANING.
19. MAINTAIN 10'-0" MINIMUM SEPARATION BETWEEN MECHANICAL EXHAUST OUTLETS AND OUTDOOR AIR INTAKES.

COM*check* Software Version COMcheckWeb

Mechanical Compliance Certificate

Project Information

Energy Code:	2015 IECC
Project Title:	241099 RIVERDALE LIBRARY EXPANSION
Location:	Riverdale (Clayton), Georgia
Climate Zone:	3a
Project Type:	Addition

Construction Site:
420 VALLEY HILL ROAD
RIVERDALE, Georgia 30274

Owner/Agent:
CLAYTON COUNTY
112 SMITH STREET
JONESBORO, Georgia 30236

Designer/Contractor:
KIMBERLY REESE, PE
HAMMOND & ASSOCIATES
6961 PEACHTREE INDUSTRIAL
BLVD, SUITE 208
NORCROSS, Georgia 30092
678-292-6937
KIMBERLYR@HAMMONDENGINEERS
.COM

Mechanical Systems List

Quantity System Type & Description

1 RTU-1 (Single Zone):
Heating: 1 each - Central Furnace, Electric, Capacity = 20 kBtu/h
No minimum efficiency requirement applies
Cooling: 1 each - Single Package DX Unit, Capacity = 69 kBtu/h, Air-Cooled Condenser, Air Economizer
Proposed Efficiency = 11.20 EER, Required Efficiency = 11.20 EER
Proposed Part Load Efficiency = 21.30 IEER, Required Part Load Efficiency = 12.80 IEER
Fan System: RTU-1 FAN SYS | 493 MEETING ROOM -- Compliance (Motor nameplate HP and fan efficiency method) : Passes

Fans:
SUPPLY Supply, Single-Zone VAV, 1440 CFM, 1.7 motor nameplate hp, 0.0 fan efficiency grade, 0.0 total fan efficiency, 0.0 design fan efficiency , fan exception: Single fan <= 5HP
RETURN Return, Single-Zone VAV, 1440 CFM, 0.5 motor nameplate hp, 0.0 fan efficiency grade, 0.0 total fan efficiency, 0.0 design fan efficiency , fan exception: Single fan <= 5HP

1 RTU-2 (Single Zone):
Heating: 1 each - Central Furnace, Electric, Capacity = 20 kBtu/h
No minimum efficiency requirement applies
Cooling: 1 each - Single Package DX Unit, Capacity = 67 kBtu/h, Air-Cooled Condenser, Air Economizer
Proposed Efficiency = 11.20 EER, Required Efficiency = 11.20 EER
Proposed Part Load Efficiency = 21.30 IEER, Required Part Load Efficiency = 12.80 IEER
Fan System: RTU-2 FAN SYS | REMAINING BLDG SPACES -- Compliance (Motor nameplate HP and fan efficiency method) : Passes

Fans:
SUPPLY Supply, Single-Zone VAV, 2200 CFM, 0.5 motor nameplate hp, 0.0 fan efficiency grade, 0.0 total fan efficiency, 0.0 design fan efficiency , fan exception: Single fan <= 5HP
EXHAUST Return, Single-Zone VAV, 2200 CFM, 1.7 motor nameplate hp, 0.0 fan efficiency grade, 0.0 total fan efficiency, 0.0 design fan efficiency , fan exception: Single fan <= 5HP

1 UH-1 (Unknown w/ PerimeterSystem):
Heating: 1 each - Unit Heater, Electric, Capacity = 10 kBtu/h
No minimum efficiency requirement applies
Fan System: FAN SYSTEM 3 -- Compliance (Motor nameplate HP and fan efficiency method) : Passes

Fans:
FAN 3 Supply, Constant Volume, 350 CFM, 0.1 motor nameplate hp, 0.0 fan efficiency grade, 0.0 total fan efficiency, 0.0 design fan efficiency , fan exception: Single fan <= 5HP

Mechanical Compliance Statement

Compliance Statement: The proposed mechanical design represented in this document is consistent with the building plans, specifications, and other calculations submitted with this permit application. The proposed mechanical systems have been designed to meet the 2015 IECC requirements in COM*check* Version COMcheckWeb and to comply with any applicable mandatory requirements listed in the Inspection Checklist.

Kimberly R. L. Reese, P.E. — Name - Title
Signature
5/5/2025 — Date

CLAYTON COUNTY LIBRARY SYSTEM

RIVERDALE LIBRARY ADDITION

420 Valley Hill Rd, Riverdale, GA 30274

HAMMOND ENGINEERING, INC
CONSULTING ENGINEERS
6961 PEACHTREE INDUSTRIAL BLVD, #208
NORCROSS, GEORGIA, 30092
TEL: (678)292-6937
NATHANIEL D. HAMMOND P.E.
MECHANICAL/ELECTRICAL ENGINEER
P.E. #047450

© 2025. THESE DOCUMENTS REMAIN THE PROPERTY OF THE ARCHITECT AND MAY NOT BE USED OR REPRODUCED WITHOUT WRITTEN PERMISSION.

RELEASED FOR CONSTRUCTION

Revisions

No.	Date	Description
	03/19/2025	50% SET
	03/28/2025	100% SET
	03/31/2025	100% SET
	06/10/2025	100% SET

GEORGIA REGISTERED PROFESSIONAL ENGINEER PE047450 NATHANIEL D. HAMMOND

06/10/2025

Gardner Spencer Smith Tench & Jarbeau
A Professional Corporation for the Practice of Architecture
www.gsstj.com

50 Hurt Plaza SW,
Suite 1100
Atlanta, Georgia
30303
404.522.8805
404.521.2118 (F)

PROJECT NO.
24105

SHEET TITLE
MECHANICAL GENERAL NOTES AND LEGEND

SHEET NO.
M0.01

ROOFTOP UNIT SCHEDULE

MARK	SERVES	SUPPLY AIRFLOW (CFM)	EXTERNAL STATIC PRESSURE (IN WG)	OUTSIDE AIR (CFM)	SUPPLY FAN		IEER / EER	DIRECT EXPANSION COOLING (DESIGN)				HOT GAS REHEAT (DESIGN)		HEAT PUMP HEATING (DESIGN)		SUPPLEMENTAL ELECTRIC HEAT				EXHAUST AIR FAN		MAX WEIGHT (LBS)	MCA / MOCP	VOLTAGE	REMARKS
					FAN MOTOR (BHP)	MAX FAN MOTOR (HP)		TOTAL CAPACITY (MBH)	SENSIBLE CAPACITY (MBH)	COIL EAT (°F)	COIL LAT (°F)	CAPACITY (MBH)	COIL LAT (°F)	CAPACITY (MBH)	UNIT LAT (°F)	CAPACITY (MBH)	SIZE / CONTROL	COIL EAT (°F)	COIL LAT (°F)	FAN MOTOR (BHP)	MAX FAN MOTOR (HP)				
RTU-1	493 MEETING ROOM	1,430	0.80	560	0.55	1	20.3 / 12.2	66.3	44.8	82.2 DB / 67.2 WB	52.1 DB / 51.1 WB	49.5	84.8 DB	35.7	84.6	41.96	12.3 KW / SCR	88.2 DB	115.4 DB	0.09	1	3200	79.5 / 90	208V / 3PH	ALL
RTU-2	REMAINING BLDG SPACES	1990	0.80	500	0.79	1	20.3 / 12.2	68.1	51.4	78.6 DB / 65.0 WB	53.2 DB / 53.2 WB	57.8	81.1 DB	35.9	77.6	41.96	12.3 KW / SCR	80.2 DB	99.7 DB	0.08	1	3200	79.5 / 90	208V / 3PH	ALL

REMARKS:
1. SUMMER DESIGN - BASED ON 93.7°F DB / 73.7° WB. WINTER DESIGN - BASED ON 21.7°F DB.
2. INDOOR DESIGN (COOLING) 75°F DRY BULB AND 50% RH. INDOOR DESIGN (HEATING) 70°F DRY BULB.
3. RATE UNIT COOLING BASED ON 95°F OUTDOOR AMBIENT AND UNIT HEATING BASED ON 0°F OUTDOOR AMBIENT.
4. PROVIDE UNIT COMPATIBLE WITH R-32 OR OTHER APPROVED A2L TYPE REFRIGERANT.
5. PROVIDE INTEGRAL A2L REFRIGERANT DETECTION AND MITIGATION SYSTEM.
6. PROVIDE ECONOMIZER WITH ENTHALPY OPERATION.
7. PROVIDE POWERED EXHAUST FOR OPERATION DURING ECONOMIZER MODE.
8. PROVIDE 12KW SUPPLEMENTAL ELECTRIC HEAT.
9. PROVIDE 2" MERV 8 AND 4" MERV 14 FILTERS.
10. PROVIDE SINGLE POINT POWER CONNECTION AND FACTORY FURNISHED, UNIT MOUNTED, DISCONNECT.
11. PROVIDE BACNET COMPLIANT DIGITAL CONTROLLER.
12. BASIS OF DESIGN: VALENT GKD. PROVIDE BASIS OF DESIGN MANUFACTURER OR APPROVED EQUAL. ACCEPTABLE MANUFACTURERS LIMITED TO VALENT/TRANE, CARRIER, AND DAIKIN.
13. PROVIDE 14" (MIN.) HIGH ROOF CURB.
14. PROVIDE MANUFACTURER RECOMMEND ACCESSORIES FOR SAFE AND PROPER OPERATION
15. REFER TO ELECTRICAL DRAWINGS FOR ADDITIONAL ELECTRICAL REQUIREMENTS.
16. HEAT PUMP CAPACITY IS RATED AT 0°F AMBIENT CONDITIONS.
17. ELECTRIC HEATING IS SCHEDULED WITH THE HEAT PUMP IN OPERATION.
18. PROVIDE LOW LEAKAGE OA AND RA DAMPERS.
19. PROVIDE FILTER SENSOR.

ELECTRIC UNIT HEATER

MARK	TYPE	TYPE	CAPACITY	VOLTAGE	DESIGN BASIS	REMARKS
UH-1	HORIZONTAL	ELECTRIC	3KW	208V / 1PH	QMARK MUH03	1,2,3

REMARKS:
1. PROVIDE UNIT MOUNTED DISCONNECT.
2. PROVIDE INTEGRAL UNIT MOUNTED THERMOSTAT.
3. REFER TO ELECTRICAL DRAWINGS FOR ADDITIONAL ELECTRICAL REQUIREMENTS.

RELIEF HOOD SCHEDULE

MARK	AREA SERVED	MINIMUM THROAT AREA (SF)	MAXIMUM AIRFLOW (CFM)	MAXIMUM AIR PRESSURE DROP (IN WG)	HEIGHT X LENGTH X WIDTH (IN X IN X IN)	MAXIMUM THROAT VELOCITY (FPM)	DESIGN BASIS	REMARKS
RH-1	493 MEETING ROOM	1.0	560	0.06	22 X 29 X 29	683	GREENHECK GRSR-12	1,2
RH-2	REMAINING BLDG SPACES	1.0	440	0.04	22 X 29 X 29	537	GREENHECK GRSR-12	1,2

REMARKS:
1. PROVIDE GRAVITY ROOF VENTILATOR TYPE HOOD.
2. MAXIMUM AIR PRESSURE DROP IS THROUGH THE HOOD AT THE SCHEDULED AIRFLOW.

AIR DEVICE SCHEDULE

MARK	DESCRIPTION	DIFFUSER SIZE	NECK SIZE	MOUNTING TYPE	DAMPER	FINISH	DESIGN BASIS
S-1	ALUMINUM SQUARE PLAQUE CEILING DIFFUSER, 4 WAY THROW, FULL FACE, WITH ROUND NECK, FACE PANEL, INSULATED BACK CONE	24x24	AS NOTED	LAY-IN CEILING	RUNOUT DAMPER	WHITE	TITUS OMNI
R-1	FULL FACE 1/2"x1/2"x1/2" ALUMINUM EGG CRATE GRILLE	24x24	AS NOTED	LAY-IN CEILING	NO	WHITE	TITUS 50F
E-1	FULL FACE 1/2"x1/2"x1/2" ALUMINUM EGG CRATE GRILLE, DUCT CONNECTION	24x24	AS NOTED	LAY-IN CEILING	RUNOUT DAMPER	WHITE	TITUS 50F

EXHAUST FAN SCHEDULE

MARK	TYPE	SPACE SERVED	AIRFLOW (CFM)	EXTERNAL STATIC PRESSURE (IN WG)	MAXIMUM BRAKE HP	MOTOR HP	RPM	VOLTAGE	DESIGN BASIS	REMARKS
EF-1	CENTRIFUGAL POWERED ROOF VENTILATOR	RESTROOMS	390	0.5	0.08	1/4	1300	120V / 1PH	GREENHECK G-098-VG	1,2,3

REMARKS:
1. PROVIDE DIRECT DRIVE TYPE FAN.
2. PROVIDE ROOF CURB, BACKDRAFT DAMPER, AND UNIT MOUNTED DISCONNECT.
3. REFER TO ELECTRICAL DRAWINGS FOR ADDITIONAL ELECTRICAL REQUIREMENTS.

AIR BALANCE SCHEDULE

MARK	SUPPLY AIR (CFM)	RETURN AIR (CFM)	OUTSIDE AIR (CFM)	EXHAUST AIR (CFM)	BALANCE = OA - EA (CFM)
RTU-1	1,440	880	560	-390	+170
RTU-2	2,200	1,760	440	--	+440

HVAC CONTROLS GENERAL NOTES

1. INDICATION OF EQUIPMENT OPERATING STATUS AND ACTUATION OF CONTROL SEQUENCES SHALL BE ACCOMPLISHED BY CURRENT SENSING RELAYS UNLESS OTHERWISE INDICATED IN THE I/O SUMMARIES.
2. UPON POWER FAILURE AND RESTORATION, SYSTEMS SHALL AUTOMATICALLY RESTART AND RETURN TO THEIR NORMAL MODE OF OPERATION. ADJUSTABLE TIME DELAYS SHALL BE PROVIDED TO SEQUENTIALLY STAGE STARTING OF EQUIPMENT WITH MOTORS GREATER THAN 5 HP OR ELECTRIC HEATING LOADS GREATER THAN 4 kW.
3. HAND-OFF-AUTOMATIC AND CONTROLLER-OFF-BYPASS SWITCHES:
   - A. SAFETY DEVICES, INCLUDING FIRE ALARM SYSTEM RELAYS AND EMERGENCY FAN SHUTDOWN STATIONS, SHALL BE WIRED IN SERIES WITH THE MOTOR CONTROLLER HOLDING COIL CIRCUIT AND SHALL BE ACTIVE IN THE HAND AND AUTOMATIC POSITIONS AND IN THE BYPASS POSITION.
   - B. INTERLOCKING WITH OTHER FANS, EQUIPMENT, OR SYSTEMS OTHER THAN THOSE REQUIRED OR THE OPERATION OF THE SPECIFIC EQUIPMENT SHALL BE THROUGH AUTOMATIC POSITIONS ONLY.
   - C. REMOTE CONTROL FROM THE BUILDING AUTOMATION SYSTEM SHALL BE THROUGH AUTOMATIC POSITIONS.
   - D. HAND POSITION SHALL BE FOR MAINTENANCE OPERATION ONLY.
   - E. OPERATION IN HAND POSITION SHALL ENERGIZE ASSOCIATED DAMPERS AND EQUIPMENT NECESSARY TO ALLOW OPERATION.
4. CONTROLS SHALL FAIL AS SPECIFIED HEREIN, OR TO MINIMIZE POSSIBILITY OF DAMAGE ON FAILURE IF NOT SPECIFIED HEREIN.
5. CONTROL SETPOINTS SHALL BE ADJUSTABLE OVER THE RANGE OF THE SENSED MEDIA. MEANS OF ADJUSTMENT AND CURRENT SETPOINT SHALL BE IDENTIFIED. BCS SETPOINTS AND ALARM LIMITS SHALL BE PROGRAMMED AS VARIABLES, EXPRESSED IN THE APPROPRIATE ENGINEERING UNITS, WHICH CAN BE ADJUSTED THROUGH THE DIGITAL DISPLAY UNIT OR FROM A CENTRAL STATION WITHOUT REQUIRING MODIFICATION OR RELOADING OF THE BCS CONTROL PROGRAMS. CONTROL, ALARM, AND LIMIT SETPOINTS FOR EACH BCS CONTROLLER SHALL BE DISPLAYED AND SHALL BE ADJUSTABLE FROM AN APPROPRIATELY PASSWORD-PROTECTED TABULAR GRAPHIC DISPLAY ASSOCIATED WITH THE APPROPRIATE EQUIPMENT. SETPOINTS OR ALARM LIMITS COMMON TO MULTIPLE CONTROL ALGORITHMS SHALL BE CONFIGURED AS A COMMON VARIABLE, REQUIRING A SINGLE ADJUSTMENT. PROVIDE AND ADJUST TIME DELAYS FOR SMOOTH AND SAFE OPERATION OF SYSTEMS.
6. CONTROL OUTPUTS SHALL PROVIDE MAXIMUM RATED ACTUATOR POWER AT EXTREMES OF ACTUATOR TRAVEL. CONTROL OUTPUT RANGE (0%-100%) SHALL CORRESPOND TO ACTUATOR TRAVEL (0%-100%).
7. WHERE SYSTEMS ARE SERVED BY EMERGENCY POWER, CONTROLS FOR OPERATION OF THOSE SYSTEMS SHALL ALSO BE SERVED BY EMERGENCY POWER.
8. WHERE DAMPERS PREVENT AIRFLOW THROUGH AN AIR HANDLING UNIT OR FAN, THOSE DAMPERS SHALL BE PROVEN OPEN PRIOR TO STARTING THE UNIT OR FAN. PROOF SHALL BE BY MECHANICAL SAFETY LIMIT SWITCH ACTIVATED BY THE DAMPER BLADE. THIS SWITCH SHALL BE WIRED IN THE AUTOMATIC AND HAND/TEST POSITIONS. AND IN THE BYPASS POSITION.

HVAC CONTROLS LEGEND:

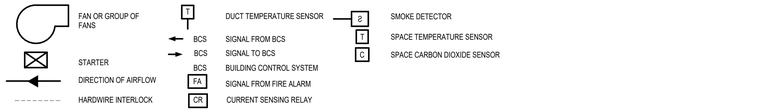

TOILET EXHAUST FAN SEQUENCE OF OPERATION

THE CONTROLS FOR TOILET EXHAUST FAN EF-1 SHALL FUNCTION AS FOLLOWS:

1. TOILET EXHAUST FAN SHALL BE INTERLOCKED TO OPERATE WITH RTU-2.
2. DURING OCCUPIED HOURS, THE TOILET EXHAUST FAN SHALL RUN CONTINUOUSLY. THE FAN SHALL RUN WHENEVER THE HAND-OFF-AUTOMATIC SWITCH IS IN THE AUTOMATIC POSITION, AND SHALL BE MANUALLY STARTED AND STOPPED BY THE HAND POSITION.

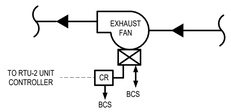

CONTROL DIAGRAM - TOILET EXHAUST FAN

ROOFTOP UNIT SEQUENCE OF OPERATION

THE CONTROLS FOR ROOFTOP UNITS (RTU-1 & RTU-2) SHALL FUNCTION AS FOLLOWS:

GENERAL
1. PROVIDE BACNET COMPLIANT DIGITAL CONTROLLER. THE SEQUENCES LISTED BELOW DESCRIBE THE PROGRAMMING OF THE FACTORY PROVIDED CONTROLLER. THE BCS SHALL ONLY PROVIDE SETPOINTS, MONITORING, AND ENABLE SIGNALS BASED ON OCCUPANCY. WHERE DIGITAL CONTROLLER IS DESCRIBED IN THE SEQUENCE, IT PERTAINS TO THE FACTORY CONTROLLER.
2. PROVIDE A HAND/OFF/AUTO SWITCH FOR EACH RTU. THE OUTSIDE AIR CONTROL DAMPER SHALL OPEN DURING OCCUPIED HOURS AND CLOSE DURING UNOCCUPIED HOURS.
3. TOILET EXHAUST FAN EF-1 SHALL BE INTERLOCKED TO OPERATE WITH RTU-2.

OCCUPIED MODE:
1. THE RTU SHALL OPERATE ACCORDING TO THE MANUFACTURER'S INTERNAL CONTROLS AND STANDARD SEQUENCES OF OPERATION TO MAINTAIN SPACE TEMPERATURE SETPOINTS BY INDEXING THE UNIT INTO COOLING MODE WHEN THE SPACE TEMPERATURE IS ABOVE THE OCCUPIED COOLING SETPOINT AND HEATING MODE WHEN THE SPACE TEMPERATURE FALLS BELOW THE OCCUPIED HEATING SETPOINT.
2. THE SUPPLY FAN SHALL RUN CONTINUOUSLY.

ECONOMIZER MODE:
1. INITIATE ECONOMIZER OPERATION ON A DROP IN OUTSIDE AIR ENTHALPY BELOW SETPOINT (ADJUSTABLE) DRY BULB TEMPERATURE BELOW SETPOINT FOR 15 MINUTES (ADJUSTABLE). DURING ECONOMIZER OPERATION, THE MINIMUM OUTSIDE AIR DAMPER SHALL BE OPEN.
2. MODULATE THE MAXIMUM OUTSIDE AIR DAMPER TO MAINTAIN A MIXED AIR TEMPERATURE EQUAL TO 2°F LESS THAN DISCHARGE AIR TEMPERATURE SETPOINT.
3. TERMINATE ECONOMIZER OPERATION WHEN OUTSIDE AIR ENTHALPY EXCEEDS ENTHALPY HIGH LIMIT SETPOINT OR DRY BULB TEMPERATURE EXCEEDS HIGH LIMIT SETPOINT (ADJUSTABLE) FOR 10 MINUTES (ADJUSTABLE).
4. A DROP IN MIXED AIR TEMPERATURE BELOW 45°F SHALL OVERRIDE OTHER DAMPER CONTROLS AND MODULATE THE MAXIMUM OUTSIDE AIR DAMPER TO LIMIT MIXED AIR TEMPERATURE TO 45°F.

UNOCCUPIED MODE / SHUTDOWN MODE :
1. DURING SHUTDOWN MODE, THE BCS SHALL SWITCH OFF THE UNIT AND CLOSE INTAKE AND EXHAUST DAMPER UNIT SHALL REMAIN OFF.
2. IF A CALL FOR CONDITIONING OCCURS DURING UNOCCUPIED HOURS THE UNIT SHALL START AND OPERATE TO MEET SETPOINT CONDITIONS.

SUPPLEMENTAL HEATER CONTROL:
1. THE FACTORY FURNISHED SUPPLEMENTAL HEATER SHALL BE OFF UNDER NORMAL CONDITIONS. IF THE HEAT PUMP FAILS OR CANNOT MAINTAIN THE HEATING SETPOINT, THE SUPPLEMENTAL HEATER SHALL BE ENABLED.

BCS INTERFACE: RTU CONTROLLER SHALL COMMUNICATE THE FOLLOWING DATA POINTS TO THE BCS

UNIT OPERATING STATUS	OUTSIDE AIR FLOW
UNIT MASTER ALARM STATUS	OUTSIDE AIR DAMPER POSITION
SUPPLY FAN SPEED	RETURN DAMPER POSITION
SUPPLY AIR STATIC PRESSURE	ECONOMIZER OPERATING STATUS
SUPPLY AIR TEMPERATURE	EXHAUST DAMPER POSITION
SUPPLY AIR DEWPOINT	ELECTRIC HEAT STATUS / ALARM
SUPPLY AIR RELATIVE HUMIDITY	A2L REFRIGERANT LEAK DETECTION STATUS / ALARM
RETURN AIR TEMPERATURE	FILTER STATUS / ALARM
RETURN AIR RELATIVE HUMIDITY	

FIRE ALARM SYSTEM: UPON ACTIVATION OF THE FIRE ALARM SYSTEM, THE UNIT SHALL SHUT DOWN BY MEANS OF HARD WIRED CONNECTIONS FROM THE FIRE ALARM PANEL.

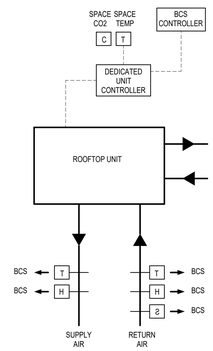

CONTROL DIAGRAM - ROOFTOP AIR HANDLING UNIT

MECHANICAL SPECIFICATIONS

SUBMITTALS SHALL INCLUDE THE FOLLOWING:

1. AIR DISTRIBUTION DEVICES, INCLUDING GRILLES, REGISTERS, DIFFUSERS, DAMPERS, FLEXIBLE DUCTWORK, AND ANY OTHER AIR DISTRIBUTION SPECIALTIES.
2. AUTOMATIC TEMPERATURE CONTROLS. EACH CONTROL DEVICE, SOFTWARE, SEQUENCE OF OPERATION, AND CONTROL SCHEMATIC AND I/O SUMMARY SUBMITTAL SHALL BE CROSS-REFERENCED TO A SPECIFIC REQUIREMENT IN THE DRAWINGS.
3. CERTIFIED TESTING, ADJUSTING, AND BALANCING REPORTS, INCLUDING REPORTS AND CHECKLISTS SPECIFIED UNDER PERFORMANCE VERIFICATION AND TAB SECTIONS.
4. SHEET METAL SYSTEM DRAWINGS, SHOWING AIR DISTRIBUTION EQUIPMENT, INCLUDING REQUIRED CLEARANCES AROUND CONTROL PANELS, COILS, FILTERS, RETURN AIR OPENINGS, AND OTHER COMPONENTS, DUCTWORK, FITTINGS, DAMPERS, PLENUMS, ELEVATIONS, DIMENSIONS, OFFSETS, AND TRANSITIONS COORDINATED WITH PIPING, BUILDING CONDITIONS, AND OTHER TRADES, MINIMUM 1/4" = 1'-0" SCALE.
5. PACKAGED ROOFTOP UNITS
6. CENTRIFUGAL POWER ROOF VENTILATOR
7. UNIT HEATER
8. AIR TERMINALS

SECTION 23 05 13 - COMMON MOTOR REQUIREMENTS FOR HVAC EQUIPMENT
1. COMPLY WITH NEMA MG 1 UNLESS OTHERWISE INDICATED. DUTY: CONTINUOUS DUTY AT AMBIENT TEMPERATURE OF 40 DEG C AND AT ALTITUDE OF 3300 FEET ABOVE SEA LEVEL
2. POLYPHASE MOTORS: NEMA MG 1, DESIGN B, MEDIUM INDUCTION MOTOR, PREMIUM EFFICIENT, AS DEFINED IN NEMA MG. SERVICE FACTOR: 1.15

SECTION 23 05 17 - SLEEVES AND SLEEVE SEALS FOR HVAC PIPING
1. CAST-IRON PIPE SLEEVES: CAST OR FABRICATED OF CAST OR DUCTILE IRON AND EQUIVALENT TO DUCTILE-IRON PRESSURE PIPE, WITH PLAIN ENDS AND INTEGRAL WATERSTOP COLLAR.
2. INSTALL SLEEVES FOR PIPING PASSING THROUGH PENETRATIONS IN FLOORS, PARTITIONS, WALLS, AND ROOFS

SECTION 23 05 29 - HANGERS AND SUPPORTS FOR HVAC PIPING AND EQUIPMENT
1. CARBON-STEEL PIPE HANGERS AND SUPPORTS. DESCRIPTION: MSS SP-58, TYPES 1 THROUGH 58, FACTORY-FABRICATED COMPONENTS. GALVANIZED METALLIC COATINGS: PREGALVANIZED, HOT-DIP GALVANIZED, OR ELECTRO-GALVANIZED. HANGER RODS: CONTINUOUS-THREAD ROD, NUTS, AND WASHER MADE OF CARBON STEEL.
2. TRAPEZE PIPE HANGERS. DESCRIPTION: MSS SP-58, TYPE 59, SHOP- OR FIELD-FABRICATED PIPE-SUPPORT ASSEMBLY MADE FROM STRUCTURAL CARBON-STEEL SHAPES WITH MSS SP-58 CARBON-STEEL HANGER RODS, NUTS, SADDLES, AND U-BOLTS.
3. INSULATION-INSERT MATERIAL FOR HOT PIPING. WATER-REPELLENT-TREATED, ASTM C533, TYPE I CALCIUM SILICATE WITH 100-PSI MINIMUM COMPRESSIVE STRENGTH. FOR TRAPEZE OR CLAMPED SYSTEMS: INSERT AND SHIELD SHALL COVER ENTIRE CIRCUMFERENCE OF PIPE. FOR CLEVIS OR BAND HANGERS: INSERT AND SHIELD SHALL COVER LOWER 180 DEGREES OF PIPE. INSERT LENGTH: EXTEND 2 INCHES BEYOND SHEET METAL SHIELD FOR PIPING OPERATING BELOW AMBIENT AIR TEMPERATURE.

SECTION 23 05 48 - VIBRATION CONTROLS FOR HVAC
1. VIBRATION ISOLATORS SHALL BE INSTALLED AND CONNECTED AS SPECIFIED OR INDICATED ON THE DRAWINGS IN ACCORDANCE WITH THE MANUFACTURER'S WRITTEN INSTRUCTIONS AND CERTIFIED SUBMITTAL DATA.
1. NO RIGID CONNECTION SHALL BE MADE THAT DEGRADES THE NOISE AND VIBRATION CONTROL SYSTEMS PROVIDED IN THE SPECIFICATIONS OR THE DRAWINGS.
2. CONFLICTS WITH OTHER TRADES THAT WILL RESULT IN DIRECT CONTACT WITH ISOLATED EQUIPMENT, PIPING, OR DUCTWORK SHALL BE BROUGHT TO THE ATTENTION OF THE ENGINEER PRIOR TO INSTALLATION.
3. ISOLATED EQUIPMENT MOUNTING SYSTEMS SHALL PERMIT EQUIPMENT MOTION IN ALL DIRECTIONS.

SECTION 23 05 53 - IDENTIFICATION FOR HVAC PIPING AND EQUIPMENT
1. METAL LABELS FOR EQUIPMENT. ANODIZED ALUMINUM, 0.032-INCH MINIMUM THICKNESS, AND HAVING PREDRILLED OR STAMPED HOLES FOR ATTACHMENT HARDWARE. FASTENERS: STAINLESS-STEEL RIVETS OR SELF-TAPPING SCREWS.
2. PIPE LABELS: PREPRINTED, COLOR-CODED, WITH LETTERING INDICATING SERVICE, AND SHOWING FLOW DIRECTION ACCORDING TO ASME A13.1. PRETENSIONED PIPE LABELS: PRECOILED, SEMIRIGID PLASTIC FORMED TO COVER FULL CIRCUMFERENCE OF PIPE AND TO ATTACH TO PIPE WITHOUT FASTENERS OR ADHESIVE.
3. DUCT LABEL CONTENTS: INCLUDE IDENTIFICATION OF DUCT SERVICE USING SAME DESIGNATIONS OR ABBREVIATIONS AS USED ON DRAWINGS; ALSO INCLUDE DUCT SIZE AND AN ARROW INDICATING FLOW DIRECTION. ADHESIVE: CONTACT-TYPE PERMANENT ADHESIVE, COMPATIBLE WITH LABEL AND WITH SUBSTRATE. MULTILAYER, MULTICOLOR, PLASTIC LABELS FOR MECHANICAL ENGRAVING.

SECTION 23 05 93 - TESTING, ADJUSTING, AND BALANCING FOR HVAC
1. TAB SPECIALISTS QUALIFICATIONS. CERTIFIED BY NEBB OR TABB. INSTRUMENTATION TYPE, QUANTITY, ACCURACY, AND CALIBRATION: COMPLY WITH REQUIREMENTS IN ASHRAE 111, SECTION 4, "INSTRUMENTATION. ASHRAE/IES 90.1 COMPLIANCE: APPLICABLE REQUIREMENTS IN ASHRAE/IES 90.1, SECTION 6.7.2.3 - "SYSTEM BALANCING."
2. EXAMINE THE CONTRACT DOCUMENTS TO BECOME FAMILIAR WITH PROJECT REQUIREMENTS AND TO DISCOVER CONDITIONS IN SYSTEMS DESIGNS THAT MAY PRECLUDE PROPER TAB OF SYSTEMS AND EQUIPMENT. EXAMINE INSTALLED SYSTEMS FOR BALANCING DEVICES, SUCH AS TEST PORTS, GAUGE COCKS, THERMOMETER WELLS, FLOW-CONTROL DEVICES, BALANCING VALVES AND FITTINGS, AND MANUAL VOLUME DAMPERS. VERIFY THAT LOCATIONS OF THESE BALANCING DEVICES ARE APPLICABLE FOR INTENDED PURPOSE AND ARE ACCESSIBLE. EXAMINE THE APPROVED SUBMITTALS FOR HVAC SYSTEMS AND EQUIPMENT. EXAMINE TEMPORARY AND PERMANENT STRAINERS. VERIFY THAT TEMPORARY STRAINER SCREENS USED DURING SYSTEM CLEANING AND FLUSHING HAVE BEEN REMOVED AND PERMANENT STRAINER BASKETS ARE INSTALLED AND CLEAN.
3. PERFORM TESTING AND BALANCING PROCEDURES ON EACH SYSTEM IN ACCORDANCE WITH THE PROCEDURES CONTAINED IN AABC'S "NATIONAL STANDARDS FOR TOTAL SYSTEM BALANCE" AND IN THIS SECTION. MARK EQUIPMENT AND BALANCING DEVICES, INCLUDING DAMPER-CONTROL POSITIONS, VALVE POSITION INDICATORS, FAN-SPEED-CONTROL LEVERS, AND SIMILAR CONTROLS AND DEVICES, WITH PAINT OR OTHER SUITABLE, PERMANENT IDENTIFICATION MATERIAL TO SHOW FINAL SETTINGS.
4. PATCH HOLES IN INSULATION, VAPOR BARRIERS, DUCTWORK, AND HOUSINGS, WHICH HAVE BEEN CUT OR DRILLED FOR TEST PURPOSES. POSITION AND SECURE MEMORY STOPS ON VALVES USED FOR BALANCING. MARK EQUIPMENT SETTINGS, INCLUDING DAMPER CONTROL POSITIONS, VALVE INDICATORS, MEMORY STOP POSITIONS, AND CONTROLS AND DEVICES, TO SHOW FINAL SETTINGS AT COMPLETION OF TESTING, ADJUSTING, AND BALANCING WORK. PROVIDE MARKINGS WITH PAINT OR PERMANENT IDENTIFICATION MATERIALS.
5. TEST, ADJUST, AND BALANCE ALL NEW EQUIPMENT.
6. SUBMIT FINAL TAB REPORT FOR REVIEW BY ENGINEER OF RECORD.

SECTION 23 07 13 - DUCT INSULATION
1. INDOOR SUPPLY, RETURN, OUTDOOR-AIR DUCT: BLANKET FIBERGLASS, 2 INCHES THICK AND 0.75-LB/CU. FT. NOMINAL DENSITY, WITH FOIL-SCRIM-KRAFT FACING. INSULATION SHALL BE MINIMUM R-6 FOR UNCONDITIONED SPACES. OVERLAP EDGES 3" AND SECURE 12" ON CENTER WITH COPPER-CLAD, STAINLESS STEEL OR GALVANIZED STEEL WIRE. SEAL JOINTS, BREAKS, AND PUNCTURES WITH FSK TAPE. ON DUCTS OVER 36" WIDE, INSULATION SHALL BE SECURED TO THE UNDERSIDE WITH MECHANICAL FASTENERS MAXIMUM 18" ON CENTER EACH WAY.
2. OUTDOOR EXPOSED SUPPLY AND RETURN-AIR DUCTS AND PLENUMS: FIBERGLASS BLANKET, 2 INCHES THICK AND 0.75-LB/CU. FT. NOMINAL DENSITY, WITH FIELD APPLIED JACKET MADE OF ALUMINUM, (SMOOTH, OR STUCCO EMBOSSED) 0.016 INCHES THICK. INSULATION SHALL BE MINIMUM R-8 PER IECC.
3. CONCEALED, TYPE I, COMMERCIAL, KITCHEN HOOD EXHAUST DUCT AND PLENUM INSULATION: FIRE-RATED BLANKET; THICKNESS AS REQUIRED TO ACHIEVE 2-HOUR FIRE RATING.
4. FIBERGLASS BLANKET INSULATION: MINERAL OR GLASS FIBERS BONDED WITH A THERMOSETTING RESIN. COMPLY WITH ASTM C553, TYPE II AND ASTM C1290, TYPE III WITH FACTORY-APPLIED FSK JACKET.
5. FIRE-RATED BLANKET: HIGH-TEMPERATURE, FLEXIBLE, BLANKET INSULATION WITH FSK JACKET THAT IS TESTED AND CERTIFIED TO PROVIDE A 2-HOUR FIRE RATING BY AN NRTL ACCEPTABLE TO AUTHORITIES HAVING JURISDICTION.
6. FIBERGLASS ADHESIVE: COMPLY WITH MIL-A-3316C, CLASS 2, GRADE A. FSK JACKET ADHESIVE: COMPLY WITH MIL-A-3316C, CLASS 2, GRADE A FOR BONDING INSULATION JACKET LAP SEAMS AND JOINTS.
7. VAPOR-RETARDER MASTIC; WATER BASED; SUITABLE FOR INDOOR USE ON BELOW AMBIENT SERVICES. WATER-VAPOR PERMEANCE: COMPLY WITH ASTM C755, SECTION 7.2.2, TABLE 2, FOR INSULATION TYPE AND SERVICE CONDITIONS.
8. FSK TAPE: FOIL-FACE, VAPOR-RETARDER TAPE MATCHING FACTORY-APPLIED JACKET WITH ACRYLIC ADHESIVE; COMPLYING WITH ASTM C1136.
9. METAL, ADHESIVELY ATTACHED, PERFORATED-BASE INSULATION HANGERS: BASEPLATE WELDED TO PROJECTING SPINDLE THAT IS CAPABLE OF HOLDING INSULATION, OF THICKNESS INDICATED, SECURELY IN POSITION INDICATED WHEN SELF-LOCKING WASHER IS IN PLACE. COMPLY WITH THE FOLLOWING REQUIREMENTS. BASEPLATE: PERFORATED, GALVANIZED CARBON-STEEL SHEET, 0.030 INCH THICK BY 2 INCHES SQUARE. SPINDLE: COPPER- OR ZINC-COATED, LOW-CARBON STEEL, FULLY ANNEALED, 0.106-INCH- DIAMETER SHANK, LENGTH TO SUIT DEPTH OF INSULATION INDICATED. ADHESIVE: RECOMMENDED BY HANGER MANUFACTURER. PRODUCT WITH DEMONSTRATED CAPABILITY TO BOND INSULATION HANGER SECURELY TO SUBSTRATES INDICATED WITHOUT DAMAGING INSULATION, HANGERS, AND SUBSTRATES.
10. INSULATION SHALL BE CLEAN AND DRY DURING INSTALLATION AND DURING APPLICATION OF ANY FINISH. INSTALL INSULATION MATERIALS WITH SMOOTH AND EVEN SURFACES; JACKETS DRAWN TIGHT AND CEMENTED DOWN SMOOTHLY AT LONGITUDINAL AND END LAPS. DO NOT USE SCRAP PIECES OF INSULATION WHERE A FULL-LENGTH SECTION WILL FIT.

SECTION 23 07 19 - HVAC PIPING INSULATION
1. REFRIGERANT PIPING: FLEXIBLE ELASTOMERIC. SUCTION: 2 INCHES, LIQUID: 1 INCH. CLOSED-CELL, SPONGE- OR EXPANDED-RUBBER MATERIALS. COMPLY WITH ASTM C534/C534M, TYPE I FOR TUBULAR MATERIALS.
2. SOLVENT-BASED FLEXIBLE ELASTOMERIC ADHESIVE. SERVICE TEMPERATURE RANGE: 40 TO 200 DEG F.
3. OUTDOOR PIPING: PVC JACKET 20 MILS THICK, HIGH-IMPACT-RESISTANT, UV-RESISTANT PVC COMPLYING WITH ASTM D1784, CLASS 16354-C. ADHESIVE: AS RECOMMENDED BY JACKET MATERIAL MANUFACTURER.
4. INSULATION SHALL BE CONTINUOUS THROUGH WALL AND ROOF PENETRATIONS.

SECTION 23 09 23 - DIRECT DIGITAL CONTROL (DDC) SYSTEM FOR HVAC
1. UTILIZE EXISTING BAS (BUILDING AUTOMATION SYSTEM) ARCHITECTURE. ADD CONTROLLERS/HARDWARE AS REQUIRED.
2. NETWORK COMMUNICATION PROTOCOL(S) USED THROUGHOUT ENTIRE DDC SYSTEM SHALL BE OPEN TO OWNER AND AVAILABLE TO OTHER CONTRACTORS FOR USE IN MAKING FUTURE MODIFICATIONS TO DDC SYSTEM.
3. PROVIDE SPARE I/O POINT CAPACITY IN EACH NEW CONTROLLER EQUAL TO 20% OF POINTS.
4. UTILIZE MANUFACTURER'S PACKAGED CONTROLLERS FOR ROOFTOP UNITS. BAS SYSTEM SHALL MONITOR POINTS / CONTROL EQUIPMENT.
5. SPACE TEMPERATURE SENSORS: SPACE TEMPERATURE TYPE WITH SETPOINT ADJUSTMENT RANGE OF 45ºF TO 85ºF, COVER WITH VISIBLE TEMPERATURE INDICATOR, AND ACCESSIBLE MEANS OF SETPOINT ADJUSTMENT. THE SETPOINT ADJUSTMENT SHALL BE LOCKED OUT, OVERRIDDEN, OR LIMITED AS TO TIME OR TEMPERATURE IN SOFTWARE FROM A CENTRAL OR REMOTE OPERATOR'S TERMINAL. PRECISION THERMISTORS MAY BE USED. SENSOR ACCURACY OVER THE APPLICATION RANGE SHALL BE MINIMUM 0.9ºF BETWEEN THE RANGE OF 32ºF TO 150ºF INCLUDING SENSOR ERROR AND A/D CONVERSION RESOLUTION ERROR. SENSOR MANUFACTURER SHALL UTILIZE 100% SCREENING TO VERIFY ACCURACY. THERMISTORS SHALL BE PRE-AGED AND INHERENTLY STABLE. STABILITY ERROR OF THE THERMISTOR OVER

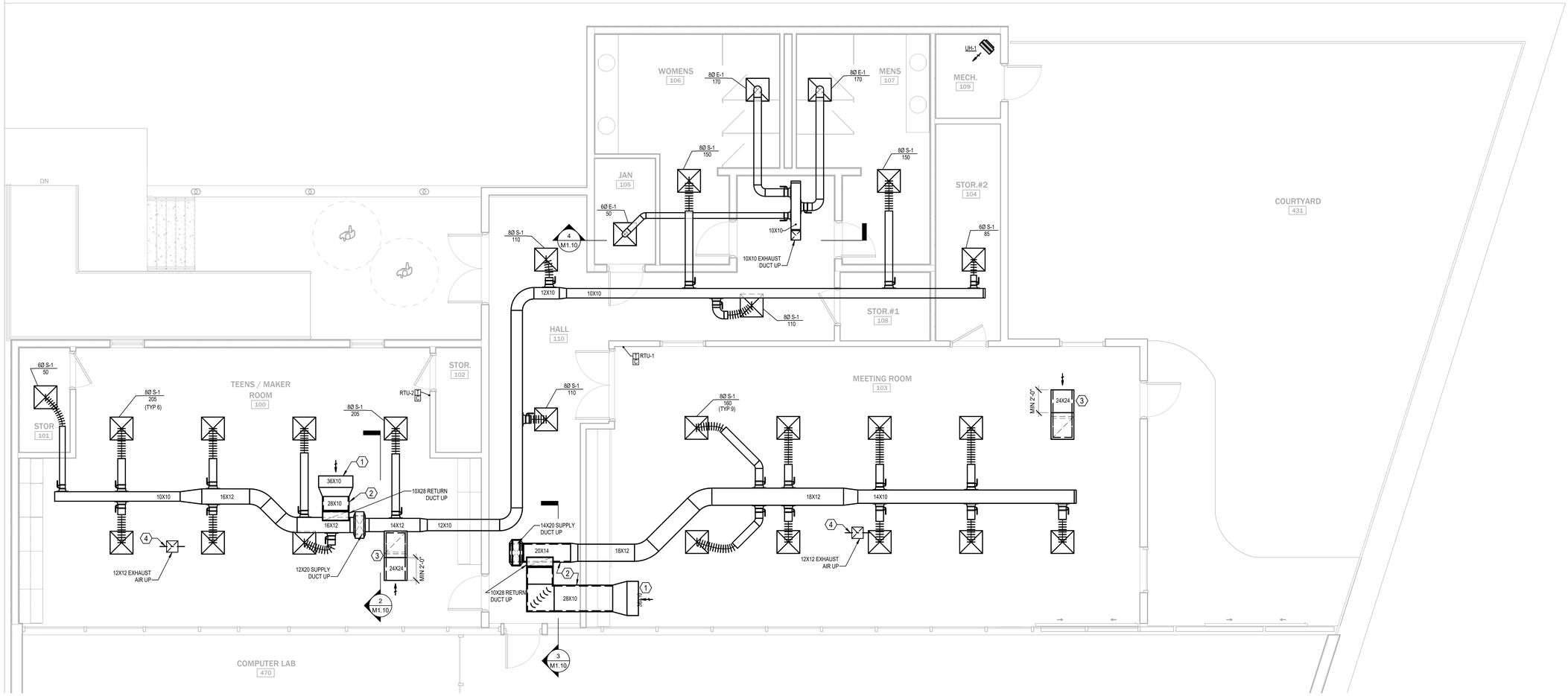

1 MECHANICAL FLOOR PLAN

SCALE: 1/4" = 1'-0"

1/4" = 1'-0" 2 0 2 4 8 SCALE FEET

GENERAL NOTES

1. REFER TO SHEET M0.01 FOR PROJECT GENERAL NOTES.
2. DUCT SIZES ARE SHOWN ON DRAWINGS ARE SHEET METAL SIZES. WHERE INTERNAL LINING OR DOUBLE WALL DUCTWORK ARE INDICATED, DIMENSIONS ACCOUNT FOR THE THICKNESS OF THE INSULATION.
3. ALL RUNOUTS TO AIR TERMINALS ARE NECK SIZE UNLESS OTHERWISE NOTED.

KEY NOTES THIS SHEET

1. OPEN ENDED DUCT WITH WIRE MESH SCREEN COVERING.
2. PROVIDE 1" FIBER FREE TYPE LINER AT LOCATION INDICATED.
3. PROVIDE R-1 TYPE RETURN AIR GRILLE WITH 1" FIBER FREE LINED TRANSFER AIR BOOT.
4. 12X12 EXHAUST AIR UP TO RELIEF HOOD. PROVIDE BAROMETRIC RELIEF DAMPER IN VERTICAL DUCTWORK AND SET TO OPEN AT +0.01 IN WG.

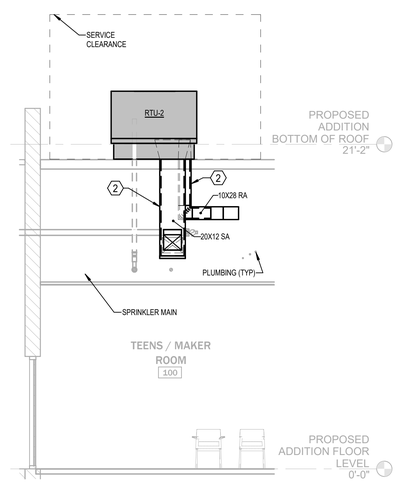

2 HVAC SECTION - ROOFTOP UNIT RTU-2

SCALE: 1/4" = 1'-0"

1/4" = 1'-0" 2 0 2 4 8 SCALE FEET

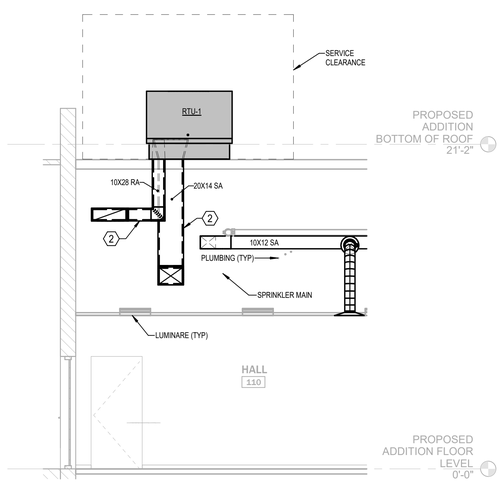

3 HVAC SECTION - ROOFTOP UNIT RTU-1

SCALE: 1/4" = 1'-0"

1/4" = 1'-0" 2 0 2 4 8 SCALE FEET

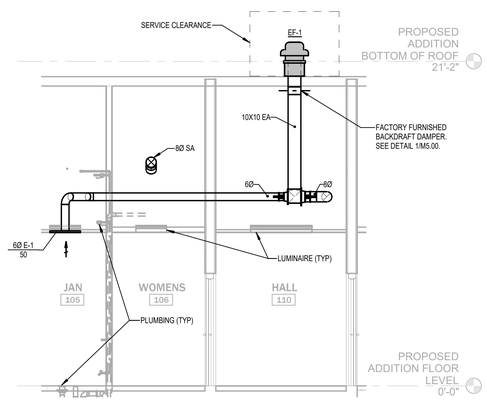

4 HVAC SECTION - EXHAUST FAN DUCTWORK

SCALE: 1/4" = 1'-0"

1/4" = 1'-0" 2 0 2 4 8 SCALE FEET

CLAYTON COUNTY LIBRARY SYSTEM

RIVERDALE LIBRARY ADDITION

420 Valley Hill Rd, Riverdale, GA 30274

HAMMOND ENGINEERING, INC
CONSULTING ENGINEERS
6961 PEACHTREE INDUSTRIAL BLVD. #208
NORCROSS, GEORGIA, 30092
TEL: (678)292-6937
NATHANIEL D. HAMMOND P.E.
MECHANICAL/ELECTRICAL ENGINEER
P.E. #047450

RELEASED FOR CONSTRUCTION

Revisions

No.	Date	Description
	03/19/2025	50% SET
	03/28/2025	100% SET
	03/31/2025	100% SET
	06/10/2025	100% SET

GEORGIA REGISTERED PROFESSIONAL ENGINEER NATHANIEL D. HAMMOND PE047450

06/10/2025

Gardner Spencer Smith Tench & Jarbeau
A Professional Corporation for the Practice of Architecture
www.gsstj.com

50 Hurt Plaza SW, Suite 1100
Atlanta, Georgia 30303
404.522.8805
404.521.2118 (F)

PROJECT NO.

24105

SHEET TITLE

MECHANICAL FLOOR PLAN

SHEET NO.

M1.10

© 2025 - THESE DOCUMENTS REMAIN THE PROPERTY OF THE ARCHITECT AND MAY NOT BE USED, OR REPRODUCED WITHOUT WRITTEN PERMISSION.

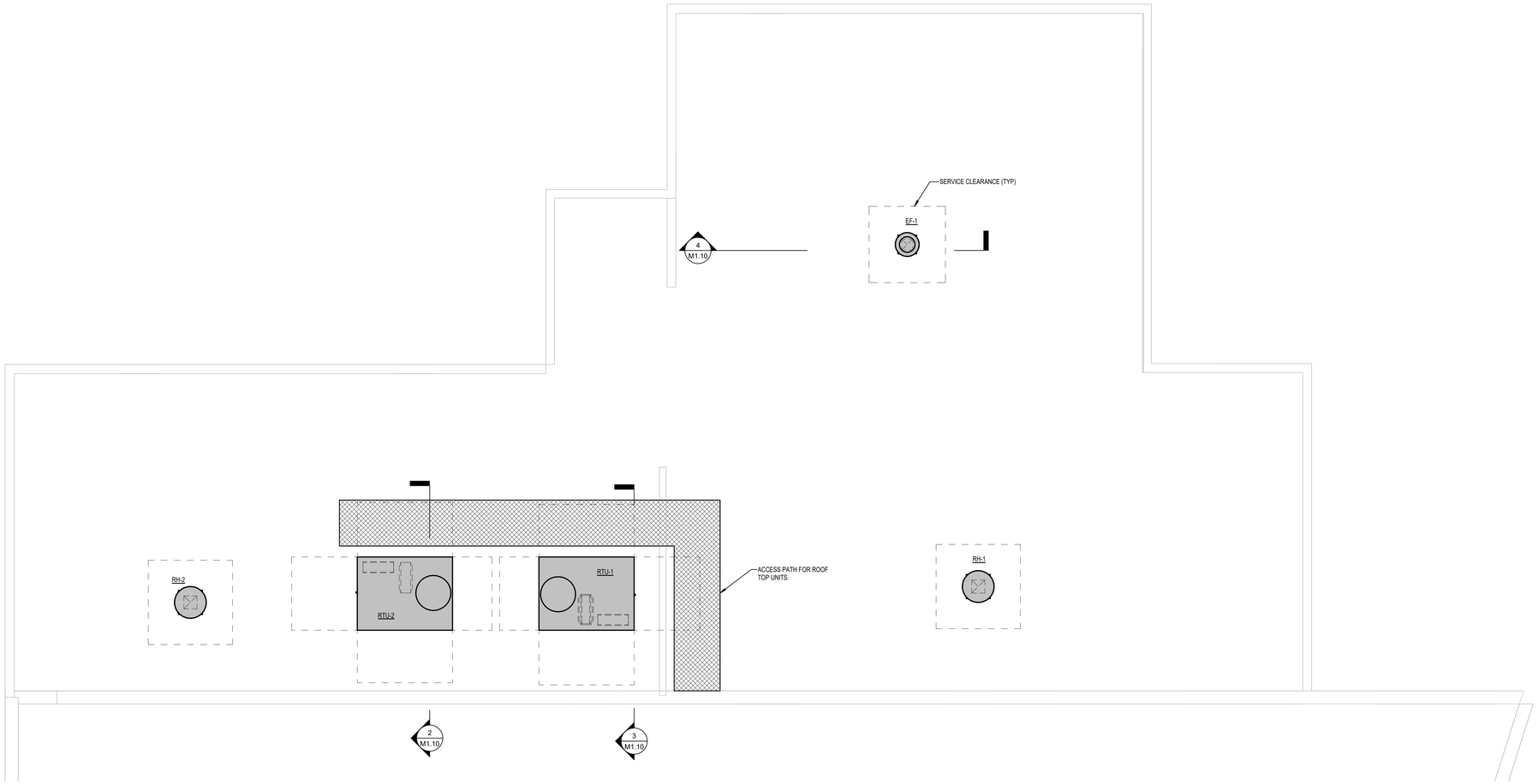

1 MECHANICAL ROOF PLAN

SCALE: 1/4" = 1'-0"

2 0 2 4 8

1/4" = 1'-0" SCALE FEET

CLAYTON COUNTY LIBRARY SYSTEM

RIVERDALE LIBRARY ADDITION

420 Valley Hill Rd, Riverdale, GA 30274

HAMMOND ENGINEERING, INC
CONSULTING ENGINEERS
6961 PEACHTREE INDUSTRIAL BLVD. #208
NORCROSS, GEORGIA, 30092
TEL: (678)292-6937
NATHANIEL D. HAMMOND P.E.
MECHANICAL/ELECTRICAL ENGINEER
P.E. #047450

© 2025 - THESE DOCUMENTS REMAIN THE PROPERTY OF THE ARCHITECT AND MAY NOT BE USED OR REPRODUCED WITHOUT WRITTEN PERMISSION.

RELEASED FOR CONSTRUCTION

Revisions

No.	Date	Description
	03/19/2025	50% SET
	03/28/2025	100% SET
	03/31/2025	100% SET
	06/10/2025	100% SET

GEORGIA REGISTERED PROFESSIONAL ENGINEER NATHANIEL D. HAMMOND PE047450

06/10/2025

Gardner Spencer Smith Tench & Jarbeau
A Professional Corporation
for the Practice of Architecture
www.gsstj.com

50 Hurt Plaza SW,
Suite 1100
Atlanta, Georgia
30303
404.522.8805
404.521.2118 (F)

PROJECT NO.

24105

SHEET TITLE

MECHANICAL ROOF PLAN

SHEET NO.

M1.20

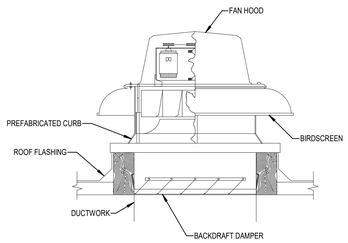

1 HVAC DETAIL - CENTRIFUGAL EXHAUST FAN
SCALE: NO SCALE

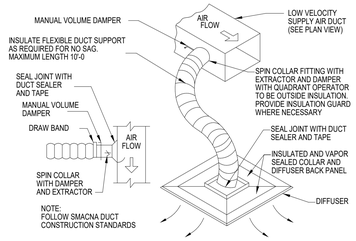

2 HVAC DETAIL - FLEX DUCT CONNECTION
SCALE: NO SCALE

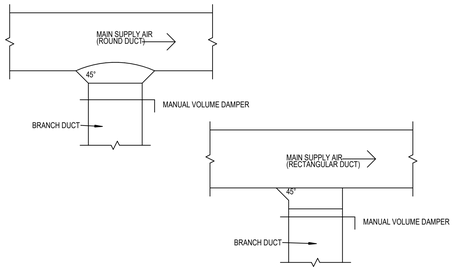

3 HVAC DETAIL - BRANCH TAKE-OFF DETAIL FOR LOW PRESSURE DUCT
SCALE: NO SCALE

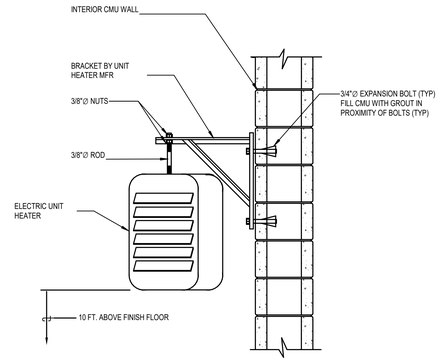

4 UNIT HEATER SUPPORT DETAIL
SCALE: NO SCALE

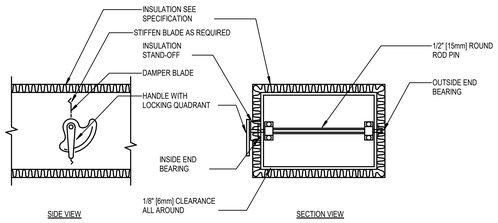

5 VOLUME DAMPER DETAIL
SCALE: NO SCALE

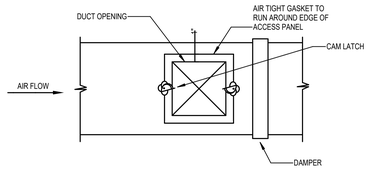

ACCESS PANEL SIZE SCHEDULE	
DUCT SIZE	ACCESS PANEL SIZE
6" TO 15"	10" W x (DAMPER DEPTH-2") D
15" TO 21"	12" W x (DAMPER DEPTH-2") D
21' AND ABOVE	18" W x (DAMPER DEPTH-2") D

ALL OTHER ACCESS PANELS TO BE A MINIMUM OF 15" x 15" WHERE DUCT SIZE ALLOWS. USE FOUR CAM LATCHES ON PANELS LARGER THAN 18" x 18" SIZE.

6 ACCESS PANEL DETAIL
SCALE: NO SCALE

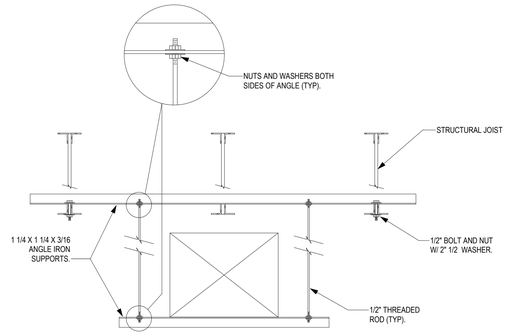

7 TYPICAL DUCT HANGER DETAIL
SCALE: NO SCALE

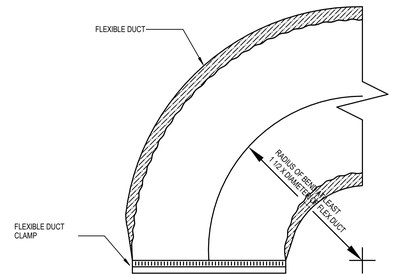

8 FLEXIBLE DUCT WITH CLAMP DETAIL
SCALE: NO SCALE

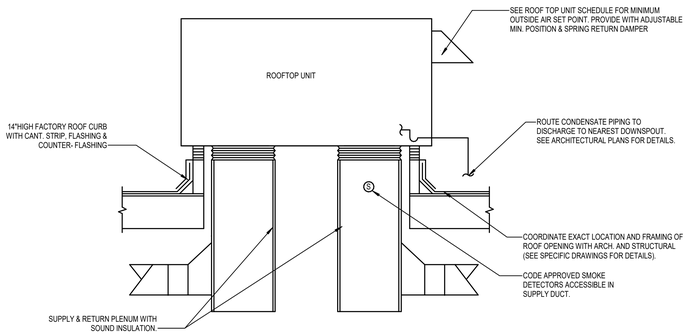

NOTES:
COORDINATE EXACT LOCATION AND FRAMING OF ROOF OPENING WITH ARCH. AND STRUCTURAL (SEE SPECIFIC DRAWINGS FOR DETAILS).

9 TYPICAL ROOFTOP AIR HANDLING UNIT
SCALE: NO SCALE

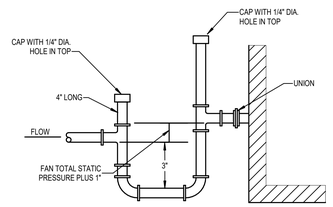

NOTES:

1. PIPING SHALL BE FULL SIZE OF DRAIN PAN CONNECTION, OR 1" MINIMUM.
2. PIPE TO ROOF DOWNSPOUT.
3. LOCATE TRAPS SO AS TO BE ACCESSIBLE FOR CLEANING.
4. INSULATE DRAIN PIPING PER SPECIFICATIONS.
5. PVC PIPE LOCATED IN PLENUM SPACE SHALL BE WRAPPED IN FIRE RATED INSULATION.
6. SLOPE PIPING DOWN 1/2" PER FOOT IN DIRECTION OF FLOW.
7. PIPING SHOULD REPRESENT SCREWED FITTINGS. REFER TO SPECIFICATIONS FOR PIPING MATERIAL, FITTINGS AND INSTALLATION REQUIREMENTS.

10 CONDENSATE DRAIN TRAP DETAIL
SCALE: NO SCALE

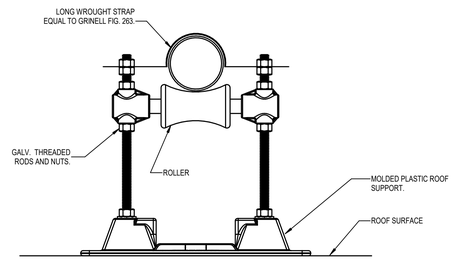

11 CONDENSATE ROOF PIPE STAND DETAIL
SCALE: NO SCALE

CLAYTON COUNTY LIBRARY SYSTEM

RIVERDALE LIBRARY ADDITION

420 Valley Hill Rd, Riverdale, GA 30274

HAMMOND ENGINEERING, INC
CONSULTING ENGINEERS
6961 PEACHTREE INDUSTRIAL BLVD. #208
NORCROSS, GEORGIA. 30092
TEL: (678)292-6937
NATHANIEL D. HAMMOND P.E.
MECHANICAL/ELECTRICAL ENGINEER
P.E. #047450

© 2025 - THESE DOCUMENTS REMAIN THE PROPERTY OF THE ARCHITECT AND MAY NOT BE USED, OR REPRODUCED WITHOUT WRITTEN PERMISSION.

RELEASED FOR CONSTRUCTION

Revisions

No.	Date	Description
	03/19/2025	50% SET
	03/28/2025	100% SET
	03/31/2025	100% SET
	06/10/2025	100% SET

GEORGIA REGISTERED PROFESSIONAL ENGINEER NATHANIEL D. HAMMOND

06/10/2025

Gardner Spencer Smith Tench & Jarbeau
A Professional Corporation for the Practice of Architecture
www.gsstj.com
50 Hurt Plaza SW, Suite 1100
Atlanta, Georgia 30303
404.522.8805
404.521.2118 (F)

PROJECT NO.
24105

SHEET TITLE
MECHANICAL DETAILS

SHEET NO.
M5.00

ELECTRICAL LEGEND

S	WALL SWITCH SINGLE POLE SINGLE THROW, 48" AFF UNO.
S3	WALL SWITCH 3-WAY, SINGLE POLE SINGLE THROW, 48" AFF UNO.
S4	WALL SWITCH 4-WAY, SINGLE POLE SINGLE THROW, 48" AFF UNO.
SO	WALL OCCUPANCY SENSOR-SINGLE OR 3 WAY, 48" AFF UNO. DUAL TECHNOLOGY, MOTION AND INFRA-RED.
SK	WALL MOUNTED KEYED SWITCH, 48" AFF UNO.
	WALL/CEILING-MOUNTED OCCUPANCY SENSOR, DUALTECHNOLOGY, MOTION AND INFRA-RED.
SD	WALL MOUNTED DIMMER SWITCH, WATTAGE NOTED (SIZE/WATTAGE AS REQUIRED), 48" AFF UNO.
SD3	WALL MOUNTED 3-WAY DIMMER SWITCH, WATTAGE NOTED (SIZE/WATTAGE AS REQUIRED), 48" AFF UNO.
	DUPLEX RECEPTACLE, WALL MOUNTED, 18" AFF UNO.
	SINGLE RECEPTACLE, WALL MOUNTED, 18" AFF UNO.
	DUPLEX RECEPTACLE, CEILING MOUNTED
	DUPLEX RECEPTACLE, WALL MOUNTED AFF, OR 8" ABOVE COUNTER UNO.
	SWITCHED OUTLET
USB	USB OUTLET WALL MOUNTED, 18" AFF UNO.
	QUAD RECEPTACLE, WALL MOUNTED, 18" AFF UNO.
	QUAD RECEPTACLE, WALL MOUNTED AFF, OR 8" ABOVE COUNTER UNO.
	DUPLEX "GFCI" RECEPTACLE, WALL MOUNTED, 18" AFF UNO.
	DUPLEX "GFCI" RECEPTACLE, WALL MOUNTED AFF, OR 8" ABOVE COUNTER UNO.
	SPECIAL OUTLET WALL MOUNTED, 18" AFF UNO.
	DUPLEX RECEPTACLE, IN FLUSH FLOOR BOX
	JUNCTION BOX
	WALL MOUNTED JUNCTION BOX
	SURFACE MOUNTED PANELBOARD
	FLUSH MOUNTED PANELBOARD
	SAFETY SWITCH, NON FUSED TYPE
	SAFETY SWITCH, FUSED TYPE
	PUSH BUTTON, WALL MOUNTED 46" AFF
	DOOR BELL AUDIO/VISUAL DEVICE, WALL MOUNTED
	EXHAUST FAN. COORDINATE EXACT LOCATION AND REQUIREMENTS WITH MECHANICAL CONTRACTOR.

	CONDUIT EXPOSED TO VIEW UNLESS OTHERWISE NOTED
	WIRE CONCEALED IN CEILING, CAVITY OR WALL
	CONDUIT CONCEALED IN FLOOR, SLAB OR UNDERGROUND
	CONDUIT UP/CONDUIT DOWN
	1X4 WALL MOUNTED WRAP AROUND LED FIXTURE. SEE LIGHT FIXTURE SCHEDULE.
	EMERGENCY FIXTURE WITH 90 MIN BATTERY. 1400 LUMEN BALLAST.
	INDUSTRIAL LED STRIP FIXTURE, SURFACE OR STRIP SUSPENDED . SEE LIGHT FIXTURE SCHEDULE.
	EMERGENCY FIXTURE WITH 90 MIN BATTERY. 1400 LUMEN BALLAST.
	BATTERY POWER EMERGENCY LIGHT (PROVIDE UNSWITCHED HOT WIRE) SEE LIGHT FIXTURE SCHEDULE.
	EMERGENCY REMOTE HEAD INTERCONNECTED TO EXIT SIGN. OVERSIZE BATTERY IN EXIT SIGN.
	EXIT SIGN, CEILING/WALL MOUNTED ARROWS AS REQUIRED. (PROVIDE UNSWITCHED HOT WIRE) SEE LIGHT FIXTURE SCHEDULE.
	TRACK LIGHTING NUMBER OF HEADS AND LENGTH AS INDICATED ON DRAWINGS. SEE LIGHT FIXTURE SCHEDULE.
	2'x4' RECESSED MOUNTED FLUORESCENT FIXTURE. SEE LIGHT FIXTURE SCHEDULE.
	SURFACE OR RECESSED LIGHT FIXTURE. SEE LIGHT FIXTURE SCHEDULE.
	SURFACE OR RECESSED WALL WASHER. SEE LIGHT FIXTURE SCHEDULE.
	WALL MOUNTED LIGHT FIXTURE COORDINATE MOUNTING HEIGHT WITH ARCHITECT. SEE LIGHT FIXTURE SCHEDULE.
	1'X4' SURFACE LED FIXTURE. SEE LIGHT FIXTURE SCHEDULE.
	EMERGENCY FIXTURE WITH 90 MIN BATTERY. 1400 LUMEN BALLAST.
	SURFACE MOUNTED HID LIGHT FIXTURE.
	WALL MOUNTED HID LIGHT FIXTURE. COORDINATE MOUNTING HEIGHT WITH ARCHITECT.
	EXTERIOR POLE FIXTURE. COORDINATE EXACT POLE HEIGHT WITH ARCHITECT.
	CEILING FAN. SEE LIGHT FIXTURE SCHEDULE.
	TIME CLOCK / PHOTOCELL
	METER / METER ABOVE CT CABINET
	KNOX BOX

FIRE ALARM LEGEND

	CEILING/WALL MOUNTED HEAT DETECTOR
	SINGLE STATION 110V COMBINATION CARBON MONOXIDE/SMOKE DETECTOR WITH BATTERY BACKUP, CEILING/WALL MOUNTED
	SINGLE STATION 110V COMBINATION CARBON MONOXIDE/SMOKE DETECTOR WITH VISUAL STROBE WITH BATTERY BACKUP, CEILING/WALL MOUNTED
	SINGLE RECEPTACLE, WALL MOUNTED, 18" AFF UNO.
	CEILING/WALL MOUNTED SYSTEM SMOKE DETECTOR
	SMOKE DETECTOR AIR DUCT MOUNTED
	FIRE ALARM TAMPER, FLOW AND PRESSURE SWITCH RESPECTIVELY (COORDINATE EXACT QUANTITY AND LOCATION WITH SPRINKLER SHOP DRAWINGS)
	FIRE ALARM ADA APPROVED VISUAL STROBE DEVICE, 80" AFF
	FIRE ALARM LOW FREQUENCY SOUNDER/VISUAL STROBE DEVICE, 80" AFF
	FIRE ALARM LOW FREQUENCY SOUNDER DEVICE, 80" AFF
	FIRE ALARM ADA APPROVED PULLSTATION, 48" AFF
	FIRE ALARM ADA APPROVED HORN/STROBE DEVICE, 80" AFF
	CEILING-MOUNTED FIRE ALARM ADA APPROVED HORN/STROBE DEVICE
	CARBON MONXIDE DETECTOR
FACP	FIRE ALARM CONTROL PANEL
FAAP	FIRE ALARM ANNUNCIATOR PANEL

LOW VOLTAGE LEGEND

	WALL MOUNTED VOICE/DATA OUTLET, 18"AFF - 3/4" CONDUIT WITH PULLWIRE TO ABOVE ACCESSIBLE CEILING OR TO TELEPHONE BACKBOARD.
	WALL MOUNTED TELEPHONE OUTLET 18"AFF, PROVIDE (1) CAT5E CABLE AND TERMINATION PLATE.
	WALL MOUNTED DATA OUTLET, 18" AFF - 3/4" CONDUIT WITH PULLWIRE TO ABOVE ACCESSIBLE CEILING OR TO TELEPHONE BACKBOARD
	ABOVE COUNTER WALL MOUNTED DATA OUTLET, 8" ACT, U.N.O. - 3/4" CONDUIT WITH PULLWIRE TO ABOVE ACCESSIBLE CEILING OR TO TELEPHONE BACKBOARD
	ABOVE COUNTER WALL MOUNTED DATA/TELEPHONE OUTLET, 8" ACT, U.N.O - 3/4" CONDUIT WITH PULLWIRE TO ABOVE ACCESSIBLE CEILING OR TO TELEPHONE BACKBOARD
	ABOVE COUNTER WALL MOUNTED DUAL JACK TELEPHONE OUTLET, 8" ACT, U.NO. - 3/4" CONDUIT WITH PULLWIRE TO ABOVE ACCESSIBLE CEILING OR TO TELEPHONE BACKBOARD
	VOICE/DATA, IN FLUSH FLOOR BOX, PROVIDE 1" CONDUIT MINIMUM UNO IN SLAB TO NEAREST POINT OF ACCESS, AS SHOWN ON DRAWINGS.
	TV OUTLET WITH ONE (1) COAX F TYPE CONNECTOR. PROVIDE 3/4" C AND ONE RG6 CABLE FROM OUTLET TO NEAREST CATV BACKBOARD. MOUNT 18" AFF UNO.
	SINGLE GANG BOX FOR CARD READER, 48" AFF. PROVIDE 3/4" CONDUIT TO TERMINATION LOCATION DETERMINED BY OWNER.
	SINGLE GANG BOX FOR CALL BOX, 60" AFF
	MAGNETIC DOOR HOLDER
	DUPLEX RECEPTACLE, TV COAX, AND VOICE/DATA FLUSH IN FLOOR, IN THREE-GANG CAST IRON FLOOR BOX PROVIDED BY CONTRACTOR. PROVIDE 1" CONDUIT MINIMUM UNO IN SLAB TO NEAREST POINT OF ACCESS, AS SHOWN ON DRAWINGS.
ACS	ACS - CARD READER (MULLION)
CR	ACS - CARD READER
PB	PUSH BUTTON WITH REMOTE RELEASE
PB ADA	ADA PUSH BUTTON
KNX	DH - AUTOMATIC DOOR OPENER
KP	IDS - KEYPAD
	VIDEO - CAMERA
VIDEO	VIDEO - DOOR STATION INTERCOM
IC	INTERCOM DEVICE

CODE COMPLIANCE

THESE PLANS WERE PREPARED AND SHALL COMPLY WITH THE BUILDING

INTERNATIONAL BUILDING CODE, 2018 EDITION, WITH GEORGIA AMENDMENTS (2020), (2022)
INTERNATIONAL ENERGY CONSERVATION CODE, 2015 EDITION
INTERNATIONAL FIRE CODE, 2018 EDITION
NATIONAL ELECTRICAL CODE, 2023 EDITION, WITH GEORGIA AMENDMENTS

ABBREVIATIONS

ACT	ABOVE COUNTERTOP OR BACKSPLASH	FACP	FIRE ALARM CONTROL PANEL
AC	ALTERNATING CURRENT	FIX	FIXTURE
AL	ALUMINUM	FL	FLOOR
AMP	AMPERES	FU	FUSED
AFF/AFG	ABOVE FINISHED FLOOR/GRADE	GFCI/GFI	GROUND FAULT CIRCUIT INTERRUPTER
AHU	AIR HANDLING UNIT	GND/G	GROUND
APPROX	APPROXIMATELY	H.O.A.	HAND-OFF-AUTOMATIC
ARCH	ARCHITECTURAL	HP	HORSEPOWER
AWG	AMERICAN WIRE GAUGE	IEEE	INSTITUTE OF ELECTRICAL AND ELECTRONIC ENGINEERS
BD	BOARD	JB	JUNCTION BOX
BLDG	BUILDING	KVA	KILOVOLT-AMPERE
CAB	CABINET	KW	KILOWATT
CAP	CAPACITY	KAIC	KILO-AMPERE INTERRUPTING CAPACITY
CATV	CABLE TELEVISION	MCA	MINIMUM CIRCUIT AMPACITY
CBB	CABLE TELEVISION BACKBOARD	MCB	MAIN CIRCUIT BREAKER
CKT	CIRCUIT	MECH	MECHANICAL
CLG	CEILING	MISC	MISCELLANEOUS
C/B	CIRCUIT BREAKER	MTR	MOTOR
C/L	CENTER LINE	MTD	MOUNTED
COL	COLUMN	MLO	MAIN LUG ONLY
COND/C	CONDUIT	MOCP	MAXIMUM OVERCURRENT PROTECTION
CONN	CONNECTION	M.O.D.	MOTOR OPERATED DAMPER
CONT	CONTINUATION	MRS	MOTOR RATED SWITCH
C&P	CORD AND PLUG	NEC	NATIONAL ELECTRICAL CODE
CPT	CONTROL POWER TRANSFORMER	NES	NASHVILLE ELECTRIC SERVICE
CT	CURRENT TRANSFORMER	NF	NONFUSED
CU	COPPER	NL	NIGHT LIGHT
DET	DETAIL	NO.	NUMBER
DF/EDF	ELECTRICAL DRINKING FOUNTAIN	NTS	NOT TO SCALE
DN	DOWN	P.I.V.	POST INDICATOR VALVE
DS	DISCONNECT SWITCH	PNL	PANEL
DWG	DRAWING	PVC	POLYVINYL CHLORIDE CONDUIT
EA	EACH	RTU	ROOF TOP UNIT
EC	ELECTRICAL CONTRACTOR	SH	SHEET
EF	EXHAUST FAN	SW	SWITCH
ELEC	ELECTRIC	TR	TRANSFORMER
EQ	EQUIPMENT	TBB	TELEPHONE BACKBOARD
EX	EXISTING	TELE	TELEPHONE
FA	FIRE ALARM	UNO	UNLESS NOTED OTHERWISE
FSD	FIRE SMOKE DAMPER	WP	WEATHERPROOF

SHEET LIST - ELECTRICAL

NUMBER	NAME
E0.01	ELECTRICAL GENERAL NOTES, LEGEND AND DESIGN INTENT
E0.02A	HILTI FIRE STOP DETAILS
E0.02B	HILTI FIRE STOP DETAILS
E0.02C	HILTI FIRE STOP DETAILS
E0.02D	HILTI FIRE STOP DETAILS
E0.02E	HILTI FIRE STOP DETAILS
E0.03	LIGHTING FIXTURE SCHEDULE
E1.10	ELECTRICAL FLOOR POWER PLAN
E1.20	ELECTRICAL ROOF POWER PLAN
E1.30	ELECTRICAL LIGHTING CEILING PLAN
E6.00	ELECTRICAL RISER DIAGRAM

ELECTRICAL NOTES

1. ALL WORK THIS DIVISION SHALL COMPLY WITH ALL BUILDING CODES, LAWS, REGULATIONS, ORDINANCES, AND THE REQUIREMENTS OF 2023 NATIONAL ELECTRICAL CODE WITH GA AMENDMENTS.
2. THE CONTRACTOR SHALL KEEP A RECORD OF THE CHANGES WHICH ARE IN CONFLICT WITH THESE DRAWINGS AND SPECIFICATIONS. AT THE COMPLETION OF HIS/HER WORK HE/SHE SHALL SUBMIT "AS BUILT" PRINTS TO THE OWNER.
3. ALL SYSTEMS, EQUIPMENT, COMPONENTS, WORK, ETC. PROVIDED UNDER THIS DIVISION SHALL BE COVERED BY A ONE YEAR GUARANTEE STARTING AT THE TIME OF FINAL ACCEPTANCE OF THE WORK BY THE OWNER. ANY DEFECTS IN THE WORK, SYSTEMS, EQUIPMENT, OR COMPONENTS FOUND DURING THIS YEAR SHALL BE CORRECTED AT NO CHARGE. THE GUARANTEE SHALL INCLUDE PROVIDING ALL NECESSARY CUTTING, PATCHWORK, REPAINTING, ETC. TO MAKE THE WORK COMPLETE AND NEW.
4. ALL BRANCH CIRCUIT CONDUCTORS SHALL BE COPPER WITH TYPE "THW" OR "THHN" INSULATION AND THE MINIMUM WIRE SIZE SHALL BE #14 A.W.G. FOR 15A WHERE USED IN RESIDENTIAL/LIVING UNITS AND #12 A.W.G FOR 20A CIRCUITS UNLESS NOTED OTHERWISE, OR NOT ALLOWED BY LOCAL JURISDICTION HAVING AUTHORITY.
5. ALL WORK MUST BE PERFORMED IN A NEAT AND WORKMANLIKE MANNER ACCORDING TO GENERALLY ACCEPTED PRINCIPALS OF FIRST CLASS WORKMANSHIP.
6. ALL PENETRATIONS THRU RATED WALLS, FLOORS AND CEILINGS SHALL BE FIRE STOPPED PER N.E.C. 300.21. ALSO SEE SHEETS E0.02A-E0.02E. FIRE STOPPING SHALL MATCH UL RATING OF WALL, FLOOR, OR CEILING PENETRATED.
7. ALL SWITCHES FOR FANS, LIGHTS, ETC. WHICH ARE SHOWN TO BE MOUNTED IN THE SAME GENERAL AREA SHALL SHARE A MULTI-GANG COVER PLATE AS REQUIRED.
8. COORDINATE RECEPTACLE NEMA TYPE AND VOLTAGE WITH EQUIPMENT.
9. PROVIDE A TYPE WRITTEN DIRECTORY FOR ALL PANELS AND LOAD CENTERS. CORRECTLY LABEL ALL CIRCUITS, SPARES, AND SPACES.
10. LABEL AND IDENTIFY ALL JUNCTION BOXES, WIREWAYS AND MAJOR SWITCHES AT THE TIME OF INSTALLATION. PROVIDE PERMANENT NAMEPLATES/LABELS AS SPECIFIED PRIOR TO FINAL INSPECTION.
11. VERIFY LOCATION OF ALL MOTORS AND EQUIPMENT BEFORE ROUGH-IN.
12. ALL CONDUITS CROSSING EXPANSION JOINTS SHALL HAVE EXPANSION TYPE FITTINGS. WIRING SHALL BE INSTALLED AT DEPTHS BELOW FINISHED GRADE (BELOW SLAB AND SUB-BASE LEVEL) AS PER NEC ARTICLE 300.50.
13. MINIMUM HOMERUN CONDUIT SIZE SHALL BE:
    A. ABOVE GRADE: 1/2"
    B. BELOW GRADE: 3/4"
14. COMMON NEUTRAL MAY BE USED AS PERMITTED BY NEC FOR MULITWIRE BRANCH CIRCUITS. SEPARATE NEUTRAL SHALL BE PROVIDED FOR ALL CIRCUITS CONNECTED TO GROUND FAULT CIRCUIT INTERRUPTER TYPE DEVICES, UNLESS OTHERWISE NOTED. SEPARATE NEUTRAL SHALL BE PROVIDED FOR ALL ARC FAULT CIRCUIT INTERRUPTER CIRCUITS.
15. ALL BRANCH CIRCUITS SHALL INCLUDE A GREEN INSULATED GROUND WIRE, SIZED PER NEC TABLE 250.122 OR AS SHOWN, CONNECTED TO EACH DEVICE AND OUTLET BOX ON THE CIRCUIT AND TO THE PANEL BOARD GROUND BUS. MULTIPLE WIRE BRANCH CIRCUITS WITH COMMON NEUTRAL REQUIRE ONLY ONE GROUND WIRE, UNLESS OTHERWISE NOTED.
16. IN CASES WHERE CONFLICTS OCCUR BETWEEN DRAWINGS AND SPECIFICATION, OR BETWEEN DIFFERENT TRADES. AS WELL AS CASES OF ANY OMISSION OF INFORMATION, NOTIFY THE ARCHITECT AND PROCURE RESOLUTION OF THE CONFLICT OR OMISSION BEFORE PROCEEDING WITH THE INSTALLATION.
17. ALL 15A AND/OR 20A BRANCH RECEPTACLE CIRCUITS FOR 120V, CIRCUITS LONGER THAN 70'-0" SHALL BE MINIMUM #10 AWG, LONGER THAN 150' SHALL BE #8 AWG.
18. THE DRAWINGS INDICATE THE GENERAL ARRANGEMENT AND LOCATION OF ELECTRICAL WORK, DATA PRESENTED ON THE DRAWINGS ARE AS ACCURATE AS PLANNING CAN DETERMINE, BUT FIELD VERIFICATION OF ALL DIMENSIONS, LOCATIONS, LEVELS, ETC., TO SUIT FIELD CONDITION IS REQUIRED. REVIEW ALL ARCHITECTURAL, STRUCTURAL AND MECHANICAL DRAWINGS AND ADJUST ALL WORK TO MEET THE REQUIREMENTS OF CONDITIONS SHOWN.
19. COORDINATE WITH OTHER TRADES SO THAT INSTALLATION OF ELECTRICAL OUTLETS AND EQUIPMENT WILL BE PROPERLY COORDINATED. CHECK CONDUIT, FIXTURE AND OTHER EQUIPMENT LOCATIONS WITH OTHER TRADES TO AVOID CONFLICT WITH THE PIPING DUCT WORK, STEEL PIPING, BEAM, OR OTHER OBSTRUCTIONS.
20. REFER TO ARCHITECTURAL/INTERIOR DESIGNER DRAWINGS FOR EXACT SPECIFICATION, LOCATION AND QUANTITY OF ELECTRICAL DEVICES AND LIGHT FIXTURES.
21. THE GENERAL CONTRACTOR SHALL PROVIDE NOTICE TO THE ARCHITECT/ENGINEER THAT THERE HAS BEEN A FACE-TO-FACE MEETING WITH THE MECHANICAL, PLUMBING, FIRE PROTECTION AND ELECTRICAL SUBCONTRACTORS TO COORDINATE THEIR WORK. THIS MUST BE DONE PRIOR TO ORDERING ANY EQUIPMENT AND SHALL SERVE TO MATCH THE VOLTAGE, PHASE, AMPS, MCA, AND MOCP OF THE EQUIPMENT WITH THE DESIGNED ELECTRICAL CHARACTERISTICS. AFTER THIS MEETING HAS BEEN HELD THE GENERAL CONTRACTOR SHALL PROVIDE NOTICE (IN WRITING) TO THE A/E THAT THIS HAS BEEN DONE AND THERE ARE NO DISCREPANCIES. FAILURE TO MEET DOES NOT ENTITLE CONTRACTOR TO A CHANGE ORDER FOR INCOMPATIBLE EQUIPMENT AND SERVICE CHARACTERISTICS.
22. PROVIDE UNSWITCHED HOT WIRE TO ALL EMERGENCY/EXIT LIGHTING.
23. PROVIDE SEALING OF ALL OUTLET BOXES PER LOCAL FIRE CODE.
24. COMBUSTIBLE MATERIALS ARE NOT ALLOWED WITHIN AREAS WHERE PLENUM AIR SYSTEMS ARE BEING USED.
25. THE CONTRACTOR SHALL PROVIDE AND INSTALL WIRING AND CIRCUIT ALL EQUIPMENT, MOTORS, AND OTHER ITEMS NOT EXPLICITLY SHOWN, BUT INDICATED, IN CONTRACT DOCUMENTS OR IN SPECIFICATIONS. CONTRACTOR SHALL BE RESPONSIBLE FOR COORDINATION OF SAID ITEMS BETWEEN ALL TRADES.
26. NO PIPING, DUCT, OR EQUIPMENT FOREIGN TO THE ELECTRICAL INSTALLATION SHALL BE INSTALLED ABOVE ANY ELECTRICAL PANELBOARD, LOAD CENTER, MOTOR CONTROL CENTER, OR SWITCHBOARD. PER NEC ARTICLE 110.26 (a) (3).
27. THERE SHALL BE NO BACK TO BACK RECEPTACLE WITHIN FIRE RATED WALLS. PROVIDE MINIMUM HORIZONTAL SPACE BETWEEN OUTLETS AT OPPOSITE SIDES OF A FIRE RATED WALL.
28. GFCI RECEPTACLE WITH IN-USE WEATHERPROOF COVER PLATE. IN-USE WEATHERPROOF COVER PLATE SHALL BE: STEEL CITY "WTG100-CV-L" OR APPROVED EQUAL.
29. SEE SHEET E6.00 FOR MECHANICAL EQUIPMENT CONNECTION SCHEDULE.
30. FIRE ALARM SYSTEM PROVIDED BY ELECTRICAL SUBCONTRACTOR PER NFPA 101, NFPA 72 AND IBC.
31. NAME PLATES FOR DISCONNECT SWITCHES SHALL BE PRINTED LABELS.
32. BELOW GRADE RACEWAY INSTALLATIONS - DIRECT BURIAL CONDUIT SHALL BE INSTALLED AT CODE REQUIRED BURIAL DEPTHS
33. RACEWAY INSTALLATIONS WITHIN CONCRETE - CONDUIT SHALL BE RUN FOLLOWING THE MOST DIRECT ROUTE BETWEEN POINTS. CONDUIT SHALL NOT BE INSTALLED WITHIN CONCRETE WHERE THE OUTSIDE DIAMETER IS LARGER THAN 1/3 OF THE SLAB THICKNESS.
34. IN BUILDINGS WITH MULTIPLE SERVICES, PROVIDE A PLAQUE AT EACH ELECTRICAL SERVICE DENOTING THE LOCATION OF ALL OTHER SERVICES WITHIN THE BUILDING.
35. TYPE NM CABLE IS NOT ALLOWED EXPOSED IN HVAC CLOSETS. PROVIDE TYPE MC CABLE OR ROUTE TYPE NM CABLE IN FLEXIBLE METALLIC CONDUIT SO THAT NM CABLE IS NOT EXPOSED IN CLOSET.
36. ALL EXTERIOR ENTRY DOORS SHALL BE EQUIPPED WITH ELECTRIC STRIKE PLATES AND EITHER CARD OR PROXIMITY READERS. COORDINATE LOCATION AND REQUIREMENTS WITH LOW VOLTAGE INSTALLER PRIOR TO BID.
37. PROVIDE OCCUPANCY SENSORS TO CONTROL LIGHTING IN ALL COMMON AREA RESTROOMS, OFFICES, STORAGE ROOMS, AMENTIES,ETC.
38. CONTRACTOR SHALL PROVIDE HOMERUN FROM SWITCH BOX PER NEC 404.2C.
39. CONDUIT FILL PER CODE
40. IT IS THE CONTRACTOR'S RESPONSIBILITY TO COORDINATE LIGHTS, HVAC REGISTERS AND SPRINKLERS. IN ADDITION, THE CONTRACTOR SHALL VERIFY CEILING TYPES PRIOR TO ORDER FIXTURES.
41. ALL LIGHTING FIXTURES SHALL BE SUPPORTED INDEPENDENT OF THE CEILING USING #12 GALVANIZED STEEL WIRES, TWO WIRES AT OPPOSITE CORNERS OF THE FIXTURES.
42. ALL ITEMS ON THE DRAWINGS SHALL BE NEW AND BEAR THE U.L. LABEL.
43. THE CONTRACTOR SHALL COORDINATE THE LOCATION OF THE TRANSFORMER WITH THE LOCAL UTILITY COMPANY. FURTHER HE SHALL OBTAIN A DETAIL OF THE CONCRETE PAD FOR THE TRANSFORMER AND COORDINATE ANY METERING EQUIPMENT TO BE FURNISHED AND SHALL DO SO AT NO ADDITIONAL COST TO THE OWNER.
44. WHERE WALLS ARE FIRE OR SMOKE RATED THE CONTRACTOR SHALL DO HIS INSTALLATION TO PREVENT VIOLATING THE RATING OF THE WALL, THIS MEANS COMPLYING WITH ALL U.L. REGULATIONS.
45. FIRE WALLS SHALL HAVE PUTTY PADS ON METALLIC BOXES UNLESS BOXES ARE RATED FOR RATING OF THE WALL.
46. PROVIDE A GROUND BAR AT EACH TELEPHONE BACKBOARD AND/OR MDF (HUB/ROUTER ROOM) AND TERMINATE USING A TERMINAL STRIP THAT CONTAINS NO LESS THAN TEN (10) PLACES FOR ADDITIONAL WIRES. BOND TO MAIN GROUND (#6 AWG) AT ELEC. RM.
47. DO NOT SCALE DRAWINGS, LOCATION OF EQUIPMENT ARE APPROXIMATE. ALL WORK SHALL BE COORDINATED WITH OTHER TRADES TO PROVIDE PROPER WORKING CLEARANCE.
48. ALL CONDUCTORS FOR EXTERIOR LIGHTING CIRCUITS SHALL BE MINIMUM #10 AWG (UNLESS OTHERWISE NOTED), EXCEPT THE CONDUCTORS FROM THE HANDHOLE UP THE POLE TO THE BALLAST MAY BE #12 AWG.
49. THE CONTRACTOR SHALL MEASURE THE GROUND RESISTANCE, USING THE "FALL OF POTENTIAL METHOD" AND SUBMIT THE RESULTS TO THE A/E VIA EMAIL USING "WORD" SOFTWARE. IF THERE IS DIFFICULTY ACHIEVING 5 OHMS OR LESS THE CONTRACTOR SHALL CONTINUE TO DRIVE GROUND RODS OR ADD A NON TOXIC ENVIRONMENTALLY FRIENDLY MAGNESIUM SULFATE TO ACHIEVE THE 5 OHMS OR LESS TO GROUND. THE GROUNDING INFORMATION SHOULD BE SIGNED BY A TECHNICIAN. THE TYPE OF INSTRUMENT USE TO PERFORM THE TEST SHALL BE INCLUDED IN THE REPORT. THE TEST SHALL NOT BE DONE IF THERE HAD BEEN RAINFALL IN THE PREVIOUS 24 HOUR PERIOD. THIS SHALL BE DONE AT THE BEGINNING OF THE CONSTRUCTION PROCESS AND NOT AT THE END. ALL GROUNDS SHALL BE INTERCONNECTED AT THE MAIN GROUNDING ELECTRODE USING A ERICO MODEL TG8-A16L0BPT MOUNTED ADJACENT TO THE MAIN SERVICE EQUIPMENT OR MAIN SWITCH.
50. COORDINATE LOCATION AND QUANTITY OF FIRE / SMOKE DAMPERS WITH MECHANICAL CONTRACTOR PRIOR TO BID. COORDINATION OF LOCATIONS AND QUANTITIES WILL OVERRIDE LOCATIONS AND QUANTITIES INDICATED ON ELECTRICAL DRAWINGS. PROVIDE A 120V UNSWITCHED CIRCUIT TO EACH FIRE / SMOKE DAMPER. PROVIDE A DUCT MOUNTED SMOKE DETECTOR FOR EACH FIRE / SMOKE DAMPER. CONNECT DUCT MOUNTED SMOKE DETECTOR AND FIRE / SMOKE DAMPER TO FIRE ALARM SYSTEM. A CHANGE ORDER WILL NOT BE ALLOWED FOR LACK OF COORDINATION BETWEEN THE ELECTRICAL AND MECHANICAL CONTRACTOR FOR LOCATION AND QUANTITY OF FIRE / SMOKE DAMPERS.
51. COORDINATE REQUIREMENTS FOR TELEPHONE AND CABLE TELEVISION SERVICES WITH UTILITY PROVIDER PRIOR TO BID. UTILITY COMPANY REQUIREMENTS SHALL OVERRIDE REQUIREMENTS INDICATED HEREIN.

CLAYTON COUNTY LIBRARY SYSTEM

RIVERDALE LIBRARY ADDITION

420 Valley Hill Rd, Riverdale, GA 30274

HAMMOND ENGINEERING, INC
CONSULTING ENGINEERS
6961 PEACHTREE INDUSTRIAL BLVD. #208
NORCROSS, GEORGIA, 30092
TEL: (678)292-6937
NATHANIEL D. HAMMOND P.E.
MECHANICAL/ELECTRICAL ENGINEER
P.E. #047450

© 2025 THESE DOCUMENTS REMAIN THE PROPERTY OF THE ARCHITECT AND MAY NOT BE USED, OR REPRODUCED WITHOUT WRITTEN PERMISSION.

RELEASED FOR CONSTRUCTION

Revisions

No.	Date	Description
	03/19/2025	50% SET
	03/28/2025	100% SET
	03/31/2025	100% SET
	06/10/2025	100% SET

GEORGIA REGISTERED PROFESSIONAL ENGINEER NO. PE047450 NATHANIEL D. HAMMOND

06/10/2025

Gardner Spencer Smith Tench & Jarbeau
A Professional Corporation for the Practice of Architecture
www.gsstj.com

50 Hurt Plaza SW,
Suite 1100
Atlanta, Georgia
30303
404.522.8805
404.521.2118 (F)

PROJECT NO.

24105

SHEET TITLE

ELECTRICAL GENERAL NOTES, LEGEND AND DESIGN INTENT

SHEET NO.

E0.01

HILITI FIRE STOP DETAILS NOTES

1. Refer to architectural specifications for Quality Control requirements, refer to the Quality Control portion of the specification.
2. *Details shown are typical details. If field conditions do not match requirements of typical details, approved alternate details shall be utilized. Field conditions and dimensions need to be verified for compliance with the details, including but not limited to the following:*
   - ** Minimum and maximum Width of Joints*
   - ** Type and thickness of fire-rated construction. The minimum assembly rating of the firestop assembly shall meet or exceed the highest rating of the adjacent construction.*
3. *If alternate details matching the field conditions are not available, manufacturer's engineering judgment drawings are acceptable. Drawings shall follow the International Firestop Council (IFC) Guidelines for*

   Evaluating Firestop Systems Engineering Judgments.
4. *References:*

   ** Underwriter's Laboratories Fire Resistance Directory, Volume 2*
   ** NFPA 101 Life Safety Code*
   ** All governing local and regional building codes*
5. *Firestop System installation must meet requirements of ASTM E-814 (UL 1479) tested assemblies that provide a fire rating equal to that of construction being penetrated.*
6. *All rated through-penetrations shall be prominently labeled with the following information:*

   ** ATTENTION: Fire Rated Assembly*
   ** UL System #*
   ** Product(s) used*
   ** Hourly Rating (F-Rating)*
   ** Installation Date*

CAJ 3095

System No. C-AJ-3095

Classified by Underwriters Laboratories, Inc. to UL 1479 and CAN/ULC-S115

ANSI/UL1479 (ASTM E814)	CAN/ULC S115
F Rating — 3 Hr	F Rating — 3 Hr
T Rating — 0, 1/2 and 3/4 Hr (See Item 3)	FT Ratings — 0, 1/2 and 3/4 Hr (See Item 3)
	FH Rating — 3 Hr
	FTH Ratings — 0, 1/2 and 3/4 Hr (See Item 3)

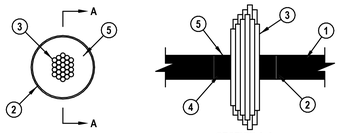

SECTION A-A

1. Floor or Wall Assembly — Min 2-1/2 in. (64 mm) thick reinforced lightweight or normal weight (100-150 pcf or 1600 2400 kg/m3) concrete floor or min 3 in. (76 mm) thick reinforced lightweight or normal weight concrete wall. Wall may also be constructed of any UL Classified Concrete Blocks*. Max diam of opening is 6 in. (152 mm).
   See Concrete Blocks (CAZT) category in the Fire Resistance Directory for names of manufacturers.
2. Sleeve — (Optional) — Nom 6 in. (152 mm) diam (or smaller) Schedule 10 (or heavier) steel pipe cast or grouted into floor or wall assembly, flush with floor or wall surfaces or extending a max 3 in. (76 mm) above the floor or both surfaces of the wall. If the steel sleeve extends above the floor or both surfaces of the wall, the T Rating of the firestop system is 0 Hr.
3. Cables — Aggregate cross-sectional area of cables in opening to be min 25 percent to max 45 percent of the aggregate cross-sectional area of the opening. Cables to be rigidly supported on both sides of floor or wall assembly. Any combination of the following types and sizes of metallic conductor or fiber optic cable may be used:
   - A. Max 500 kcmil single copper connector power cable with thermoplastic insulation and polyvinyl chloride (PVC) jacket. When single copper conductor power cable is used, T, FT and FTH Rating is 0 hr.
   - B. Max 350 kcmil single conductor power cables with either aluminum or copper conductors and cross-linked polyethylene (XPLE) insulation. When single aluminum conductor power cable is used, T Rating is 0 hr. When single copper conductor power cable is used, T, FT and FTH Rating is 1/2 hr.
   - C. Max 300 pair No. 24 AWG copper conductor telecommunication cables with polyvinyl chloride (PVC) insulation and jacket material. When telecommunication cable is used, T, FT and FTH Rating is 0 hr.
   - D. Max three copper connector No. 6 AWG cable with polyvinyl chloride (PVC) insulation and jacket material. When multi-connector power cable is used, T Rating is 0 hr.
   - E. Max 7/C copper conductor No. 12 AWG multiconductor power and control cables with PVC or cross-linked polyethylene (XLPE) insulation and PVC jacket. When multiconductor power and control cable is used, T, FT and FTH Rating is 3/4 hr.
   - F. Multiple fiber optical communication cables jacketed with PVC and having a max outside diam of 1/2 in. When fiber optic cable is used, T, FT and FTH Rating is 3/4 hr.
   - G. Max 3/C copper conductor No. 12 AWG with Bare aluminum ground, polyvinyl chloride (PVC) insulated steel, Metal-clad cable+. When MC cable is used, T, FT and FTH Rating is 0 hr.

   AFC CABLE SYSTEMS INC

Hilti Firestop Systems

Reproduced by HILTI, Inc. Courtesy of Underwriters Laboratories, Inc. January 14, 2015

Page: 1 of 2

CAJ 3095

System No. C-AJ-3095

4. H. Max 3/C with ground 2/0 AWG copper conductor SER cable with cross-linked polyethylene (XLPE) insulation and polyvinyl chloride (PVC) jacket. When SER cable is used, T, FT and FTH Rating is 0 hr.
   - I. Max RG/U coaxial cable with polyethylene (PE) insulation and polyvinyl chloride (PVC) jacket having a max outside diameter of ½ in. When coaxial cable is used, T Rating is 0 hr.
   - J. Fire Resistive Cables* - Max 1-1/4 in. (32 mm) diam single conductor or multi conductor Type MI cable. A min 1/8 in. (3 mm) separation shall be maintained between MI cables and any other type of cable. When Fire Resistive Cables *are used, T, FT and FTH Rating is 0 hr.
   - K. Through Penetrating Product* — Any Cables, Metal-Clad Cable+ or Armored Cable+ currently Classified under the Through Penetrating Products category.

   See Through Penetrating Product (XHLY) category in the Fire Resistance Directory for names of manufacturers.
4. Packing Material — Min 2 in. (51 mm) thickness of min 4 pcf (64 kg/m3) mineral wool batt insulation firmly packed into opening as a permanent form. Packing material to be recessed 1/2 in. (13 mm) from top surface of floor or from both surfaces of wall to accommodate the fill material. If the steel sleeve (Item 2) extends above the top of the floor, the packing material shall be flush with the bottom surface of the floor.
5. Fill, Void or Cavity Material* — Sealant — Min 1/2 in. (13 mm) thickness of fill material applied within the annulus, flush with top surface of floor or with both surfaces of wall.

   HILTI CONSTRUCTION CHEMICALS, DIV OF HILTI INC — FS-One Sealant or FS-ONE MAX Intumescent Sealant

* Indicates such products shall bear the UL or cUL Certification Mark for jurisdictions employing the UL or cUL Certification (such as Canada), respectively.

Hilti Firestop Systems

Reproduced by HILTI, Inc. Courtesy of Underwriters Laboratories, Inc. January 14, 2015

Page: 2 of 2

CABLE THROUGH RATED CONCRETE FLOOR/WALL ASSEMBLY | N.T.S. | 4

FC 2030

System No. F-C-2030

F Ratings — 1 and 2 Hr (See tem 1)
T Ratings — 0, 3/4, 1, 1-1/2 and 2 Hr (See Item 3)

Classified by Underwriters Laboratories, Inc. to UL 1479

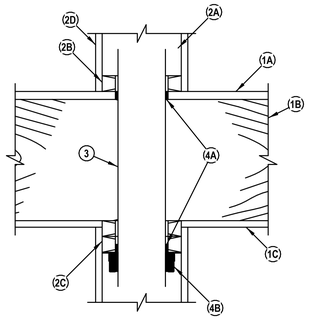

System tested with a pressure differential of 2.5 Pa between the exposed and the unexposed surfaces with the higher pressure on the exposed side.

1. Floor-Ceiling Assembly — The 1 or 2 hr fire-rated solid or trussed lumber joist floor-ceiling assembly shall be constructed of the materials and in the manner specified in the individual L500 Series Floor-Ceiling Designs in the UL Fire Resistance Directory. The F Rating of the firestop system is equal to the rating of the floor-ceiling and wall assemblies. The general construction features of the floor-ceiling assembly are summarized below:
   - A. Flooring System — Lumber or plywood subfloor with finish floor of lumber, plywood or Floor Topping Mixture* as specified in the individual Floor-Ceiling Design. Diam of opening shall be 1 in. (25 mm) larger than the nom diam of through-penetrant (Item 3).
   - B. Joists — Nom 10 in. (254 mm) deep (or deeper) lumber, steel or combination lumber and steel joists, trusses or Structural Wood Members* with bridging as required and with end firestopped.
   - C. Gypsum Board* — Thickness, type, number of layers and fasteners shall be as specified in the individual Floor-Ceiling Design. Diam of opening shall be 1 in. (25 mm) larger than the nom diam of through-penetrant (Item 3).
   - D. Furring Channels — (Not Shown) (As required) - Resilient galvanized steel furring installed in accordance with the manner specified in the individual L500 Series Designs in the Fire Resistance Directory.

Hilti Firestop Systems

Reproduced by HILTI, Inc. Courtesy of Underwriters Laboratories, Inc. April 06, 2018

Page: 1 of 2

FC 2030

System No. F-C-2030

2. Chase Wall — (Optional) - The through penetrant (Item 3) may be routed through a fire-rated or non-rated single, double or staggered wood stud/gypsum wallboard chase wall. The chase wall shall be constructed to include the following construction features:
   - A. Studs — Nom 2 by 6 in. (51 by 152 mm) or double nom 2 by 4 in. (51 by 102 mm) lumber studs.
   - B. Sole Plate — Nom 2 by 6 in. (51 by 152 mm) (or larger) or parallel 2 by 4 in. (51 by 102 mm) lumber plates, tightly butted. Diam of opening shall be 1 in. (25 mm) larger than the nom diam of through-penetrant (Item 3).
   - C. Top Plate — The double top plate shall consist of two nom 2 by 6 in. (51 by 152 mm) (or larger) or parallel 2 by 4 in. (51 by 102 mm) lumber plates, tightly butted. Diam of opening shall be 1 in. (25 mm) larger than the nom diam of through-penetrant (Item 3).
   - D. Gypsum Board* — One or two layers of min 1/2 in. (13 mm) gypsum board.
3. Through-Penetrants — One nom 1-1/2 in. (38 mm), 2 in. (51 mm), 3 in. (76 mm) or 4 in. (102 mm) diam nonmetallic pipe to be installed within the firestop system. Diam of opening through flooring system and through sole and top plates of chase wall to be max 2-1/8 in. (54 mm), 2-5/8 in. (67 mm), 4 in. (102 mm) or 5 in. (127 mm) for nom 1-1/2 in. (38 mm), 2 in. (51 mm), 3 in. (76 mm) or 4 in. (102 mm) diam nonmetallic pipe sizes, respectively. Pipe to be rigidly supported on both sides of the floor-ceiling assembly. The T Rating is dependent on the size of the through-penetrant. For 2 hr rated assemblies, the T Rating is 2 hr for 1-1/2 in. (38 mm) diam (and smaller) pipes and 1-1/2 hr for pipes greater than 1-1/2 in. (38 mm) diam. For 1 hr rated assemblies, the T rating is 1 hr for 1-1/2 in. (38 mm) diam (and smaller) pipes, 3/4 hr for 2 in. (51 mm) diam pipes and 0 hr for pipes greater than 2 in. (51 mm) diam. The following types of nonmetallic pipes may be used:
   - A. Polyvinyl Chloride (PVC) Pipe — Schedule 40 solid-core or cellular core PVC pipe for use in closed (process or supply) or vented (drain, waste or vent) piping system.
   - B. Chlorinated Polyvinyl Chloride (CPVC) Pipe — SDR17 CPVC pipe for use in closed (process or supply) or vented (drain, waste or vent) piping systems.
   - C. Acrylonitrile Butadiene Styrene (ABS) pipe — Schedule 40 solid-core or cellular core ABS pipe for use in closed (process or supply) or vented (drain, waste or vent) piping systems.
   - D. Flame Retardant Polypropylene(FRPP) Pipe — Schedule 40 FRPP pipe for use in closed (process or supply) or vented (drain, waste or vent) piping system.
4. Firestop System — The details of the firestop system shall be as follows:
   - A. Fill, Void or Cavity Material* — Sealant — Min 3/4 in. (19 mm) thickness of fill material to be installed within the annular space between the pipe and the flooring (Item 1A) or sole plate. Min 5/8 in. (16 mm) thickness applied within the annular space, flush with the bottom surface of ceiling or lower top plate.

   HILTI CONSTRUCTION CHEMICALS, DIV OF HILTI INC — FS-ONE Sealantor FS-ONE MAX Intumescent Sealant.
   - B. Firestop Device* — Firestop Collar — Firestop collar shall be installed in accordance with the accompanying installation instructions. Collar to be installed and latched around the pipe and secured to underside of ceiling or chase wall top plate (Item 2C) using the anchor hooks provided with the collar. (Minimum 2 anchor hooks for 1-1/2 (38 mm) and 2 in. (51 mm) diam pipes and 3 anchor hooks for 3 in. (76 mm) diam pipes). The anchor hooks are to be secured to the ceiling with min 3/16 in. (5 mm) diam steel toggler bolts or to the chase wall top plate with min No. 12 by min 1 in. (25 mm) long steel wood screws in conjunction with steel washers.

   HILTI CONSTRUCTION CHEMICALS, DIV OF HILTI INC — CP 643 50/1.5"N, CP643 63/2"N, CP 643 90/3"N or CP643 110/4"N Firestop Collar

* Indicates such products shall bear the UL or cUL Certification Mark for jurisdictions employing the UL or cUL Certification (such as Canada), respectively.

Hilti Firestop Systems

Reproduced by HILTI, Inc. Courtesy of Underwriters Laboratories, Inc. April 06, 2018

Page: 2 of 2

NON-METTALLIC CONDUIT THROUGH RATED WOODEN FLOOR-CEILING ASSEMBLY | N.T.S. | 2

CAJ 1226

System No. C-AJ-1226

Classified by Underwriters Laboratories, Inc. to UL 1479 and CAN/ULC-S115

ANSI/UL1479 (ASTM E814)	CAN/ULC S115
F Rating — 3 Hr	F Rating — 3 Hr
T Rating — 0 Hr	FT Rating — 0 Hr
L Rating At Ambient — Less Than 1 CFM/sq ft	FH Rating — 3 Hr
L Rating At 400 F — 4 CFM/sq ft	FTH Rating — 0 Hr
	L Rating At Ambient — Less Than 1 CFM/sq ft
	L Rating At 400 F — 4 CFM/sq ft

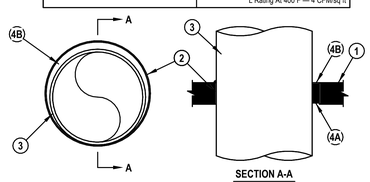

SECTION A-A

1. Floor or Wall Assembly — Min 4-1/2 in. (114 mm) thick reinforced lightweight or normal weight (100-150 pcf or 1600-2400 kg/m³) concrete. Wall may also be constructed of any UL Classified Concrete Blocks*. Max diam of opening is 32 in. (813 mm).
2. Metallic Sleeve — (Optional) Nom 32 in. (813 mm) diam (or smaller) Schedule 40 (or heavier) steel sleeve cast or grouted into floor or wall assembly, flush with floor or wall surfaces or extending a max of 3 in. (76 mm) above floor or beyond both surfaces of wall.

2A. Sheet Metal Sleeve — (Optional) Max 6 in. (152 mm) diam, min 26 ga. galv steel provided with a 26 ga galv steel square flange spot welded to the sleeve at approx mid-height, or flush with bottom of sleeve in floors, and sized to be a min of 2 in. (51 mm) larger than the sleeve diam. The sleeve is to be cast in place and may extend a max of 4 in. (102 mm) below the bottom of the deck and a max of 1 in. (25 mm) above the top surface of the concrete floor.

2B. Sheet Metal Sleeve — (Optional) - Max 12 in. (305 mm) diam, min 24 ga galv steel provided with a 24 ga galv steel square flange spot welded to the sleeve at approx mid-height, or flush with bottom of sleeve in floors, and sized to be a min of 2 in. (51 mm) larger than the sleeve diam. The sleeve is to be cast in place and may extend a max of 4 in. (102 mm) below the bottom of the deck and a max of 1 in. (25 mm) above the top surface of the concrete floor.

3. Through-Penetrant — One metallic pipe, tube or conduit to be installed either concentrically or eccentrically within the firestop system. The annular space between penetrant and periphery of opening shall be min 0 in. (point contact) to max 1-7/8 in. (48 mm). Penetrant may be installed with continuous point contact. Penetrant to be rigidly supported on both sides of floor or wall assembly. The following types and sizes of metallic penetrants may be used:
   - A. Steel Pipe — Nom 30 in. (762 mm) diam (or smaller) Schedule 10 (or heavier) steel pipe.
   - B. Iron Pipe — Nom 30 in. (762 mm) diam (or smaller) cast or ductile iron pipe.
   - C. Copper Pipe — Nom 6 in. (152 mm) diam (or smaller) Regular (or heavier) copper pipe.
   - D. Copper Tubing — Nom 6 in. (152 mm) diam (or smaller) Type L (or heavier) copper tubing.
   - E. Conduit — Nom 6 in. (152 mm) diam (or smaller) steel conduit.
   - F. Conduit — Nom 4 in. (102 mm) diam (or smaller) steel electrical metallic tubing (EMT).

Hilti Firestop Systems

Reproduced by HILTI, Inc. Courtesy of Underwriters Laboratories, Inc. January 07, 2015

Page: 1 of 2

CAJ 1226

System No. C-AJ-1226

4. Firestop System — The firestop system shall consist of the following:
   - A. Packing Material — Min 4 in. (102 mm) thickness of min 4 pcf (64 kg/m³) mineral wool batt insulation firmly packed into opening as a permanent form. Packing material to be recessed from top surface of floor or sleeve or from both surfaces of wall or sleeve as required to accommodate the required thickness of fill material.
   - B. Fill, Void or Cavity Material* — Sealant — Min 1/4 in. (6 mm) thickness of fill material applied within the annulus, flush with top surface of floor or sleeve or with both surfaces of wall or sleeve. At the point or continuous contact locations between penetrant and concrete or sleeve, a min 1/4 in. (6 mm) diam bead of fill material shall be applied at the concrete or sleeve/ pipe penetrant interface on the top surface of floor and on both surfaces of wall.

   HILTI CONSTRUCTION CHEMICALS, DIV OF HILTI INC — FS-One Sealant or FS-ONE MAX Intumescent Sealant

* Indicates such products shall bear the UL or cUL Certification Mark for jurisdictions employing the UL or cUL Certification (such as Canada), respectively.

Hilti Firestop Systems

Reproduced by HILTI, Inc. Courtesy of Underwriters Laboratories, Inc. January 07, 2015

Page: 2 of 2

METAL CONDUIT THROUGH RATED CONCRETE FLOOR/WALL ASSEMBLY | N.T.S. | 3

FA 3007

System No. F-A-3007

Classified by Underwriters Laboratories, Inc. to UL 1479 and CAN/ULC-S115

ANSI/UL1479 (ASTM E814)	CAN/ULC S115
F Rating — 3 Hr	F Rating — 3 Hr
T Rating — 0, 1/4, 1/2 Hr (See Items 3 and 4)	FT Rating — 0, 1/4, 1/2 Hr (See Items 3 and 4)
	FH Rating — 3 Hr
	FTH Rating — 0, 1/4, 1/2 Hr (See Items 3 and 4)

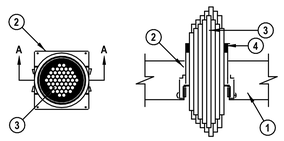

SECTION A-A

1. Floor Assembly — Min 4-1/2 in. (114 mm) thick reinforced lightweight or normal weight (100-150 pcf or 1600-2400 kg/m3) concrete.

1A. Floor Assembly - (Optional - Not Shown) — The fire rated unprotected concrete and steel floor assembly shall be constructed of the materials and in the manner specified in the individual D900 Series designs in the UL Fire Resistance Directory and as summarized below:
   - A. Concrete — Min 4-1/2 in. (114 mm) thick reinforced lightweight or normal weight (100-150 pcf or 1600-2400 kg/m3) concrete.
   - B. Steel Floor and Form Units* — Composite or non-composite max 3 in. (76 mm) deep galv steel fluted units as specified in the individual Floor-Ceiling Design.
2. Firestop Device* — Cast in place firestop device permanently embedded during concrete placement in accordance with accompanying installation instructions.

   HILTI CONSTRUCTION CHEMICALS, DIV OF HILTI INC — CP 680-75/2.5"N, CP 680-110/4"N, CP 680-160/6"N, CP682-72/2.5", CP682-110/4", CP 680-M 2", CP 680-M 3", CP 680-M 4", CP 680-P 2", CP 680-P 3", CP 680-P 4", CP 680-P 6", CP 680-PX 2", CP 680-PX 3"
3. Cables — Cables to be rigidly supported on both sides of the assembly. Any combination of the following types and sizes of copper conductor cables may be used:
   - A. Max 1/C 750 kcmil (or smaller) copper conductor cable with polyvinyl chloride (PVC) insulation and jacket.
   - B. Max 7/C No. 12 AWG with polyvinyl chloride (PVC) insulation and jacket.
   - C. Max 300 pair No. 24 AWG telephone cable with PVC insulation and jacket.
   - D. Multiple fiber optical communication cable jacketed with PVC and having a max OD of 1/2 in. (13 mm).
   - E. Max 3/C No. 12 AWG with ground with polyvinyl chloride jacketed steel clad Type MC cable.

Hilti Firestop Systems

Reproduced by HILTI, Inc. Courtesy of Underwriters Laboratories, Inc. June 29, 2015

Page: 1 of 2

FA 3007

System No. F-A-3007

The firestop device and max cable bundle diameter shall be sized as follows:

Max Bundle Diameter	Firestop Device	T Rating-Hr
2 in. (51 mm)	CP 680-75/2.5"N, CP 682-75/2.5"	1/4
	CP 680-M 2", CP 680-P 2", CP 680-PX 2"	
3 in. (76 mm)	CP 680-75/2.5"N, CP 682-75/2.5"	1/2
	CP 680-M 3", CP 680-P 3", CP 680-PX 3",	
4-1/2 in. (114 mm)	CP 680-110/4"N, CP 682-110/4"	1/2
	CP 680-M 4", CP 680-P 4"	
6-1/2 in. (165 mm)	CP 680-160/6"N	0
	CP 680-P 6"	

4. Fill, Void or Cavity Material* - Putty — Min 1 in.(25 mm) thickness of fill material applied within annulus flush with top surface of device. Fill material is optional for 2-1/2 (64 mm) diam (or larger) cable bundle installed in 3 in. device and 3 in. (76 mm) diam (or larger) cable bundle installed in 4 in. device and 2 in. (51 mm) diam (or larger) cable bundle installed in 2 in. or 2.5 in. device. The T Rating for the firestop system is 1/4 hr when fill material or packing material (Item 4 or 4A) is not used.

   HILTI CONSTRUCTION CHEMICALS, DIV OF HILTI INC — CP 618 Firestop Putty Stick

4A. Packing Material (Not Shown) — As an alternate to Item 4, min 2 in. thickness of min 4 pcf (64 kg/m3) mineral wool insulation firmly packed to the fullest extent possible within annulus flush with top surface of device.

* Indicates such products shall bear the UL or cUL Certification Mark for jurisdictions employing the UL or cUL Certification (such as Canada), respectively.

Hilti Firestop Systems

Reproduced by HILTI, Inc. Courtesy of Underwriters Laboratories, Inc. June 29, 2015

Page: 2 of 2

CABLE THROUGH RATED CONCRETE FLOOR ASSEMBLY | N.T.S. | 1

CLAYTON COUNTY LIBRARY SYSTEM

RIVERDALE LIBRARY ADDITION

420 Valley Hill Rd, Riverdale, GA 30274

HAMMOND ENGINEERING, INC
CONSULTING ENGINEERS
6961 PEACHTREE INDUSTRIAL BLVD, #208
NORCROSS, GEORGIA, 30092
TEL: (678)292-6937
NATHANIEL D. HAMMOND P.E.
MECHANICAL/ELECTRICAL ENGINEER
P.E. #047450

© 2025 - THESE DOCUMENTS REMAIN THE PROPERTY OF THE ARCHITECT AND MAY NOT BE USED, OR REPRODUCED WITHOUT WRITTEN PERMISSION.

RELEASED FOR CONSTRUCTION

Revisions

No.	Date	Description
	03/19/2025	50% SET
	03/28/2025	100% SET
	03/31/2025	100% SET
	06/10/2025	100% SET

GEORGIA REGISTERED PROFESSIONAL ENGINEER NATHANIEL D. HAMMOND

06/10/2025

Gardner Spencer Smith Tench & Jarbeau
A Professional Corporation for the Practice of Architecture
www.gsstj.com

50 Hurt Plaza SW, Suite 1100
Atlanta, Georgia 30303
404.522.8805
404.521.2118 (F)

PROJECT NO.

24105

SHEET TITLE

HILTI FIRE STOP DETAILS

SHEET NO.

E0.02A

System No. W-L-1054

CLASSIFIED C UL US
Classified by Underwriters Laboratories, Inc. to UL 1479 and CAN/ULC-S115

ANSI/UL1479 (ASTM E814)	CAN/ULC S115
F Ratings —1 and 2 Hr (See Items 1 and 3)	F Ratings — 1 and 2 Hr (See Items 1 and 3)
T Rating — 0 Hr	FT Rating — 0 Hr
L Rating at Ambient — Less Than 1 CFM/sq ft	FH Ratings —1 and 2 Hr (See Items 1 and 3)
L Rating at 400 F — Less Than 1 CFM/sq ft	FTH Rating — 0 Hr
	L Rating at Ambient — Less Than 1 CFM/sq ft
	L Rating at 400 F — Less Than 1 CFM/sq ft

WL 1054

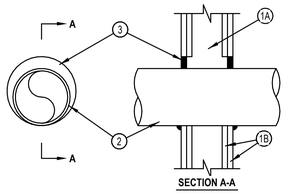

SECTION A-A

1. Wall Assembly — The 1 or 2 hr fire-rated gypsum wallboard/stud wall assembly shall be constructed of the materials and in the manner specified in the individual U300 or U400 Series Wall and Partition Designs in the UL Fire Resistance Directory and shall include the following construction features:
   A. Studs — Wall framing may consist of either wood studs or steel channel studs. Wood studs to consist of nom 2 by 4 in. (51 by 102 mm) lumber spaced 16 in. (406 mm) OC. Steel studs to be min 2-1/2 in. (64 mm) wide and spaced max 24 in. (610 mm) OC. When steel studs are used and the diam of opening exceeds the width of stud cavity, the opening shall be framed on all sides using lengths of steel stud installed between the vertical studs and screw-attached to the steel studs at each end. The framed opening in the wall shall be 4 to 6 in. (102 to 152 mm) wider and 4 to 6 in. (102 to 152 mm) higher than the diam of the penetrating item such that, when the penetrating item is installed in the opening, a 2 to 3 in. (51 to 76 mm) clearance is present between the penetrating item and the framing on all four sides.
   B. Gypsum Board* — 5/8 in. (16 mm) thick, 4 ft (122 cm) wide with square or tapered edges. The gypsum board type, thickness, number of layers, fastener type and sheet orientation shall be as specified in the individual U300 or U400 Series Design in the UL Fire Resistance Directory. Max diam of opening is 32-1/4 in. (819 mm) for steel stud walls. Max diam of opening is 14-1/2 in. (368 mm) for wood stud walls.

The F and FH Ratings of the firestop system are equal to the fire rating of the wall assembly.

Hilti Firestop Systems

Reproduced by HILTI, Inc. Courtesy of Underwriters Laboratories, Inc. October 14, 2015

Page: 1 of 2

System No. W-L-1054

WL 1054

2. Through-Penetrants — One metallic pipe, conduit or tubing to be installed either concentrically or eccentrically within the firestop system. The annular space shall be min 0 in. to max 2-1/4 in. (57 mm). Pipe may be installed with continuous point contact. Pipe, conduit or tubing to be rigidly supported on both sides of wall assembly. The following types and sizes of metallic pipes, conduits or tubing may be used:
   A. Steel Pipe — Nom 30 in. (762 mm) diam (or smaller) Schedule 10 (or heavier) steel pipe.
   B. Iron Pipe — Nom 30 in. (762 mm) diam (or smaller) cast or ductile iron pipe.
   C. Conduit — Nom 4 in. (102 mm) diam (or smaller) steel electrical metallic tubing or 6 in. (152 mm) . diam steel conduit.
   D. Copper Tubing — Nom 6 in. (152 mm) diam (or smaller) Type L (or heavier) copper tubing.
   E. Copper Pipe — Nom 6 in. (152 mm) diam (or smaller) regular (or heavier) copper pipe.
3. Fill, Void or Cavity Material* — Sealant — Min 5/8 in. (16 mm) thickness of fill material applied within the annulus, flush with both surfaces of wall. At the point or continuous contact locations between pipe and wall, a min 1/2 in. (13 mm) diam bead of fill material shall be applied at the pipe wall interface on both surfaces of wall.
   HILTI CONSTRUCTION CHEMICALS, DIV OF HILTI INC — FS-One Sealant or FS-ONE MAX Intumescent Sealant

* Indicates such products shall bear the UL or cUL Certification Mark for jurisdictions employing the UL or cUL Certification (such as Canada), respectively.

Hilti Firestop Systems

Reproduced by HILTI, Inc. Courtesy of Underwriters Laboratories, Inc. October 14, 2015

Page: 2 of 2

METALLIC CONDUIT THROUGH RATED GYPSUM WALLBOARD/STUD WALL ASSEMBLY | N.T.S. | 4

System No. F-C-3044

CLASSIFIED C UL US
Classified by Underwriters Laboratories, Inc. to UL 1479 and CAN/ULC-S115

ANSI/UL1479 (ASTM E814)	CAN/ULC S115
F Rating — 1 Hr	F Rating — 1 Hr
T Rating — 1 Hr	FT Rating — 1 Hr
	FH Rating — 1 Hr
	FTH Rating — 1 Hr

FC 3044

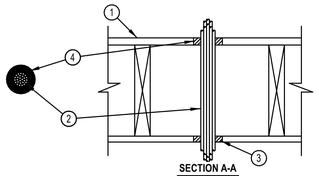

SECTION A-A

1. Floor-Ceiling Assembly — The 1 hr fire-rated solid or trussed lumber joist floor-ceiling assembly shall be constructed of the materials and in the manner specified in the individual L500 Series Floor-Ceiling Designs in the UL Fire Resistance Directory. The general construction features of the floor-ceiling assembly are summarized below:
   A. Flooring System — Lumber or plywood subfloor with finish floor of lumber, plywood or Floor Topping Mixture* as specified in the individual Floor-Ceiling Design. Max diam of opening shall be 3 in. (76 mm).
   B. Wood Joists* — Nom 10 in. (254 mm) deep (or deeper) lumber, steel or combination lumber and steel joists, trusses or Structural Wood Members* with bridging as required and with ends firestopped.
   C. Gypsum Board* — Nom 4 ft (1.2 m) wide by 5/8 in. (16 mm) thick as specified in the individual Floor-Ceiling Design. Max diam of opening shall be 3 in. (76 mm).

1.1 Chase Wall — (Not Shown, Optional)—The through penetrants (Item 2) may be routed through a 1 hr fire-rated single, double or staggered wood stud/gypsum wallboard chase wall having a fire rating consistent with that of the floor-ceiling assembly. The chase wall shall be constructed of the materials and in the manner specified in the individual U300 Series Wall and Partition Designs in the UL Fire Resistance Directory and shall include the following construction features:
   A. Studs — Nom 2 by 4 in. (51 by 102 mm) lumber studs.
   B. Sole Plate — Nom 2 by 4 in. (51 by 102 mm) lumber plates. Max diam of opening shall be 3 in. (76 mm).
   C. Top Plate — The double top plate shall consist of two nom 2 by 4 in. (51 by 102 mm) lumber plates. Max diam of opening shall be 3 in. (76 mm).
   D. Gypsum Board* — Thickness, type, number of layers and fasteners shall be as specified in individual Wall and Partition Design.

Hilti Firestop Systems

Reproduced by HILTI, Inc. Courtesy of Underwriters Laboratories, Inc. January 20, 2015

Page: 1 of 2

System No. F-C-3044

FC 3044

2. Cables — Aggregate cross-sectional area of cables in opening to be max 25 percent of the cross-sectional area of the opening. The annular space within the firestop system shall be 3/4 in. Cables to be rigidly supported on both sides of floor assembly. Any combination of the following types and sizes of cables may be used:
   A. RG 59 coaxial cable with single copper conductor, cellular polyethylene cellular foam insulation and polyvinyl chloride (PVC) jacket.
   B. Max 25 pair No. 24 AWG telephone cable with polyvinyl chloride (PVC) jacketing.
   C. Max 3/C No. 10 AWG cable (Type NM).
   D. Max 3/C with ground No. 2/0 AWG aluminum or copper Type SER cable with polyvinyl chloride (PVC) insulation.
   E. Max 24 fiber optic cable.
   F. Through Penetrating Products* — Three conductor No. 10 AWG Metal-Clad Cable.
   AFC CABLE SYSTEMS INC
3. Fill, Void or Cavity Materials*-Sealant — Min 3/4 in. (19 mm) thickness of sealant applied within the annular space, flush with top surface of floor or sole plate. Min 5/8 in. (16 mm) thickness of sealant applied within annular space, flush with bottom surface of the gypsum wallboard or lower top plate. Sealant forced into the interstices of the cables on both sides of the wall.
   HILTI CONSTRUCTION CHEMICALS, DIV OF HILTI INC — FS-ONE Sealant or FS-ONE MAX Intumescent Sealant

* Indicates such products shall bear the UL or cUL Certification Mark for jurisdictions employing the UL or cUL Certification (such as Canada), respectively.
+Bearing the UL Listing Mark

Hilti Firestop Systems

Reproduced by HILTI, Inc. Courtesy of Underwriters Laboratories, Inc. January 20, 2015

Page: 2 of 2

CABLE THROUGH RATED WOODEN FLOOR-CEILING ASSEMBLY | N.T.S. | 3

HILITI FIRE STOP DETAILS NOTES

1. Refer to architectural specifications for Quality Control requirements, refer to the Quality Control portion of the specification.
2. *Details shown are typical details. If field conditions do not match requirements of typical details, approved alternate details shall be utilized. Field conditions and dimensions need to be verified for compliance with the details, including but not limited to the following:*
   ** Minimum and maximum Width of Joints*
   ** Type and thickness of fire-rated construction. The minimum assembly rating of the firestop assembly shall meet or exceed the highest rating of the adjacent construction.*
3. *If alternate details matching the field conditions are not available, manufacturer's engineering judgment drawings are acceptable. Drawings shall follow the International Firestop Council (IFC) Guidelines for*

   Evaluating Firestop Systems Engineering Judgments.
4. *References:*

   ** Underwriter's Laboratories Fire Resistance Directory, Volume 2*
   ** NFPA 101 Life Safety Code*
   ** All governing local and regional building codes*
5. *Firestop System installation must meet requirements of ASTM E-814 (UL 1479) tested assemblies that provide a fire rating equal to that of construction being penetrated.*
6. *All rated through-penetrations shall be prominently labeled with the following information:*

   ** ATTENTION: Fire Rated Assembly*
   ** UL System #*
   ** Product(s) used*
   ** Hourly Rating (F-Rating)*
   ** Installation Date*

System No. W-J-3060

CLASSIFIED C UL US
Classified by Underwriters Laboratories, Inc. to UL 1479 and CAN/ULC-S115

ANSI/UL1479 (ASTM E814)	CAN/ULC S115
F Ratings — 1 and 2 Hr (See Item 1)	F Ratings — 1 and 2 Hr (See Item 1)
T Rating — 0 Hr	FT Rating — 0 Hr
L Rating At Ambient — 15 CFM/sq ft	FH Ratings — 1 and 2 Hr (See Item 1)
L Rating At 400 F — 8 CFM/sq ft	FTH Rating — 0 Hr
	L Rating At Ambient — 15 CFM/sq ft
	L Rating At 400 F — 8 CFM/sq ft

WJ 3060

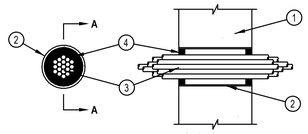

SECTION A-A

1. Wall Assembly — Min 4-3/4 in. and 6 in. (121 and 152 mm) thick reinforced lightweight or normal weight (100-150 pcf or 1600-2400 kg/m3) concrete for 1 and 2 hr ratings , respectively. Wall may also be constructed of any UL Classified Concrete Blocks*. Max diam of opening is 4 in (102 mm). Max diam of opening is 5-1/2 in. (138 mm) when sleeve (Item 2) is employed.
   See Concrete Blocks (CAZT) category in the Fire Resistance Directory for names of manufacturers.
2. Steel Sleeve — (Optional) — Nom 4 in. (102 mm) diam (or smaller) steel electrical metallic tubing (EMT) of Schedule 5 (or heavier) steel pipe or min 0.016 thick (28 MSG or 0.4 mm) galv steel sleeve friction fit or cast into wall flush with wall surfaces. When Schedule 5 steel pipe or EMT is used, sleeve may extend up to 18 in. (457 mm) beyond the wall surfaces. As an option when Schedule 5 steel pipe or EMT is used, sleeve may extend continuously beyond one wall surface.

Hilti Firestop Systems

Reproduced by HILTI, Inc. Courtesy of Underwriters Laboratories, Inc. October 03, 2017

Page: 1 of 2

System No. W-J-3060

WJ 3060

3. Cables — Aggregate cross sectional area of cables to be max 45 percent of the cross sectional area of the opening. Cables installed either concentrically or eccentrically within the firestop system. The annular space between cables and the periphery of the opening or sleeve shall be min 0 in. (point contact) to max 1 in. (25 mm). When sleeve is continuous on one side of wall (see Item 2), the cable fill may be 0 to 45%, and the max annular space within sleeve is not limited. Cables to be rigidly supported on both sides of wall assembly. The following types of cables may be used:
   A. 7/C No. 12 AWG cable with PVC insulation and outer jacket.
   B. Max 25 pair No. 24 AWG telephone cable with PVC insulation and outer jacket.
   C. Max RG 59 (or smaller) coaxial cable with polyethylene insulation and PVC jacket.
   D. Max RG 6/U coaxial cable with fluorinated ethylene insulation and jacketing.
   E. Multiple 24 fiber optic communication cable with PVC jacket, have a max outside diam of 5/8 in. (16 mm).
   F. Max four pair No. 22 AWG Cat 5 or Cat 6 computer cables.
   G. Through Penetrating Product*—Max three copper connector No. 8 AWG Metal-clad Cable+.
   AFC CABLE SYSTEMS INC
   H. Through Penetrating Product* — Any cables, Metal-Clad Cable+ or Armored Cable+ currently Classified under the Through Penetrating Products category.
   See Through Penetrating Product (XHLY) category in the Fire Resistance Directory for names of manufacturers.
4. Fill, Void or Cavity Material* — Sealant — Min 5/8 in. (16 mm) thickness of fill material applied within annulus, flush with both surfaces of wall assembly. An additional 1/2 in. (13 mm) bead of fill material shall be applied around the perimeter of sleeve on both sides of the wall when sleeve extends beyond surface of wall.
   HILTI CONSTRUCTION CHEMICALS, DIV OF HILTI INC — CP601S Sealant, CP606 Sealant, CFS-S SIL GG Sealant, FS-ONE Sealant, FS-ONE MAX Intumescent Sealant, or CP618 Putty
5. Packing Material — (Optional, Not Shown) — Mineral wool forming material may be used as a backer for the fill material (Item 4). When used, it shall be firmly packed into annular space within the sleeve as a permanent form and recessed from end of sleeve to accommodate the required thickness of fill material.

* Indicates such products shall bear the UL or cUL Certification Mark for jurisdictions employing the UL or cUL Certification (such as Canada), respectively.

+Bearing the UL Listing Mark

Hilti Firestop Systems

Reproduced by HILTI, Inc. Courtesy of Underwriters Laboratories, Inc. October 03, 2017

Page: 2 of 2

CABLE THROUGH RATED CONCRETE WALL ASSEMBLY | N.T.S. | 2

System No. F-C-3012

CLASSIFIED C UL US
Classified by Underwriters Laboratories, Inc. to UL 1479 and CAN/ULC-S115

ANSI/UL1479 (ASTM E814)	CAN/ULC S115
F Ratings — 1 and 2 Hr (See Item 1)	F Ratings — 1 and 2 Hr (See Item 1)
T Ratings — 0, 1 and 1-3/4 Hr (See Item 3)	FT Ratings — 0, 1 and 1-3/4 Hr (See Item 3)
	FH Ratings — 1 and 2 Hr (See Item 1)
	FTH Ratings — 0, 1 and 1-3/4 Hr (See Item 3)

FC 3012

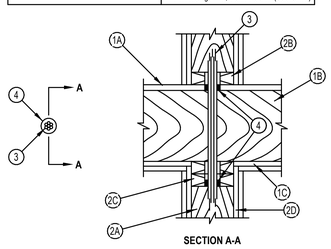

SECTION A-A

1. Floor-Ceiling Assembly — The 1 or 2 hr fire-rated solid or trussed lumber joist floor-ceiling assembly shall be constructed of the materials and in the manner specified in the individual L500 Series Floor-Ceiling Designs in the UL Fire Resistance Directory. The general construction features of the floor-ceiling assembly are summarized below:
   A. Flooring System — Lumber or plywood subfloor with finish floor of lumber, plywood or Floor Topping Mixture* as specified in the individual Floor-Ceiling Design. Max diam of opening for 1 or 2 hr assembly is 2-1/2 in. (64 mm) or 2 in. (51 mm), respectively.
   B. Wood Joists* — Nom 10 in. (254 mm) deep (or deeper) lumber, steel or combination lumber and steel joists, trusses or Structural Wood Members* with bridging as required and with ends firestopped.
   C. Furring Channels — (Not Shown) — (As required) - Resilient galvanized steel furring installed in accordance with the manner specified in the individual L500 Series Designs in the Fire Resistance Directory.
   D. Gypsum Board* — Thickness, type, number of layers and fasteners shall be as specified in the individual Floor-Ceiling Design. Max diam of opening for 1 or 2 hr assembly is 2-1/2 in. (64 mm) or 2 in. (51 mm), respectively.

The F Rating of the firestop system is equal to the rating of the floor-ceiling assembly.

Hilti Firestop Systems

Reproduced by HILTI, Inc. Courtesy of Underwriters Laboratories, Inc. April 06, 2018

Page: 1 of 2

System No. F-C-3012

FC 3012

2. Chase Wall — (Optional) - The through penetrant (Item 3) may be routed through a fire-rated or non-rated single, double or staggered wood stud/gypsum wallboard chase wall. The chase wall shall be constructed to include the following construction features:
   A. Studs — Nom 2 by 6 in. (51 by 152 mm) or double nom 2 by 4 in. (51 by 102 mm) lumber studs.
   B. Sole Plate — Nom 2 by 6 in. (51 by 152 mm) or parallel 2 by 4 in. (51 by 102 mm) lumber plates, tightly butted. Max diam of opening for 1 or 2 hr rated assembly is 2-1/2 in. (64 mm) or 2 in. (51 mm), respectively.
   C. Top Plate — The double top plate shall consist of two nom 2 by 6 in. (51 by 152 mm) or two sets of parallel 2 by 4 in. (51 by 102 mm) lumber plates, tightly butted. Max diam of opening for 1 or 2 hr rated assembly is 2-1/2 in. (64 mm) or 2 in. (51 mm), respectively.
   D. Gypsum Board* — One or two layers of min 1/2 in. (13 mm) gypsum board.
3. Cables — In 1 hr fire-rated assemblies, aggregate cross-sectional area of cables in opening to be max 45 percent of the cross-sectional area of the opening (max 2 in. (51 mm) diam bundle). Cables to be rigidly supported on both sides of floor assembly. Any combination of the following types and sizes of copper conductors may be used:
   A. RG 59 coaxial cable with single copper conductor, cellular polyethylene cellular foam insulation and polyvinyl chloride (PVC) jacket.
   B. Max 8/C No. 22 AWG telephone cable with polyvinyl chloride (PVC) jacketing.
   C. Max 2/C No. 12 AWG cable with polyvinyl chloride (PVC) insulation and jacketing.
   D. Max 3/C with ground No. 2/0 AWG aluminum or copper Type SER cable with polyvinyl chloride (PVC) insulation.
   E. Max 3/C with ground No. 2/0 AWG Type NM cable with polyvinyl chloride (PVC) insulation.
   F. Max 3/C No. 12 AWG MC (BX) cable with polyvinyl chloride (PVC) insulation.
   G. Max 1 in. diam metal clad TEK cable with PVC jacket.
   H. Max 4/C with ground No. 300 kcmil (or smaller) aluminum SER cable with PVC insulation and jacket.
   I. Through Penetrating Product* - Any cables, Metal-Clad Cable+ or Armored Cable+ currently Classified under the Through Penetrating Products category.
   See Through Penetrating Product (XHLY) category in the Fire Resistance Directory for names of manufacturers.

The T Rating is 1 and 1-3/4 hr for 1 and 2 hr rated assemblies, respectively, for cables 3A through 3G. The T Rating is 0 hr for cables 3H and 3I.
4. Fill, Void or Cavity Material* — Sealant — Min 3/4 in. (19 mm) thickness of fill material applied within the annulus, flush with top surface of floor or sole plate. Min 5/8 in. (16 mm) thickness of fill material also applied within the annulus, flush with bottom surface of ceiling or lower top plate.

HILTI CONSTRUCTION CHEMICALS, DIV OF HILTI INC — FS611A Sealant or FS-One Sealant or FS-ONE MAX Intumescent Sealant

* Indicates such products shall bear the UL or cUL Certification Mark for jurisdictions employing the UL or cUL Certification (such as Canada), respectively.

Hilti Firestop Systems

Reproduced by HILTI, Inc. Courtesy of Underwriters Laboratories, Inc. April 06, 2018

Page: 2 of 2

CABLE THROUGH RATED WOODEN FLOOR-CEILING ASSEMBLY | N.T.S. | 1

CLAYTON COUNTY LIBRARY SYSTEM

RIVERDALE LIBRARY ADDITION

420 Valley Hill Rd, Riverdale, GA 30274

HAMMOND ENGINEERING, INC
CONSULTING ENGINEERS
6961 PEACHTREE INDUSTRIAL BLVD, #208
NORCROSS, GEORGIA, 30092
TEL: (678)292-6937
NATHANIEL D. HAMMOND P.E.
MECHANICAL/ELECTRICAL ENGINEER
P.E. #047450

© 2025 - THESE DOCUMENTS REMAIN THE PROPERTY OF THE ARCHITECT AND MAY NOT BE USED, OR REPRODUCED WITHOUT WRITTEN PERMISSION.

RELEASED FOR CONSTRUCTION

Revisions

No.	Date	Description
	03/19/2025	50% SET
	03/28/2025	100% SET
	03/31/2025	100% SET
	06/10/2025	100% SET

GEORGIA REGISTERED PROFESSIONAL ENGINEER NATHANIEL HAMMOND P.E. No. 047450

06/10/2025

Gardner Spencer Smith Tench & Jarbeau
A Professional Corporation for the Practice of Architecture
www.gsstj.com
50 Hurt Plaza SW, Suite 1100
Atlanta, Georgia 30303
404.522.8805
404.521.2118 (F)

PROJECT NO.
24105

SHEET TITLE
HILTI FIRE STOP DETAILS

SHEET NO.
E0.02B

System No. W-J-3189

W-J-3189

Classified by Underwriters Laboratories, Inc. to UL 1479 and CAN/ULC-S115

ANSI/UL1479 (ASTM E814)	CAN/ULC S115
F Rating - 2 Hr	F Rating - 2 Hr
T Ratings - 1/2 and 1-1/2 Hr (See Item 2)	FT Ratings - 1/2 and 1-1/2 Hr (See Item 2)
L Rating At Ambient - 1.2 and Less Than 1 CFM per Device (See Items 2, 3A and 3A1)	FH Rating - 2 Hr
L Ratings At 400 F - 1.3, 1.6 and Less Than 1 CFM per Device (See Items 2, 3A and 3A1)	FTH Ratings - 1/2 and 1-1/2 Hr (See Item 2)
	L Rating At Ambient - 0.6 and Less Than 0.5 L/s per Device (See Items 2, 3A and 3A1)
	L Ratings At 204°C - 0.6, 0.8 and Less Than 0.5 L/s per Device (See Items 2, 3A and 3A1)

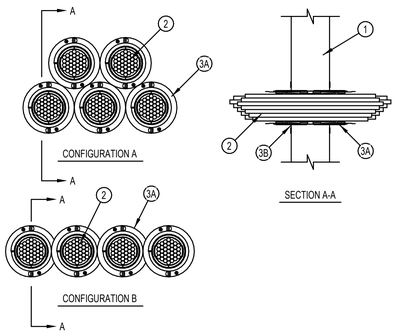

Hilti Firestop Systems

Reproduced by HILTI, Inc. Courtesy of Underwriters Laboratories, Inc. July 02, 2018

Page: 1 of 3

System No. W-J-3189

W-J-3189

1. Wall Assembly — Minimum 5 in. (127 mm) thick reinforced lightweight or normal weight (100-150 pcf or 1600-2400 kg/m3) concrete wall. Wall may also be constructed of any UL Classified Concrete Blocks*. Maximum five individual openings may be provided (see Item 3A). Diam of opening for each firestop device shall not exceed 4-1/2 in. (114 mm) and shall be sized to the OD of the firestop device. See Concrete Blocks (CAZT) category in the Fire Resistance Directory for names of manufacturers.
2. Cables — The aggregate cross-sectional area of cables in firestop devices to be min 0 percent (blank) to max 100 percent visual fill. Cables to be tightly bundled within the device and rigidly supported on both sides of wall assembly. Any combination of the following types and sizes of cables may be used:
   - A. Max 100 pair No. 24 AWG (or smaller) copper conductor telecommunication cable with polyvinyl chloride (PVC) jacketing and insulation.
   - B. Max 7/C No. 12 AWG copper conductor control cable with PVC or XLPE jacket and insulation.
   - C. Max 4/0 AWG Type RHH ground cable.
   - D. Max 4 pr No. 22 AWG Cat 5 or Cat 6 computer cables.
   - E. Max RG 6/U coaxial cable with fluorinated ethylene insulation and jacketing.
   - F. Fiber optic cable with polyvinyl chloride (PVC) or polyethylene (PE) jacket and insulation having a max diam of 1/2 in. (13 mm).
   - G. Max 20/C No. 22 AWG shielded printer cable with PVC jacket.
   - H. Through-Penetrating Product* - Two copper conductors No. 18 AWG (or smaller) Power or Non Power Limited Fire Alarm Cable with or without a jacket under a metal armor.

   AFC CABLE SYSTEMS INC
   - I. Max. 1/4 in. (6 mm) diameter S-Video Cable consisting of 2 max 24 AWG 75 ohm coax or twisted pair cable with PE insulation and PVC jacket .
   - J. Max 3/C No 12 AWG MC Cable.
   - K. Through Penetrating Product* — Any cables, Armored Cable+ or Metal Clad Cable+ currently Classified under the Through Penetrating Product category. See Through Penetrating Product (XHLY) category in the Fire Resistance Directory for names of manufacturers.

   For opening with cables, the T, FT and FTH Ratings are 1/2 hr. For blank opening (no cables), the T, FT and FTH Ratings are 1-1/2 hr.

   L Ratings vary depending on whether the gasketing material (see Item 3) or the sealant (Item 4) is used. See Table below for L Ratings.

Max Cable Fill	Cable Type	Type L Rating, CFM (L/s) Per Device			
		Ambient		400°F (204°C)	
		Sealant	Gasket	Sealant	Gasket
0%	—	Less than 1 (Less than 0.5)	Less than 1 (Less than 0.5)	Less than 1 (Less than 0.5)	Less than 1 (Less than 0.5)
100%	Item 2D only	Less than 1 (Less than 0.5)	Less than 1 (Less than 0.5)	Less than 1 (Less than 0.5)	Less than 1 (Less than 0.5)
100%	Any cables (Item 2) in any combination	1.2 (0.6)	1.2 (0.6)	1.3 (0.6)	1.6 (0.8)

Hilti Firestop Systems

Reproduced by HILTI, Inc. Courtesy of Underwriters Laboratories, Inc. July 02, 2018

Page: 2 of 3

System No. W-J-3189

W-J-3189

3. Firestop System — The firestop system shall consist of the following:
   - A. Firestop Device* — Maximum five firestop devices grouped in two row configuration as depicted. The individual openings in the wall for each device are spaced min 2-7/16 in. (62 mm) apart such that the device flanges of adjacent devices are no closer than point contact. Firestop device consists of a corrugated steel tube with an inner plastic housing. Intumescent material rings, twisted inner fabric smoke seal, flanges and gasketing material (not shown). Firestop device to be installed in accordance with the accompanying installation instructions. As an option, the inner fabric seal within each device may remain open except that, for all blank devices (no cables), the inner fabric seal shall be twisted to completely close the device. In addition, to attain the L Rating, the inner fabric seal must also be twisted to completely close the opening within each device. Device slid into wall such that ends project an equal distance from the approximate centerline of the wall assembly. Device provided with flanges that are spun clockwise onto device threads, over gasketing material butting tightly to both sides of wall. The annular space between each device and the periphery of the opening shall be nom 0 in. (point contact). Device flanges are to be secured to wall with min two 1-1/4 in. (32 mm) long masonry screws or anchors. As an alternate to gasket material, sealant (Item 3B) may be used.

     HILTI CONSTRUCTION CHEMICALS, DIV OF HILTI INC — CP 653 and CP 653 BA 2" Speed Sleeve, CP 653 and CP 653 BA 4" Speed Sleeve, CFS-SL GA L Speed Sleeves, CP 653 4" BA ILS and CFS-SL GA L ILS Speed Sleeve.

     The CFS-SL GA L and CFS-SL GA L ILS Speed Sleeves shall only be used in wall thickness of 8 in. (203 mm) or greater.
   - A1. Firestop Device* — Same as Item A above except maximum four firestop devices grouped in one row as depicted. The individual openings in the wall for each device are spaced min 1-7/16 in. (36.5 mm) apart. Device flanges may overlap one another. As an option, the inner fabric seal may remain open except that, to attain the L Rating, the inner fabric seal shall be twisted to completely close off the opening within each device.

     HILTI CONSTRUCTION CHEMICALS, DIV OF HILTI INC — CP 653 and CP 653 BA 2" Speed Sleeve, CP 653 and CP 653 BA 4" Speed Sleeve, CFS-SL GA L Speed Sleeves, CP 653 4" BA ILS and CFS-SL GA L ILS Speed Sleeve.

     The CFS-SL GA L and CFS-SL GA L ILS Speed Speed Sleeves shall only be used in wall thickness of 8 in. (203 mm) or greater.
   - B. Fill, Void or Cavity Material* — As an alternate to gasket material (see Item 3A), min 1/4 in. (6 mm) bead of fill material applied around periphery of each device to wall interface on both sides of wall prior to installing device flanges.

     HILTI CONSTRUCTION CHEMICALS, DIV OF HILTI INC — CP 606 or FS-ONE MAX Intumescent Sealant.

* Indicates such products shall bear the UL or cUL Certification Mark for jurisdictions employing the UL or cUL Certification (such as Canada), respectively.

Hilti Firestop Systems

Reproduced by HILTI, Inc. Courtesy of Underwriters Laboratories, Inc. July 02, 2018

Page: 3 of 3

CABLE THROUGH RATED CONCRETE WALL ASSEMBLY | N.T.S. | 3

System No. W-L-2078

WL 2078

Classified by Underwriters Laboratories, Inc. to UL 1479

F Ratings — 1 and 2 Hr (See Item 1)
T Ratings — 0, 1 and 2 Hr (See Items 2 and 3)
L Rating At Ambient — 3 CFM/sq ft
L Rating At 400 F — Less Than 1 CFM/sq ft

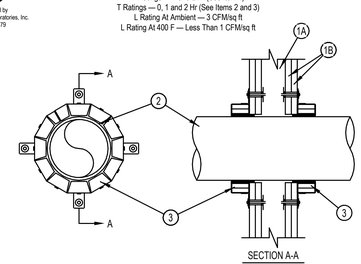

1. Wall Assembly — The fire-rated gypsum board/stud wall assembly shall be constructed of the materials and in the manner specified in the individual U300, U400, V400 or W400 Series Wall and Partition Designs in the UL fire Resistance Directory and shall include the construction features noted below:
   - A. Studs — Wall framing may consist of either wood studs or steel channel studs. Wood studs to consist of nom 2 by 4 in. (51 by 102 mm) lumber spaced max 16 in. (406 mm) OC. Steel studs to be min 2-1/2 in. (64 mm) wide and spaced max 24 in. (610 mm) OC.
   - B. Gypsum Board* — Nom 5/8 in. (16 mm) thick gypsum board, as specified in the individual Wall and Partition Design. Max diam of opening is 11-1/2 in. (292 mm).

   The hourly F Rating of the firestop system is equal to the hourly fire rating of the wall assembly in which it is installed.
2. Through-Penetrants — One nonmetallic pipe, conduit or tubing to be installed within the firestop system. The annular space between pipe and periphery of opening shall be min 0 in. (point contact) to max 1/2 in. (13 mm). Pipe or conduit to be rigidly supported on both sides of the wall assembly. The following types and sizes of nonmetallic pipes may be used:
   - A. Polyvinyl Chloride (PVC) Pipe — Nom 10 in. (254 mm) diam (or smaller) Schedule 40 solid-core or cellular core PVC pipe for use in closed (process or supply) or vented (drain, waste or vent) piping system.
   - B. Chlorinated Polyvinyl Chloride (CPVC) Pipe — Nom 10 in. (254 mm) diam (or smaller) SDR13.5 CPVC pipe for use in closed (process or supply) piping systems.
   - C. Acrylonitrile Butadiene Styrene (ABS) Pipe — Nom 6 in. (152 mm) diam (or smaller) Schedule 40 solid-core or cellular core ABS pipe for use in closed (process or supply) or vented (drain, waste or vent) piping systems
   - D. Flame Retardant Polypropylene (FRPP) Pipe — Nom 6 in. (152 mm) diam (or smaller) Schedule 40 FRPP pipe for use in closed (process or supply) or vented (drain, waste or vent) piping system.
   - E. Polyvinylidene Fluoride (PVDF) Pipe — Nom 4 in. (102 mm) diam (or smaller) PVDF pipe for use in closed (process or supply) or vented (drain, waste or vent) piping system.
   - F. Crosslinked Polyethylene (PEX) Tubing — Nom 4 in. (102 mm) diam (or smaller) SDR 9 Uponor AquaPEX or Wirsbo hePEX PEX tube for use in closed (process or supply) piping systems.

   When max 6 in. diam pipe is used, T Rating is equal to the hourly fire rating of the wall except that when penetrant type 2F is used, T Rating is 0 hr. When nom 8 in. or 10 in. (203 or 254 mm) diam pipe is used, T Rating is 0 hr.

Hilti Firestop Systems

Reproduced by HILTI, Inc. Courtesy of Underwriters Laboratories, Inc. July 31, 2018

Page: 1 of 2

System No. W-L-2078

WL 2078

3. Firestop Device* — Firestop Collar — Firestop collar shall be installed in accordance with the accompanying installation instructions. Collar to be installed and latched around the pipe and secured to both sides of the wall using the anchor hooks provided with the collar. (Minimum two anchor hooks for 1-1/2 and 2 in. (38 and 51 mm) diam pipes, three anchor hooks for 3 and 4 in. (76 and 102 mm) diam pipes, four anchor hooks for 6 in. (152 mm) diam pipes, ten anchor hooks for 8 in. (203 mm) diam pipes and twelve anchor hooks for 10 in. (254 mm) diam pipes. The anchor hooks are to be secured to the surface of wall with 3/16 in. (4.8 mm) diam by 2-1/2 in. (64 mm) long steel toggle bolts along with washers. As an alternate for pipe sizes of nom 4 in. diam or less, min No. 10 by 1-1/2 in. (254 by 38 mm) long drywall or laminate screws with min 3/4 in. (19 mm) steel washers may be used. When the drywall or laminate screw is used, T Rating shall not exceed 1 hr.

   HILTI CONSTRUCTION CHEMICALS, DIV OF HILTI INC — CP 643 50/1.5"N, CP 643 63/2"N, CP 643 90/3"N, CP 643 110/4"N, CP 643 160/6"N, CP 644-200/8" US and CP 644-250/10" US Firestop Collars
4. Fill, Void or Cavity Material* —Sealant - (Not Shown) — Min 1/2 in. (13 mm) thickness of sealant applied within the annular space for nom 8 in. and 10 in. (203 and 254 mm) diam pipes, flush with each side of wall. Sealant in annular space is optional for max 6 in. (152 mm) diam pipes except that for penetrant type 2F, sealant is required. A min 1/4 in. (6 mm) thickness of sealant is required within the annular space, flush with each side of wall, to attain the L Ratings for max 6 in. (152 mm) diam pipes.

   HILTI CONSTRUCTION CHEMICALS, DIV OF HILTI INC — FS-ONE MAX Intumescent Sealant

* Indicates such products shall bear the UL or cUL Certification Mark for jurisdictions employing the UL or cUL Certification (such as Canada), respectively.

Hilti Firestop Systems

Reproduced by HILTI, Inc. Courtesy of Underwriters Laboratories, Inc. July 31, 2018

Page: 2 of 2

NON-METALLIC CONDUIT THROUGH RATED GYPSUM WALLBOARD/STUD WALL ASSEMBLY | N.T.S. | 2

System No. W-L-1164

WL 1164

Classified by Underwriters Laboratories, Inc. to UL 1479 and CAN/ULC-S115

ANSI/UL1479 (ASTM E814)	CAN/ULC S115
F Ratings — 1 and 2 Hr (See Items 1 and 4)	F Ratings — 1 and 2 Hr (See Items 1 and 4)
T Rating — 0 Hr	FT Rating — 0 Hr
	FH Ratings — 1 and 2 Hr (See Items 1 and 4)
	FTH Rating — 0 Hr

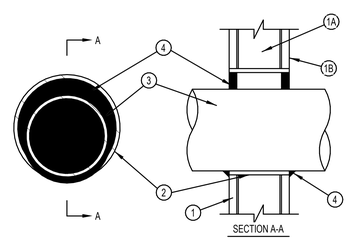

1. Wall Assembly — The 1 or 2 hr fire-rated gypsum wallboard/stud wall assembly shall be constructed of the materials and in the manner described in the individual U300, U400, V400 or W400 Series Wall or Partition Design in the UL Fire Resistance Directory and shall include the following construction features:
   - A. Studs — Wall framing may consist of either wood studs or steel channel studs. Wood studs to consist of nom 2 by 4 in. (51 by 102 mm) lumber spaced 16 in. (406 mm) OC. Steel studs to be min 2-1/2 in. (64 mm) wide and spaced max 24 in. (610 mm) OC. When steel studs are used and the diam of opening exceeds the width of stud cavity, the opening shall be framed on all sides using lengths of steel stud installed between the vertical studs and screw-attached to the steel studs at each end. The framed opening in the wall shall be 4 to 6 in. (102 to 152 mm) wider and 4 to 6 in. (102 to 152 mm) higher than the diam of the penetrating item such that, when the penetrating item is installed in the opening, a 2 to 3 in. (51 to 76 mm) clearance is present between the penetrating item and the framing on all four sides.
   - B. Gypsum Board* — The gypsum wallboard type, thickness, number of layers, fastener type and sheet orientation shall be as specified in the individual Wall and Partition Design. Max diam of opening in steel stud walls is 32 in. (813 mm). Max diam of openings in wood stud walls is 14-1/2 in. (368 mm).

   The hourly F, FH Ratings of the firestop system are equal to the hourly fire rating of the wall assembly in which it is installed.
2. Steel Sleeve — Nom 32 in. (813 mm) diam (or smaller) Schedule 40 (or heavier) steel pipe sleeve friction fit in nom 32 in. (813 mm) diam circular opening cut through gypsum board layers. Length of steel sleeve to be equal to thickness of wall.

Hilti Firestop Systems

Reproduced by HILTI, Inc. Courtesy of Underwriters Laboratories, Inc. January 22, 2015

Page: 1 of 2

System No. W-L-1164

WL 1164

3. Through-Penetrant — One metallic pipe, conduit or tubing installed either concentrically or eccentrically within the firestop system. The annular space between pipe, conduit or tubing and the steel sleeve shall be min of 0 in. (point contact) to max 1-7/8 in. (48 mm) Pipe, conduit or tubing to be rigidly supported on both sides of wall assembly. The following types and sizes of metallic pipes, conduits or tubing may be used:
   - A. Steel Pipe — Nom 30 in. (762 mm) diam (or smaller) Schedule 10 (or heavier) steel pipe.
   - B. Iron Pipe — Nom 30 in. (762 mm) diam (or smaller) service weight (or heavier) cast iron soil pipe or Class 50 (or heavier) ductile iron pressure pipe.
   - C. Conduit — Nom 4 in. (102 mm) diam (or smaller) steel electrical metallic tubing.
   - D. Copper Tubing — Nom 6 in. (152 mm) diam (or smaller) Type L (or heavier) copper tubing.
   - E. Copper Pipe — Nom 6 in. (152 mm) diam (or smaller) Regular (or heavier) copper pipe.
4. Fill, Void or Cavity Material*-Sealant — Min 5/8 in. (16 mm) and 1-1/4 in. (32 mm) thickness of fill material applied within annulus, flush with both surfaces of wall assembly for 1 or 2 hr rated walls, respectively. Min 1/2 in. (13 mm) diam bead of caulk applied to the penetrant/gypsumboard interface at the point contact location on both sides of wall.

   HILTI CONSTRUCTION CHEMICALS, DIV OF HILTI INC — FS-ONE Sealant or FS-ONE MAX Intumescent Sealant

* Indicates such products shall bear the UL or cUL Certification Mark for jurisdictions employing the UL or cUL Certification (such as Canada), respectively.

Hilti Firestop Systems

Reproduced by HILTI, Inc. Courtesy of Underwriters Laboratories, Inc. January 22, 2015

Page: 2 of 2

METALLIC CONDUIT THROUGH RATED GYPSUM WALLBOARD/STUD WALL ASSEMBLY | N.T.S. | 1

HILITI FIRE STOP DETAILS NOTES

1. Refer to architectural specifications for Quality Control requirements, refer to the Quality Control portion of the specification.
2. *Details shown are typical details. If field conditions do not match requirements of typical details, approved alternate details shall be utilized. Field conditions and dimensions need to be verified for compliance with the details, including but not limited to the following:*
   - ** Minimum and maximum Width of Joints*
   - ** Type and thickness of fire-rated construction. The minimum assembly rating of the firestop assembly shall meet or exceed the highest rating of the adjacent construction.*
3. *If alternate details matching the field conditions are not available, manufacturer's engineering judgment drawings are acceptable. Drawings shall follow the International Firestop Council (IFC) Guidelines for Evaluating Firestop Systems Engineering Judgments.*
4. *References:*
   - ** Underwriter's Laboratories Fire Resistance Directory, Volume 2*
   - ** NFPA 101 Life Safety Code*
   - ** All governing local and regional building codes*
5. *Firestop System installation must meet requirements of ASTM E-814 (UL 1479) tested assemblies that provide a fire rating equal to that of construction being penetrated.*
6. *All rated through-penetrations shall be prominently labeled with the following information:*
   - ** ATTENTION: Fire Rated Assembly*
   - ** UL System #*
   - ** Product(s) used*
   - ** Hourly Rating (F-Rating)*
   - ** Installation Date*

CLAYTON COUNTY LIBRARY SYSTEM

RIVERDALE LIBRARY ADDITION

420 Valley Hill Rd, Riverdale, GA 30274

HAMMOND ENGINEERING, INC
CONSULTING ENGINEERS
6961 PEACHTREE INDUSTRIAL BLVD. #208
NORCROSS, GEORGIA, 30092
TEL: (678)292-6937
NATHANIEL D. HAMMOND P.E.
MECHANICAL/ELECTRICAL ENGINEER
P.E. #047450

RELEASED FOR CONSTRUCTION

Revisions

No.	Date	Description
	03/19/2025	50% SET
	03/28/2025	100% SET
	03/31/2025	100% SET
	06/10/2025	100% SET

GEORGIA REGISTERED PROFESSIONAL ENGINEER NATHANIEL D. HAMMOND

06/10/2025

Gardner Spencer Smith Tench & Jarbeau
A Professional Corporation
for the Practice of Architecture
www.gsstj.com

50 Hurt Plaza SW,
Suite 1100
Atlanta, Georgia
30303
404.522.8805
404.521.2118 (F)

PROJECT NO.

24105

SHEET TITLE

HILTI FIRE STOP DETAILS

SHEET NO.

E0.02C

© 2025 - THESE DOCUMENTS REMAIN THE PROPERTY OF THE ARCHITECT AND MAY NOT BE USED, OR REPRODUCED WITHOUT WRITTEN PERMISSION.

System No. W-L-3065

WL 3065

Classified by Underwriters Laboratories, Inc., to UL 1479 and CAN/ULC-S115

ANSI/UL1479 (ASTM E814)	CAN/ULC S115
F Rating — 1 and 2 Hr (See Item 1)	F Rating — 1 and 2 Hr (See Item 1)
T Rating — 0 and 3/4 Hr (See Item 3)	FT Rating — 0 and 3/4 Hr (See Item 3)
L Rating At Ambient — 15 CFM/sq ft	FH Rating — 1 and 2 Hr (See Item 1)
L Rating At 400 F — 8 CFM/sq ft	FTH Rating — 0 and 3/4 Hr (See Item 3)
	L Rating At Ambient — 15 CFM/sq ft
	L Rating At 400 F — 8 CFM/sq ft

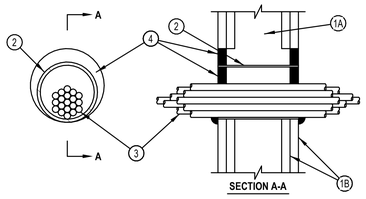

SECTION A-A

1. Wall Assembly — The 1 or 2 fire-rated gypsum wallboard/stud wall assembly shall be constructed of the materials and in the manner specified in the individual U300, U400, V400 or W400 Series Wall and Partition Designs in the UL Fire Resistance Directory and shall include the following construction features:
   A. Studs — Wall framing may consist of either wood studs or steel channel studs. Wood studs to consist of nom 2 by 4 in. (51 by 102 mm) lumber spaced 16 in. (406 mm) OC. Steel studs to be min 2-1/2 in. (64 mm) wide and spaced max 24 in. (610 mm) OC.
   B. Gypsum Board* — Nom 5/8 in. (16 mm) thick gypsum board, with square or tapered edges. The gypsum board type, thickness, number of layers, fastener type and sheet orientation shall be as specified in the individual Wall and Partition Design in the UL Fire Resistance Directory. Max diam of opening is 5-1/2 in. (138 mm) when sleeve (Item 2) is employed. Max diam of opening is 4 in. (102 mm) when sleeve (Item 2) is not employed.

   The F, FH Ratings of the firestop system are equal to the fire rating of the wall assembly.
2. Metallic Sleeve — (Optional) - Nom 4 in. (102 mm) diam (or smaller) steel electrical metallic tubing (EMT) or Schedule 5 (or heavier) steel pipe or min 0.016 in. thick (0.41 mm, No. 28 ga) galv steel sleeve installed flush with wall surfaces. The annular space between steel sleeve and periphery of opening shall be min 0 in. (0 mm, point contact) to max 1 in. (25mm). When Schedule 5 steel pipe or EMT is used, sleeve may extend up to 18 in. (457 mm) beyond the wall surfaces. As an option when Schedule 5 steel pipe or EMT is used, sleeve may extend continuously beyond one wall surface. When cable bundle penetrates wall assembly at an angle of 45 degrees, no metallic sleeve is used.

Hilti Firestop Systems

Reproduced by HILTI, Inc. Courtesy of Underwriters Laboratories, Inc. October 14, 2015

Page: 1 of 2

System No. W-L-3065

WL 3065

3. Cables — Aggregate cross-sectional area of cable in opening to be max 45 percent of the cross-sectional area of the opening. The annular space between the cable bundle and the periphery of the opening to be min 0 in. (point contact) to max 1 in. (25 mm). When sleeve is continuous on one side of wall (see Item 2), the cable fill may be 0 to 45% and the max annular space is not limited. Cables to be rigidly supported on both sides of the wall assembly. Any combination of the following types and sizes of copper conductor cables may be used:
   A. Max 7/C No. 12 AWG with polyvinyl chloride (PVC) insulation and jacket.
   B. Max 25 pair No. 24 AWG telephone cable with PVC insulation and jacket.
   B1. Max 4 pr No. 22 AWG Cat 5 or Cat 6 computer cables.
   C. Type RG/U coaxial cable with polyethylene (PE) insulation and PVC jacket having a max outside diameter of ½ in. (13 mm).
   C1. Max RG 6/U coaxial cable with fluorinated ethylene insulation and jacketing.
   D. Multiple fiber optical communication cable jacketed with PVC and having a max OD of 5/8 in. (16 mm).
   E. Through Penetrating Products*— Max three copper conductor No. 8 AWG Metal-Clad Cable+.
   AFC CABLE SYSTEMS INC
   F. Max 3/C (with ground)(or smaller) No. 8 AWG copper conductor cable with PVC insulation and jacketing.
   G. Max 3/4 in. (19 mm) diam copper ground cable with or without a PVC jacket.
   H. Fire Resistive Cables* - Max 1-1/4 in. (32 mm) diam single conductor or multi conductor Type MI cable. A min 1/8 in. (3 mm) separation shall be maintained between MI cables and any other types of cable.
   I. Max 4/C with ground 300 kcmil (or smaller) aluminum SER cable with PVC insulation and jacket.
   J. Through Penetrating Product* - Any cables, Metal-Clad Cable+ or Armored Cable+ currently Classified under the Through Penetrating Products category.
   K. Maximum 3/C No. 8 AWG metal-clad cable.
   L. Maximum 5/8 diam fiber-optic cable with PVC jacket.
   For cable bundle penetrating the wall assembly at an angle of 45 degrees, the T, FT, FTH Ratings are 0 hr and 3/4 hr for 1 and 2 hr wall assemblies, respectively.
   See Through Penetrating Product (XHLY) category in the Fire Resistance Directory for names of manufacturers.
4. Fill, Void or Cavity Material*— Sealant or Putty — Fill material applied within the annulus, flush with each end of the steel sleeve or wall surface. Fill material installed symmetrically on both sides of the wall. A min 5/8 in. (16 mm) thickness of sealant is required for the 1 or 2 hr F Rating . An additional 1/2 in. (13 mm) diam bead of fill material shall be applied at the interface of sleeve with gypsum board.

HILTI CONSTRUCTION CHEMICALS, DIV OF HILTI INC — CP601S, CP606, FS-One Sealants or FS-ONE MAX Intumescent Sealantor or CP618 Putty

5. Packing Material — (Optional, Not Shown) — Mineral wool forming material may be used as a backer for the fill material (Item 4). When used, it shall be firmly packed into annular space within the sleeve as a permanent form and recessed from end of sleeve to accommodate the required thickness of fill material.

* Indicates such products shall bear the UL or cUL Certification Mark for jurisdictions employing the UL or cUL Certification (such as Canada), respectively.

Hilti Firestop Systems

Reproduced by HILTI, Inc. Courtesy of Underwriters Laboratories, Inc. October 14, 2015

Page: 2 of 2

CABLES THROUGH RATED GYPSUM WALLBOARD/STUD WALL ASSEMBLY | N.T.S. | 2

System No. W-L-3334

WL 3334

Classified by Underwriters Laboratories, Inc., to UL 1479 and CAN/ULC-S115

ANSI/UL1479 (ASTM E814)	CAN/ULC S115
F Ratings - 1, 2, 3 and 4 Hr (See Item 1)	F Ratings - 1, 2, 3 and 4 Hr (See Item 1)
T Ratings - 0, 1/2, 1, 1-1/2, 2 Hr (See Items 2 and 3)	FT Ratings - 0, 1/2, 1-1/2, and 2 Hr (See Items 2 and 3)
L Rating At Ambient - See Item 2	FH Ratings - 1, 2, 3 and 4 Hr (See Item 1)
L Ratings At 400 F - See Item 2	FTH Ratings - 0, 1/2, 1, 1-1/2, and 2Hr (See Items 2 and 3)
	L Rating At Ambient - See Item 2
	L Ratings At 204°C - See Item 2

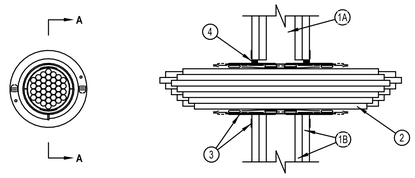

SECTION A-A

Hilti Firestop Systems

Reproduced by HILTI, Inc. Courtesy of Underwriters Laboratories, Inc. July 05, 2018

Page: 1 of 3

System No. W-L-3334

WL 3334

1. Wall Assembly — The 1, 2, 3 or 4 hr fire rated gypsum board/stud wall assembly shall be constructed of the materials and in the manner described within the individual U300, U400, V400 or W400 Series Wall and Partition Designs in the UL Fire Resistance Directory and shall incorporate the following construction features:
   A. Studs — Wall framing shall consist of either wood studs or steel channel studs. Wood studs to consist of nom 2 by 4 in. (51 by 102 mm) lumber spaced max 16 in. (406 mm) OC. Steel studs to be min 2-1/2 in. (64 mm) wide and spaced max 24 in. (610 mm) OC for 1 and 2 hr wall assemblies. Steel Studs to be 3-5/8 in. (92 mm) for 3 and 4 hr wall assemblies. Steel studs to be min 3-1/2 in. (89 mm) wide when 3/4 in. (19 mm) thick gypsum board is used (see Item 1B).
   B. Gypsum Board* — Nom 5/8 in. (16 mm) thick gypsum board as specified in the individual Wall and Partition Design. Alternately, for 1 and 2 hr rated walls only, min one layer of nom 3/4 in. (19 mm) thick gypsum board on each side of wall as specified in the individual Wall and Partition Design may be used. Opening in gypsum board to be max 2-1/2 in. (64 mm) diam for 2" device and max 4-1/2 in. (114 mm) diam for 4" device.
   The hourly F and FH Ratings of the firestop system are dependent upon the hourly rating of the wall in which it is installed.
2. Cables — Within the loading area for each firestop device, the cables may represent a 0 to 100 percent visual fill. Cables to be tightly bundled within the device and rigidly supported on both sides of wall assembly. Any combination of the following types of cables may be used:
   A. Max 100 pair No. 24 AWG (or smaller) copper conductor telecommunication cable with polyvinyl chloride (PVC) jacketing and insulation.
   B. Max 7/C No. 12 AWG copper conductor control cable with PVC or XLPE jacket and insulation.
   C. Max 4/0 AWG Type RHH ground cable.
   D. Max 4 pr No. 22 AWG Cat 5 or Cat 6 computer cables.
   E. Max RG 6/U coaxial cable with fluorinated ethylene insulation and jacketing.
   F. Fiber optic cable with polyvinyl chloride (PVC) or polyethylene (PE) jacket and insulation having a max diam of 1/2 in. (13 mm).
   G. Max 20/C No. 22 AWG shielded printer cable with PVC jacket.
   H. Through-Penetrating Product* - Two copper conductors No. 18 AWG (or smaller) Power or Non Power Limited Fire Alarm Cable with or without a jacket under a metal armor.
   AFC CABLE SYSTEMS INC
   I. Max. 1/4 in. (6 mm) diameter S-Video Cable consisting of 2 max 24 AWG 75 ohm coax or twisted pair cable with PE insulation and PVC jacket .
   J. Max 3/C No 12 AWG MC Cable.
   K. Through Penetrating Product* — Any cables, Armored Cable+ or Metal Clad Cable+ currently Classified under the Through Penetrating Product category. See Through Penetrating Product (XHLY) category in the Fire Resistance Directory for names of manufacturers.
   When the hourly rating of the wall assembly is 1 hr, the T, FT and FTH Ratings are 0 hr. When the hourly rating of the wall assembly is 2 hr, the T, FT and FTH Ratings are 1 hr except that, when Item 2J or 2K is used, the T, FT and FTH Ratings are 1/2 hr . When the hourly rating of the wall assembly is 3 or 4 hr, the T, FT and FTH Ratings are 1-1/2 and 2 hr, respectively.
   L Ratings apply only when device flanges are used. L Ratings vary depending on whether the gasketing material (see Item 3) or the sealant (Item 4) is used. See Table below for L Ratings.

Max Cable Fill	Cable Type	L Rating, CFM/Sq Ft (Ls/m ^{2})				L Rating, CFM (L/s)			
		Ambient		400°F (204°C)		Ambient		400°F (204°C)	
		Sealant	Gasket	Sealant	Gasket	Sealant	Gasket	Sealant	Gasket
0%	—	Less than 1 (Less than 5.1)	1.0 (5.1)	Less than 1 (Less than 5.1)	2.7 (13.7)	Less than 1	Less than 1 (Less than 0.5)	Less than 1 (Less than 0.5)	Less than 1 (Less than 0.5)
100%	Item 2D only	4.9 (24.9)	4.9 (24.9)	1.3 (6.6)	3.5 (17.8)	Less than 1 (Less than 0.5)	Less than 1 (Less than 0.5)	Less than 1 (Less than 0.5)	Less than 1 (Less than 0.5)
100%	Any cables (Item 2) in any combination	9.2 (46.7)	9.2 (46.7)	9.6 (48.8)	11.8 (59.9)	1.2 (0.6)	1.2 (0.6)	1.3 (0.6)	1.6 (0.8)

Hilti Firestop Systems

Reproduced by HILTI, Inc. Courtesy of Underwriters Laboratories, Inc. July 05, 2018

Page: 2 of 3

CABLES THROUGH RATED GYPSUM WALLBOARD/STUD WALL ASSEMBLY | N.T.S. | 1

System No. W-L-3334

WL 3334

3. Firestop Device* — Firestop device consists of a corrugated steel tube with an inner plastic housing, intumescent material rings, twisted inner fabric smoke seal, flanges and gasketing material (not shown). Firestop device to be installed in accordance with the accompanying installation instructions. As an option, the inner fabric seal may remain open except that, to attain the L Rating, the inner fabric seal shall be twisted to completely close off the opening within device. Device slid into wall such that ends project an equal distance from the approximate centerline of the wall assembly. The annular space between the device and the periphery of the opening shall be min 0 in. (point contact). Device provided with flanges that are spun clockwise onto device threads, over gasketing material butting tightly to both sides of wall. As an alternate to gasket material, sealant (Item 4) may be used. Device flanges are optional, except that when 3/4 in. (19 mm) gypsum board (see Item 1B) is used, device flanges shall be used and for 3 and 4 hr fire rating, device flanges shall be used. When the device flanges are not used, the T, FT and FTH Ratings for the firestop system are 0 hr.
   HILTI CONSTRUCTION CHEMICALS, DIV OF HILTI INC — CP 653 and CP 653 BA 2" Speed Sleeve, CP 653 and CP 653 BA 4" Speed Sleeve, CFS-SL GA L Speed Sleeves, CP 653 4" BA ILS and CFS-SL GA L ILS Speed Sleeve
   The CFS-SL GA L and CFS-SL GA L ILS Speed Sleeves shall only be used in wall thickness of 8 in. (203 mm) or greater.
4. Fill, Void or Cavity Material* - Sealant — As an alternate to gasket material (see Item 3), min 1/2 in. (13 mm) thickness of fill material applied within the annulus between firestop device and wall, flush with both surfaces of wall, and an additional 1/4 in. (6 mm) bead applied around periphery of device. When device flanges are used, gypsum drywall compound may be used in place of the fill material. Sealant is required when device flanges are not used (see Item 3).

   HILTI CONSTRUCTION CHEMICALS, DIV OF HILTI INC — FS-ONE MAX Intumescent Sealant, or CP 606 Sealant

*Indicates such products shall bear the UL or cUL Certification Mark for jurisdictions employing the UL or cUL Certification (such as Canada), respectively.

+Bearing the UL Listing Mark

Hilti Firestop Systems

Reproduced by HILTI, Inc. Courtesy of Underwriters Laboratories, Inc. July 05, 2018

Page: 3 of 3

HILITI FIRE STOP DETAILS NOTES

1. Refer to architectural specifications for Quality Control requirements, refer to the Quality Control portion of the specification.
2. *Details shown are typical details. If field conditions do not match requirements of typical details, approved alternate details shall be utilized. Field conditions and dimensions need to be verified for compliance with the details, including but not limited to the following:*
   ** Minimum and maximum Width of Joints*
   ** Type and thickness of fire-rated construction. The minimum assembly rating of the firestop assembly shall meet or exceed the highest rating of the adjacent construction.*
3. *If alternate details matching the field conditions are not available, manufacturer's engineering judgment drawings are acceptable. Drawings shall follow the International Firestop Council (IFC) Guidelines for*

   Evaluating Firestop Systems Engineering Judgments.
4. *References:*

   ** Underwriter's Laboratories Fire Resistance Directory, Volume 2*
   ** NFPA 101 Life Safety Code*
   ** All governing local and regional building codes*
5. *Firestop System installation must meet requirements of ASTM E-814 (UL 1479) tested assemblies that provide a fire rating equal to that of construction being penetrated.*
6. *All rated through-penetrations shall be prominently labeled with the following information:*

   ** ATTENTION: Fire Rated Assembly*
   ** UL System #*
   ** Product(s) used*
   ** Hourly Rating (F-Rating)*
   ** Installation Date*

CLAYTON COUNTY LIBRARY SYSTEM

RIVERDALE LIBRARY ADDITION

420 Valley Hill Rd, Riverdale, GA 30274

HAMMOND ENGINEERING, INC
CONSULTING ENGINEERS
6961 PEACHTREE INDUSTRIAL BLVD. #208
NORCROSS, GEORGIA, 30092
TEL: (678)292-6937
NATHANIEL D. HAMMOND P.E.
MECHANICAL/ELECTRICAL ENGINEER
P.E. #047450

© 2025 THESE DOCUMENTS REMAIN THE PROPERTY OF THE ARCHITECT AND MAY NOT BE USED, OR REPRODUCED WITHOUT WRITTEN PERMISSION.

RELEASED FOR CONSTRUCTION

Revisions

No.	Date	Description
	03/19/2025	50% SET
	03/28/2025	100% SET
	03/31/2025	100% SET
	06/10/2025	100% SET

GEORGIA REGISTERED PROFESSIONAL ENGINEER NATHANIEL D. HAMMOND

06/10/2025

Gardner Spencer Smith Tench & Jarbeau
A Professional Corporation
for the Practice of Architecture
www.gsstj.com

50 Hurt Plaza SW, Suite 1100
Atlanta, Georgia 30303
404.522.8805
404.521.2118 (F)

PROJECT NO.

24105

SHEET TITLE

HILTI FIRE STOP DETAILS

SHEET NO.

E0.02D

HILITI FIRE STOP DETAILS NOTES

1. Refer to architectural specifications for Quality Control requirements, refer to the Quality Control portion of the specification.

2. *Details shown are typical details. If field conditions do not match requirements of typical details, approved alternate details shall be utilized. Field conditions and dimensions need to be verified for compliance with the details, including but not limited to the following:*
   - ** Minimum and maximum Width of Joints*
   - ** Type and thickness of fire-rated construction. The minimum assembly rating of the firestop assembly shall meet or exceed the highest rating of the adjacent construction.*

3. *If alternate details matching the field conditions are not available, manufacturer's engineering judgment drawings are acceptable. Drawings shall follow the International Firestop Council (IFC) Guidelines for*

   Evaluating Firestop Systems Engineering Judgments.

4. *References:*

   ** Underwriter's Laboratories Fire Resistance Directory, Volume 2*
   ** NFPA 101 Life Safety Code*
   ** All governing local and regional building codes*

5. *Firestop System installation must meet requirements of ASTM E-814 (UL 1479) tested assemblies that provide a fire rating equal to that of construction being penetrated.*

6. *All rated through-penetrations shall be prominently labeled with the following information:*

   ** ATTENTION: Fire Rated Assembly*
   ** UL System #*
   ** Product(s) used*
   ** Hourly Rating (F-Rating)*
   ** Installation Date*

CLASSIFIED C UL US
Classified by Underwriters Laboratories, Inc. to UL 263 and CAN/ULC-S101

Wall Opening Protective Materials (CLIV, CLIV7)

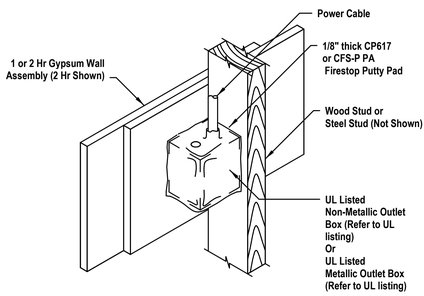

Hilti Firestop Systems

Reproduced by HILTI, Inc. Courtesy of Underwriters Laboratories, Inc. December 07, 2016

CP617 / CFS-P PA / FIRESTOP BOX INSERT

Wall Opening Protective Materials (CLIV, CLIV7)

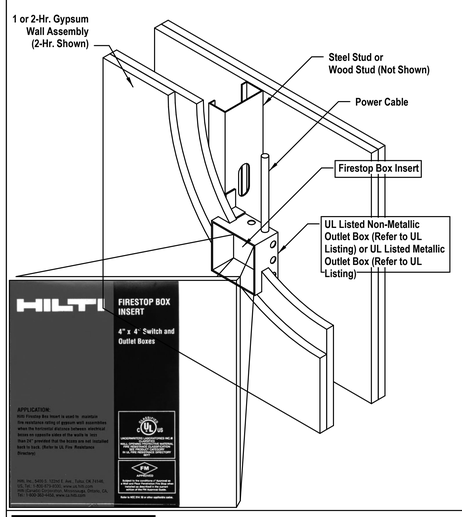

Hilti Firestop Systems

Reproduced by HILTI, Inc. Courtesy of Underwriters Laboratories, Inc. December 07, 2016

CP617 / CFS-P PA / FIRESTOP BOX INSERT

Wall Opening Protective Materials (CLIV, CLIV7)

CP 617 or CFS-P PA Firestop Putty Pads, for use with flush device UL Listed Metallic Outlet Boxes installed with steel mud rings or UL Listed Nonmetallic Outlet Boxes in framed wall assemblies as specified below. When protective material is used on outlet boxes on both sides of the wall as directed, the horizontal separation between outlet boxes on opposite sides of the wall may be less than 24 in. provided that the boxes are not installed back-to-back (unless otherwise indicated). Installation shall comply with the National Electrical Code (NFPA 70). Min 1/8 in. thick (CP 617) or min 0.2 in. (CFS-P PA) thick moldable putty pads are to be installed to completely cover the exterior surfaces of the outlet box (except for the side of the outlet box against the stud) and conduit fittings/connectors and to completely seal against the stud and gypsum board in the wall cavity unless otherwise noted below. When CFS-P PA is used, the putty pads may be installed with the release liner intact on the outside of the pad with the exception of any overlaps, in which case the liner is to be removed from the bottom layer at the overlap location. The box composition, max device dimensions, hourly rating, type of stud and type of faceplate are specified below.

CP 617 or CFS-P PA Firestop Putty Pads, for use with max 4 by 4 by max 2-1/8 in. flush device UL Listed Metallic Outlet Boxes installed with steel cover plates in 1 and 2 hr. fire rated gypsum wallboard wall assemblies framed with min 3-1/2 in. deep wood or steel studs and constructed as specified in the individual U300, U400 or V400 Series Wall and Partition Designs in the Fire Resistance Directory.

CP 617 or CFS-P PA Firestop Putty Pads, for use with max 4-11/16 by 4-11/16 by max 2-1/8 in., or max 4-3/8 by 4-7/8 by max 2-1/8 in., flush device UL Listed Metallic Outlet Boxes installed with steel cover plates for use in 1 hr fire rated V446 gypsum board/steel stud or U341 gypsum board/wood stud Wall and Partition Design No. in the Fire Resistance Directory. When U341 wall design is used, wall shall be sheathed with 5/8 in. gypsum board, and glass or mineral fiber batt insulation shall be installed in stud cavities in accordance with U341 design. Boxes may be installed back-to-back.

CP 617 or CFS-P PA Firestop Putty Pads, for use with max 4-11/16 by 4-11/16 by max 2-1/8 in. flush device UL Listed Metallic Outlet Boxes installed with steel cover plates for use in 1 and 2 hr fire rated gypsum board wall assemblies framed with min 3-1/2 in. deep wood or steel studs and constructed of the materials and in the manner specified in the individual U300, U400 or V400 Series Wall and Partition Designs in the Fire Resistance Directory. Min 0.8 pcf density fiberglass batt insulation is to be installed within the wall cavity required for 1 hr fire rated gypsum board wall assemblies and optional in 2 hr fire rated gypsum wallboard assemblies.

CP 617 or CFS-P PA Firestop Putty Pads, for use with max 4 by 3-3/4 by 3 in. deep UL Listed Nonmetallic Outlet Boxes manufactured by Carlon Electrical Products, made from polyvinyl chloride, and bearing a 2 hr rating under the "Outlet Boxes and Fittings Classification for Fire Resistance" category in the Fire Resistance Directory. Putty pads and boxes for use in 1 and 2 hr fire rated gypsum wallboard assemblies, framed with min 3-1/2 in. deep wood studs and constructed as specified in the individual U300 Series Wall and Partition Designs in the Fire Resistance Directory. Outlet box secured to wood stud by means of two nailing tabs supplied with the outlet box. Putty pads shall lap min 1/2 in. onto the stud and gypsum board within the stud cavity. Outlet boxes installed with steel or plastic cover plates. Boxes may be installed back to back.

CP 617 or CFS-P PA Firestop Putty Pads, for use with max 4 by 4 by 2-7/8 in. deep UL Listed Nonmetallic Outlet Boxes manufactured by Carlon Electrical Products, made from polyvinyl chloride, and bearing a 2 hr rating under the "Outlet Boxes and Fittings Classification for Fire Resistance" category in the Fire Resistance Directory. Putty pads and boxes for use in the 1 hr fire rated V446 gypsum board/steel stud or U341 gypsum board/wood stud Wall and Partition Design in the Fire Resistance Directory. When U341 wall design is used, wall shall be sheathed with 5/8 in. gypsum board, and glass or mineral fiber batt insulation shall be installed in stud cavities in accordance with U341 design. Outlet box secured to steel stud by means of fastening tab supplied with the outlet box. Putty pads shall lap min 1/2 in. onto the stud and gypsum board within the stud cavity. Outlet boxes installed with steel or plastic cover plates. Boxes may be installed back to back.

CP 617 Firestop Putty Pads, for use with max 2-1/4 by 3-3/4 by 2-3/4 in. deep UL Listed Nonmetallic Outlet Boxes manufactured by Pass and Seymore, Inc., and bearing a 2 hr rating under the "Outlet Boxes and Fittings Classification for Fire Resistance" category in the Fire Resistance Directory. Putty pads and boxes for use in 1 and 2 hr fire rated gypsum wallboard assemblies, framed with min 3-1/2 in. deep wood studs and constructed as specified in the individual U300 Series Wall and Partition Designs in the Fire Resistance Directory. Outlet box secured to wood stud by means of two nailing tabs supplied with the outlet box. Putty pads shall lap min 1/2 in. onto the stud and gypsum board within the stud cavity. Outlet boxes installed with steel or plastic cover plates.

CP 617 or CFS-P PA Firestop Putty Pads, for use with max 4 by 3-3/4 by 3 in. deep UL Listed Nonmetallic Outlet Boxes manufactured by Allied Molded Products, Inc., made from fiber reinforced thermoplastic and bearing a 2 hr rating under the "Outlet Boxes and Fittings Classification for Fire Resistance" category in the Fire Resistance Directory. Putty pads and boxes for use in 1 hr fire rated gypsum wallboard assemblies, framed with min 3-1/2 in. deep wood studs and constructed as specified in the individual U300 Series Wall and Partition Designs in the Fire Resistance Directory. Outlet box secured to wood stud by means of two nailing tabs supplied with the outlet box. Putty pads shall lap min 1/2 in. onto the stud and gypsum board within the stud cavity. Outlet boxes installed with plastic cover plates.

Hilti Firestop Systems

Reproduced by HILTI, Inc. Courtesy of Underwriters Laboratories, Inc. December 07, 2016

CP617 / CFS-P PA / FIRESTOP BOX INSERT

Wall Opening Protective Materials (CLIV, CLIV7)

CP 617 or CFS-P PA Firestop Putty Pads, for use with max 4 by 4 in. by 1-1/2 in. deep flush device UL Listed Metallic Outlet Boxes installed with steel cover plates in 1 hr. fire rated gypsum wallboard wall assemblies framed with min 3-1/2 in. deep wood or steel studs and constructed as specified in the individual U300, U400 or V400 Series Wall and Partition Designs in the Fire Resistance Directory. The boxes are installed back to back with 5 in. by 4 in. UL Classified fire block, CP 657 or CFS-BL Firestop Block installed in the cavity between the two boxes.

CP 617 or CFS-P PA Firestop Putty Pads, for use with max 14 by 4 by max 2-1/2 in. flush device UL Listed Metallic Outlet Boxes installed with steel cover plates in 1 and 2 hr. fire rated gypsum board wall assemblies framed with min 5-1/2 in. deep wood or steel studs for 2 hr fire rated walls and min 3-1/2 in. deep wood or steel studs for 1 hr fire rated walls. Walls constructed as specified in the individual U300, U400 or V400 Series Wall and Partition Designs in the Fire Resistance Directory. Stud cavity insulation is required and shall consist of min 5-1/2 in. (2 hr rated walls) or min 3-1/2 in. (1 hr rated walls) thick fiberglass (min 0.8 pcf) or mineral fiber (min 4 pcf). Putty pads shall lap min 1/2 in. onto the stud and gypsum board within the stud cavity. When boxes are interconnected by means of electrical metallic tube (EMT) or conduit, a ball of putty pad material shall be used to completely plug the open end of each EMT or conduit within the box.

CP 617 or CFS-P PA Firestop Putty Pads, for use with max 4-11/16 by 4-11/16 by max 2-1/8 in. flush device UL Listed Metallic Outlet Boxes installed with steel or plastic cover plates for use in 1 and 2 hr fire rated gypsum board wall assemblies framed with min 5-1/2 in. deep steel studs and constructed of the materials and in the manner specified in the individual U400 or V400 Series Wall and Partition Designs in the Fire Resistance Directory. Putty pads shall lap min 1/2 in. onto the stud and gypsum board within the stud cavity. When boxes are interconnected by means of electrical metallic tube (EMT) or conduit, a ball of putty pad material shall be used to completely plug the open end of each EMT or conduit within the outlet boxes. Metallic outlet boxes may be provided with steel attachment brackets which offset box min 1/4 in. from stud. When steel attachment brackets are used, putty pad to be affixed to the back and all four sides of the box.

CFS-P PA Moldable Putty Pads, for use with max 4-11/16 by 4-11/16 in. by max 2-1/8 in. flush device UL Listed Metallic Outlet Boxes installed with steel cover plates in 2 hr fire rated gypsum board wall assemblies framed with min 3-1/2 in. deep steel studs and constructed of the materials and in the manner specified in the individual U400 and V400 Series Wall and Partition Designs in the Fire Resistance Directory. An additional 3/4 in. ball of putty pad material shall be used to plug the end of each electrical metallic tube or conduit at its connection to the box.

CFS-P PA Moldable Putty Pads, for use with max 4 by 4 by 2-1/8 in. flush device UL Listed Metallic Outlet Boxes installed with steel or plastic cover plates in 2 hr fire rated gypsum board wall assemblies framed with min 3-1/2 in. deep steel studs and constructed of the materials and in the manner specified in the individual U400 and V400 Series Wall and Partition Designs in the Fire Resistance Directory. An additional 3/4 in. ball of putty pad material shall be used to plug the end of each electrical metallic tube or conduit at its connection to the box.

CFS-P PA Moldable Putty Pads, for use with max 14-1/4 by 4-1/2 by 2-1/2 in. flush device UL Listed Metallic Outlet Boxes installed with steel cover plates in 2 hr fire rated gypsum board wall assemblies framed with min 3-1/2 in. deep steel studs and constructed of the materials and in the manner specified in the individual U400 and V400 Series Wall and Partition Designs in the Fire Resistance Directory. An additional 3/4 in. ball of putty pad material shall be used to plug the end of each electrical metallic tube or conduit at its connection to the box.

HILTI Firestop Box Insert, for use with flush device UL Listed Metallic Outlet Boxes installed with steel mud rings or UL Listed Nonmetallic Outlet Boxes in framed wall assemblies as specified below. When protective material is used on outlet boxes on both sides of the wall as directed, the horizontal separation between outlet boxes on opposite sides of the wall may be less than 24 in. provided that the boxes are not installed back-to-back (unless otherwise indicated). Installation shall comply with the National Electrical Code (NFPA 70). The box composition, max device dimensions, hourly rating, type of stud and type of faceplate are specified below.

HILTI Firestop Box Insert, for use with max 4-11/16 by 4-11/16 by 2-1/8 in. deep UL Listed Metallic Outlet Boxes without internal clamps in 1 or 2 hr fire rated gypsum wallboard wall assemblies framed with min 3-1/2 in. deep wood or steel studs and constructed of materials and in the manner specified in the individual U300, U400 or V400 Series Wall and Partition Designs in the Fire Resistance Directory. Outlet boxes in 1 hr fire rated walls may be installed with plastic or steel cover plates. Outlet boxes in 2 hr fire rated walls shall be installed with steel cover plates. One 4-3/8 by 4-3/8 in. insert adhered to the interior back wall of the outlet box in accordance with the instructions supplied with the product. Smaller sized inserts may be cut and combined to achieve the 4-3/8 x 4-3/8 in coverage.

HILTI Firestop Box Insert, for use with max 4 by 4 by 1-1/2 in. deep and 2-1/8 in. deep UL Listed Metallic Outlet Boxes without internal clamps in 1 or 2 hr fire rated gypsum wallboard wall assemblies framed with min 3 1/2 in. deep steel or wood studs and constructed of materials and in the manner specified in the individual U400, V400 or U300 Series Wall and Partition Designs in the Fire Resistance Directory, as summarized in the Table below. One 3-11/16 by 3-3/4 in. insert adhered to the interior back wall of the outlet box in accordance with the instructions supplied with the product. Smaller sized inserts may be cut and combined to achieve the 3-11/16 x 3-3/4 in coverage.

Hilti Firestop Systems

Reproduced by HILTI, Inc. Courtesy of Underwriters Laboratories, Inc. December 07, 2016

CP617 / CFS-P PA / FIRESTOP BOX INSERT

Wall Opening Protective Materials (CLIV, CLIV7)

Box Size	Type of Box and Cover Plate	Hourly Rating	Wall Type
4 x 4 x 2-1/8 in deep	Metallic w/ steel cover plates	2-hour	U300, U400 or V400 - wood or steel studs
4 x 4 x 2-1/8 in deep	Metallic w/ plastic cover plates	1-hour	U300, U400 or V400 - wood or steel studs
4 x 4 x 1-1/2 in deep	Metallic w/ plastic cover plates	1-hour	U300 - wood studs

HILTI Firestop Box Insert, for use with max 2 1/8 x 4 x 2 1/8 in. deep UL Listed Metallic Outlet Boxes without internal clamps in 2 hr fire rated gypsum wallboard wall assemblies framed with min 3 1/2 in. deep wood or steel studs and constructed of materials and in the manner specified in the individual U300, U400 or V400 Series Wall and Partition Designs in the Fire Resistance Directory. Outlet boxes may be installed with steel cover plates. One 1-7/8 x 2-13/16 insert adhered to the interior back wall of the outlet box in accordance with the instructions supplied with the product.

HILTI Firestop Box Insert, for use with max 4-1/2 x 8-1/2 in. by 1-5/8 in. deep or max 3-3/4 x 5-1/2 in. by 2-1/2 in deep UL Listed Metallic Outlet Boxes without internal clamps in 1 hr or 2 hr fire rated gypsum wallboard wall assemblies framed with min 3 1/2 in. deep steel or wood studs and constructed of materials and in the manner specified in the individual U400, V400 or U300 Series Wall and Partition Designs in the Fire Resistance Directory, as summarized in the Table below. Outlet boxes installed with steel cover plates. Box inserts evenly spaced and adhered to the interior back wall of the outlet box in accordance with the instructions supplied with the product.

Box Size	Inserts Used	Fire Rating	Wall Type
4-1/2 x 8-1/2 x 1-5/8 in deep	Two 3-11/16 x 3-3/4 in. inserts **	2 hour	U300, U400 or V400 - wood or steel studs
3-3/4 x 5-1/2 x 2-1/2 in deep	One 3-11/16 x 3-3/4 in. insert and one 1-7/8 x 2-13/16 in. insert	1 hour	U300, U400, or V400 - wood or steel studs
** - Min 3/4 in. deep plaster rings installed over outlet box. After installation of gypsum board, nom 1/4 in. thickness of Hilti FS-ONE Sealant or FS-ONE MAX Intumescent Sealant, bearing the UL Classification Marking for Fill, Void or Cavity Materials, applied between the base layer of wallboard and the plaster ring.			

HILTI Firestop Box Insert , for use with 4-3/8 by 4-7/8 by 2-1/4 in. deep flush device UL Listed Metallic Outlet Boxes without internal clamps in 1 hr fire rated gypsum board wall assemblies framed with min 3-1/2 in. deep wood or steel studs and constructed of the materials and in the manner specified in the individual U300, U400 or V400 Series Wall and Partition Designs in the Fire Resistance Directory. One 4-3/8 in. wide by 4-3/8 in. high insert adhered to the interior back wall of the outlet box in accordance with the installation instructions supplied with the product. Smaller sized inserts may be cut and combined to achieve the 4-3/8 in. by 4-3/8 in. coverage and adhered to the interior back wall of the outlet box. Outlet boxes installed with steel or plastic cover plates.

HILTI Firestop Box Insert, for use with 4-3/8 by 4-7/8 by 2-1/4 in. deep flush device UL Listed Metallic Outlet Boxes without internal clamps in 2 hr fire rated gypsum board wall assemblies framed with min 3-1/2 in. deep wood or steel studs and constructed of the materials and in the manner specified in the individual U300, U400 or V400 Series Wall and Partition Designs in the Fire Resistance Directory. One 4-3/8 in. wide by 4-3/8 in. high insert adhered to the interior back wall of the outlet box in accordance with the installation instructions supplied with the product. Smaller sized inserts may be cut and combined to achieve the 4-3/8 in. by 4-3/8 in. coverage and adhered to the interior back wall of the outlet box. Outlet boxes installed with steel cover plates.

CP 617 or CFS-P PA Firestop Putty Pads and HILTI Firestop Box Inserts, for use with maximum 4 by 4 by 1-1/2 in. (102 by 102 by 38 mm) deep flush device UL Listed Metallic Outlet Boxes installed with steel mud rings and with steel or plastic faceplates in 1 or 2 hr fire rated gypsum board wall assemblies constructed with min 3-1/2 in. (89 mm) wide wood or steel studs. When both protective materials are used with outlet boxes on both sides of the wall as directed, the boxes may be installed back-to-back provided that the backs of the boxes are minimum 1/2 in. (13 mm) apart and provided that the boxes are not interconnected. Adjoining pieces of moldable putty pads to be overlapped approx 1/2 in. (13 mm) at the seam. An insert pad shall be installed to completely cover the back inside surface of each outlet box.

Hilti Firestop Systems

Reproduced by HILTI, Inc. Courtesy of Underwriters Laboratories, Inc. December 07, 2016

CP617 / CFS-P PA / FIRESTOP BOX INSERT

CLAYTON COUNTY LIBRARY SYSTEM

RIVERDALE LIBRARY ADDITION

420 Valley Hill Rd, Riverdale, GA 30274

HAMMOND ENGINEERING, INC
CONSULTING ENGINEERS
6961 PEACHTREE INDUSTRIAL BLVD. #208
NORCROSS, GEORGIA, 30092
TEL: (678)292-6937
NATHANIEL D. HAMMOND P.E.
MECHANICAL/ELECTRICAL ENGINEER
P.E. #047450

© 2025 - THESE DOCUMENTS REMAIN THE PROPERTY OF THE ARCHITECT AND MAY NOT BE USED, OR REPRODUCED WITHOUT WRITTEN PERMISSION.

RELEASED FOR CONSTRUCTION

Revisions

No.	Date	Description
	03/19/2025	50% SET
	03/28/2025	100% SET
	03/31/2025	100% SET
	06/10/2025	100% SET

GEORGIA REGISTERED PROFESSIONAL ENGINEER No. PE047450 NATHANIEL D. HAMMOND

06/10/2025

Gardner Spencer Smith Tench & Jarbeau
A Professional Corporation for the Practice of Architecture
www.gsstj.com

50 Hurt Plaza SW,
Suite 1100
Atlanta, Georgia
30303
404.522.8805
404.521.2118 (F)

PROJECT NO.
24105

SHEET TITLE
HILTI FIRE STOP DETAILS

FIRE STOP BOX INSERT | N.T.S. | 1

SHEET NO.
E0.02E

LIGHTING FIXTURE SCHEDULE

TYPE MARK	DESCRIPTION	MANUFACTURER	MODEL	VOLTAGE	LUMENS	WATTAGE	LAMP	COMMENTS
A1	LED CENTER ELEMENT TROFFER	LITHONIA LIGHTING	STAK 2X4 4000LM 80CRI 40K COLT MIN10 ZT MVOLT	120 - 277 V	4000 LM	33.2 W	LED	CONFIRM TYPE AND LOCATION WITH OWNER PRIOR TO ROUGHIN
A1E	LED CENTER ELEMENT TROFFER PROVIDE 10W EMERGENCY BATTERY	LITHONIA LIGHTING	STAK 2X4 4000LM 80CRI 40K COLT MIN10 ZT MVOLT E10W	120 - 277 V	4000 LM	33.2 W	LED	CONFIRM TYPE AND LOCATION WITH OWNER PRIOR TO ROUGHIN
B1	LED CENTER ELEMENT TROFFER	LITHONIA LIGHTING	STAK 2X2 4000LM 80CRI 40K COLT MIN10 ZT MVOLT	120 - 277 V	4000 LM	33.3 W	LED	CONFIRM TYPE AND LOCATION WITH OWNER PRIOR TO ROUGHIN
B1E	LED CENTER ELEMENT TROFFER PROVIDE 10W EMERGENCY BATTERY	LITHONIA LIGHTING	STAK 2X2 4000LM 80CRI 40K COLT MIN10 ZT MVOLT E10W	120 - 277 V	4000 LM	33.3 W	LED	CONFIRM TYPE AND LOCATION WITH OWNER PRIOR TO ROUGHIN
C1E	LED SUSPENDED LIGHT PROVIDE EMERGENCY BATTERY	LUMENWERX	Via1.5 Pendant Indirect	120 - 277 V	131 LM	17.8 W	LED	CONFIRM TYPE AND LOCATION WITH OWNER PRIOR TO ROUGHIN
D1	6" ROUND DOWNLIGHT	GOTHAM	IVO6S D 05LM 40K 80CRI MD MVOLT ZT	120 - 277 V	500 LM	22.4 W	LED	CONFIRM TYPE AND LOCATION WITH OWNER PRIOR TO ROUGHIN
D1E	6" ROUND DOWNLIGHT PROVIDE 6W EMERGENCY BATTERY	GOTHAM	IVO6S D 05LM 40K 80CRI MD MVOLT ZT E6WR	120 - 277 V	500 LM	22.4 W	LED	CONFIRM TYPE AND LOCATION WITH OWNER PRIOR TO ROUGHIN
HE	OUTDOOR SCONCE PROVIDE INTEGRAL 1.5 HOUR EMERGENCY BATTERY	LITHONIA LIGHTING	WDGE2 LED P3 30K 80CRI T3M MVTOL SRM E10WH PE	120 - 277 V	3015LM 2022 CM	23 W	LED	CONFIRM TYPE AND LOCATION WITH OWNER PRIOR TO ROUGHIN
X	EXIT SIGN PROVIDE INTEGRAL 1.5 HOUR EMERGENCY BATTERY	EIT	EM-ELC-R-WC	120 - 277 V	N/A	2.4 W	LED	EXIT SIGN EMERGENCY LIGHTING RED LETTERS W REMOTE COMPATABILITY

2

COM*check* Software Version 4.1.5.5

Interior Lighting Compliance Certificate

Project Information

Energy Code: 2015 IECC
Project Title: Riverdale Library
Project Type: New Construction

Construction Site:
420 Valley Hill Road
Riverdale, GA 30274

Owner/Agent:

Designer/Contractor:

Additional Efficiency Package(s)

Credits: 1.0 Required 1.0 Proposed
Reduced Lighting Power, 1.0 credit

Allowed Interior Lighting Power

A Area Category	B Floor Area (ft2)	C Allowed Watts / ft2	D Allowed Watts (B X C)
1-Library	3750	1.07	4016
		Total Allowed Watts =	4016

Proposed Interior Lighting Power

A Fixture ID : Description / Lamp / Wattage Per Lamp / Ballast	B Lamps/ Fixture	C # of Fixtures	D Fixture Watt.	E (C X D)
1-Library				
Lighting Fixture - A1/A1E: Other:	1	29	33	957
Lighting Fixture - B1/B1E: Other:	1	24	33	792
Lighting Fixture - D1/D1E: Other:	1	5	23	115
Lighting Fixture - C1E: Other:	1	1	18	18
			Total Proposed Watts =	1882

Interior Lighting PASSES: Design 53% better than code

Interior Lighting Compliance Statement

Compliance Statement: The proposed interior lighting design represented in this document is consistent with the building plans, specifications, and other calculations submitted with this permit application. The proposed interior lighting systems have been designed to meet the 2015 IECC requirements in COM*check* Version 4.1.5.5 and to comply with any applicable mandatory requirements listed in the Inspection Checklist.

Electrical design engineer — Name - Title
Signature
3/28/2025 — Date

Project Title: Riverdale Library — Report date: 03/28/25

COM*check* Software Version 4.1.5.5

Exterior Lighting Compliance Certificate

Project Information

Energy Code: 2015 IECC
Project Title: Riverdale Library
Project Type: New Construction
Exterior Lighting Zone 3 (Other (LZ3))

Construction Site:
420 Valley Hill Road
Riverdale, GA 30274

Owner/Agent:

Designer/Contractor:

Allowed Exterior Lighting Power

A Area/Surface Category	B Quantity	C Allowed Watts / Unit	D Tradable Wattage	E Allowed Watts (B X C)
Stairway	550 ft2	1	Yes	550
Entry canopy	400 ft2	0.4	Yes	160
			Total Tradable Watts (a) =	710
			Total Allowed Watts =	710
			Total Allowed Supplemental Watts (b) =	750

(a) Wattage tradeoffs are only allowed between tradable areas/surfaces.
(b) A supplemental allowance equal to 750 watts may be applied toward compliance of both non-tradable and tradable areas/surfaces.

Proposed Exterior Lighting Power

A Fixture ID : Description / Lamp / Wattage Per Lamp / Ballast	B Lamps/ Fixture	C # of Fixtures	D Fixture Watt.	E (C X D)
Stairway (550 ft2): Tradable Wattage				
Lighting Fixture - D1/D1E: Other:	1	4	23	92
Entry canopy (400 ft2): Tradable Wattage				
Lighting Fixture - HE: Other:	1	2	22	44
			Total Tradable Proposed Watts =	136

Exterior Lighting PASSES: Design 91% better than code

Exterior Lighting Compliance Statement

Compliance Statement: The proposed exterior lighting design represented in this document is consistent with the building plans, specifications, and other calculations submitted with this permit application. The proposed exterior lighting systems have been designed to meet the 2015 IECC requirements in COM*check* Version 4.1.5.5 and to comply with any applicable mandatory requirements listed in the Inspection Checklist.

Electrical design engineer — Name - Title
Signature
3/25/2025 — Date

Project Title: Riverdale Library — Report date: 03/28/25

CLAYTON COUNTY LIBRARY SYSTEM

RIVERDALE LIBRARY ADDITION

420 Valley Hill Rd, Riverdale, GA 30274

HAMMOND ENGINEERING, INC
CONSULTING ENGINEERS
6961 PEACHTREE INDUSTRIAL BLVD. #208
NORCROSS, GEORGIA, 30092
TEL: (678)292-6937
NATHANIEL D. HAMMOND P.E.
MECHANICAL/ELECTRICAL ENGINEER
P.E. #047450

© 2025 THESE DOCUMENTS REMAIN THE PROPERTY OF THE ARCHITECT AND MAY NOT BE USED OR REPRODUCED WITHOUT WRITTEN PERMISSION.

RELEASED FOR CONSTRUCTION

Revisions

No.	Date	Description
	03/19/2025	50% SET
	03/28/2025	100% SET
	03/31/2025	100% SET
	06/10/2025	100% SET
2	03/06/2026	Revision 2

GEORGIA REGISTERED PROFESSIONAL ENGINEER NATHANIEL D. HAMMOND

06/10/2025

Gardner Spencer Smith Tench & Jarbeau
A Professional Corporation for the Practice of Architecture
www.gsstj.com
50 Hurt Plaza SW, Suite 1100
Atlanta, Georgia 30303
404.522.8805
404.521.2118 (F)

PROJECT NO.
24105

SHEET TITLE
LIGHTING FIXTURE SCHEDULE

SHEET NO.
E0.03

1 **ELECTRICAL SITE PLAN DND**
SCALE: 1/8" = 1'-0"

1/8" = 1'-0" 4 0 4 8 16
SCALE FEET

FLOOR PLANS GENERAL NOTES

1. PROVIDE UN-SWITCHED HOT FROM SAME AREA NORMAL POWER SERVING LIGHTS TO EXIT AND EGRESS LIGHT FIXTURES BATTERY CHARGING CIRCUIT(S).
2. DO NOT INSTALL DEVICES BACK TO BACK IN ANY FIRE RATED WALL. PROVIDE MINIMUM 24" HORIZONTAL SPACE BETWEEN SUCH OUTLETS.
3. SEAL ALL PENETRATIONS IN EVERY FIRE RATED WALL AND FLOOR PER U.L. TO MAINTAIN T HE WALL AND FLOOR ORIGINAL RATING.
4. FINAL LIGHTING LOCATIONS AND SELECTIONS TO BE DETERMINED BY ARCHITECT/INTERIOR DESIGNER.
5. FOR 120V BRANCH CIRCUITS, PROVIDE #10 CONDUCTORS FOR ANY CIRCUIT OVER 70' AND # 8 CONDUCTORS FOR ANY CIRCUIT OVER 150'.
6. PROVIDE CONNECTION TO FIRE ALARM CONTROL PANEL FROM ALL FIRE ALARM DEVICES.
7. TYPE N.M. WIRING FOR BRANCH CIRCUIT WIRING FOR TYPE III, IV AND V CONSTRUCTION IF ACCEPTABLE TO LOCAL AUTHORITY HAVING JURISDICTION. PROVIDE M.C. CABLE OR WIRE/EMT CONDUIT FOR BRANCH CIRCUITS IN ALL OTHER CONSTRUCTION TYPES AND IN RETURN AIR PLENUM ROOMS OR SPACES. ALL EXPOSED WIRING TO BE WIRE IN CONDUIT. ALL WIRING IN AMENITIES SPACES, WITH 100 OR MORE CODE OCCUPANY, TO HAVE MC CABLE FOR BRANCH CIRCUIT WIRING.
8. COORDINATE LOCATION AND QUANTITY OF FIRE/SMOKE AND/OR SMOKE DAMPERS WITH MECHANICAL CONTRACTOR PRIOR TO BID. COORDINATION OF LOCATIONS AND QUANTITIES WILL OVERRIDE LOCATIONS AND QUANTITIES INDICATED ON ELECTRICAL DRAWINGS. PROVIDE A 120V UN-SWITCHED CIRCUIT TO EACH FIRE/SMOKE DAMPER AND/OR SMOKE DAMPER. PROVIDE A DUCT MOUNTED SMOKE DETECTOR IN FIRE/SMOKE DAMPER SHAFT. CONNECT DUCT MOUNTED SMOKE DETECTOR AND FIRE/SMOKE AND/OR SMOKE DAMPER TO FIRE ALARM SYSTEM. A CHANGE ORDER WILL NOT BE ALLOWED FOR LACK OF COORDINATION BETWEEN THE ELECTRICAL AND MECHANICAL CONTRACTOR FOR LOCATION AND QUANTITY OF FIRE/SMOKE DAMPER AND/OR SMOKE DAMPERS.
9. MOTORIZED DAMPERS SHALL BE POWERED FROM THE NEAREST UN-SWITCHED RECEPTACLE CIRCUIT.
10. (#) INDICATES ITEM NUMBER FOR HVAC UNIT. SEE E-601 FOR MECHANICAL CONNECTION SCHEDULE
11. COORDINATE FINAL RECEPTACLE LOCATIONS AND HORIZONTAL MOUNTING DIRECTION WITH ARCHITECT/INTERIOR DESIGNER PRIOR TO ROUGH IN..

FLOOR PLANS KEY NOTES

1. PROVIDE ELECTRICAL CONNECTION FOR ELECTRICAL WALL HEATER MOUNTED IN CEILIN
2. -
3. -

CLAYTON COUNTY LIBRARY SYSTEM

RIVERDALE LIBRARY ADDITION

420 Valley Hill Rd, Riverdale, GA 30274

HAMMOND ENGINEERING, INC
CONSULTING ENGINEERS
6961 PEACHTREE INDUSTRIAL BLVD. #208
NORCROSS, GEORGIA, 30092
TEL: (678)292-6937
NATHANIEL D. HAMMOND P.E.
MECHANICAL/ELECTRICAL ENGINEER
P.E. #047450

© 2025 THESE DOCUMENTS REMAIN THE PROPERTY OF THE ARCHITECT AND MAY NOT BE USED, OR REPRODUCED WITHOUT WRITTEN PERMISSION.

RELEASED FOR CONSTRUCTION

Revisions

No.	Date	Description
	03/19/2025	50% SET
	03/28/2025	100% SET
	03/31/2025	100% SET
	06/10/2025	100% SET

GEORGIA REGISTERED PROFESSIONAL ENGINEER PE047450 NATHANIEL D. HAMMOND

06/10/2025

Gardner Spencer Smith Tench & Jarbeau
A Professional Corporation
for the Practice of Architecture
www.gsstj.com

50 Hurt Plaza SW,
Suite 1100
Atlanta, Georgia
30303
404.522.8805
404.521.2118 (F)

PROJECT NO.
24105

SHEET TITLE
ELECTRICAL SITE PLAN

SHEET NO.
E1.00

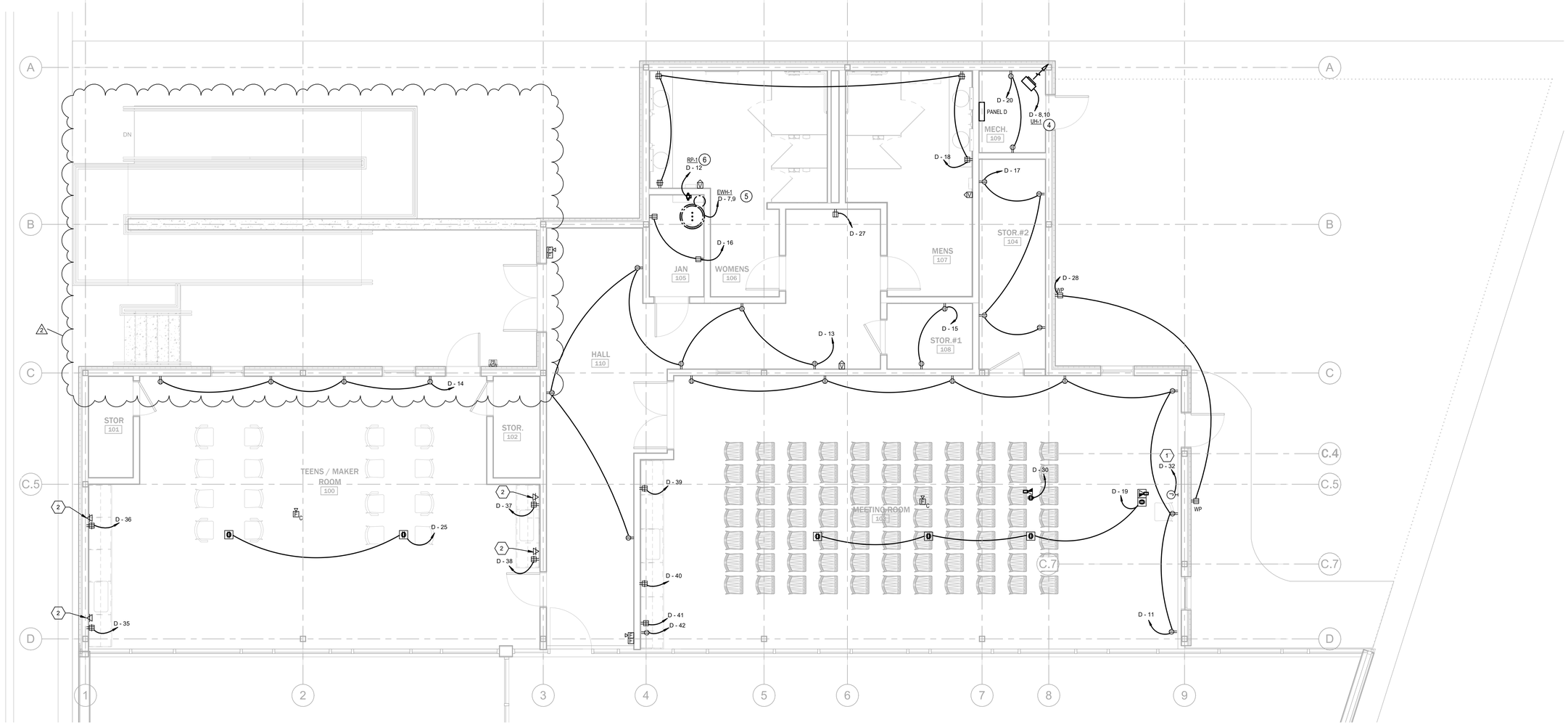

1 ELECTRICAL FLOOR POWER PLAN 2

SCALE: 1/4" = 1'-0"

1/4" = 1'-0" 2 0 2 4 8 SCALE FEET

FLOOR PLANS GENERAL NOTES

1. PROVIDE UN-SWITCHED HOT FROM SAME AREA NORMAL POWER SERVING LIGHTS TO EXIT AND EGRESS LIGHT FIXTURES BATTERY CHARGING CIRCUIT(S).
2. DO NOT INSTALL DEVICES BACK TO BACK IN ANY FIRE RATED WALL. PROVIDE MINIMUM 24" HORIZONTAL SPACE BETWEEN SUCH OUTLETS.
3. SEAL ALL PENETRATIONS IN EVERY FIRE RATED WALL AND FLOOR PER U.L. TO MAINTAIN THE WALL AND FLOOR ORIGINAL RATING.
4. FINAL LIGHTING LOCATIONS AND SELECTIONS TO BE DETERMINED BY ARCHITECT/INTERIOR DESIGNER.
5. FOR 120V BRANCH CIRCUITS, PROVIDE #10 CONDUCTORS FOR ANY CIRCUIT OVER 70' AND # 8 CONDUCTORS FOR ANY CIRCUIT OVER 150'.
6. PROVIDE CONNECTION TO FIRE ALARM CONTROL PANEL FROM ALL FIRE ALARM DEVICES.
7. TYPE N.M. WIRING FOR BRANCH CIRCUIT WIRING FOR TYPE III, IV AND V CONSTRUCTION IF ACCEPTABLE TO LOCAL AUTHORITY HAVING JURISDICTION. PROVIDE M.C. CABLE OR WIRE/EMT CONDUIT FOR BRANCH CIRCUITS IN ALL OTHER CONSTRUCTION TYPES AND IN RETURN AIR PLENUM ROOMS OR SPACES. ALL EXPOSED WIRING TO BE WIRE IN CONDUIT. ALL WIRING IN ALL OTHER SPACES, WITH 100 OR MORE CODE OCCUPANCY, TO HAVE MC CABLE FOR BRANCH CIRCUIT WIRING.
8. COORDINATE LOCATION AND QUANTITY OF FIRE/SMOKE AND/OR SMOKE DAMPERS WITH MECHANICAL CONTRACTOR PRIOR TO BID. COORDINATION OF LOCATIONS AND QUANTITIES WILL OVERRIDE LOCATIONS AND QUANTITIES INDICATED ON ELECTRICAL DRAWINGS. PROVIDE A 120V UN-SWITCHED CIRCUIT TO EACH FIRE/SMOKE DAMPER AND/OR SMOKE DAMPER. PROVIDE A DUCT MOUNTED SMOKE DETECTOR IN FIRE/SMOKE DAMPER SHAFT. CONNECT DUCT MOUNTED SMOKE DETECTOR AND FIRE/SMOKE AND/OR SMOKE DAMPER TO FIRE ALARM SYSTEM. A CHANGE ORDER WILL NOT BE ALLOWED FOR LACK OF COORDINATION BETWEEN THE ELECTRICAL AND MECHANICAL CONTRACTOR FOR LOCATION AND QUANTITY OF FIRE/SMOKE DAMPER AND/OR SMOKE DAMPERS.
9. MOTORIZED DAMPERS SHALL BE POWERED FROM THE NEAREST UN-SWITCHED RECEPTACLE CIRCUIT.
10. (#) INDICATES ITEM NUMBER FOR HVAC UNIT. SEE E6.00 FOR MECHANICAL CONNECTION SCHEDULE
11. COORDINATE FINAL RECEPTACLE LOCATIONS AND HORIZONTAL MOUNTING DIRECTION WITH ARCHITECT/INTERIOR DESIGNER PRIOR TO ROUGH IN..

FLOOR PLAN KEYNOTES

1. CONTRACTOR IS TO PROVIDE ELECTRICAL CONNECTION FOR PROJECTOR SCREEN. COORDINATE HEIGHT AND ALL POWER REQUIREMENTS WITH MANUFACTURER PRIOR TO ROUGH-IN.
2. CONTRACTOR IS TO PROVIDE TWO PORT DATA OUTLETS.

CLAYTON COUNTY LIBRARY SYSTEM

RIVERDALE LIBRARY ADDITION

420 Valley Hill Rd, Riverdale, GA 30274

HAMMOND ENGINEERING, INC
CONSULTING ENGINEERS
6961 PEACHTREE INDUSTRIAL BLVD. #208
NORCROSS, GEORGIA, 30092
TEL: (678)292-6937
NATHANIEL D. HAMMOND P.E.
MECHANICAL/ELECTRICAL ENGINEER
P.E. #047450

© 2025 THESE DOCUMENTS REMAIN THE PROPERTY OF THE ARCHITECT AND MAY NOT BE USED OR REPRODUCED WITHOUT WRITTEN PERMISSION.

RELEASED FOR CONSTRUCTION

Revisions

No.	Date	Description
	03/19/2025	50% SET
	03/28/2025	100% SET
	03/31/2025	100% SET
	06/10/2025	100% SET
2	03/06/2026	Revision 2

GEORGIA REGISTERED PROFESSIONAL ENGINEER NATHANIEL D. HAMMOND P.E. #047450

06/10/2025

Gardner Spencer Smith Tench & Jarbeau
A Professional Corporation for the Practice of Architecture
www.gsstj.com

50 Hurt Plaza SW,
Suite 1100
Atlanta, Georgia
30303
404.522.8805
404.521.2118 (F)

PROJECT NO.

24105

SHEET TITLE

ELECTRICAL FLOOR POWER PLAN

SHEET NO.

E1.10

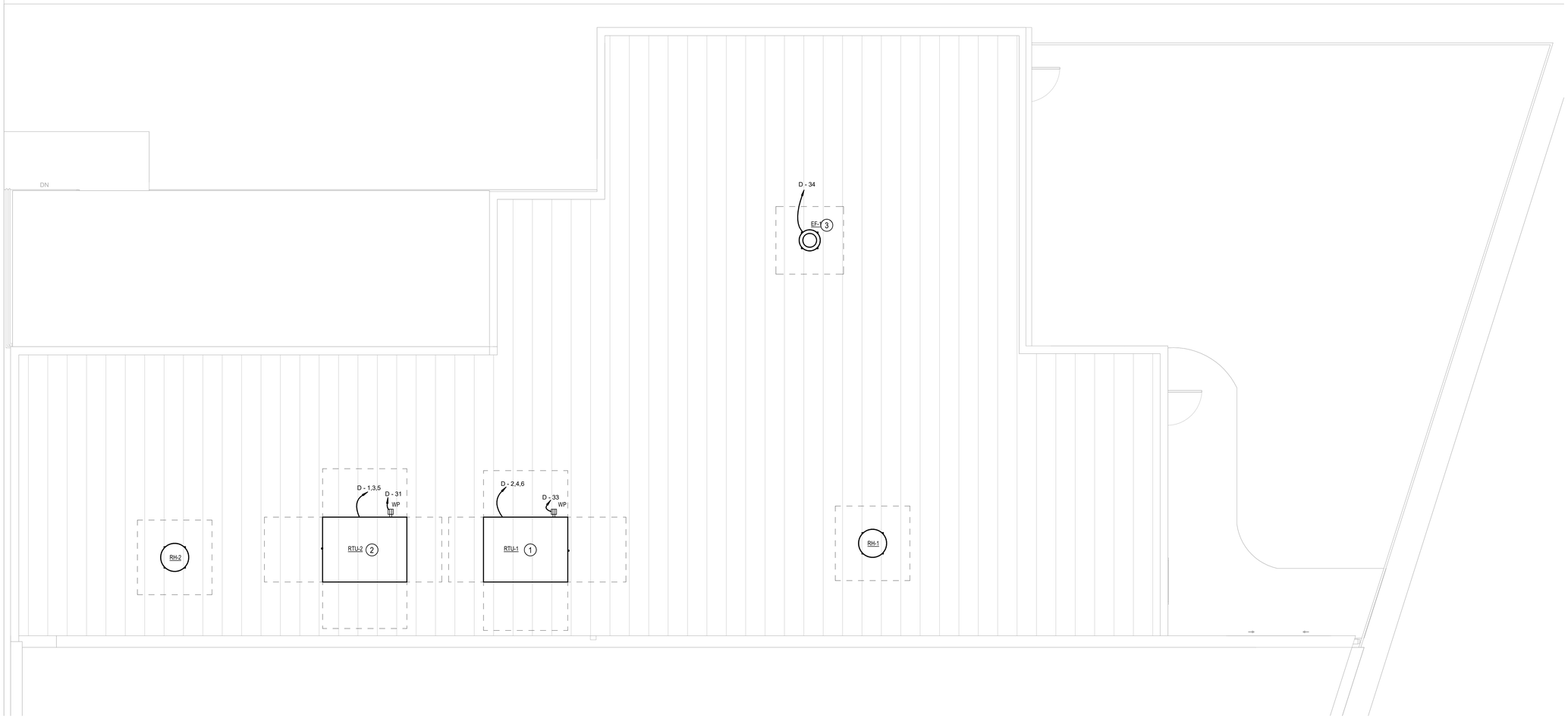

1 ELECTRICAL ROOF POWER PLAN

SCALE: 1/4" = 1'-0"

1/4" = 1'-0" 2 0 2 4 8 SCALE FEET

FLOOR PLANS GENERAL NOTES

1. PROVIDE UN-SWITCHED HOT FROM SAME AREA NORMAL POWER SERVING LIGHTS TO EXIT AND EGRESS LIGHT FIXTURES BATTERY CHARGING CIRCUIT(S).
2. DO NOT INSTALL DEVICES BACK TO BACK IN ANY FIRE RATED WALL. PROVIDE MINIMUM 24" HORIZONTAL SPACE BETWEEN SUCH OUTLETS.
3. SEAL ALL PENETRATIONS IN EVERY FIRE RATED WALL AND FLOOR PER U.L. TO MAINTAIN THE WALL AND FLOOR ORIGINAL RATING.
4. FINAL LIGHTING LOCATIONS AND SELECTIONS TO BE DETERMINED BY ARCHITECT/INTERIOR DESIGNER.
5. FOR 120V BRANCH CIRCUITS, PROVIDE #10 CONDUCTORS FOR ANY CIRCUIT OVER 70' AND # 8 CONDUCTORS FOR ANY CIRCUIT OVER 150'.
6. PROVIDE CONNECTION TO FIRE ALARM CONTROL PANEL FROM ALL FIRE ALARM DEVICES.
7. TYPE N.M. WIRING FOR BRANCH CIRCUIT WIRING FOR TYPE III, IV AND V CONSTRUCTION IF ACCEPTABLE TO LOCAL AUTHORITY HAVING JURISDICTION. PROVIDE M.C. CABLE OR WIRE/EMT CONDUIT FOR BRANCH CIRCUITS IN ALL OTHER CONSTRUCTION TYPES AND IN RETURN AIR PLENUM ROOMS OR SPACES. ALL EXPOSED WIRING TO BE WIRE IN CONDUIT. ALL WIRING IN ALL OTHER SPACES, WITH 100 OR MORE CODE OCCUPANCY, TO HAVE MC CABLE FOR BRANCH CIRCUIT WIRING.
8. COORDINATE LOCATION AND QUANTITY OF FIRE/SMOKE AND/OR SMOKE DAMPERS WITH MECHANICAL CONTRACTOR PRIOR TO BID. COORDINATION OF LOCATIONS AND QUANTITIES WILL OVERRIDE LOCATIONS AND QUANTITIES INDICATED ON ELECTRICAL DRAWINGS. PROVIDE A 120V UN-SWITCHED CIRCUIT TO EACH FIRE/SMOKE DAMPER AND/OR SMOKE DAMPER. PROVIDE A DUCT MOUNTED SMOKE DETECTOR IN FIRE/SMOKE DAMPER SHAFT. CONNECT DUCT MOUNTED SMOKE DETECTOR AND FIRE/SMOKE AND/OR SMOKE DAMPER TO FIRE ALARM SYSTEM. A CHANGE ORDER WILL NOT BE ALLOWED FOR LACK OF COORDINATION BETWEEN THE ELECTRICAL AND MECHANICAL CONTRACTOR FOR LOCATION AND QUANTITY OF FIRE/SMOKE DAMPER AND/OR SMOKE DAMPERS.
9. MOTORIZED DAMPERS SHALL BE POWERED FROM THE NEAREST UN-SWITCHED RECEPTACLE CIRCUIT.
10. (#) INDICATES ITEM NUMBER FOR HVAC UNIT. SEE E6.00 FOR MECHANICAL CONNECTION SCHEDULE
11. COORDINATE FINAL RECEPTACLE LOCATIONS AND HORIZONTAL MOUNTING DIRECTION WITH ARCHITECT/INTERIOR DESIGNER PRIOR TO ROUGH IN..

FLOOR PLAN KEYNOTES

1. CONTRACTOR IS TO PROVIDE ELECTRICAL CONNECTION FOR PROJECTOR SCREEN. COORDINATE HEIGHT AND ALL POWER REQUIREMENTS WITH MANUFACTURER PRIOR TO ROUGH-IN.
2. CONTRACTOR IS TO PROVIDE TWO PORT DATA OUTLETS.

CLAYTON COUNTY LIBRARY SYSTEM

RIVERDALE LIBRARY ADDITION

420 Valley Hill Rd, Riverdale, GA 30274

HAMMOND ENGINEERING, INC
CONSULTING ENGINEERS
6961 PEACHTREE INDUSTRIAL BLVD. #208
NORCROSS, GEORGIA, 30092
TEL: (678)292-6937
NATHANIEL D. HAMMOND P.E.
MECHANICAL/ELECTRICAL ENGINEER
P.E. #047450

© 2025 - THESE DOCUMENTS REMAIN THE PROPERTY OF THE ARCHITECT AND MAY NOT BE USED OR REPRODUCED WITHOUT WRITTEN PERMISSION.

RELEASED FOR CONSTRUCTION

Revisions

No.	Date	Description
	03/19/2025	50% SET
	03/28/2025	100% SET
	03/31/2025	100% SET
	06/10/2025	100% SET

GEORGIA REGISTERED PROFESSIONAL ENGINEER NATHANIEL D. HAMMOND PE047450

06/10/2025

Gardner Spencer Smith Tench & Jarbeau
A Professional Corporation for the Practice of Architecture
www.gsstj.com

50 Hurt Plaza SW,
Suite 1100
Atlanta, Georgia
30303
404.522.8805
404.521.2118 (F)

PROJECT NO.

24105

SHEET TITLE

ELECTRICAL ROOF POWER PLAN

SHEET NO.

E1.20

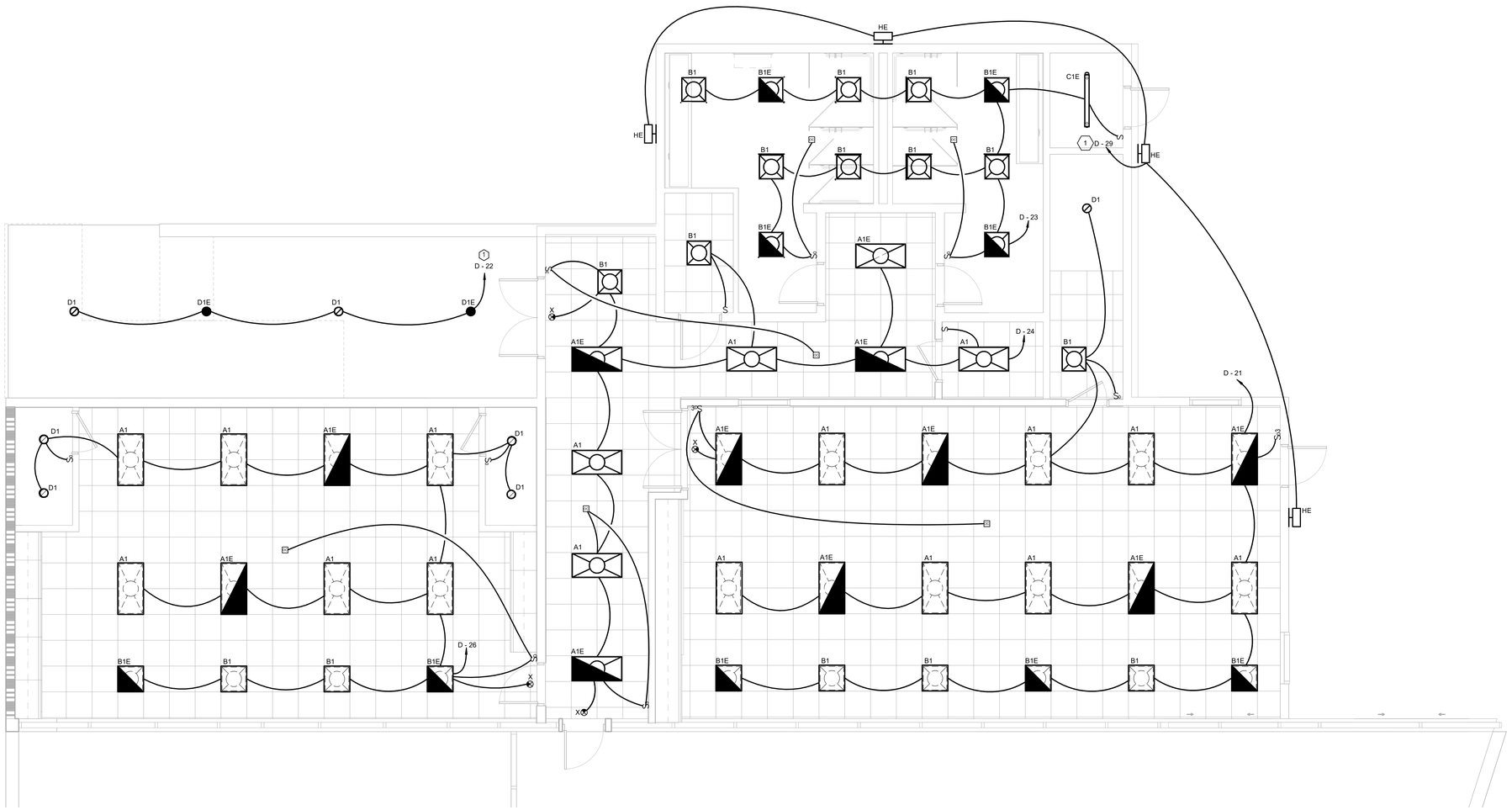

1 ELECTRICAL LIGHTING CEILING PLAN

SCALE: 1/4" = 1'-0"

1/4" = 1'-0" 2 0 2 4 8 SCALE FEET

FLOOR PLANS GENERAL NOTES

1. DO NOT INSTALL DEVICES BACK TO BACK IN ANY FIRE RATED WALL. PROVIDE MINIMUM 24" HORIZONTAL SPACE BETWEEN SUCH OUTLETS.
2. SEAL ALL PENETRATIONS IN EVERY FIRE RATED WALL AND FLOOR PER U.L. TO MAINTAIN THE WALL AND FLOOR ORIGINAL RATING.
3. FINAL LIGHTING LOCATIONS AND SELECTIONS TO BE DETERMINED BY ARCHITECT/INTERIOR DESIGNER.
4. FOR 120V BRANCH CIRCUITS, PROVIDE #10 CONDUCTORS FOR ANY CIRCUIT OVER 70' AND # 8 CONDUCTORS FOR ANY CIRCUIT OVER 150'.
5. PROVIDE CONNECTION TO FIRE ALARM CONTROL PANEL FROM ALL FIRE ALARM DEVICES.
6. TYPE N.M. WIRING FOR BRANCH CIRCUIT WIRING FOR TYPE III, IV AND V CONSTRUCTION IF ACCEPTABLE TO LOCAL AUTHORITY HAVING JURISDICTION. PROVIDE M.C. CABLE OR WIRE/EMT CONDUIT FOR BRANCH CIRCUITS IN ALL OTHER CONSTRUCTION TYPES AND IN RETURN AIR PLENUM ROOMS OR SPACES. ALL EXPOSED WIRING TO BE WIRE IN CONDUIT. ALL WIRING IN OTHER SPACES, WITH 100 PEOPLE OR MORE CODE OCCUPANCY (COORDINATE WITH ARCHITECT PRIOR TO BID), TO HAVE MC CABLE FOR BRANCH CIRCUIT WIRING.
7. COORDINATE LOCATION AND QUANTITY OF FIRE/SMOKE AND/OR SMOKE DAMPERS WITH MECHANICAL CONTRACTOR PRIOR TO BID. COORDINATION OF LOCATIONS AND QUANTITIES WILL OVERRIDE LOCATIONS AND QUANTITIES INDICATED ON ELECTRICAL DRAWINGS. PROVIDE A 120V UN-SWITCHED CIRCUIT TO EACH FIRE/SMOKE DAMPER AND/OR SMOKE DAMPER. PROVIDE A DUCT MOUNTED SMOKE DETECTOR IN FIRE/SMOKE DAMPER SHAFT. CONNECT DUCT MOUNTED SMOKE DETECTOR AND FIRE/SMOKE AND/OR SMOKE DAMPER TO FIRE ALARM SYSTEM. A CHANGE ORDER WILL NOT BE ALLOWED FOR LACK OF COORDINATION BETWEEN THE ELECTRICAL AND MECHANICAL CONTRACTOR FOR LOCATION AND QUANTITY OF FIRE/SMOKE DAMPER AND/OR SMOKE DAMPERS.
8. ALL DOWNLIGHT FIXTURES ARE TYPE 'D1"DE'.
9. ALL 1' BY 4' PENDANT FIXTURES ARE TYPE 'C1E'.
10. ALL EXIT SIGNS ARE TYPE 'X'.
11. ALL 2' BY 4' FIXTURES ARE TYPE 'A1"A1E'
12. ALL 2' BY 2' FIXTURES ARE TYPE 'B1"B1E'

FLOOR PLANS KEY NOTES

1 - CONTRACTOR IS TO ROUTE EXTERIOR LIGHTING THROUGH TIMECLOCK/PHOTOCELL

CLAYTON COUNTY LIBRARY SYSTEM

RIVERDALE LIBRARY ADDITION

420 Valley Hill Rd, Riverdale, GA 30274

HAMMOND ENGINEERING, INC
CONSULTING ENGINEERS
6961 PEACHTREE INDUSTRIAL BLVD. #208
NORCROSS, GEORGIA, 30092
TEL: (678)292-6937
NATHANIEL D. HAMMOND P.E.
MECHANICAL/ELECTRICAL ENGINEER
P.E. #047450

RELEASED FOR CONSTRUCTION

Revisions

No.	Date	Description
	03/19/2025	50% SET
	03/28/2025	100% SET
	03/31/2025	100% SET
	06/10/2025	100% SET

GEORGIA REGISTERED PROFESSIONAL ENGINEER PE047450 NATHANIEL D. HAMMOND

06/10/2025

Gardner Spencer Smith Tench & Jarbeau
A Professional Corporation
for the Practice of Architecture
www.gsstj.com

50 Hurt Plaza SW,
Suite 1100
Atlanta, Georgia
30303
404.522.8805
404.521.2118 (F)

PROJECT NO.

24105

SHEET TITLE

ELECTRICAL LIGHTING CEILING PLAN

SHEET NO.

E1.30

© 2025 - THESE DOCUMENTS REMAIN THE PROPERTY OF THE ARCHITECT AND MAY NOT BE USED, OR REPRODUCED WITHOUT WRITTEN PERMISSION.

PANELBOARD "D" SCHEDULE

VOLTS: 120/208 Wye
PHASES: 3
WIRE: 4

BUS: 225 A
MAIN: 225 A
SCCR: 11,672

MOUNTING: Surface
SECTIONS:
LOCATION: SUPPORT S156

NOTES:
*GFCI BREAKER

LOAD DESCRIPTION	CB TRIP / POLES		CKT #	A		B		C		CKT #	CB TRIP / POLES		LOAD DESCRIPTION
RTU-2	90 A	3	1	7.9	7.9					2	3	90 A	RTU-1
--	--	--	3			7.9	7.9			4	--	--	--
--	--	--	5					7.9	7.9	6	--	--	--
EWH-1	60 A	2	7	4.5	1.5					8	2	20 A	UH-1
--	--	--	9			4.5	1.5			10	--	--	--
REC- MEETING ROOM	20 A	1	11					1.1	0.3	12	1	15 A	RP-1
REC- HALL	20 A	1	13	1.1	0.7					14	1	20 A	REC- TEENS/MAKER ROOM
REC- STORAGE #1	20 A	1	15			0.4	0.4			16	1	20 A	REC- JAN
REC- STORAGE #2	20 A	1	17					0.7	0.7	18	1	20 A	REC- MEN/WOMEN RESTROOM
REC- MEETING ROOM FLOOR	20 A	1	19	0.7	0.4					20	1	20 A	REC- MECH
LIGHTING - MEETING ROOM	20 A	1	21			0.5	0.0			22	1	20 A	LIGHTING - STAIRCASE
LIGHTING - MEN/WOMEN RESTROOM + MECH	20 A	1	23					0.3	0.3	24	1	20 A	LIGHTING - HALLWAY + STORAGE
REC- TEEN MEETING ROOM FLOOR	20 A	1	25	0.4	0.4					26	1	20 A	LIGHTING - TEEN MEETING ROOM
WATER FOUNTAIN	20 A	1	27			0.2	0.4			28	1	20 A	REC- EXTERIOR HALLWAY
LIGHTING- EXTERIOR	20 A	1	29					0.1	0.5	30	1	20 A	PROJECTOR
REC- ROOF	20 A	1	31	0.2	0.2					32	1	20 A	PROJECTOR SCREEN
REC-ROOF	20 A	1	33			0.2	0.4			34	1	15 A	EF-1
REC- COUNTER TEEN ROOM	20 A	1	35					0.2	0.2	36	1	20 A	REC- COUNTER TEEN ROOM
REC- COUNTER TEEN ROOM	20 A	1	37	0.2	0.2					38	1	20 A	REC- COUNTER TEEN ROOM
REC- COUNTER MEETING ROOM	20 A	1	39			0.2	0.2			40	1	20 A	REC- COUNTER MEETING ROOM
REC- COUNTER MEETING ROOM	20 A	1	41					0.2	0.2	42	1	20 A	REFRIGERATOR*
			43							44			
			45							46			
			47							48			
			49							50			
			51							52			
			53							54			
PHASE TOTALS (kVA):				26.1		24.5		20.6					

LOAD CLASSIFICATION	CONNECTED LOAD	DEMAND FACTOR	ESTIMATED LOAD
HVAC	9300 VA	100.00%	9300 VA
Heating	3000 VA	100.00%	3000 VA
Lighting	1541 VA	100.00%	1541 VA
Lighting - Exterior	88 VA	125.00%	110 VA
Other	47777 VA	100.00%	47777 VA
Power	200 VA	100.00%	200 VA
Receptacle	9320 VA	100.00%	9320 VA

CONNECTED LOAD: 71221 VA
CALCULATED LOAD: 71242 VA

CONNECTED AMPERES: 198 A
CALCULATED AMPERES: 198 A

DISTRIBUTION PANEL 'DP' SUMMARY

DISTRIBUTION PANEL LOAD SUMMARY: BUS RATING 800A

GEORGIA POWER MAX 12 MONTH DEMAND: 48KW

48KW / 0.8PF = 60KVA

60 KVA / 360 = 167 AMPS

PER NEC 220.87: 167A * 125% = 208.33 AMPS

208.33 (EXISTING LOAD) + 198A (NEW ADDITION LOAD) = 406.33 AMPS.

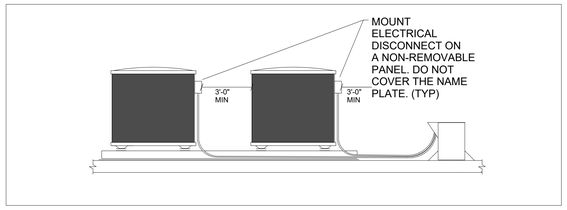

UNIT MOUNTED DISCONNECT FOR ROOFTOP HVAC EQUIPMENT | SCALE: N.T.S. | 1

MECHANICAL EQUIPMENT CONNECTION SCHEDULE

TAG NO.	EQUIP. ID	EQUIPMENT DESCRIPTION	EQUIPMENT CHARACTERISTICS VOLTAGE	PHASE	HP	KW	FLA	MCA	MOCP	CIRCUIT				FEEDER	BREAKER (TRIP/POLE)	DISCONNECT SWITCH SIZE	POLE	FUSE	FEATURES	REMARKS / KEYNOTES
1	RTU-1	ROOF TOP UNIT	208	3		23.7	65.7	79.5	90	D	-	2	4,6	--						NOTE 1&2
2	RTU-2	ROOF TOP UNIT	208	3		23.7	65.7	79.5	90	D	-	1	3,5	--						NOTE 1&2
3	EF-1	EXHAUST	115	1		0.4	3.8	4.8	15	D	-	12		2#12(CU),1#12(CU)G-1/2"C(EMT)	15/1					NOTE 1,3
4	UH-1	UNIT HEATER	208	1		3.0	14.4	18.1	20	D	-	8	,10	2#12(CU),1#12(CU)G-1/2"C(EMT)	20/0	30	2	NF		NOTE 1
5	EWH-1	ELECTRICAL WATER HEATER	208	1		9.0	43.2	54.0	60	D	-	7	,9	2#4(CU),1#10(CU)G-3/4"C(EMT)	60/2	60	2	NF		
6	RP-1	RECIRCULATION PUMP	115	1		0.3	2.3	2.9	15	D	-	12		2#12(CU),1#12(CU)G-12"C(EMT)	15/1					

NOTES FOR THIS SCHEDULE:
(1) IT IS THE CONTRACTOR'S RESPONSIBILITY TO COORDINATE ELECTRICAL WITH MECHANICAL EQUIPMENT REGARDING VOLTAGE AND PHASE.
(2) DISCONNECT PROVIDED INTEGRAL TO UNIT BY DIVISION 15.
(3) EXHAUST FAN IS TO BE IN CONTINUOUS OPERATION.

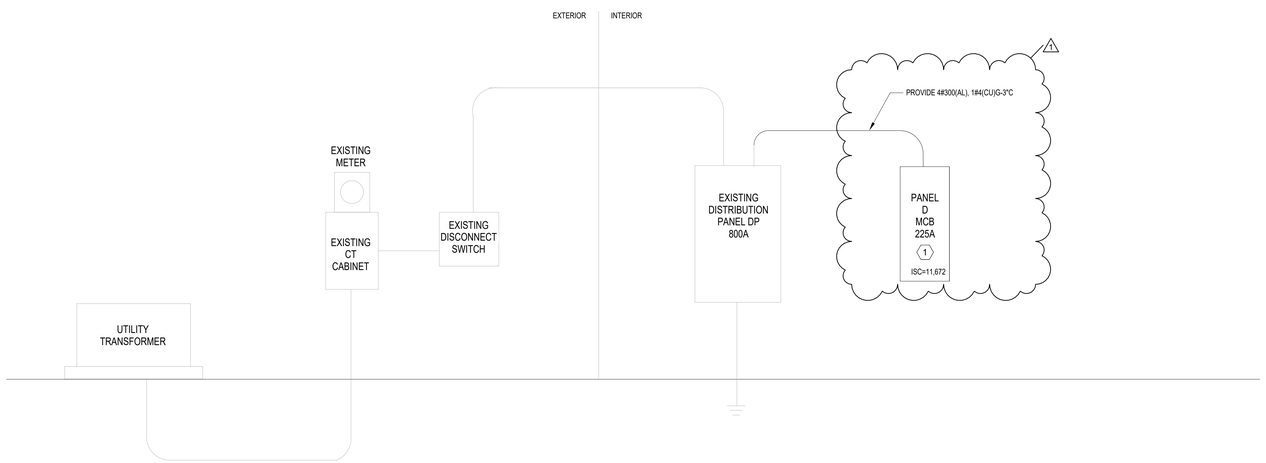

GENERAL NOTES

1. AIC RATINGS FOR BREAKERS AND EQUIPMENT SHALL BE THE NEXT STANDARD SIZE OR GREATER THAN FAULT CURRENT INDICATED ON RISER DIAGRAMS. SERIES RATING IS ACCEPTABLE. IF CONTRACTOR CHOOSES TO PROVIDE SERIES RATING, SUBMIT UL SERIES COMBINATION WITH SUBMITTALS.
2. AVAILABLE FAULT CURRENT INDICATED AT THE POWER COMPANY TRANSFORMER IS A CONSERVATIVE ESTIMATE BY THE ENGINEER. CONTACT POWER COMPANY TO OBTAIN ACTUAL AVAILABLE FAULT CURRENT PRIOR TO SUBMITTALS. IF FAULT CURRENT IS GREATER THAN THAT INDICATED ON RISER DIAGRAM CONTACT ENGINEER TO RECALCULATE FAULT CURRENT AT EACH PIECE OF EQUIPMENT PRIOR TO SUBMITTALS.
3. ELECTRICAL ROOM LAYOUT IS BASED ON SIEMENS EQUIPMENT. IF EQUIPMENT OTHER THAN SIEMENS IS UTILIZED, CONTRACTOR SHALL BE RESPONSIBLE TO MAKE EQUIPMENT FIT IN ROOM AND MAINTAIN WORKING CLEARANCES.
4. PROVIDE TO SCALE ELECTRICAL EQUIPMENT PLAN LAYOUTS WITH SUBMITTALS.
5. BOND ALL SERVICE GROUNDS TOGETHER.
6. PROVIDE FAULT CURRENT SIGN ON ALL GEAR PER NEC 110.24.
7. PROVIDE GRAPHIC PLAQUE INDICATING OTHER SERVICE LOCATIONS. MOUNT IN EACH ELECTRICAL ROOM.
8. MARK ALL PANELS AND LOAD CENTERS TO INDICATE WHERE THE POWER SUPPLY ORIGINATES PER NEC 408.4(B).
9. ALL ALUMINUM CONDUCTORS SHALL BE COMPACT TYPE AND PROVIDE ANTIOXIDANT PASTE ON ALL ALUMINUM CONDUCTORS AT TERMINATION POINTS.
10. CONTRACTOR TO COORDINATE WITH POWER COMPANY, PRIOR TO ANY WORK, AND OBTAIN REQUIREMENTS FOR ELECTRICAL SERVICE. CONTRACTOR TO PROVIDE POWER LOAD FORMS, INCLUDING ALL ASSOCIATED DOCUMENTS REQUIRED BY THE POWER COMPANY, TO THE APPROPRIATE POWER COMPANY REPRESENTATIVE PRIOR TO ANY WORK.
11. CIRCUIT BREAKERS 1200 AMP OR LARGER SHALL COMPLY WITH NEC 240.87, ARC FLASH ENERGY REDUCTION.
12. CONDUIT RISING THROUGH THE BUILDING SHALL BE SUPPORTED PER NEC 300.19(A).

ELECTRICAL LEGEND NOTES (THIS SHEET ONLY)

1. NEW PANEL "D" SHALL BE CONNECTED TO EXISTING DISTRIBUTION PANEL "DP" BY ELECTRICAL CONTRACTOR.

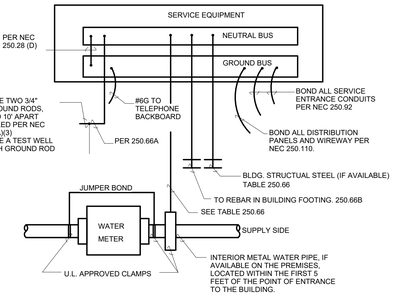

NOTES:
1. THE GROUNDING CONDUCTOR BROUGHT TO SERVICE EQUIPMENT MUST BE FULLY RATED PER NEC 250.66
2. THE GROUNDING ELECTRODE CONDUCTOR SHALL BE CONNECTED TO THE GROUNDED SERVICE CONDUCTOR, AT EACH SERVICE IN ACCORDANCE WITH NEC 250.24
3. TOP OF GROUND RODS SHALL BE 2" BELOW FINISHED GRADE.

GROUNDING DETAIL | SCALE: N.T.S. | 2

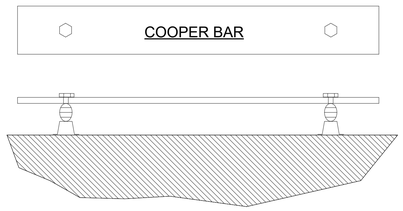

NOTES:
1. 2"W X 15"L X 1/4" THICK COPPER BAR W/PREDRILLED HOLES.
2. MOUNT BRACKETS TO WALL WITH INSULATORS AND BUSSBAR TO ACCOMMODATE GROUNDING CONDUCTORS.
3. LOCATE WHERE ACCESSIBLE, AT LEAST 36" AFF.
4. IN MAIN ELECTRICAL ROOM MOUNT AS NEAR AS POSSIBLE TO DPA.
5. USE ERITECH #EGBA14215TES OR APPROVED EQUAL.
6. ALL FASTENERS TO HAVE WASHERS.
7. COORDINATE LOCATION IN ALL ROOMS WITH OTHER TRADES.
8. SUBMIT THIS DEVICE WITH SHOP DRAWINGS.
9. ANCHOR TO WALL USING MANUF. RECOMMENDED FASTENERS.

GROUNDING BAR DETAIL | SCALE: N.T.S. | 3

CLAYTON COUNTY LIBRARY SYSTEM

RIVERDALE LIBRARY ADDITION

420 Valley Hill Rd, Riverdale, GA 30274

HAMMOND ENGINEERING, INC
CONSULTING ENGINEERS
6961 PEACHTREE INDUSTRIAL BLVD. #208
NORCROSS, GEORGIA, 30092
TEL: (678)292-6937
NATHANIEL D. HAMMOND P.E.
MECHANICAL/ELECTRICAL ENGINEER
P.E. #047450

© 2025 THESE DOCUMENTS REMAIN THE PROPERTY OF THE ARCHITECT AND MAY NOT BE USED OR REPRODUCED WITHOUT WRITTEN PERMISSION.

RELEASED FOR CONSTRUCTION

Revisions

No.	Date	Description
	03/19/2025	50% SET
	03/28/2025	100% SET
	03/31/2025	100% SET
	06/10/2025	100% SET
1	11/20/2025	Revision 1

GEORGIA REGISTERED PROFESSIONAL ENGINEER 047450 NATHANIEL D. HAMMOND

06/10/2025

Gardner Spencer Smith Tench & Jarbeau
A Professional Corporation for the Practice of Architecture
www.gsstj.com
50 Hurt Plaza SW, Suite 1100
Atlanta, Georgia 30303
404.522.8805
404.521.2118 (F)

PROJECT NO.
24105

SHEET TITLE
ELECTRICAL RISER DIAGRAM

SHEET NO.
E6.00

PLUMBING FIXTURE CONNECTION AND SPECIFICATION SCHEDULE - COMMERCIAL

FIXTURE INDENTIFICATION	FLOW	FIXTURE	MOUNTING TYPE	ROUGH-IN CONNECTIONS SIZE CW	HW	SAN	V	MANUFACTURER & MODEL BASIS OF DESIGN
EDF-1	8 GPH	DRINKING FOUNTAIN (ADA COMPLIANT)	WALL MOUNTED	1/2"	-	2"	2"	FIXTURE: ELKAY MODEL LZSTL8WSVRSK (INDOOR ONLY) OR ELKAY MODEL VRCTL8WSK (OUTDOOR), 115V/60HZ, BI-LEVEL, BARRIER - FREE, WALL-MOUNT, MOUNTING FRAME, REFRIGERATED DRINKING FOUNTAIN WITH BOTTLE FILLING STATION, IN-LINE WATER FILTER AND CANE APRON. DRAIN: P-TRAP ASSEMBLY.
ET-1	-	EXPANSION TANK	-	MATCH PIPE	-	-	-	-
L-1	0.35 GPM	LAVATORY	COUNTER MOUNTED	1/2"	1/2"	2"	2"	FIXTURE: TOTO MODEL LT542G, "UNDERCOUNTER LAVATORY" WITH INTEGRAL OVERFLOW, WHITE VITREOUS CHINA. 2 FAUCET: TOTO LT210G MANUAL LAVATORY FAUCET. POLISHED CHROME, 0.35 GPM AERATOR. THERMOSTATIC MIXING VALVE: LEONARD MODEL 170-LF, ASSE 1070 SUPPLIES: LEAD-FREE CHROME-PLATED BRASS LOOSE KEY SUPPLY STOP VALVES, CHROME-PLATED BRASS RISERS AND WALL FLANGE. DRAIN: SEAMLESS, PREWRAPPED, ADJUSTABLE CHROME-PLATED CAST BRASS OFFSET P-TRAP ASSEMBLY WITH GRID STRAINER. PROTECTIVE SHIELDING GUARDS: ADA-COMPLIANT, MANUFACTURED PLASTIC WRAPS FOR SUPPLIES, AND TRAP ASSEMBLIES.
MS-1	1.28 GPF	MOP BASIN	FLOOR MOUNTED	3/4"	3/4"	3"	2"	FIXTURE: FIAT PRODUCTS MODEL TSB3000, 24" x 24" STOCKTON TERRAZO MOP BASIN, SIX INCH DROP FRONT AND SS CURBS. FAUCET: FIAT PRODUCTS MODEL830AA. ACCESSORIES: FIAT PRODUCTS MODELS 832AA HOSE AND HOSE BRACKET 889CC MOP HANGER, 833AA SILICONE SEAL AND MSG SS WALL GUARDS.
S-1	1.5 GPM	PANTRY SINK (DOUBLE BOWL)	COUNTER MOUNTED	1/2"	1/2"	2"	2"	FIXTURE: ELKAY "LUSTERTONE CLASSIC STAINLESS STEEL DOUBLE BOWL DROP-IN ADA SINK", MODEL LRAD291855, OVERALL DIMENSIONS 29"L X 18", THREE HOLES 4" CENTER. TYPE 304 SERIES STAINLESS STEEL, SOUND DEADENING PADS. FAUCET: ELKAY MODEL LK810AT08T4, 1.5 GPM, 8-INCH ARC TUBE SPOUT, 4-INCH WRISTBLADE HANDLES, POLISHED CHROME. SUPPLIES: LEAD-FREE CHROME-PLATED BRASS LOOSE KEY SUPPLY STOP VALVES, CHROME-PLATED BRASS RISERS AND WALL FLANGE. DRAIN: STAINLESS STEEL WITH REMOVABLE BASKET STRAINER, RUBBER STOPPER AND P-TRAP ASSEMBLY WITH OFFSET TAILPIECE (AS REQUIRED).
UR-1	1.28 GPF	URINAL	WALL MOUNTED	3/4"	-	2"	2"	FIXTURE: TOTO MODEL UT105UG, "ULTRA HIGH-EFFICIENCY WASHOUT URINAL", 0.125 GPF, COTTON VITREOUS CHINA, TOP SPUD, CEFIONTECT CERAMIC GLAZE, WATERSENSE LISTED. FLUSH VALVE: TOTO TET2UA12#CP MANUAL URINAL FLUSH VALVE. 2 SUPPORT: COMMERCIAL ADJUSTABLE CARRIER SYSTEM.
WC-1 / WC-1A	1.28 GPF	WATER CLOSET (ADA COMPLIANT)	FLOOR - MOUNTED 2	1"	-	4"	2"	FIXTURE: TOTO MODEL CT705ULN, "COMMERCIAL FLUSHOMETER TOILET", 1.28 GPF, ELONGATED BOWL, 12" ROUGH-IN, COTTON COLOR, VITREOUS CHINA, CERAMIC GLAZE, WATERSENSE LISTED. FLUSH VALVE: TOTO MODEL TET2LA332#CP, MANUAL FLUSH VALVE, 1.28 GPF, EXPOSED, POLISHED CHROME. 2 SEAT: HEAVY-DUTY PLASTIC, ELONGATED, OPEN FRONT, LESS SEAT COVER, STAINLESS STEEL POSTS AND CHECK HINGE, WHITE. SUPPORT: COMMERCIAL ADJUSTABLE CARRIER SYSTEM.

NOTES:

1. REFER TO SPECIFICATIONS FOR ADDITIONAL REQUIREMENTS.
2. VERIFY AND COORDINATE ALL FIXTURE MOUNTING HEIGHTS WITH ARCHITECTURAL DRAWINGS.
3. ADA FIXTURES SHALL CONFORM TO ADA AND GEORGIA ACCESSIBILITY CODE REQUIREMENTS.
4. PROVIDE ADA PIPE GUARDS AT ALL ADA LAVATORIES AND SINKS.
5. ALL FIXTURES SHALL BE PROVIDED WITH SUPPLY STOPS, STAINLESS-STEEL BRAIDED FLEXIBLE SUPPLIES, AND P-TRAP ASSEMBLIES.
6. VENT PIPE SIZES ARE MINIMUM FOR AN INDIVIDUAL FIXTURE VENT UNLESS NOTED OTHERWISE ON PLANS OR RISER DIAGRAMS.
7. SERVICE SINK (MS-1) AND ALL HOSE CONNECTIONS SHALL INCLUDE INTEGRAL VACUUM BREAKERS PER IPC AND ASSE STANDARDS.
8. COORDINATE ALL ELECTRICAL REQUIREMENTS FOR SENSOR-OPERATED FIXTURES WITH ELECTRICAL.
9. PROVIDE TRAP PRIMERS FOR ALL FLOOR DRAINS WHERE SHOWN OR REQUIRED BY CODE.

PIPE MATERIAL SCHEDULE

SYSTEM	PIPE	FITTING	JOINT	NOTES
BURIED SANITARY DRAINAGE AND VENT	ASTM A74 SERVICE WEIGHT CAST IRON HUB & SPIGOT	ASTM A74 SERVICE WEIGHT CAST IRON HUB & SPIGOT	ASTM C564 PREMOLDED NEOPRENE COMPRESSION GASKET	-
ABOVE-FLOOR SANITARY DRAINAGE AND VENT	ASTM A74 NO-HUB CAST IRON	ASTM A74 NO-HUB CAST IRON	ASTM C1277 AND ASTM C1540 HEAVY DUTY HUBLESS COUPLINGS, STAINLESS STEEL SHIELD AND BANDS; ASTM C564 RUBBER GASKET	ALL SANITARY DRAINAGE PIPING 4" AND LARGER SHALL BE PROVIDED WITH PIPE RESTRAINTS AT HORIZONTAL OFFSETS >45°. BASIS OF DESIGN: HOLDRITE #117 SERIES.
VE ALTERNATE (WHERE PERMITTED): BURIED/ABOVE-FLOOR SANITARY DRAINAGE & VENT	PVC DWV PIPE, ASTM D2665, SCH 40	PVC SOCKET FITTINGS, ASTM D2665 / ASTM D3311	ASTM D2564 SOLVENT CEMENT & ASTM F656 PRIMER	PVC SHALL NOT BE INSTALLED WITHIN PLENUMS UNLESS WRAPPED PER ASTM E84/UL 910. FOLLOW HOLDBACK/RESTRAINT RULES AS ABOVE.
EXTERIOR BURIED WATER SERVICE ENTRANCE	ASTM B88 SOFT COPPER, TYPE K	ASME B16.22 WROUGHT COPPER JOINT FITTINGS	ASTM B32 LEAD-FREE SOLDER AND B813 FLUX	MATCHES CLAYTON COUNTY WATER AUTHORITY REQUIREMENTS.
ABOVE-FLOOR COLD WATER, HOT WATER, HOT WATER CIRCULATION	ASTM B88 HARD COPPER WATER TUBE, DRAWN TEMPER, TYPE "L",	ASME B16.22 WROUGHT COPPER OR ASME B16.18 CAST COPPER SOLDER-JOINT PRESSURE FITTINGS.	ASTM B32 LEAD-FREE SOLDER WITH ASTM B813 WATER FLUSHABLE FLUX.	USE FOR AREAS WHERE PRESSURE DOES NOT EXCEED MANUFACTURER'S RATING.
VE ALTERNATE ONLY: ABOVE-FLOOR COLD WATER, HOT WATER, HOT WATER CIRCULATION	ASTM B88 HARD COPPER WATER TUBE, DRAWN TEMPER, TYPE "L",	FOR USE IN AREAS THAT DO NOT EXCEED THE MANUFACTURER'S MAXIMUM PRESSURE RATING. ASME B16.18, ASME B16.22, ASME B16.51 COPPER ALLOY PRESS-CONNECT PRESSURE FITTINGS.	FOR USE IN AREAS THAT DO NOT EXCEED THE MANUFACTURER'S MAXIMUM PRESSURE RATING. EPDM RUBBER O-RING SEAL IN EACH END.	BASIS OF DESIGN:VIEGA PROPRESS FITTING SYSTEM. PIPE SIZES UP TO FOUR INCHES.
VE ALTERNATE ONLY: ABOVE-FLOOR OLD WATER, HOT WATER, AND HOT WATER CIRCULATION WHERE SYSTEM PRESSURE DOES NOT EXCEED MANUFACTURER'S PRESSURE RATINGS PERAVAILABLE PIPE SIZE RANGE.	ASTM F2855 CHLORINATED POLYVINYL CHLORIDE (CPVC)	ASTM F 439, SCHEDULE 80, CPVC SOCKET FITTINGS. ASTM F437, SCHEDULE 80, CPVC THREADED FITTINGS	ASTM F 493 SOLVENT CEMENT	-
VE ALTERNATE ONLY: ABOVE-GROUND COLD WATER & HOT WATER DOWNSTREAM OF THE WATER METER IN RESIDENTIAL/HOTEL UNITS.	ASTM F876, CROSS-LINK POLYETHYLENE (PEX-A)	ASTM F1960 (EXPANSION FITTINGS) AND ASTM F877 (GENERAL PEX TUBING REQUIREMENTS) MANIFOLD: ASTM F876, PEX PLASTIC, MULTIPLE OUTLET	ASTM F1960 (EXPANSION FITTINGS) AND ASTM F877 (GENERAL PEX TUBING REQUIREMENTS)	BASIS OF DESIGN: PIPE, FITTINGS, SUPPORTS AND ALL REQUIRED ACCESORIES FOR INSTALLATIONS SHALL BE UPONOR AQUAPEX. WHITE COILS SHALL BE USED ONLY DOWNSTREAM OF MANIFOLDS. MANIFOLDS SHALL BE COPPER. VALVELESS WITH PROPEX CONNECTIONS.

NOTES:

1. ALL MATERIALS AND FITTINGS SHALL COMPLY WITH THE 2018 IPC WITH GEORGIA AMENDMENTS AND CITY OF RIVERDALE / CLAYTON COUNTY REQUIREMENTS.
2. PVC SHALL NOT BE INSTALLED IN RETURN AIR PLENUMS UNLESS WRAPPED WITH ASTM E84 / UL 910 FIRE BARRIER WRAPPING.
3. ALL ABOVE-CEILING PIPING SHALL BE INSULATED PER GEORGIA ENERGY CODE.
4. PIPE IDENTIFICATION SHALL COMPLY WITH ANSI A13.1 AND IPC LABELING REQUIREMENTS.
5. THIS SCHEDULE APPLIES ONLY TO PLUMBING SCOPE FOR THE LIBRARY ADDITION. STORM DRAINAGE, ROOF DRAINS, GREASE WASTE, AND GAS PIPING ARE NOT INCLUDED IN THIS PROJECT.

WATER HEATER SCHEDULE

WATER HEATER IDENTIFICATION	LOCATION	STORAGE (GALLONS)	RECOVERY GPH	RECOVERY DEGREE RISE	ELECTRICAL DATA kW	V	PH	HZ	TEMPERATURE SETTING	MANUFACTURER AND MODEL (BASIS OF DESIGN)	NOTES
EWH-1	JANITOR ROOM 105 - ABOVE CEILING	40	23	80°	4.5	208	1	-	120°F	A.O.SMITH DEL- 40 OR APPROVED EQUAL	NOTES

NOTES:

1. PROVIDE THERMAL EXPANSION TANK SIZED PER MANUFACTURER AND IPC/GEORGIA AMENDMENTS.
2. PROVIDE FULL-PORT ISOLATION VALVES ON HOT AND COLD WATER SUPPLY TO WATER HEATER.
3. PROVIDE T&P RELIEF VALVE WITH DRAIN LINE PIPED TO AN APPROVED TERMINATION PER IPC 504.6.
4. PROVIDE DRAIN PAN WITH PIPED DRAIN WHERE THE WATER HEATER IS LOCATED ABOVE OCCUPIED SPACES.
5. PROVIDE VACUUM RELIEF VALVE WHERE REQUIRED BY MANUFACTURER OR LOCAL CODE.
6. PROVIDE DIELECTRIC UNIONS WHEN CONNECTING DISSIMILAR METALS.
7. COORDINATE ELECTRICAL DISCONNECT AND ELECTRICAL REQUIREMENTS WITH ELECTRICAL DRAWINGS.
8. INSTALL WATER HEATER PER MANUFACTURER'S INSTRUCTIONS AND GEORGIA STATE AMENDMENTS.
9. PROVIDE PLATFORM/STAND FOR WATER HEATER: HOLDRITE QUICKSTAND #60-SWHP-WM OR APPROVED EQUAL.

PUMP SCHEDULE

PUMP IDENTIFICATION	DESCRIPTION	TYPE	FLOW (GPM)	PRESSURE (FT HD)	ELECTRICAL DATA (V/PH/HZ)	HORSE POWER (HP)	RPM	MANUFACTURER & MODEL (BASIS OF DESIGN)	LOCATION
CP-1	DOMESTIC HOT WATER RECIRCULATING PUMP	IN - LINE	5	24	115/1PH/60Hz	1	3300	BELL & GOSSETT – BRONZE BODY (NRF OR EQUAL)	JANITOR ROOM 105 – ABOVE CEILING

NOTES:

1. PUMP SHALL BE BRONZE CONSTRUCTION, SUITABLE FOR DOMESTIC HOT WATER CIRCULATION.
2. PROVIDE FULL-PORT ISOLATION VALVES AND CHECK VALVE ON PUMP INLET AND OUTLET.
3. CONTROL PANEL AND AQUASTAT SHALL BE COMPATIBLE WITH AND CAPABLE OF INTEGRATION INTO BUILDING MANAGEMENT SYSTEM (BMS) IF REQUIRED.
4. PUMP SHALL OPERATE ONLY WHEN RETURN WATER TEMPERATURE DROPS BELOW SETPOINT AND STOP WHEN TEMPERATURE EXCEEDS SETPOINT.
5. COORDINATE PUMP OPERATION WITH BUILDING TIME CLOCK TO LIMIT OPERATION TO OCCUPIED HOURS UNLESS OTHERWISE DIRECTED.
6. PROVIDE ALL ACCESSORIES REQUIRED FOR A COMPLETE OPERATIONAL SYSTEM.

WATER HAMMER ARRESTOR SCHEDULE

PDI WHA IDENTIFICATION	FIXTURE UNIT CAPACITY	PIPE CONNECTION SIZE
A	1 - 11	1/2"
B	12 - 32	3/4"
C	33 - 60	1"
D	61 - 113	1 1/4"
E	114 - 154	1 1/2"
F	155 - 330	2"

NOTES:

1. WATER HAMMER ARRESTORS SHALL BE PISTON TYPE AND SHALL COMPLY WITH ASSE 1010 AND PDI-WH 201.
2. INSTALL WATER HAMMER ARRESTORS ON COLD WATER BRANCHES SERVING QUICK-CLOSING VALVES PER IPC 604.9.
3. LOCATE WATER HAMMER ARRESTORS AT THE LAST FIXTURE BRANCH CONNECTION UNLESS OTHERWISE SHOWN.
4. WATER HAMMER ARRESTORS SHALL BE ACCESSIBLE FOR SERVICE PER IPC REQUIREMENTS.
5. REFER TO THE DOMESTIC WATER RISER DIAGRAM FOR LOCATIONS AND INSTALLATION DETAILS.

PIPE INSULATION SCHEDULE

SYSTEM OR SERVICE	INSULATION TYPE	JACKET TYPE	VAPOR BARRIER REQUIRED	MINIMUM INSULATION THICKNESS - INCHES NOMINAL PIPE SIZES - INCHES 3/4" AND SMALLER	1" TO 1-1/4"	1-1/2" TO 3"	3" TO 6"
DOMESTIC COLD WATER	A	1	YES	1"	1"	1"	1"
DOMESTIC HOT WATER, HOT WATER RETURN	A	1	YES	1"	1"	1-1/2"	1-1/2"
SOIL WASTE & VENT: ABOVE GROUND	A	2	NO	N/A	N/A	1"	4"
SOIL WASTE & VENT: BELOW GROUND	A	3	YES	N/A	N/A	1"	6"

INSULATION TYPES:

A. ASTM C547 FIBERGLASS (MINERAL FIBER) WITH ASJ (ALL-SERVICE JACKET).
B. CELLULAR GLASS (FOAMGLAS®) — ONLY WHERE SPECIFICALLY REQUIRED.

NOTES:

1. FACTORY APPLIED. ALL SERVICE JACKET (ASJ)
2. ALL SERVICE JACKET (ASJ)
3. PVC JACKET

NOTES:

1. PROVIDE INSULATION OF TYPE AND THICKNESS INDICATED. INSTALLATION SHALL FOLLOW NAIMA AND MANUFACTURER REQUIREMENTS.
2. MAINTAIN VAPOR BARRIER INTEGRITY ON ALL COLD-WATER PIPING. SEAL JOINTS WITH ASJ TAPE.
3. INSULATION IN PLENUMS SHALL MEET ASTM E84, NFPA 255, OR UL 723 (25/50 FLAME/SMOKE RATING).
4. ABOVE-GROUND SANITARY INSULATION IS OPTIONAL, USED PRIMARILY FOR ACOUSTICS IN PUBLIC RESTROOMS AND OCCUPIED SPACES.
5. BELOW-GROUND SANITARY INSULATION APPLIES ONLY TO PIPING INSIDE THE BUILDING FOOTPRINT (CRAWL SPACE, UNDER SLAB BEFORE BURIAL, ETC.).
6. DO NOT INSULATE CLEANOUTS, FIXTURE CARRIERS, OR VALVES UNLESS SHOWN.
7. ALL DOMESTIC WATER INSULATION MUST COMPLY WITH THE GEORGIA ENERGY CODE.

PLUMBING SPECIALTIES SCHEDULE

SPECIALTIES IDENTIFICATION	DESCRIPTION	TYPE	DESCRIPTION / BASIS OF DESIGN
BFP-1	BACKFLOW PREVENTER – DOMESTIC WATER	DOUBLE CHECK VALVE ASSEMBLY (DCVA)	ASSE 1015 COMPLIANT; TESTABLE PER CCWA REQUIREMENTS
NFWH-1	NON-FREEZE WALL HYDRANT	BOX WITH CONCEALED HOSE CONNECTION	BRONZE, SELF-DRAINING, NON-FREEZE HYDRANT WITH INTEGRAL VACUUM BREAKER, "T" HANDLE KEY, AND STAINLESS STEEL RECESSED BOX
NFHB-1	NON-FREEZE WALL HOSE BIBB	WALL- MOUNTED	SELF-DRAINING, FROST-PROOF HOSE BIBB WITH INTEGRAL VACUUM BREAKER, 3/4" HOSE CONNECTION
RH-1 (OPTIONAL)	NON-FREEZE ROOF HYDRANT	-	ROOF-MOUNTED NON-FREEZE HYDRANT WITH INTEGRAL VACUUM BREAKER AND 3/4" HOSE CONNECTION (ONLY INCLUDE IF SHOWN ON ROOF PLAN).

NOTES:

1. PROVIDE FIRE-RATED ENCLOSURE FOR RECESSED WALL HYDRANT BOXES WHERE REQUIRED.
2. ALL BACKFLOW PREVENTERS SHALL COMPLY WITH ASSE 1015 AND CLAYTON COUNTY WATER AUTHORITY (CCWA) REQUIREMENTS.
3. PROVIDE LOCKS/KEYS FOR WALL HYDRANTS AS REQUIRED BY OWNER.
4. INSTALL ALL SPECIALTIES PER MANUFACTURER'S INSTRUCTIONS AND APPLICABLE CODES.

COMMON DRAWING REFERENCES

NOT ALL SYMBOLS ARE USED FOR THIS PROJECT

XX / #	XX: RISER SERVICE DESIGNATION # : RISER NUMBER DESIGNATION
X / X-#	X: DETAIL DESIGNATION X-#: DETAIL DESIGNATION DRAWING
	DETAIL DESIGNATION SHEET ON WHICH DETAIL OR SECTION APPEARS
#	KEY NOTE
#	DEMOLITION KEY NOTE
	CONNECT NEW TO EXISTING
	LIMIT OF DEMOLITION
	MATCHLINE
1	REVISION TAG

PHASING LINE TYPE LEGEND

	EXISTING TO REMAIN OR NEW WORK BY OTHERS (LIGHT, SOLID LINE)
	NEW WORK BY THIS CONTRACTOR (DARK, SOLID LINE)
	EXISTING TO BE REMOVED BY THIS CONTRACTOR (DARK, DASHED LINE, DEMOLITION PLANS)

DRAIN SCHEDULE

IDENTIFICATION	TYPE	BASIS OF DESIGN MANUFACTURER	MODEL	STRAINER	OPTIONS AND ACCESSORIES
FD-1	FLOOR DRAIN	JR SMITH	2010	STAINLESS STEEL, SQUARE	TRAP SEAL BARRIER (ASSE 1072)
RD-1	ROOF DRAIN (PRIMARY)	ACO OR JR SMITH	KS200 OR EQUAL	CAST IRON DOME	BOTTOM OUTLET
ERD-1	OVERFLOW ROOF DRAIN (SECONDARY)	ACO OR JR SMITH	KS200 OR EQUAL	OVERFLOW DOME	SIDE OUTLET WITH STANDPIPE OR SCUPPER COLLAR

NOTES:

1. VERIFY ROOF AND FLOOR ELEVATIONS AND COORDINATE WITH ARCHITECTURAL FINISHES PRIOR TO SETTING DRAINS. FLOOR DRAIN STRAINERS SHALL BE SET FLUSH WITH PORCELAIN TILE (PT) OR SEALED CONCRETE (SC).
2. PROVIDE FLOOR DRAINS WITH ASSE 1072 TRAP SEAL PROTECTION DEVICES, JR SMITH "QUAD CLOSE" OR APPROVED EQUAL.
3. ROOF DRAINS SHALL BE SIZED AND LOCATED PER ROOFING PLANS AND COORDINATED WITH ARCHITECTURAL ROOF SLOPE, TAPERED INSULATION LAYOUT, AND CIVIL STORM DRAINAGE REQUIREMENTS.
4. OVERFLOW ROOF DRAINS (ORD-1) SHALL BE INSTALLED AT ELEVATIONS REQUIRED BY THE ROOFING DESIGN AND AHJ REQUIREMENTS TO PROVIDE SECONDARY DRAINAGE PER IPC 1503 (OVERFLOW PROTECTION).
5. STANDARD P-TRAPS ARE ACCEPTABLE FOR FLOOR DRAINS. DEEP SEAL TRAPS ARE NOT REQUIRED WHERE TRAP SEAL PROTECTION IS PROVIDED.
6. PROVIDE CLAMPING RINGS, MEMBRANES, AND FLASHING COMPONENTS AS REQUIRED FOR ROOF DRAIN INSTALLATION BY ROOFING MANUFACTURER.
7. ROOF DRAIN ACCESSORIES, INCLUDING GRAVEL GUARDS, UNDERDECK CLAMPS, SUMP RECEIVERS, AND ADJUSTABLE EXTENSIONS SHALL BE PROVIDED WHERE REQUIRED BY ROOF THICKNESS OR STRUCTURAL CONDITIONS.
8. COORDINATE ROOF DRAIN BODIES AND DOMES WITH ARCHITECTURAL ROOF ASSEMBLY, INSULATION THICKNESS, DECK OPENINGS, AND CIVIL STORM LEADER PIPING.
9. OVERFLOW DRAINS SHALL DISCHARGE SEPARATELY FROM PRIMARY ROOF DRAINS AND SHALL NOT BE TIED INTO THE PRIMARY DRAINAGE SYSTEM PER IPC.
10. PROVIDE ALL ACCESSORIES NEEDED FOR A COMPLETE INSTALLATION, INCLUDING GUARDS, FLASHING RINGS, MEMBRANES, AND SECUREMENT HARDWARE WHERE APPLICABLE.

PLUMBING DEMOLITION GENERAL NOTES

1. REMOVE ONLY THE PLUMBING SYSTEMS INDICATED ON THE DRAWINGS. PROTECT ALL EXISTING PIPING AND EQUIPMENT TO REMAIN.
2. CAP AND SEAL ALL ABANDONED UTILITY CONNECTIONS—SANITARY, VENT, AND DOMESTIC WATER—AT THE POINT OF REMOVAL. CAPS MUST BE ACCESSIBLE AND CLEARLY MARKED.
3. COORDINATE SHUTDOWNS WITH THE OWNER BEFORE DISCONNECTING ANY EXISTING PLUMBING SYSTEMS SERVING OCCUPIED AREAS OF THE LIBRARY.
4. IF CONCEALED PIPING, UTILITIES, OR UNKNOWN CONDITIONS ARE DISCOVERED, NOTIFY THE ENGINEER IMMEDIATELY PRIOR TO CONTINUING WORK.
5. REMOVE UNUSED HANGERS, SUPPORTS, AND APPURTENANCES ASSOCIATED WITH DEMOLISHED PIPING.
6. MAINTAIN TEMPORARY WATER AND RESTROOM SERVICE AS REQUIRED DURING DEMOLITION ACTIVITIES.
7. ANY HAZARDOUS MATERIALS ENCOUNTERED SHALL BE HANDLED IN ACCORDANCE WITH OWNER DIRECTION AND ENVIRONMENTAL REGULATIONS.

COORDINATION SPECIFIC NOTES

1. CONTRACTOR SHALL COORDINATE ROUTING OF ALL PLUMBING PIPING WITH STRUCTURAL MEMBERS, ARCHITECTURAL FEATURES, MECHANICAL DUCTWORK, AND ELECTRICAL EQUIPMENT TO AVOID CONFLICTS.
2. BEFORE INSTALLATION, CONTRACTOR SHALL VERIFY THAT ALL SLEEVES, OPENINGS, AND PENETRATIONS REQUIRED FOR PLUMBING SYSTEMS ARE ACCURATELY SIZED AND LOCATED.
3. CONTRACTOR SHALL COMPLY WITH ALL STRUCTURAL REQUIREMENTS FOR CORE DRILLING, FRAMING MODIFICATIONS, AND FLOOR PENETRATIONS. NO CUTTING OF BEAMS OR JOISTS WITHOUT APPROVAL FROM THE STRUCTURAL ENGINEER.
4. CONTRACTOR SHALL INSTALL PIPING IN A MANNER THAT MAINTAINS ACCESSIBILITY TO VALVES, CLEANOUTS, AND EQUIPMENT FOR SERVICE.

CODE COMPLIANCE

ALL WORK SHALL BE PERFORMED, INSTALLED, AND TESTED IN COMPLIANCE WITH THE CODES AND AMENDMENTS ADOPTED BY THE INSPECTION AUTHORITY. NOTHING IN THESE PLANS IS TO BE CONSTRUCTED TO PERMIT WORK NOT CONFORMING TO THESE CODES OR OTHER APPLICABLE TO THIS PROJECT.

A. STATE BUILDING CODES INCLUDING THE LATEST STATE ADOPTED CODE AMENDMENTS AND REQUIREMENTS OF THE AUTHORITY HAVING JURISDICTION (AHJ):
1. INTERNATIONAL PLUMBING CODE (IPC): 2018 EDITION WITH GA AMENDMENTS
2. INTERNATIONAL BUILDING CODE (IBC): 2018 EDITION WITH GA AMENDMENTS
3. INTERNATIONAL ENERGY CONSERVATION CODE (ECC): 2015 EDITION WITH GA SUPPLEMENTS AND AMENDMENTS

B. THE LATEST EDITIONS OF ANY OTHER APPLICABLE STANDARDS:
1. GEORGIA ACCESSIBILITY CODE - GAC 120-3-20 - 2015 EDITION

PLUMBING NEW WORK GENERAL NOTES

1. ALL PLUMBING WORK SHALL COMPLY WITH THE 2018 INTERNATIONAL PLUMBING CODE (IPC) WITH GEORGIA STATE AMENDMENTS, THE GEORGIA ACCESSIBILITY CODE, THE GEORGIA ENERGY CODE, AND ALL CITY OF RIVERDALE AND CLAYTON COUNTY REQUIREMENTS.
2. CONTRACTOR SHALL VERIFY ALL EXISTING CONDITIONS, FIELD DIMENSIONS, PIPE ELEVATIONS, AND UTILITY TIE-IN LOCATIONS PRIOR TO INSTALLATION. ANY DISCREPANCIES SHALL BE REPORTED TO THE ENGINEER BEFORE PROCEEDING.
3. COORDINATE ALL PLUMBING WORK WITH ARCHITECTURAL, STRUCTURAL, MECHANICAL, ELECTRICAL, FIRE PROTECTION, AND LOW-VOLTAGE TRADES. MAINTAIN REQUIRED CLEARANCES AND PROVIDE A COMPLETE OPERATIONAL SYSTEM.
4. ALL NEW DOMESTIC WATER PIPING SHALL BE TYPE L COPPER OR PEX-A (WHERE PERMITTED), WITH INSULATION THICKNESS MEETING GA ENERGY CODE. NO PVC PERMITTED ABOVE GRADE IN OCCUPIED AREAS.
5. SANITARY AND VENT PIPING SHALL COMPLY WITH IPC MATERIAL REQUIREMENTS. CAST IRON OR PVC PERMITTED WHERE CONCEALED PER CODE.
6. PROVIDE CLEANOUTS PER IPC AND GEORGIA AMENDMENTS. LOCATIONS SHALL REMAIN ACCESSIBLE.
7. FIXTURE CARRIERS, SUPPORTS, CONNECTION FITTINGS, TRAPS, AND SUPPLIES SHALL COMPLY WITH IPC AND MANUFACTURER REQUIREMENTS.
8. CONTRACTOR SHALL COORDINATE SHUTDOWNS AND TIE-INS WITH BUILDING STAFF AND THE OWNER. WORK IMPACTING THE EXISTING LIBRARY OPERATION SHALL BE SCHEDULED OUTSIDE NORMAL BUSINESS HOURS UNLESS OTHERWISE APPROVED.
9. PROVIDE BALANCING VALVES, MIXING VALVES, WATER HAMMER ARRESTORS, AND PRVS WHERE SHOWN ON PLANS OR REQUIRED BY CODE.
10. ALL WATER HEATERS SHALL COMPLY WITH GA ENERGY CODE, INCLUDING INSULATION AND EFFICIENCY REQUIREMENTS. PROVIDE T&P DISCHARGE PIPING PER IPC.
11. BACKFLOW PREVENTION SHALL COMPLY WITH CLAYTON COUNTY WATER AUTHORITY STANDARDS. FINAL LOCATION AND TYPE SHALL BE VERIFIED WITH CCWA PRIOR TO INSTALLATION.
12. CONTRACTOR SHALL PROVIDE AS-BUILT CONDITIONS FOR ALL UNDERGROUND AND ABOVE-CEILING PIPING. AS-BUILTS MUST BE SUBMITTED PRIOR TO FINAL INSPECTION.
13. CONTRACTOR IS RESPONSIBLE FOR PROTECTING ALL FINISHES AND RESTORING ANY DISTURBED AREAS TO ORIGINAL CONDITION.

SHEET LIST - PLUMBING

NUMBER	NAME
P0.01	PLUMBING GENERAL NOTES, LEGEND AND DESIGN LEGEND
P0.02	PLUMBING DETAILS
P1.10	FLOOR PLAN - PLUMBING DRAIANGE
P1.20	FLOOR PLAN - PLUMBING DOMESTIC WATER
P1.30	ROOF PLAN - PLUMBING
P1.40	ISOMETRIC RISER - PLUMBING DOMESTIC WATER
P1.41	ISOMETRIC RISER - PLUMBING DRAINAGE

PLUMBING PIPE ACCESSORIES & VALVES

NOT ALL SYMBOLS ARE USED FOR THIS PROJECT

BFV	BALANCING VALVE
	BACKFLOW PREVENTER
	BRANCH CONNECTION, BOTTOM
	BRANCH CONNECTION, TOP
	CHECK VALVE
	CONNECT TO EXISTING
	DIRECTION OF FLOW
	ELBOW, TURNED UP
	ELBOW, TURNED DOWN
	FLOOR OR GRADE REGULATOR
	FLOOR OR ROOF DRAIN
	FLOOR SINK
PRV	GAS PRESSURE REGULATOR
	HOT WATER CIRCULATION PUMP
	PIPING CAP
	PIPE CLEANOUT
	PIPE BREAK/CONTINUATION
	PIPE FLANGE
PRV	PRESSURE REDUCING VALVE
	SHUT-OFF VALVE
SOL	SOLENOID VALVE
	STRAINER
	TEMPERATURE & PRESSURE RELIEVE VALVE (T&P)
	TRAPPED CONNECTION
	TRENCH DRAIN
	UNION
WHA	WATER HAMMER ARRESTOR (WHA)
WH	WALL HYDRANT (WH) OR HOSE BIBB (HB)
WCO	WALL CLEANOUT (WCO)

PLUMBING PIPE SYMBOLS

NOT ALL SYMBOLS ARE USED FOR THIS PROJECT

CD	CONDENSATE DRAIN PIPING
	DOMESTIC COLD WATER PIPING (CW)
	DOMESTIC HOT WATER PIPING (HW)
	DOMESTIC HOT WATER CIRCULATION PIPING (HWC)
D	DRAIN PIPING
GWW	GRAY WATER WASTE PIPING
GW	GREASE WASTE PIPING
	HEAT TRACED PIPING
NG	NATURAL GAS PIPING
NP	NON-POTABLE WATER PIPING
OW	OIL WASTE PIPING
PD	PUMP DISCHARGE PIPING
SAN	SANITARY DRAIN PIPING ABOVE FLOOR SLAB
SSD	SUBSOIL DRAINAGE PIPING
SAN	STORM DRAIN PIPING BELOW THE FLOOR SLAB
ST	STORM OVERFLOW DRAIN PIPING
V	SANITARY VENT PIPING
SAN	SANITARY DRAIN PIPING BELOW THE FLOOR SLAB

ABBREVIATIONS

ABV.	ABOVE
BEL.	BELOW
BFP	BACKFLOW PREVENTER
CB	CATCH BASIN
CLG.	CEILING
CW	COLD WATER
DSB	DOWNSPOUT BOOT
DSC	DOWNSPOUT COVER
ERW	EMERGENCY RAINWATER (SECONDARY)
FCO	FLOOR CLEANOUT
FD	FLOOR DRAIN
GA.	GAUGE
GALV.	GALVANZED
GCO	EXTERIOR GRADE CLEANOUT
GH	GROUND HYDRANT
HB	HOSE BIBB
HD	HUB DRAIN
HW	HOT WATER
HWC	HOT WATER CIRCULATING
I.E.	INVERT ELEVATION
IMB	ICE MAKER VALVE BOX
LI	LINT INTERCEPTOR
MAX.	MAXIMUM
MIN.	MINIMUM
N.C.	NORMALLY CLOSED
N.O.	NORMALLY OPEN
O.C.	ON CENTER
OS	OIL/SAND INTERCEPTOR
OW	OIL WASTE
PD	PARKING DECK DRAIN
PRV	PRESSURE REDUCING VALVE
RHB	ROOF HYDRANT
RW	RAINWATER (PRIMARY)
S	SANITARY
SG	SAND/GRIT INTERCEPTOR
SW	SAMPLE WELL
TD	TR

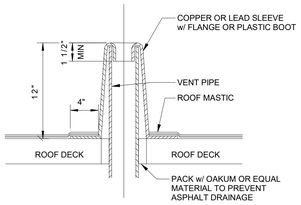

1 VENT THRU ROOF DETAIL
SCALE: NO SCALE

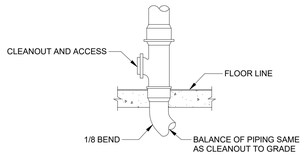

WASTE STACK/ STORM LEADER CLEANOUT (VERTICAL)

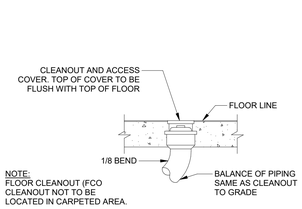

NOTE:
FLOOR CLEANOUT (FCO
CLEANOUT NOT TO BE
LOCATED IN CARPETED AREA.

FLOOR CLEANOUT

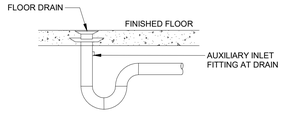

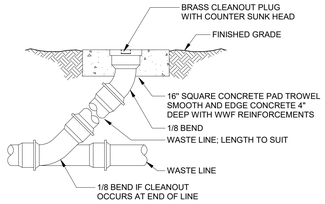

CLEANOUT TO GRADE (COTG)

2 CLEANOUT DETAIL
SCALE: NO SCALE

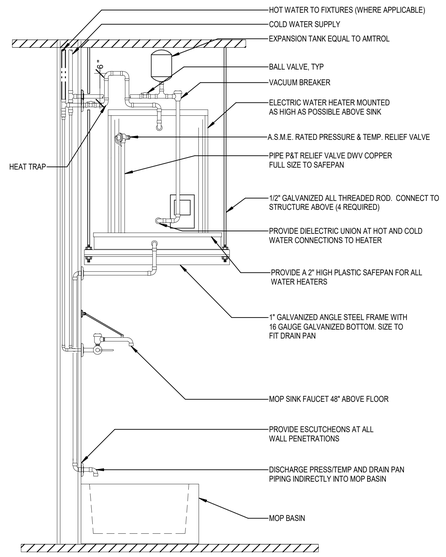

3 WATER HEATER & MOP SINK DETAIL
SCALE: NO SCALE

CLAYTON COUNTY LIBRARY SYSTEM

RIVERDALE
LIBRARY
ADDITION

420 Valley Hill
Rd, Riverdale,
GA 30274

HAMMOND ENGINEERING, INC
CONSULTING ENGINEERS
6961 PEACHTREE INDUSTRIAL BLVD. #208
NORCROSS, GEORGIA, 30092
TEL: (678)292-6937
NATHANIEL D. HAMMOND P.E.
MECHANICAL/ELECTRICAL ENGINEER
P.E. #047450

© 2025 - THESE DOCUMENTS REMAIN THE PROPERTY OF THE ARCHITECT AND MAY NOT BE USED, OR REPRODUCED WITHOUT WRITTEN PERMISSION.

RELEASED FOR CONSTRUCTION

Revisions

No.	Date	Description
	03/19/2025	50% SET
	03/28/2025	100% SET
	03/31/2025	100% SET
	06/10/2025	100% SET
1	11/20/2025	Revision 1

GEORGIA REGISTERED PROFESSIONAL ENGINEER NATHANIEL D. HAMMOND PE047450

11/20/2025

Gardner
Spencer
Smith
Tench &
Jarbeau

A Professional Corporation
for the Practice of Architecture

www.gsstj.com

50 Hurt Plaza SW,
Suite 1100
Atlanta, Georgia
30303
404.522.8805
404.521.2118 (F)

PROJECT NO.
24105

SHEET TITLE
PLUMBING DETAILS

SHEET NO.
P0.02

GENERAL STORM NOTES

1. ALL VERTICAL STORM AND OVERFLOW LEADERS SHALL BE NO-HUB CAST IRON WITH HEAVY-DUTY COUPLINGS.
2. PRIMARY AND SECONDARY (OVERFLOW) SYSTEMS SHALL REMAIN SEPARATE AND SHALL NOT CONNECT TO EACH OTHER.
3. HORIZONTAL STORM PIPING SHALL SLOPE NOT LESS THAN 1/8" PER FOOT TOWARD THE POINT OF DISCHARGE.
4. PROVIDE CLEANOUT AT BASE OF EACH STORM LEADER AND AT CHANGES IN DIRECTION GREATER THAN 45 DEGREES.
5. OVERFLOW LEADERS SHALL DISCHARGE TO A VISIBLE LOCATION ABOVE FINISHED GRADE, DIRECTED TO LANDSCAPE, WITHOUT IMPACTING WALKS OR ENTRANCES.
6. OVERFLOW DRAIN RIMS SHALL BE SET 2" ABOVE PRIMARY DRAIN RIMS.
7. COORDINATE ALL CONNECTIONS TO SITE STORM SYSTEM WITH CIVIL DRAWINGS.

GENERAL DRAINAGE NOTES

1. ALL WORK SHALL COMPLY WITH THE 2021 INTERNATIONAL PLUMBING CODE AND GEORGIA STATE AMENDMENTS.
2. CONTRACTOR SHALL VERIFY ALL EXISTING CONDITIONS PRIOR TO INSTALLATION.
3. ALL HORIZONTAL SANITARY PIPING SHOWN IS BELOW SLAB UNLESS OTHERWISE NOTED.
4. COORDINATE ROUTING OF ALL PIPING WITH ARCHITECTURAL, STRUCTURAL, MECHANICAL, AND ELECTRICAL DRAWINGS.
5. PROVIDE SLEEVES AND FIRESTOPPING AT ALL WALL AND FLOOR PENETRATIONS AS REQUIRED.
6. ALL PIPING SHALL BE TESTED PER IPC 312 PRIOR TO CONCEALMENT.
7. MAINTAIN REQUIRED CLEARANCES FROM STRUCTURAL BEAMS, JOISTS, DUCTS, AND ELECTRICAL SYSTEMS.
8. ALL VENT PIPING SHALL RISE VERTICALLY ABOVE FLOOD RIM BEFORE COMBINING.
9. NSTALL CLEANOUTS PER IPC REQUIREMENTS AND ENSURE THEY ARE FULLY ACCESSIBLE.
10. NOTIFY ENGINEER IMMEDIATELY OF ANY CONFLICTS OR DISCREPANCIES PRIOR TO INSTALLATION.

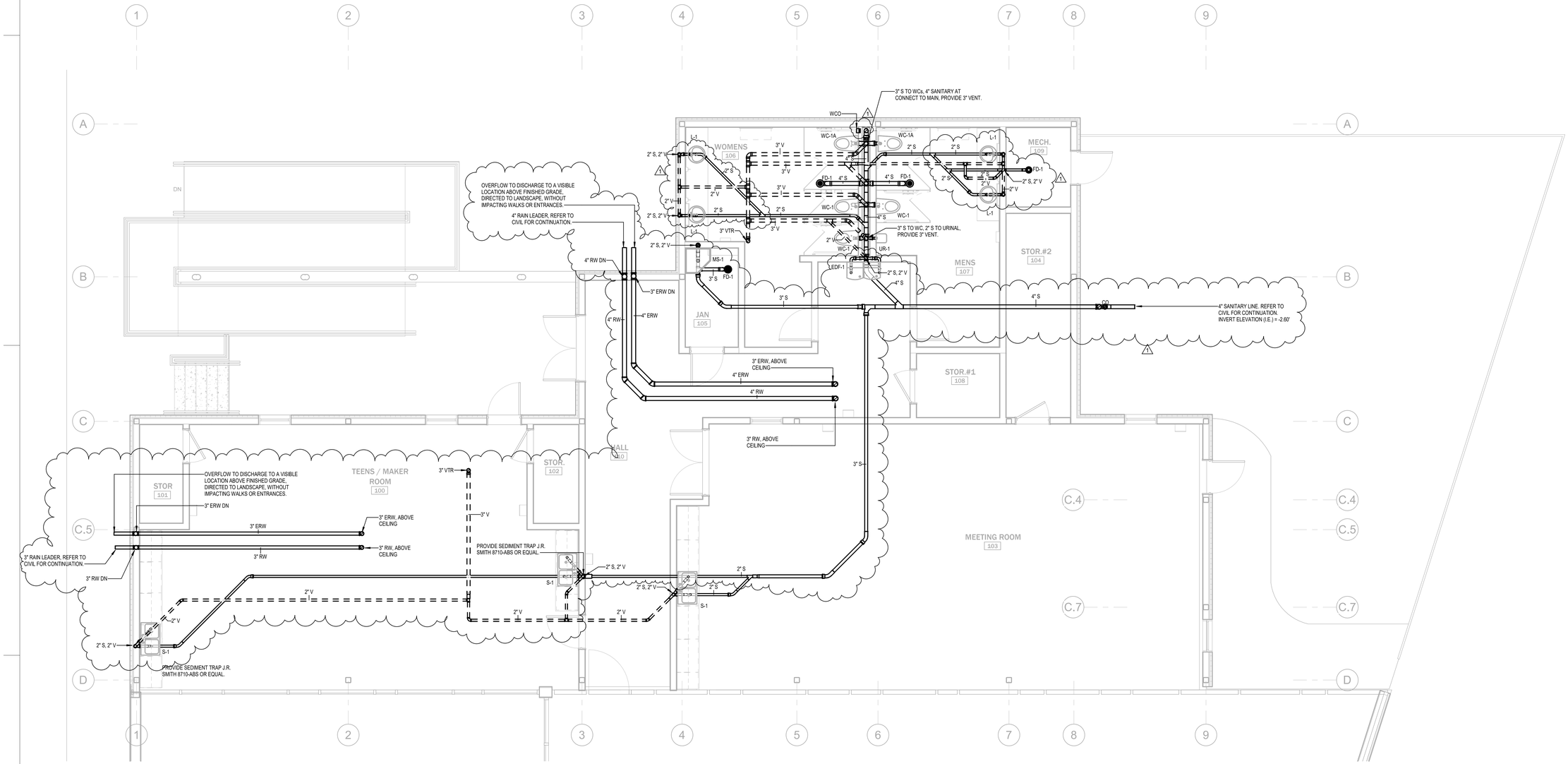

1 FLOOR PLAN - PLUMBING DRAINAGE
1/4" = 1'-0"

CLAYTON COUNTY LIBRARY SYSTEM

RIVERDALE LIBRARY ADDITION

420 Valley Hill Rd, Riverdale, GA 30274

HAMMOND ENGINEERING, INC
CONSULTING ENGINEERS
6961 PEACHTREE INDUSTRIAL BLVD. #208
NORCROSS, GEORGIA, 30092
TEL: (678)292-6937
NATHANIEL D. HAMMOND P.E.
MECHANICAL/ELECTRICAL ENGINEER
P.E. #047450

© 2025 THESE DOCUMENTS REMAIN THE PROPERTY OF THE ARCHITECT AND MAY NOT BE USED, OR REPRODUCED WITHOUT WRITTEN PERMISSION.

RELEASED FOR CONSTRUCTION

Revisions

No.	Date	Description
	03/19/2025	50% SET
	03/28/2025	100% SET
	03/31/2025	100% SET
	06/10/2025	100% SET
1	11/20/2025	Revision 1

GEORGIA REGISTERED PROFESSIONAL ENGINEER NATHANIEL D. HAMMOND

11/20/2025

Gardner Spencer Smith Tench & Jarbeau
A Professional Corporation for the Practice of Architecture
www.gsstj.com

50 Hurt Plaza SW,
Suite 1100
Atlanta, Georgia
30303
404.522.8805
404.521.2118 (F)

PROJECT NO.
24105

SHEET TITLE
FLOOR PLAN - PLUMBING DRAIANGE

SHEET NO.
P1.10

DOMESTIC WATER NOTES

1. INSTALL DOMESTIC WATER SYSTEMS PER IPC (GEORGIA AMENDMENTS) AND LOCAL AHJ REQUIREMENTS.
2. PIPE SIZES SHOWN ARE DIAGRAMMATIC. VERIFY FINAL ROUTING AND SIZES PER APPROVED SUBMITTALS AND FIELD CONDITIONS.
3. COORDINATE DOMESTIC WATER ROUTING WITH ARCHITECTURAL, STRUCTURAL, HVAC, ELECTRICAL, AND FIRE PROTECTION TRADES.
4. PROVIDE REQUIRED BACKFLOW PREVENTION DEVICES, ISOLATION VALVES, AND THERMAL EXPANSION CONTROL PER CODE.
5. INSULATE ALL HOT WATER AND RECIRCULATION PIPING PER INSULATION SCHEDULE. PROTECT COLD WATER PIPING FROM FREEZING.
6. VERIFY BUILDING WATER PRESSURE. PROVIDE PRV IF STATIC PRESSURE EXCEEDS 80 PSI.
7. ALL VALVES, PIPING, AND EQUIPMENT SHALL BE INSTALLED FULLY ACCESSIBLE WITH ACCESS PANELS WHERE CONCEALED.
8. FLUSH, DISINFECT, AND TEST DOMESTIC WATER PIPING PER AWWA REQUIREMENTS.
9. FIRESTOP ALL PENETRATIONS THROUGH RATED ASSEMBLIES USING UL-LISTED SYSTEMS.
10. REFER TO CIVIL DRAWINGS FOR DOMESTIC WATER SERVICE ENTRY AND CONTINUATION OUTSIDE THE BUILDING.

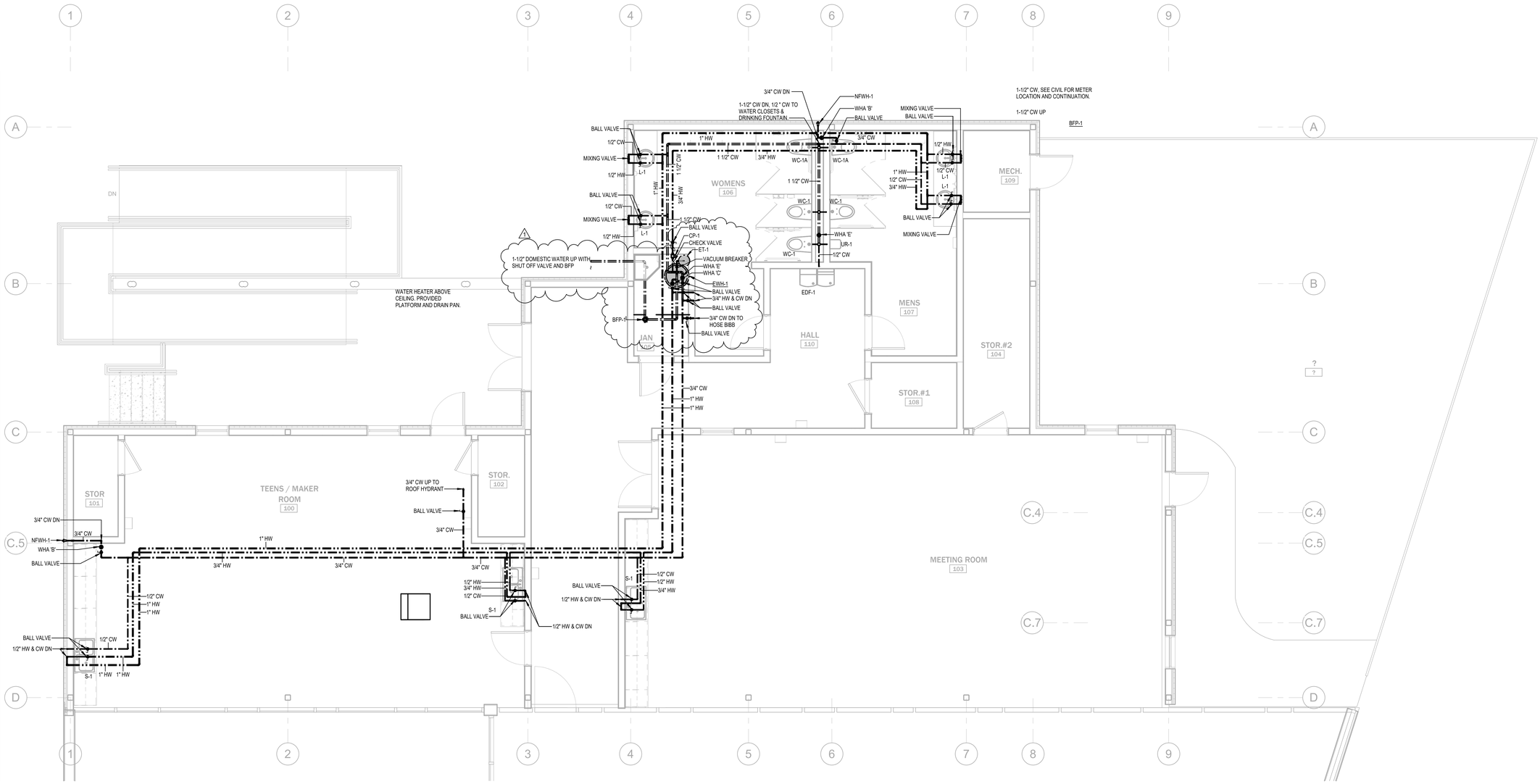

1 FLOOR PLAN - PLUMBING DOMETIC WATER
1/4" = 1'-0"

CLAYTON COUNTY LIBRARY SYSTEM

RIVERDALE LIBRARY ADDITION

420 Valley Hill Rd, Riverdale, GA 30274

HAMMOND ENGINEERING, INC
CONSULTING ENGINEERS
6961 PEACHTREE INDUSTRIAL BLVD. #208
NORCROSS, GEORGIA, 30092
TEL: (678)292-6937
NATHANIEL D. HAMMOND P.E.
MECHANICAL/ELECTRICAL ENGINEER
P.E. #047450

© 2025 - THESE DOCUMENTS REMAIN THE PROPERTY OF THE ARCHITECT AND MAY NOT BE USED, OR REPRODUCED WITHOUT WRITTEN PERMISSION.

RELEASED FOR CONSTRUCTION

Revisions

No.	Date	Description
	03/19/2025	50% SET
	03/28/2025	100% SET
	03/31/2025	100% SET
	06/10/2025	100% SET
1	11/20/2025	Revision 1

GEORGIA REGISTERED PROFESSIONAL ENGINEER NATHANIEL D. HAMMOND PE047450

11/20/2025

Gardner Spencer Smith Tench & Jarbeau
A Professional Corporation for the Practice of Architecture
www.gsstj.com

50 Hurt Plaza SW, Suite 1100
Atlanta, Georgia 30303
404.522.8805
404.521.2118 (F)

PROJECT NO.
24105

SHEET TITLE
FLOOR PLAN - PLUMBING DOMESTIC WATER

SHEET NO.
P1.20

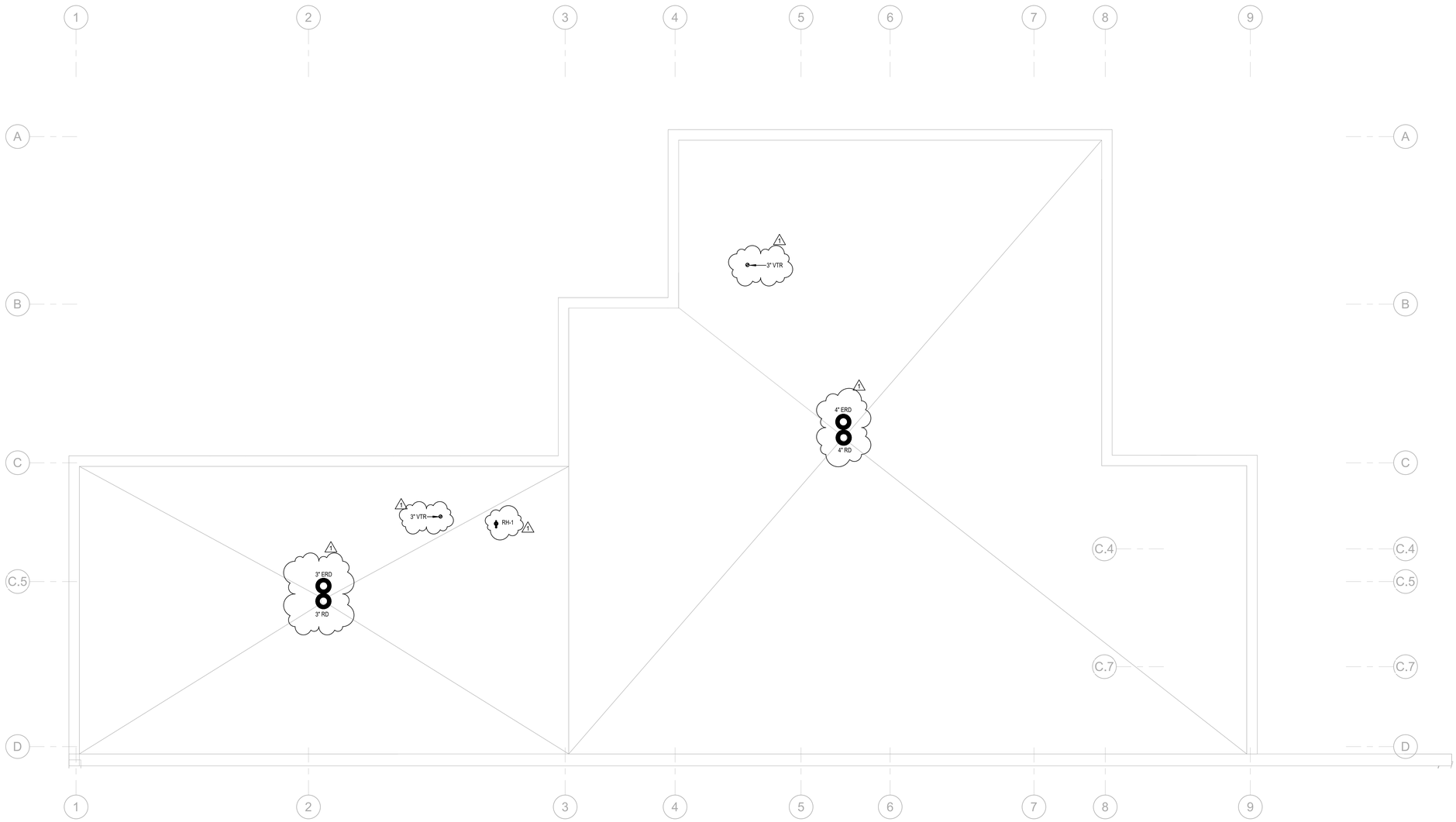

1 ROOF PLAN - PLUMBING
1/4" = 1'-0"

ROOF GENERAL NOTES

1. CONTRACTOR SHALL VERIFY ALL ROOF SLOPES, DRAIN LOCATIONS, ELEVATIONS, AND LOW POINTS WITH ARCHITECTURAL DRAWINGS PRIOR TO INSTALLATION. NOTIFY ENGINEER OF ANY DISCREPANCIES BEFORE WORK BEGINS.
2. COORDINATE INSTALLATION OF ALL ROOF DRAINS, OVERFLOW DRAINS, FLASHINGS, CLAMPING RINGS, SUMP PANS, AND INSULATION WITH THE ROOFING CONTRACTOR. ALL ROOF DRAIN ASSEMBLIES SHALL BE INSTALLED PER MANUFACTURER'S INSTRUCTIONS AND ROOFING WARRANTY REQUIREMENTS.
3. ROOF DRAINS SHALL BE LOCATED AT STRUCTURAL LOW POINTS.
4. PRIMARY AND SECONDARY (OVERFLOW) ROOF DRAINS SHALL BE INSTALLED AT THE ELEVATIONS SHOWN. SECONDARY DRAIN RIMS SHALL BE SET 2 INCHES ABOVE THE PRIMARY DRAIN RIM ELEVATION.
5. DO NOT COMBINE PRIMARY AND SECONDARY (OVERFLOW) STORM PIPING. SECONDARY DRAINAGE SYSTEM MUST REMAIN SEPARATE AND DISCHARGE VISIBLY TO THE EXTERIOR ABOVE FINISHED GRADE.
6. ALL INTERNAL STORM LEADERS SHALL BE NO-HUB CAST IRON WITH HEAVY-DUTY COUPLINGS UNLESS NOTED OTHERWISE. COORDINATE VERTICAL LEADER LOCATIONS WITH STRUCTURAL BEAMS, JOISTS, DUCTWORK, AND ELECTRICAL CONDUITS.
7. MAINTAIN MINIMUM SLOPES ON HORIZONTAL STORM PIPING PER IPC REQUIREMENTS. HORIZONTAL STORM PIPING SHALL SLOPE NOT LESS THAN 1/8 INCH PER FOOT UNLESS NOTED OTHERWISE.
8. ALL STORM DRAINAGE PIPING SHALL BE TESTED PER IPC REQUIREMENTS PRIOR TO CONCEALMENT.
9. PROVIDE CLEANOUTS AT THE BASE OF EACH INTERNAL LEADER AND AT CHANGES IN DIRECTION GREATER THAN 45 DEGREES.
10. DO NOT ROUTE STORM PIPING THROUGH ELECTRICAL ROOMS, IT ROOMS, OR ANY SPACES PROHIBITED BY THE ARCHITECT OR CODE UNLESS SPECIFICALLY APPROVED.
11. OVERFLOW DISCHARGE POINTS SHALL NOT CREATE HAZARDS TO SIDEWALKS, ADA ROUTES, ENTRANCES, OR ADJACENT PROPERTY. COORDINATE FINAL OUTLET LOCATION WITH ARCHITECTURAL AND CIVIL DRAWINGS.
12. ALL ROOF PENETRATIONS SHALL BE SEALED IN ACCORDANCE WITH ROOFING MANUFACTURER'S DETAILS TO MAINTAIN WARRANTY.
13. PLUMBING VENTS SHALL TERMINATE AT LEAST 10 FEET HORIZONTALLY FROM MECHANICAL AIR INTAKES UNLESS EXTENDED 3 FEET ABOVE THE INTAKE ELEVATION.

CLAYTON COUNTY LIBRARY SYSTEM

RIVERDALE LIBRARY ADDITION

420 Valley Hill Rd, Riverdale, GA 30274

HAMMOND ENGINEERING, INC
CONSULTING ENGINEERS
6961 PEACHTREE INDUSTRIAL BLVD. #208
NORCROSS, GEORGIA, 30092
TEL: (678)292-6937
NATHANIEL D. HAMMOND P.E.
MECHANICAL/ELECTRICAL ENGINEER
P.E. #047450

© 2025 THESE DOCUMENTS REMAIN THE PROPERTY OF THE ARCHITECT AND MAY NOT BE USED OR REPRODUCED WITHOUT WRITTEN PERMISSION.

RELEASED FOR CONSTRUCTION

Revisions

No.	Date	Description
	03/19/2025	50% SET
	03/28/2025	100% SET
	03/31/2025	100% SET
	06/10/2025	100% SET
1	11/20/2025	Revision 1

GEORGIA REGISTERED PROFESSIONAL ENGINEER NATHANIEL D. HAMMOND No. PE047450

11/20/2025

Gardner Spencer Smith Tench & Jarbeau
A Professional Corporation
for the Practice of Architecture
www.gsstj.com

50 Hurt Plaza SW,
Suite 1100
Atlanta, Georgia
30303
404.522.8805
404.521.2118 (F)

PROJECT NO.
24105

SHEET TITLE
ROOF PLAN - PLUMBING

SHEET NO.
P1.30

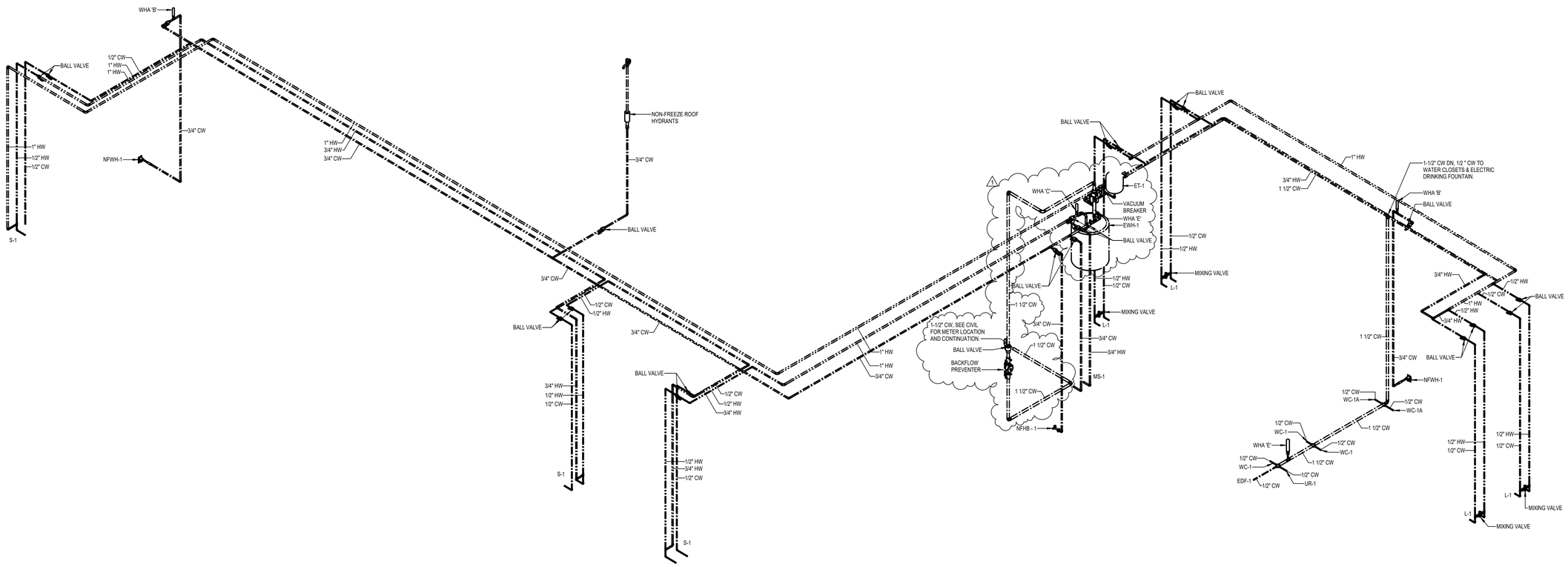

3 ISOMETRIC RISER - PLUMBING DOMESTIC WATER

CLAYTON COUNTY LIBRARY SYSTEM

RIVERDALE LIBRARY ADDITION

420 Valley Hill Rd, Riverdale, GA 30274

HAMMOND ENGINEERING, INC
CONSULTING ENGINEERS
6961 PEACHTREE INDUSTRIAL BLVD. #208
NORCROSS, GEORGIA, 30092
TEL: (678)292-6937
NATHANIEL D. HAMMOND P.E.
MECHANICAL/ELECTRICAL ENGINEER
P.E. #047450

© 2025 - THESE DOCUMENTS REMAIN THE PROPERTY OF THE ARCHITECT AND MAY NOT BE USED OR REPRODUCED WITHOUT WRITTEN PERMISSION.

RELEASED FOR CONSTRUCTION

Revisions

No.	Date	Description
	03/19/2025	50% SET
	03/28/2025	100% SET
	03/31/2025	100% SET
	06/10/2025	100% SET
1	11/20/2025	Revision 1

GEORGIA REGISTERED PROFESSIONAL ENGINEER PE#047450 NATHANIEL D. HAMMOND

11/20/2025

Gardner Spencer Smith Tench & Jarbeau
A Professional Corporation for the Practice of Architecture
www.gsstj.com

50 Hurt Plaza SW, Suite 1100
Atlanta, Georgia 30303
404.522.8805
404.521.2118 (F)

PROJECT NO.

24105

SHEET TITLE

ISOMETRIC RISER - PLUMBING DOMESTIC WATER

SHEET NO.

P1.40

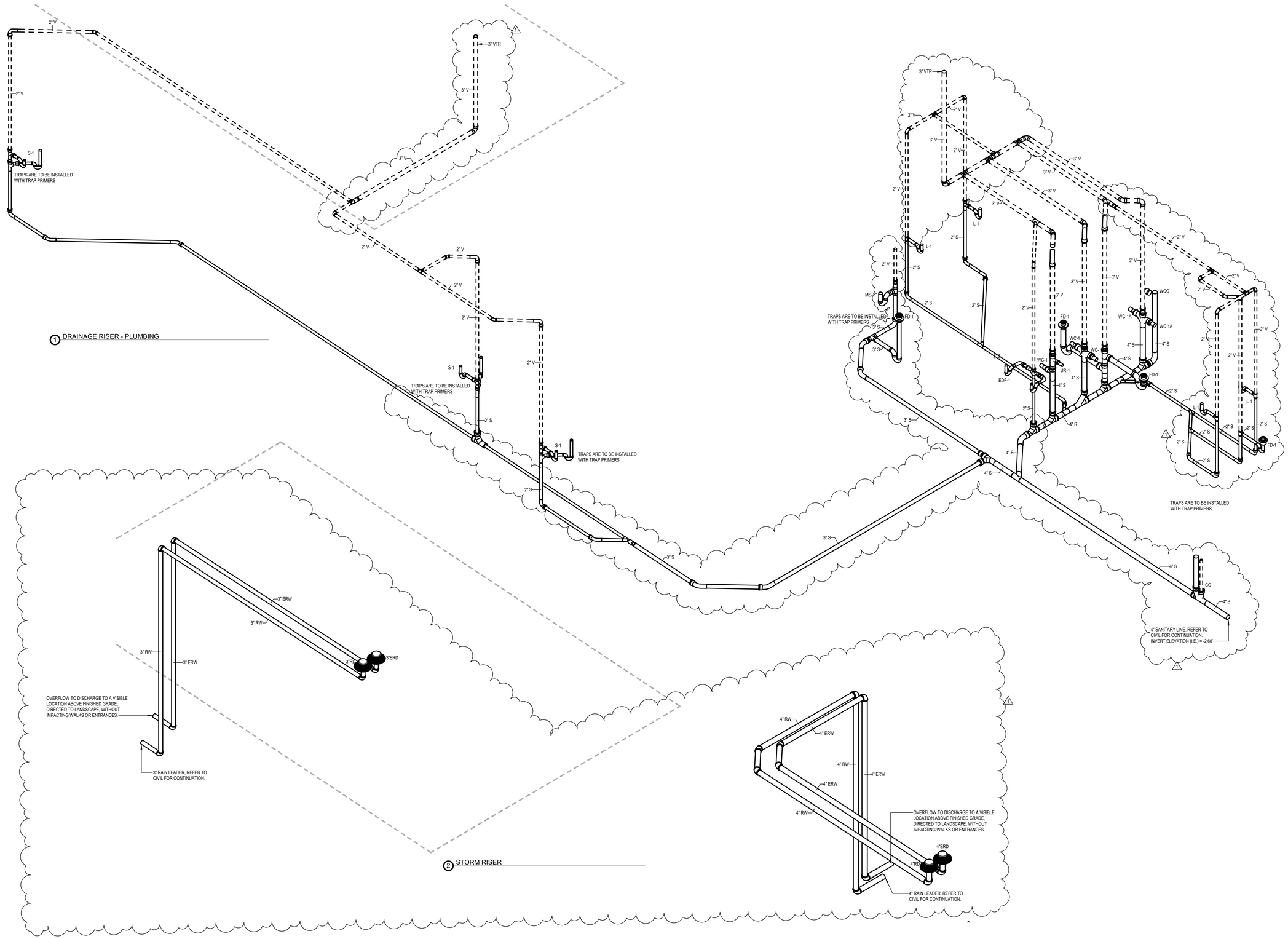

CLAYTON COUNTY LIBRARY SYSTEM

RIVERDALE LIBRARY ADDITION

420 Valley Hill Rd, Riverdale, GA 30274

HAMMOND ENGINEERING, INC
CONSULTING ENGINEERS
6961 PEACHTREE INDUSTRIAL BLVD, #208
NORCROSS, GEORGIA, 30092
TEL: (678)292-6937
NATHANIEL D. HAMMOND P.E.
MECHANICAL/ELECTRICAL ENGINEER
P.E. #047450

© 2025 THESE DOCUMENTS REMAIN THE PROPERTY OF THE ARCHITECT AND MAY NOT BE USED, OR REPRODUCED WITHOUT WRITTEN PERMISSION.

RELEASED FOR CONSTRUCTION

Revisions

No.	Date	Description
	03/19/2025	50% SET
	03/28/2025	100% SET
	03/31/2025	100% SET
	06/10/2025	100% SET
1	11/20/2025	Revision 1

GEORGIA REGISTERED PROFESSIONAL ENGINEER NATHANIEL D. HAMMOND PE047450

11/20/2025

Gardner Spencer Smith Tench & Jarbeau
A Professional Corporation for the Practice of Architecture
www.gsstj.com

50 Hurt Plaza SW,
Suite 1100
Atlanta, Georgia
30303
404.522.8805
404.521.2118 (F)

PROJECT NO.

24105

SHEET TITLE

ISOMETRIC RISER - PLUMBING DRAINAGE

SHEET NO.

P1.41

HAZARD CLASSIFICATION LEGEND

NFPA 13

	FIRE PROTECTION CONTRACTOR SHALL PROVIDE A COMPLETE CODE COMPLIANT AUTOMATIC WET PIPE SYSTEM . ALL AREAS NOTED ARE TO BE CONSIDERED LIGHT HAZARD WITH A MINIMUM SPRINKLER DISCHARGE DENSITY OF 0.10 GPM/SQ. FT. FOR THE MOST HYDRAULICALLY REMOTE 1,500 SQ. FT. AND A 100 GPM HOSE STREAM, UNLESS OTHERWISE NOTED ON THE DRAWINGS.
	FIRE PROTECTION CONTRACTOR SHALL PROVIDE A COMPLETE CODE COMPLIANT AUTOMATIC WET PIPE SYSTEM . ALL AREAS NOTED ARE TO BE CONSIDERED ORDINARY HAZARD GROUP I WITH A MINIMUM SPRINKLER DISCHARGE DENSITY OF 0.15 GPM/SQ. FT. FOR THE MOST HYDRAULICALLY REMOTE 1,500 SQ. FT. AND A 250 GPM HOSE STREAM. SPRINKLER HEAD SPACING SHALL NOT EXCEED MAXIMUM SPACING DISTANCES SET FORTH BY NFPA 13.
	FIRE PROTECTION CONTRACTOR SHALL PROVIDE A COMPLETE CODE COMPLIANT AUTOMATIC WET PIPE SYSTEM . ALL AREAS NOTED ARE TO BE CONSIDERED ORDINARY HAZARD GROUP 2 WITH A MINIMUM SPRINKLER DISCHARGE DENSITY OF 0.20 GPM/SQ. FT. FOR THE MOST HYDRAULICALLY REMOTE 1,500 SQ. FT. AND A 250 GPM HOSE STREAM. SPRINKLER HEAD SPACING SHALL NOT EXCEED MAXIMUM SPACING DISTANCES SET FORTH BY NFPA 13.
	FIRE PROTECTION CONTRACTOR SHALL PROVIDE A COMPLETE CODE COMPLIANT AUTOMATIC WET PIPE SYSTEM . ALL AREAS NOTED ARE TO BE CONSIDERED EXTRA HAZARD GROUP 1 WITH A MINIMUM SPRINKLER DISCHARGE DENSITY OF 0.30 GPM/SQ. FT. FOR THE MOST HYDRAULICALLY REMOTE 2,500 SQ. FT. AND A 500 GPM HOSE STREAM. SPRINKLER HEAD SPACING SHALL NOT EXCEED MAXIMUM SPACING DISTANCES SET FORTH BY NFPA 13.
	FIRE PROTECTION CONTRACTOR SHALL PROVIDE A COMPLETE CODE COMPLIANT AUTOMATIC WET PIPE SYSTEM . ALL AREAS NOTED ARE TO BE CONSIDERED EXTRA HAZARD GROUP 2 WITH A MINIMUM SPRINKLER DISCHARGE DENSITY OF 0.40 GPM/SQ. FT. FOR THE MOST HYDRAULICALLY REMOTE 3,500 SQ. FT. AND A 500 GPM HOSE STREAM. SPRINKLER HEAD SPACING SHALL NOT EXCEED MAXIMUM SPACING DISTANCES SET FORTH BY NFPA 13.

CODE COMPLIANCE

ALL WORK SHALL BE PERFORMED, INSTALLED, AND TESTED IN COMPLIANCE WITH THE CODES AND AMENDMENTS ADOPTED BY THE INSPECTION AUTHORITY. NOTHING IN THESE PLANS IS TO BE CONSTRUCTED TO PERMIT WORK NOT CONFORMING TO THESE CODES OR OTHER APPLICABLE TO THIS PROJECT.

A. STATE BUILDING CODES INCLUDING THE LATEST STATE ADOPTED CODE AMENDMENTS AND REQUIREMENTS OF THE AUTHORITY HAVING JURISDICTION (AHJ):
1. INTERNATIONAL FIRE CODE (IFC): 2018 EDITION
2. INTERNATIONAL BUILDING CODE (IBC): 2018 EDITION WITH GA AMENDMENTS

B. THE LATEST EDITIONS OF THE STATE ADOPTED NATIONAL FIRE PROTECTION ASSOCIATION (NFPA) REFERENCE STANDARDS INCLUDING ANY AMENDMENTS OF THE AUTHORITY HAVING JURISDICTION (AHJ):
1. NFPA 13 - 2016 EDITION
2. NFPA 13R -2016 EDITION (IF APPLICABLE; NOT FOR THIS PROJECT)
3. NFPA 14 - 2016 EDITION (STANDPIPES, IF APPLICABLE)
4. NFPA 20 - 2016 EDITION (FIRE PUMPS, IF APPLICABLE)
5. NFPA 24 -2016 EDITION
6. NFPA 25 - 2017 EDITION (INSPECTION, TESTING & MAINTENANCE)
7. NFPA 72 - 2016 EDITION (FIRE ALARM SYSTEMS)

C. THE LATEST EDITIONS OF ANY OTHER APPLICABLE STANDARDS:
1. GEORGIA STATE MINIMUM FIRE SAFETY STANDARDS
2. CLAYTON COUNTY FIRE DEPARTMENT LOCAL AMENDMENTS
3. CITY OF RIVERDALE ORDINANCES
4. UL 1479 & ASTM E814 — FIRESTOPPING REQUIREMENTS
5. ANSI A117.1 — ACCESSIBILITY (REFERENCED BY IBC)

GA R&R 120-3-3 FIRE PROTECTION NOTE

"FIRE PROTECTION SYSTEM DESIGN SHALL BE PERFORMED BY A LICENSED FIRE SPRINKLER CONTRACTOR IN ACCORDANCE WITH GA RULES & REGULATIONS 120-3-3."

SHEET LIST - FIRE PROTECTION

NUMBER	NAME
FP0.01	FIRE PROTECTION GENERAL NOTES, LEGEND AND DESIGN INTENT
FP1.10	FLOOR PLAN - FIRE PROTECTION

COORDINATION NOTES

1. CONTRACTOR SHALL COORDINATE ALL WORK WITH ELECTRICAL, MECHANICAL, PLUMBING, FIRE ALARM, ARCHITECTURAL, STRUCTURAL, AND CIVIL TRADES.
2. CONTRACTOR SHALL VERIFY CEILING HEIGHTS, CEILING SYSTEMS, AND SUPPORT STRUCTURES BEFORE INSTALLATION.
3. ALL EQUIPMENT AND SPRINKLER PIPING SHALL BE SUPPORTED PER NFPA 13, MANUFACTURER REQUIREMENTS, AND APPLICABLE BUILDING CODES.
4. ALL PIPING, VALVES, AND EQUIPMENT SHALL REMAIN ACCESSIBLE FOR INSPECTION AND MAINTENANCE.

FIRE PROTECTION PIPING MATERIAL SCHEDULE

SYSTEM	PIPE	FITTING	JOINT
WET SPRINKLER PIPING	ASTM A53, TYPE E OR S, GRADE B, SCHEDULE 40 BLACK STEEL PIPE	ASTM A47 MALLEABLE IRON, GROOVED END	AWWA C606 / UL 213 MECHANICAL GROOVED COUPLINGS
DRY SPRINKLER PIPING (IF APPLICABLE)	ASTM A53, TYPE E OR S, GRADE B, SCHEDULE 40 GALVANIZED STEEL PIPE	ASTM A47 MALLEABLE IRON, GROOVED END	AWWA C606 / UL 213 MECHANICAL GROOVED COUPLINGS

NOTE:

1. CONTRACTOR TO VERIFY ALL MATERIALS WITH AHJ AND MANUFACTURER REQUIREMENTS.

FIRE PROTECTION GENERAL NOTES

1. SPRINKLER HEAD LOCATIONS SHOWN ON THESE DRAWINGS ARE DIAGRAMMATIC AND FOR COORDINATION ONLY. FINAL FIRE PROTECTION SYSTEM DESIGN, SPRINKLER LAYOUT, HYDRAULIC CALCULATIONS, PIPE SIZING, SPRINKLER TYPES, AND SYSTEM ZONING SHALL BE COMPLETED BY A LICENSED FIRE SPRINKLER CONTRACTOR IN ACCORDANCE WITH NFPA 13 AND THE REQUIREMENTS OF THE LOCAL AHJ.
2. HAZARD CLASSIFICATION:
   LIBRARY, MEETING ROOMS, OFFICES, AND READING AREAS SHALL BE CLASSIFIED AS LIGHT HAZARD.
   JANITOR / WATER SERVICE ROOM CONTAINING THE 4" DOMESTIC BFP AND 4" FIRE DCDA SHALL BE CLASSIFIED AS ORDINARY HAZARD GROUP 1 (OH1).
3. FIRE SPRINKLER CONTRACTOR SHALL FIELD-VERIFY ALL CEILING TYPES, STRUCTURAL CONDITIONS, AND OBSTRUCTIONS PRIOR TO FINAL SPRINKLER DESIGN.
4. FINAL SPRINKLER DESIGN SHALL COMPLY WITH NFPA 13, NFPA 14, NFPA 20 (IF APPLICABLE), NFPA 24, THE INTERNATIONAL BUILDING CODE, GEORGIA STATE FIRE MARSHAL REQUIREMENTS, CITY OF RIVERDALE ORDINANCES, AND CLAYTON COUNTY FIRE DEPARTMENT.
5. COORDINATE FINAL SPRINKLER HEAD PLACEMENT WITH LIGHTING FIXTURES, HVAC DIFFUSERS, CEILING GRID LAYOUT, ARCHITECTURAL SOFFITS, DUCTWORK, AND STRUCTURAL ELEMENTS.
6. ALL PENETRATIONS THROUGH RATED WALLS, CEILINGS, AND FLOORS SHALL BE SEALED USING UL-LISTED FIRESTOP SYSTEMS. CONTRACTOR SHALL MAINTAIN THE FIRE-RESISTANCE RATING OF ASSEMBLIES.
7. ALL SPRINKLER COMPONENTS SHALL BE UL/FM LISTED AND INSTALLED IN ACCORDANCE WITH MANUFACTURER'S INSTRUCTIONS.
8. FIRE SPRINKLER CONTRACTOR SHALL SUBMIT FIRE PROTECTION SHOP DRAWINGS, PRODUCT DATA, HYDRAULIC CALCULATIONS, AND MANUFACTURER CUT SHEETS FOR REVIEW AND AHJ APPROVAL PRIOR TO INSTALLATION.

FIRE PROTECTION SHOP DRAWINGS

1. THE FIRE SPRINKLER CONTRACTOR IS RESPONSIBLE FOR SUBMITTING NFPA 13-COMPLIANT SHOP DRAWINGS INCLUDING:
   COMPLETE SPRINKLER LAYOUT
   PIPE SIZES AND ROUTING
   HYDRAULIC CALCULATIONS
   HANGER AND BRACING DETAILS
   SPRINKLER HEAD MODEL SELECTION
   VALVE LOCATIONS
   FDC, DRAINS, AND INSPECTOR TEST VALVES
   STANDPIPE REQUIREMENTS (IF APPLICABLE)
2. CONTRACTOR SHALL VERIFY AVAILABLE WATER FLOW AND PRESSURE WITH THE LOCAL WATER AUTHORITY AND DESIGN THE SYSTEM TO MEET ALL MINIMUM REQUIRED DEMANDS.
3. SHOP DRAWINGS SHALL BE REVIEWED BY THE ENGINEER AND SUBMITTED TO THE AUTHORITY HAVING JURISDICTION FOR APPROVAL.

FIRE STOPPING NOTES

1. USE ONLY FIRESTOP PRODUCTS TESTED IN ACCORDANCE WITH ASTM E814, ASTM E-119, OR UL 1479 AND APPROVED FOR THE SPECIFIC ASSEMBLY PENETRATED.
2. FOR SINGLE PENETRATIONS, USE READY-TO-USE LATEX-BASED OR SILICONE-BASED INTUMESCENT SEALANT LISTED FOR THE PENETRATED ASSEMBLY.
3. FOR MULTIPLE OR LARGER OPENINGS, USE A UL-LISTED INTUMESCENT BLOCK SYSTEM OR FIRESTOP SYSTEM CAPABLE OF BEING REMOVED AND REINSTALLED WITHOUT COMPROMISING FIRE INTEGRITY.
4. FIRESTOP MANUFACTURERS MAY INCLUDE: HILTI, 3M, RECTORSEAL, STI (SPECIFIED TECHNOLOGIES), OR APPROVED EQUAL.

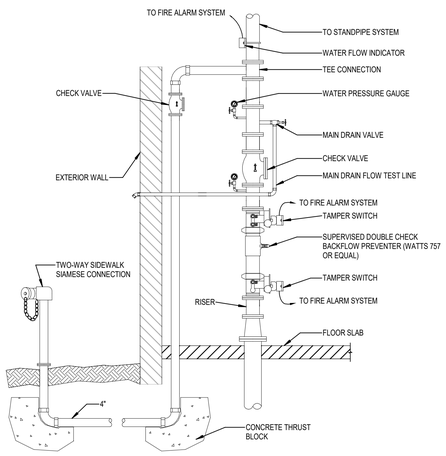

1 **FIRE SERVICE DETAIL**
SCALE: NO SCALE

FIRE PROTECTION ABBREVIATIONS

ABBREVIATION	DEFINITION
A/C	ABOVE CEILING
AFF	ABOVE FINISHED FLOOR
AFG	ABOVE FINISHED GRADE
B/F	BELOW FLOOR
B/G	BELOW GRADE
BLDG	BUILDING
CI	CAST IRON
CL	CENTER LINE
CONC	CONCEALED SPRINKLER
DN	DOWN
DWGS	DRAWINGS
EL	ELEVATION
F	FIRE LINE
FLR	FLOOR
FF	FINISHED FLOOR
FHV	FIRE HOSE VALVE
FSP	FIRE STANDPIPE
GEN	GENERAL
IE	INVERT ELEVATION
LOC	LOCATION
NIC	NOT IN CONTRACT
PLBG	PLUMBING
SP	SPRINKLER
TS	TAMPER SWITCH
WFS	WATER FLOW SWITCH

THESE ARE STANDARD ABBREVIATIONS. ALL ABBREVIATIONS SHOWN ABOVE MAY NOT APPEAR ON DRAWINGS.

FIRE PROTECTION LEGEND

SYMBOL	DEFINITION
	RISER DOWN (ELBOW)
	RISER UP (ELBOW)
	RISE OR DROP
	BRANCH - BOTTOM CONNECTION
	BRANCH - TO CONNECTION
	BRANCH - SIDE CONNECTION
	VALVE IN RISE
	ANGLE VALVE
	SIDEWALL SPRINKLER
	CHECK VALVE
	SHUT-OFF VALVE
	GLOBE VALVE
	PRESSURE REDUCING VALVE
	SOLENOID OPERATED VALVE
	UPRIGHT SPRINKLER
	PENDENT SPRINKLER
	CONCEALED SPRINKLER
	VALVE IN CAST IRON BOX W/ CONCRETE. PAD
	FLOW SWITCH
	CONCENTRIC REDUCER
	ECCENTRIC REDUCER
	STRAINER
	UNION
	CAP ON END OF PIPE
	PLUGGED TEE
	PRESSURE GAUGE WITH GAUGE COCK
	PIPE ANCHOR
	CONNECT TO EXISTING
	FLOW INDICATOR FOR PORTABLE METER
	FLOW - IN DIRECTION OF ARROW
	BACKFLOW PREVENTER W/ STRAINER
	SIAMESE FIRE DEPARTMENT CONNECTION
	STANDPIPE W/ FIRE DEPARTMENT VALVE
M	METER

THESE ARE STANDARD ABBREVIATIONS. ALL ABBREVIATIONS SHOWN ABOVE MAY NOT APPEAR ON DRAWINGS.

CLAYTON COUNTY LIBRARY SYSTEM

RIVERDALE LIBRARY ADDITION

420 Valley Hill Rd, Riverdale, GA 30274

HAMMOND ENGINEERING, INC
CONSULTING ENGINEERS
6961 PEACHTREE INDUSTRIAL BLVD. #208
NORCROSS, GEORGIA, 30092
TEL: (678)292-6937
NATHANIEL D. HAMMOND P.E.
MECHANICAL/ELECTRICAL ENGINEER
P.E. #047450

© 2025 THESE DOCUMENTS REMAIN THE PROPERTY OF THE ARCHITECT AND MAY NOT BE USED OR REPRODUCED WITHOUT WRITTEN PERMISSION.

RELEASED FOR CONSTRUCTION

Revisions

No.	Date	Description
	03/19/2025	50% SET
	03/28/2025	100% SET
	03/31/2025	100% SET
	06/10/2025	100% SET
1	11/20/2025	Revision 1

GEORGIA REGISTERED PROFESSIONAL ENGINEER PE047450 NATHANIEL D. HAMMOND

11/20/2025

Gardner Spencer Smith Tench & Jarbeau
A Professional Corporation for the Practice of Architecture
www.gsstj.com
50 Hurt Plaza SW, Suite 1100
Atlanta, Georgia 30303
404.522.8805
404.521.2118 (F)

PROJECT NO.
24105

SHEET TITLE
FIRE PROTECTION GENERAL NOTES, LEGEND AND DESIGN INTENT

SHEET NO.
FP0.01

FIRE PROTECTION DISCLAIMER

1. DETAILS SHOWN ON THIS SHEET ARE DIAGRAMMATIC AND PROVIDED FOR REFERENCE ONLY. FINAL SPRINKLER HEAD LOCATIONS, PIPING ROUTING, FLEXIBLE CONNECTIONS, AND HANGER ARRANGEMENTS SHALL BE DETERMINED BY THE LICENSED FIRE PROTECTION CONTRACTOR.
2. ALL WORK SHALL COMPLY WITH NFPA 13, NFPA 25, AND THE HARTSFIELD-JACKSON ATLANTA INTERNATIONAL AIRPORT (DOA) FIRE SAFETY DIVISION REQUIREMENTS. SHOP DRAWINGS SHALL BE SUBMITTED TO THE DOA FIRE SAFETY DIVISION AND THE CITY OF ATLANTA FIRE MARSHAL FOR REVIEW AND APPROVAL PRIOR TO INSTALLATION.

SPRINKLER KEY NOTES

(1) LOCATIONS SHOWN FOR REFERENCE ONLY. ANY REQUIRED MODIFICATIONS SHALL BE SUBMITTED TO THE DOA FIRE SAFETY DIVISION FOR APPROVAL PRIOR TO INSTALLATION.

NEW OR RELOCATED FIRE SPRINKLER HEADS – CONTRACTOR SHALL PROVIDE UL / FM APPROVED SPRINKLER HEADS MATCHING EXISTING TYPE, K-FACTOR, FINISH, AND TEMPERATURE RATING. FINAL LOCATION AND SPACING SHALL BE PER NFPA 13 AND COORDINATED WITH FINAL CEILING PLAN.

GENERAL FIRE PROTECTION NOTES

1. SPRINKLER HEAD LOCATIONS SHOWN ON THIS PLAN ARE DIAGRAMMATIC AND FOR COORDINATION ONLY.
   FINAL SPRINKLER DESIGN, HYDRAULIC CALCULATIONS, PIPE SIZING, SPRINKLER HEAD SELECTION, SPACING, AND SYSTEM LAYOUT SHALL BE COMPLETED BY A LICENSED FIRE SPRINKLER CONTRACTOR IN ACCORDANCE WITH NFPA 13 AND AHJ REQUIREMENTS.
2. THE FIRE SPRINKLER CONTRACTOR SHALL PROVIDE COMPLETE SHOP DRAWINGS, INCLUDING HYDRAULIC CALCULATIONS, MATERIALS, HANGER DETAILS, HEAD TYPES, FDC LOCATIONS, VALVES, DRAINS, TEST CONNECTIONS, AND SYSTEM ZONES.
3. SPRINKLER HEADS SHALL BE COORDINATED WITH LIGHTING, HVAC DIFFUSERS, CEILING GRIDS, STRUCTURAL MEMBERS, SOFFITS, AND ARCHITECTURAL FEATURES. THE FIRE SPRINKLER CONTRACTOR SHALL ADJUST FINAL LAYOUT AS REQUIRED.
4. ALL FIRE-RATED WALL, FLOOR, AND CEILING PENETRATIONS SHALL BE SEALED USING UL-LISTED FIRESTOP SYSTEMS MATCHING THE REQUIRED ASSEMBLY RATING.
5. ALL SPRINKLER COMPONENTS (HEADS, VALVES, FITTINGS, COUPLINGS) SHALL BE UL/FM LISTED AND INSTALLED PER MANUFACTURER REQUIREMENTS.
6. SPRINKLER COVERAGE AREAS, SPACING, AND HEAD TYPES SHALL BE VERIFIED BY THE FIRE SPRINKLER CONTRACTOR TO MEET THE HAZARD CLASSIFICATION OF EACH ROOM:
7. LIGHT HAZARD: LIBRARY AREAS, OFFICES, READING ROOMS, MEETING SPACES
8. ORDINARY HAZARD GROUP 1: JANITOR/BFP/DCDA ROOM, MECHANICAL ROOMS, STORAGE ROOMS
9. IF THE SPRINKLER SYSTEM OR FIRE ALARM SYSTEM MUST BE DISABLED DURING CONSTRUCTION, A FIRE WATCH SHALL BE PROVIDED IN ACCORDANCE WITH NFPA 241 AND AHJ REQUIREMENTS.

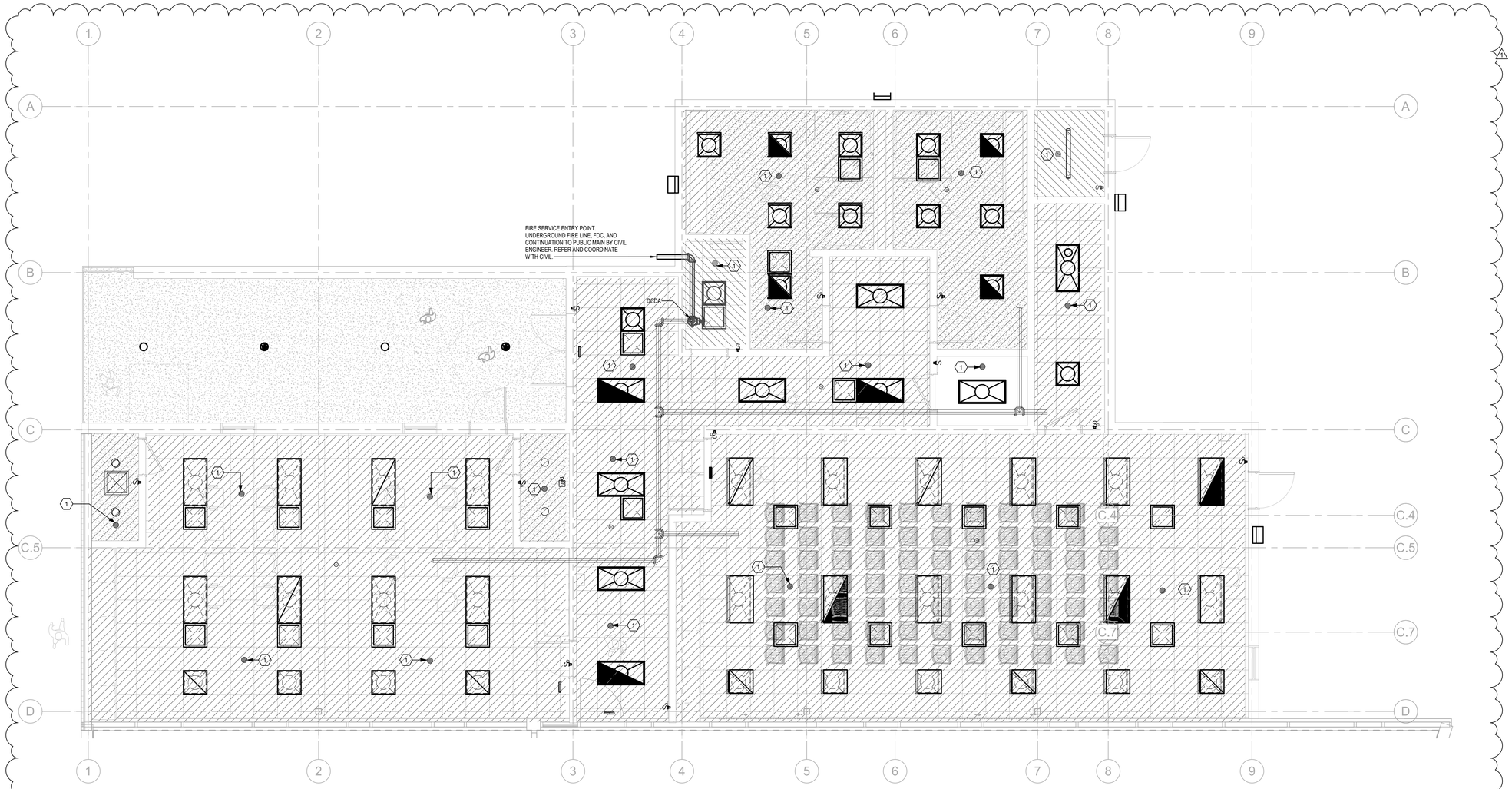

1 **CEILING PLAN - FIRE PROTECTION**
SCALE: 1/4" = 1'-0"
1/4" = 1'-0" 2 0 2 4 8 SCALE FEET

CLAYTON COUNTY LIBRARY SYSTEM

RIVERDALE LIBRARY ADDITION

420 Valley Hill Rd, Riverdale, GA 30274

HAMMOND ENGINEERING, INC
CONSULTING ENGINEERS
6961 PEACHTREE INDUSTRIAL BLVD. #208
NORCROSS, GEORGIA, 30092
TEL: (678)292-6937
NATHANIEL D. HAMMOND P.E.
MECHANICAL/ELECTRICAL ENGINEER
P.E. #047450

© 2025 THESE DOCUMENTS REMAIN THE PROPERTY OF THE ARCHITECT AND MAY NOT BE USED OR REPRODUCED WITHOUT WRITTEN PERMISSION.

RELEASED FOR CONSTRUCTION

Revisions

No.	Date	Description
	03/19/2025	50% SET
	03/28/2025	100% SET
	03/31/2025	100% SET
	06/10/2025	100% SET
1	11/20/2025	Revision 1

GEORGIA REGISTERED PROFESSIONAL ENGINEER NO. PE047450 NATHANIEL D. HAMMOND

11/20/2025

Gardner Spencer Smith Tench & Jarbeau
A Professional Corporation for the Practice of Architecture
www.gsstj.com
50 Hurt Plaza SW, Suite 1100
Atlanta, Georgia 30303
404.522.8805
404.521.2118 (F)

PROJECT NO.
24105

SHEET TITLE
FLOOR PLAN - FIRE PROTECTION

SHEET NO.
FP1.10

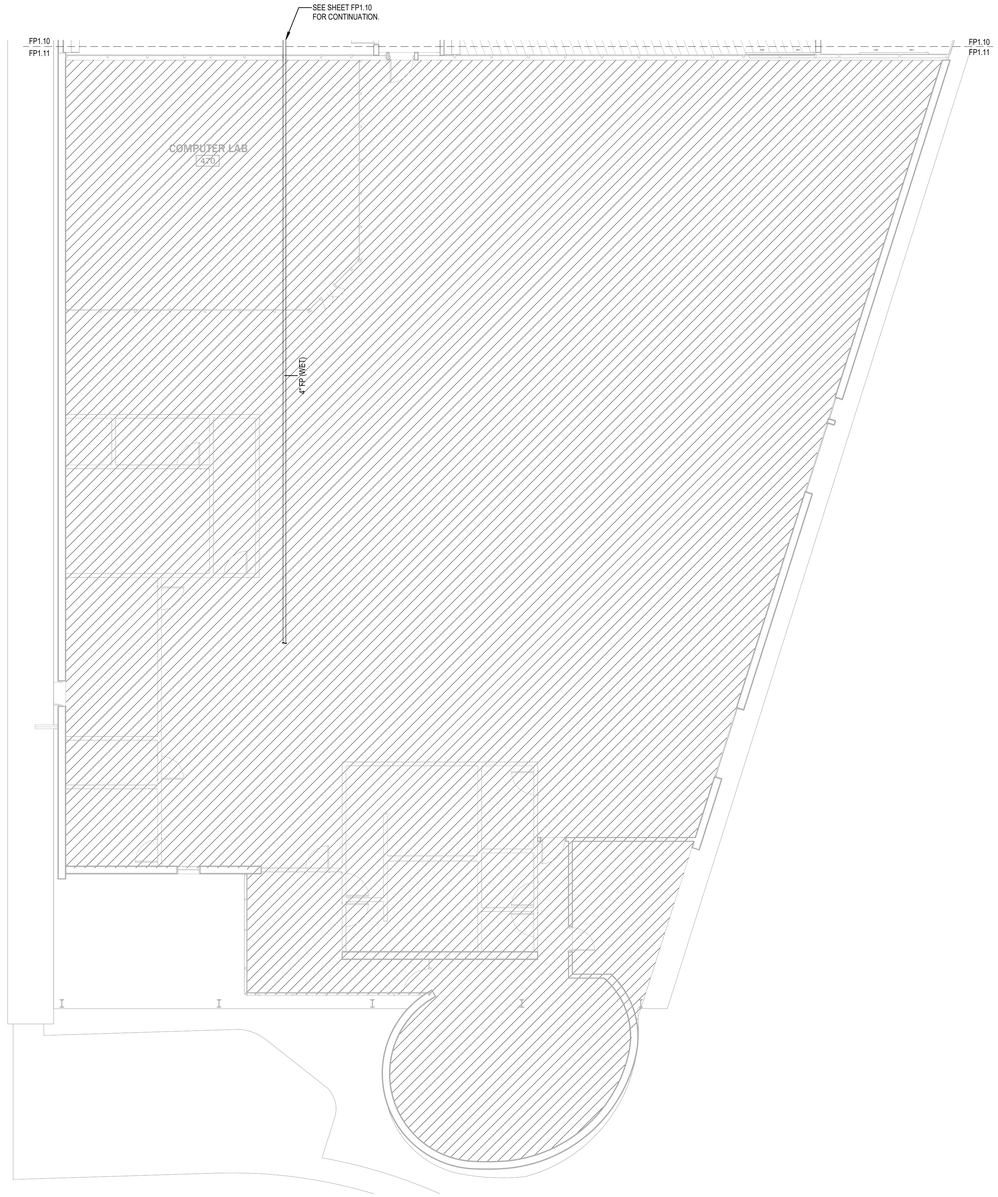

1 FIRE PROTECTION FLOOR PLAN - EXISTING BLDG
1/8" = 1'-0"

HAZARD CLASSIFICATION LEGEND

NFPA 13

	FIRE PROTECTION CONTRACTOR SHALL PROVIDE A COMPLETE CODE COMPLIANT AUTOMATIC WET PIPE SYSTEM . ALL AREAS NOTED ARE TO BE CONSIDERED LIGHT HAZARD WITH A MINIMUM SPRINKLER DISCHARGE DENSITY OF 0.10 GPM/SQ. FT. FOR THE MOST HYDRAULICALLY REMOTE 1,500 SQ. FT. AND A 100 GPM HOSE STREAM, UNLESS OTHERWISE NOTED ON THE DRAWINGS.
	FIRE PROTECTION CONTRACTOR SHALL PROVIDE A COMPLETE CODE COMPLIANT AUTOMATIC WET PIPE SYSTEM . ALL AREAS NOTED ARE TO BE CONSIDERED ORDINARY HAZARD GROUP I WITH A MINIMUM SPRINKLER DISCHARGE DENSITY OF 0.15 GPM/SQ. FT. FOR THE MOST HYDRAULICALLY REMOTE 1,500 SQ. FT. AND A 250 GPM HOSE STREAM. SPRINKLER HEAD SPACING SHALL NOT EXCEED MAXIMUM SPACING DISTANCES SET FORTH BY NFPA 13.
	FIRE PROTECTION CONTRACTOR SHALL PROVIDE A COMPLETE CODE COMPLIANT AUTOMATIC WET PIPE SYSTEM . ALL AREAS NOTED ARE TO BE CONSIDERED ORDINARY HAZARD GROUP 2 WITH A MINIMUM SPRINKLER DISCHARGE DENSITY OF 0.20 GPM/SQ. FT. FOR THE MOST HYDRAULICALLY REMOTE 1,500 SQ. FT. AND A 250 GPM HOSE STREAM. SPRINKLER HEAD SPACING SHALL NOT EXCEED MAXIMUM SPACING DISTANCES SET FORTH BY NFPA 13.
	FIRE PROTECTION CONTRACTOR SHALL PROVIDE A COMPLETE CODE COMPLIANT AUTOMATIC WET PIPE SYSTEM . ALL AREAS NOTED ARE TO BE CONSIDERED EXTRA HAZARD GROUP 1 WITH A MINIMUM SPRINKLER DISCHARGE DENSITY OF 0.30 GPM/SQ. FT. FOR THE MOST HYDRAULICALLY REMOTE 2,500 SQ. FT. AND A 500 GPM HOSE STREAM. SPRINKLER HEAD SPACING SHALL NOT EXCEED MAXIMUM SPACING DISTANCES SET FORTH BY NFPA 13.
	FIRE PROTECTION CONTRACTOR SHALL PROVIDE A COMPLETE CODE COMPLIANT AUTOMATIC WET PIPE SYSTEM . ALL AREAS NOTED ARE TO BE CONSIDERED EXTRA HAZARD GROUP 2 WITH A MINIMUM SPRINKLER DISCHARGE DENSITY OF 0.40 GPM/SQ. FT. FOR THE MOST HYDRAULICALLY REMOTE 3,500 SQ. FT. AND A 500 GPM HOSE STREAM. SPRINKLER HEAD SPACING SHALL NOT EXCEED MAXIMUM SPACING DISTANCES SET FORTH BY NFPA 13.

CLAYTON COUNTY LIBRARY SYSTEM

RIVERDALE LIBRARY ADDITION

420 Valley Hill Rd, Riverdale, GA 30274

HAMMOND ENGINEERING, INC
CONSULTING ENGINEERS
6961 PEACHTREE INDUSTRIAL BLVD. #208
NORCROSS, GEORGIA, 30092
TEL: (678)292-6937
NATHANIEL D. HAMMOND P.E.
MECHANICAL/ELECTRICAL ENGINEER
P.E. #047450

© 2025 - THESE DOCUMENTS REMAIN THE PROPERTY OF THE ARCHITECT AND MAY NOT BE USED OR REPRODUCED WITHOUT WRITTEN PERMISSION.

RELEASED FOR CONSTRUCTION

Revisions

No.	Date	Description
	03/19/2025	50% SET
	03/28/2025	100% SET
	03/31/2025	100% SET
	06/10/2025	100% SET

GEORGIA REGISTERED PROFESSIONAL ENGINEER NO. PE047450 NATHANIEL D. HAMMOND

06/10/2025

Gardner Spencer Smith Tench & Jarbeau
A Professional Corporation
for the Practice of Architecture
www.gsstj.com

50 Hurt Plaza SW,
Suite 1100
Atlanta, Georgia
30303
404.522.8805
404.521.2118 (F)

PROJECT NO.

24105

SHEET TITLE

FIRE PROTECTION FLOOR PLAN - EXISTING BLDG

SHEET NO.

FP1.11