NOTES:

1. SPECIFICATION: REFER TO EIC-MSG-SOW-017 & EIC-MSG-SPC-008 DOCUMENTS FOR COIL SPECIFICATIONS, Q.A, AND MANUFACTURING METHODS.
2. CONDUCTOR IS COPPER AWG SIZE 10 SQUARE, HEAVY BUILD NEMA MW 1000 TYPE 20-C, NATURAL COLOR UNLUBRICATED.
3. COIL SHALL BE WOUND OF A CONTINUOUS CONDUCTOR, NO SPLICES ALONG THE LENGTH OF CONDUCTOR ARE PERMITTED..
4. WIND FOR 8 TURNS INSIDE LAYER, 12 TURNS OUTSIDE LAYER LEAVING A MINIMUM OF 35" AT WINDING ENDS FOR LEADS TO TERMINAL BLOCK.
5. FILLER BLOCKS SHALL BE CUT TO FIT LARGE GAPS, AND SHALL BE MADE OF RADIATION RESISTANT MATERIAL. REFER TO EIC-MSG-SPC-008.
6. ADJUST FOR KEYSTONING TO MEET FINAL DIMENSIONS.

REVISION APPROVALS

REV	ECN NO.	DESCRIPTION	DATE	BY	CHK	DES	ENG	SUPV
A	EIC-0761	INITIAL RELEASE	05/13/26	VC	JK	VD	RL	GM

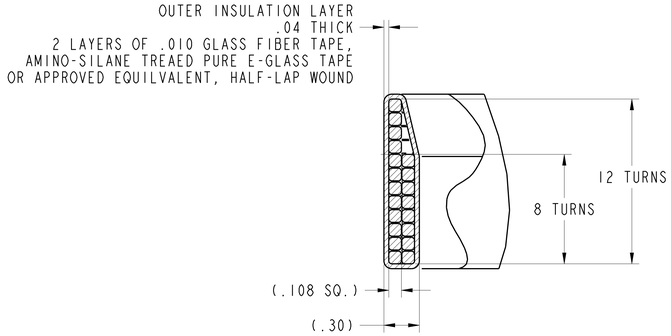

DETAIL A
SCALE 2/1

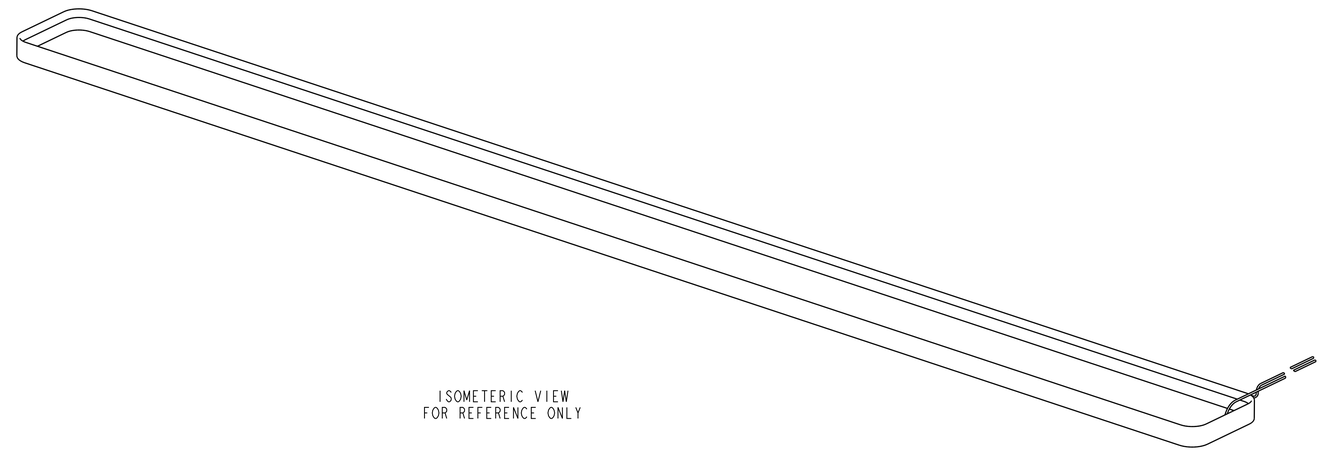

ISOMETERIC VIEW
FOR REFERENCE ONLY

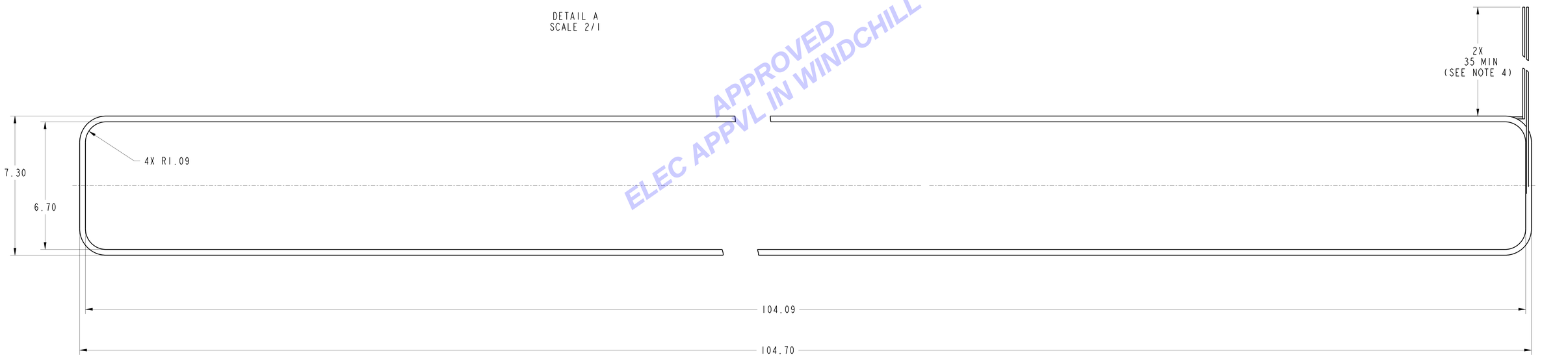

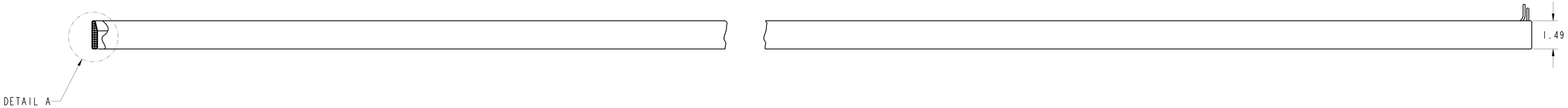

APPROVED
ELEC APPVL IN WINDCHILL

ENVELOPE DRAWING

THIS DOCUMENT CONTAINS TECHNICAL DATA AND/OR TECHNOLOGY THAT MAY BE EXPORT RESTRICTED. THE EXPORT, RE-EXPORT, OR RELEASE OF THIS TECHNICAL DATA TO FOREIGN PERSONS, WHETHER IN THE UNITED STATES OR ABROAD, WITHOUT PROPER AUTHORIZATION, MAY CONSTITUTE A VIOLATION OF U.S. EXPORT CONTROL LAWS. IT IS THE RESPONSIBILITY OF ALL PARTIES INVOLVED IN THE USE, HANDLING, OR DISSEMINATION OF THIS TECHNICAL DATA AND/OR TECHNOLOGY TO COMPLY WITH U.S. EXPORT CONTROL LAWS AND REGULATIONS. BY ACCESSING THIS DOCUMENT, YOU ACKNOWLEDGE AND AGREE TO COMPLY WITH ALL APPLICABLE U.S. EXPORT CONTROL LAWS AND REGULATIONS.

USED ON DRAWING NO.	QTY. PER ASS'Y.
2104M0014	1
APPLICATION	

INTERPRET IN GENERAL ACCORDANCE WITH ASME Y14.5 2009

UNLESS OTHERWISE SPECIFIED

DIMENSIONS ARE IN INCHES
DECIMAL TOLERANCES
.X ± .030
.XX ± .015
.XXX ± .005
ANGULAR TOLERANCE ±1°

125 FINISH — BREAK SHARP EDGES MAX. .03 MIN. .015

DRAWN BY	V. CHIECHI	05/13/26
CHECKED BY	J. KANDORA	
DESIGN APPROVAL	V. DE MONTE	05/13/26
ENG / PHY SUPPORT	R. LOVELACE	05/13/26
SUPERVISOR APPROVAL	G. MAHLER	05/13/26
CEE / CMS DIVISION HEAD		
Q.A.		
SAFETY / RSC DEPARTMENT CHAIR		

EIC

ELECTRON-ION COLLIDER
BROOKHAVEN NATIONAL LABORATORY
UPTON, N.Y. 11973

ELECTRON STORAGE RING
ESR D1/D3 DIPOLE MAGNET
TRIM COIL, BOTTOM

SIZE	DRAWING NUMBER:	REV.
E	2104M0024	A

Q.A. CATEGORY A3 | SCALE: 1/2 | WEIGHT: 23.3 | SHEET 1 OF 1

DWG NO 2104M0024 | SHT 1 OF 1 | REV A

CREO