PERFORMANCE WORK STATEMENT
FOR CLEANING AT
15 LAUNCH CONTROL CENTERS (LCC)

Malmstrom AFB MT
March 12th, 2026

LCC CUSTODIAL SERVICE

Table of Contents

1. Description of Services	**Page 1**
2. General Information	**Page 6**
3. Performance Assessment	**Page 7**
4. Government Furnished Property and Services	**Page 7**
5. Installation Information	**Page 8**

APPENDICES

A. Estimated Square Footage	**Page 13**
B. Distance Chart	**Page 14**
C. Service Area Map	**Page 15**
D. Cleaning Diagrams (1-6)	**Page 16**

PERFORMANCE WORK STATEMENT
FOR CLEANING
LAUNCH CONTROL CENTERS (15)

1. <u>Description of Services.</u> The Contractor shall provide all personnel, equipment, tools, materials, vehicles, supervision, transportation and other items and services necessary to perform custodial services as defined in this Performance Work Statement (PWS) at (15) Launch Control Centers (LCCs). The Contractor shall perform to the standards in the contract as well as comply with all local, state, and federal regulations. 5 LCC's cleaned per year.

1.1. Facility Cleaning Services.

1.1.1. Non-Carpeted Floors (Hard Floors: Rubber Tiles, Vinyl, Concrete, Metal, etc…). Hard floors shall be free of grit, soil, dust, scuff and heel marks, stains, spills, debris, litter and other foreign matter by effective cleaning. Prior to cleaning hard floors all caution tape will be removed and residue cleaned so as to be free of debris. Cleaning shall be accomplished by the most appropriate method (vacuum, sweep, dust mop, damp mop, spot clean, etc.) and with cleaning solutions if applicable, for specific floor type. After cleaning, floor surfaces shall have a uniform, clean appearance without streaks, swirl marks, detergent residue, or any evidence of soil, stain, film, or standing water. All tears, burns, or other damage shall be brought to the attention of the facility manager. Flooring will be replaced as necessary. Baseboards, corners, and wall/floor edges shall also be cleaned. Chairs, trash receptacles, carpet rectangles, and other easily removable items shall be moved to maintain floors underneath these items and returned to their original and proper position after cleaning.

1.2. Acoustical Enclosure

1.2.1. Bed Module.

1.2.1.1. Clean and Disinfect. Mattress will be removed and sanitized. Cleaning shall be accomplished in accordance with mattress manufacturer's recommendations. Any spots and/or spills shall be removed by mattress manufacturer's approved methods or other commercially accepted practices. Rack area, after mattress removal, shall be free of grit, soil, dust, stains, spills, debris, litter and other foreign matter by effective cleaning followed by disinfection. Module lining will be cleaned in accordance with manufacturer's approved methods or other commercially accepted practices. Curtains shall be removed and cleaned in accordance with curtain manufacturer's recommendations or other commercially accepted practices. Module will be unplugged from the wall prior to fan cleaning. Module fans will be cleaned on exterior. Cover of fan shall be removed to dust interior, including blades, with commercially accepted practices. Lighting units shall be free of grit, soil and dust. Storage area underneath the module shall be free of grit, soil, dust, stains, spills, debris, litter and other foreign matter by effective cleaning. Easily moveable items shall be moved to maintain area and replaced following cleaning. Mattress, curtains and fan shall be replaced in proper position

following cleaning. Module shall be plugged into the wall following cleaning.

1.2.1.1 Steel framing and the top of the fan module in the enclosed area above the bed mod shall be free of grit, soil, dust, stains, spills, debris litter and other foreign matter.

1.2.2. Console

1.2.2.1 Clean and Disinfect. Remove Operator Input Device (OID) metal cover and plexi glass, both shall be cleaned and sanitized. The keyboard will not be removed from the space. Any damage or severe scratches caused by the contractor during cleaning of the plexi glass will be brought to the attention of the facility manager. Areas in rectangles displayed in Diagrams 2, 3 and 4 shall be cleaned and sanitized. Areas in circles shall be wiped cleaned to remove visible dirt and smudges. Areas with "X" shall not be opened but the outside of the doors shall be wiped to remove visible dirt and smudges. Sides and top shall be wiped to remove visible dirt and smudges. Storage units shall be emptied cleaned with the most appropriate method and items replaced. Buttons may be gently pressed in order to facilitate cleaning. At no time shall switches be handled.

1.2.3 Chairs and Rails

1.2.3.1 Clean and Disinfect. Chair cushions removed, cleaned and sanitized in accordance with cushion manufacturer's approved methods or other commercially accepted practice.

1.2.3.2 Chair mechanical portion will be cleaned to remove dirt and debris. Chair rails will be free of soil, dirt, debris, litter and other foreign matter. Chairs will not be removed from the rails.

1.2.4 Kitchen Services Group

1.2.4.1 Clean and Disinfect. All surfaces to include shelf, microwave, storage drawer, hot plate, refrigerator coils and refrigerator will be cleaned. Refrigerator and microwave shall be smudge free on top, sides and inside. Removal of both components may be necessary to achieve objective for shelf area. All components that are necessary to remove shall be replaced.

1.2.5 Restrooms

1.2.5.1 Clean and Disinfect. All surfaces of sink, toilet, plumbing fixtures, mirror, paper towel dispenser, soap dispenser, entry doors (including handle, kick plates, ventilation grates and metal guards), walls and other such surfaces shall be cleaned and disinfected using germicidal detergent. Restrooms shall have a clean scent or no odor at all. Toilets will be free of spots, water spots, scale buildup, soap scum, odors and any other deposits. Mirrors shall be clean and have no streaks or other removable matter. Partitions shall be smudge, and stain free. All vents shall be cleaned by removing the cover and wiping down the fan blades. Restroom sink, countertop, and fixtures shall be free from water and scale deposits, soil, streaks, and other removable matter. Walls shall be free of all film, spots and detergent buildup.

1.2.5.2 Restroom Floor Care. All floor surfaces shall be cleaned in accordance with paragraph 1.1.1 of this document by effective cleaning. Walls and floor shall be free of dirt, scum, mildew and residue.

1.2.6 Console Cabinets. Exterior of the console cabinets shall be free of grit, dust, stains, spills, debris, litter and other foreign matter by effective cleaning. Cleaning shall be accomplished by the most appropriate method (vacuum, sweep, spot clean, etc.) and with cleaning solutions if applicable. After cleaning, surfaces shall have a uniform clean appearance. Doors and exterior panels shall also be cleaned. Easily moveable items shall be moved to maintain surfaces underneath these items and returned to their original and proper position after cleaning.

1.2.7 Headliners. Headliners are the rectangular articles covering the ceiling which are attached by Velcro. Headliners shall be vacuumed, wiped clean with a damp cloth and made free of dust.

1.2.7.1 Steel framing and conduit visible around headliners will be free of dust. Cleaning shall be accomplished by the most appropriate method (vacuum, dusting, etc.)

1.2.8 Equipment Racks, Hydraulic Control Unit (HCU), Emergency Air Conditioning Unit (EACU). All surfaces will be clear of all marks, dirt, smudges, scuffs and other foreign matter. In the event the equipment rack has a plexi glass cover protecting circuit breakers, said glass shall not be lifted in order to clean circuit breaker area. The glass shall remain closed at all times. Buttons, switches, knobs and ports shall not be touched nor cleaned.

1.2.9 Shock Isolators and Associated Equipment. All surfaces will be clear of all marks, dirt, and smudges**.** Signatures, murals and paintings shall not be removed but cleaned in a manner that preserves the piece. Questions pertaining to signatures, murals and paintings shall be directed to on duty escort(s) for further guidance. High pressure hoses shall not be handled. Failure to comply could result in personnel injury or death. Shock isolators contain delicate valve seats and stems which shall not be handled.

1.2.10 Power Panel, Oxygen Regeneration Unit. All surfaces will be clear of all marks, dirt, and smudges. Equipment shall not be opened. Easily moveable items shall be moved to maintain surfaces underneath these items and returned to their original and proper position after cleaning.

1.3 Exterior of the Acoustical Enclosure

1.3.1 Top of Acoustical Enclosure. Ducts and plenums, fan motors, ECS equipment, all walking surfaces and all exterior surfaces shall be free of grit, dust, debris, litter and other foreign matter. Cleaning shall be accomplished by the most appropriate method (vacuum, sweep, spot clean, etc.). Due to the setup of the air flow system, this method cannot be blowing the grit, dust, debris, litter and other foreign matter off the top. After cleaning, surfaces shall have a uniform clean appearance.

1.3.2 Concrete Exterior. Surfaces shall be cleaned in accordance with paragraph 1.1.2

and 1.2.9.

1.4 Emergency Shut Off Valve (ESOV) and Catchment Basin. Clean ESOV and Catchment Basin of all foreign material and debris. This area could be contaminated by human waste. The contractor will take all necessary precautions to include the use of fall protection and hardhats in this area. See Diagrams 5 and 6 on pages 19 and 20 for ESOV and Catchment Basin location.

1.5 Training. Contractor shall provide own training and certification for necessary cleaning in conjunction with necessary safety equipment in accordance with paragraph 5.10 of this document.

1.6 Route Parameters. The Contractor shall establish routes in coordination with Missile Operations and Maintenance schedulers to each Missile Alert Facility using the attached map. Cleaning shall be accomplished between the hours of 0730 and 1630 on the days specified. Cleaning outside these hours shall require prior approval of the owning squadron or Contracting Officer.

2. General Information.

2.1 The Contractor is solely responsible for compliance with OSHA standards for the protection of their employees. The Contractor shall ensure specific safety requirements in safety standards, Air Force technical orders, and CEM21-SM80-19FM Handbook are complied with by Contractor Personnel when non-compliance would clearly present the potential to harm or damage government resources (see AFI 21-101, paragraph 2.16.). The Air Force is not responsible for ensuring that Contractors comply with "personal" safety requirements that do not present the potential to damage government resources.

2.2. Environmental Compliance. Contractor shall be knowledgeable of and comply with all applicable Federal, State and local regulations and requirements regarding environmental protection.

2.3 Special Cleaning Requirements

2.3.1 Cleaning Requirements LCC.

2.3.1.1 Disinfecting, Cleaning and Sanitizing Solutions. The Contractor shall store cleaning solutions in a non-brand name container and/or clearly labeled as "BLEACH WATER".

Cleaning Solution: Use of soap and water to remove visibly soiled areas is authorized.

Disinfecting Solution: Use of a chemical agent to prevent infection from non-food surfaces and equipment by destroying harmful bacteria and other microbes is authorized. These chemicals must be registered with the US EPA and so state on the label.
- Examples:
- Liquid chlorine bleach (without scent), one-quarter (1/4) cup (5.25% sodium

hypochlorite) in one (1) gallon of water (or 1 Tablespoon bleach in 1 quart water), made fresh daily.
- Quaternary Ammonium Compound mix at 400 ppm or as directed and confirm with test papers.
- Pine Oils (must be at least 70% pine oil) follow manufacturer's directions.
- Commercial Disinfectants follow manufacturer's instructions.

Sanitizing Solution: Provided is a limited list of chemical agents that reduce the number of bacteria and viruses to a safe level for public health requirements. Use sanitizers on food contaminated surfaces and equipment.
- Examples:
- Liquid chlorine bleach (without scent), 1 Tablespoon (5.25% sodium hypochlorite) in one (1) gallon of water, made fresh daily; must be left on for 2 minutes to be effective.
- Quaternary Ammonium Compound mix as directed and confirm with test papers. Check with label to ensure it is recommended for food surfaces. Ammonium compounds are deactivated by soap and detergents and may not protect against all bacteria. Follow manufacturer's instructions and allow time to work.

3. Performance Assessment

3.1 Compliance. This method requires the contracting officer representative to employ a "spot check" style of evaluation to ensure compliance at the end of each LCC cleaning. The team or individual performing the "spot check" evaluation must be a military member(s) familiar with the LCC.

4. Government Furnished Property and Services

4.1 Government Furnished Utilities. The Government will furnish electricity, water and sewage as necessary for accomplishment of work in accordance with this contract unless unavailable.

4.1.1 Contractor shall provide generator, at least 150 feet of extension cords and site lighting for the circumstances in which power is not available in the LCC. Generator shall stay outside of buildings.

4.2 Utility Conservation. The Contractor shall adhere to all base level utility conservation practices or requirements. The Contractor shall be responsible for operating under conditions that prevent waste of utilities.

4.3 Telephone Service. The Government shall only provide base and local commercial telephone service. Long distance service, if desired, shall be at the contractor's expense. Contractor shall only be able to use personal cellphones prior to processing through security office to begin work in LCC.

4.4 Security, Fire and Medical Services. The Government will provide police and fire protection. In the event of a medical emergency, commercial ambulance service for transporting an injured employee to a local hospital is available at the cost of the

contractor.

4.5 Solid Waste Collection and Disposal. The Contractor shall remove all waste from the site generated during cleaning operations.

5. Installation Information

5.1 Hours of Operation. The contractor shall perform the services required under this contract during the following hours. The contractor is not required to perform services on Federal Holidays.

5.1.1 Normal Base Hours. Malmstrom AFB hours of operation are from 7:00 AM to 5:00 PM, Monday to Friday excluding federal holidays; while some buildings operate 24 hours a day, seven days a week, including holidays. The Contractor may find it necessary to deviate from the normal base hours of operation, to ensure timely completion of work under this PWS at no additional cost to the government.

5.2 Federal Holidays.
New Year's Day - 1 January
Martin Luther King Day - 3rd Monday in January
Washington's Birthday - 3rd Monday in February
Memorial Day - last Monday in May
Juneteenth - 19 June
Independence Day - 4 July
Labor Day - 1st Monday in September
Columbus Day - 2nd Monday in October
Veteran's Day - 11 November
Thanksgiving Day - 4th Thursday in November
Christmas Day - 25 December

If these holidays fall on Saturday, the preceding Friday will be observed. If these holidays fall on Sunday, the following Monday will be observed. If a holiday falls on a scheduled service day, the Contractor will be responsible for rescheduling services for the first day post the holiday observance.

5.2.1. Base Down Day. Base down days, usually classified as AFGSC Family Days, are scheduled randomly throughout the year. Down days are normal duty days which are declared time off by the acting authorizing official for specific personnel. Contractor personnel will be required to work on base down days. The Contractor will be notified one to two weeks before the down day.

5.3 Base Closures. Work scheduled but not accomplished because of base closure due to weather, exercises, or actual alert, will be accomplished as soon as possible after reopening the base.

5.4 Contractor/Employee Base Pass and Identification, Special Clearances and Vehicle Passes. The contractor shall comply with all requirements and procedures IAW AFFAR 5353.242-9000, Contractor Access to Air Force Installations and Local Clause

H-514. All documentation shall be submitted at the pre-performance conference.

5.4.1 Termination Requirements. Upon completion or termination of the contract, the Contractor shall surrender all Government Issued Identification or passes to include, all vehicle identification to the Security Forces at the Visitor Control Center.

5.4.2 Heightened Security and FPCONs. All personnel are required to abide by all real world (Force Protection Conditions) FPCON measures, RAMs, shelter-in-place, lock-down notices as directed (i.e. mandatory badge/ID check and hand carried items will be searched). During periods of heightened security and FPCONs, the Contractor shall still be responsible for meeting the same contractual cleaning schedule unless notified by the Contracting Officer or QAP/COR that cleaning service has been temporarily suspended or restricted. During times of heightened security, delays at the entry gates should be expected; also movement on to and around the base will be significantly restricted.

5.4.3 Contractor's Vehicles and Drivers. All drivers will have in their possession the following documentation: valid driver's license, current vehicle registration and current insurance card. Any driver who does not have these items will be turned away and denied access to the installation. Any driver who is not on the Entry Authorization List (EAL) will be turned away and denied access to the installation. No privately owned vehicles are authorized on the MAF, all vehicles must be company owned and identified as such.

5.5 Cleaning Supplies. The contractor shall furnish a listing of all cleaning supplies utilized during the contract period to the CO not later than the pre-performance conference for acceptance by the CO. After award, any new cleaning supplies added to the contract will need acceptance before being used on the installation. The cleaning inventory supply list shall contain the following information:

-Product name
-Manufacturer
-Item use
-Disposal procedures if material remains after usage
-Storage of item

The contractor shall be responsible for the proper disposal of all their cleaning supplies. A material safety data sheet (MSDS) shall also be provided for each cleaning and restroom supply item and employees will be trained, by the contractor, on the proper use and disposal of each item. All cleaning supplies shall be non-flammable.

NOTE: *Products containing chlorofluorocarbons (CFC's) or ozone depleting substances shall not be allowed or approved for use.*

5.5.1 Hazardous Material Identification. Safety Data Sheets (SDS) are required as specified in the latest version of Federal Standard No. 313 (including revisions adopted during the term of the contract) for any other material designated by a government technical representative as potentially hazardous and requiring safety controls. SDSs must be submitted by the Contractor upon contract award. Failure to provide SDSs or

certificate when requested could result in the Contractor being considered non-responsive and result in termination of the contract.

5.6 HAZMART. The government (HAZMART personnel) will inventory all chemicals that the Contractor brings on to Malmstrom AFB or any property under its control. Any products that meet the criteria of "Hazardous Waste" must be bar coded and tracked until permanently removed from government property. The inventory will be performed prior to commencement of work. Criteria for identifying hazardous waste, is contained in Subpart C of 40 CFR, Part 261.

5.6.1 Spill Response. The Contractor will be briefed on the spill response procedures at the pre-performance conference. The Contractor is responsible to report and promptly cleanup all spills in a manner consistent with current environmental regulations. In the event that it is necessary to utilize government material, equipment or personnel to clean up a Contractor caused spill, the Contractor shall be required to reimburse the government for all associated costs.

5.7 Hazardous Material/ Waste Management. The Contractor will be briefed on Hazardous Material / Waste Management Plan at the pre-performance conference.

5.8 Hazardous Material Handling. The Contractor shall have approval from the base Bio-Environmental (BEE) and HAZMART sections prior to purchasing, handling, using, and storing any chemicals, solvents, lubricants, and other products that require MSDSs. The Contractor shall identify these materials and products on Air Force Form 3952 Chemical/Hazardous Material Authorization Request, Process Identification Form, and Shop Disposal Form. The Contractor shall provide one copy of the MSDSs for each item to BEE and HAZMART sections for review prior to any chemicals being brought onto Malmstrom AFB. The Contractor shall maintain one copy of the MSDSs for each hazardous material line item used within the work center.

The Contractor shall not use products that are or contain Toxic 17 chemicals, Extremely Hazardous Substances (EHS), Ozone Depleting Substances (ODS), and/or Persistent Bioaccumulative and Toxic (PBT) chemicals. Any HM containing one of these banned substances will not be allowed on base.

5.9 Training.

5.9.1. The Contractor shall ensure all employees complete the local Air Force Hazardous Communication, HAZMART, and hazardous waste training.

5.9.2. Harness/Lanyard. Requirements for the Personal Fall Arrest System shall be found in AFI 91-203, 13.4.6. Training requirements shall be found in AFI 91-203, 13.3. AFI 91-203, 13.1. states that workers exposed to a fall of four (4) feet or more must wear fall protection. T.O. 21M-LGM30G-1-24 page xxxvi states workers shall use fall protection devices when suitable fall arresting system attach/anchor points exist in the vicinity of work being performed. Personal shall meet or exceed standards set forth by American National Standards

Institute (ANSI) Z359.1. Harness/Lanyard shall be provided by contractor.

5.9.3. Hard Hats. Requirements shall be found in in AFI 91-203 14.4.5.1. Additionally, T.O. 21M-LGM30G-1-24 page xxxvi identifies that personnel working beneath the suspended floor or along the catwalk around the acoustical enclosure shall wear a safety hat. Industry and manufacturer standards shall be met on hard hats in order to meet ANSI Z89.1 standards. Hard hats shall be provided by contractor.

5.9.4. Personnel shall not wear any objects such as rings, metal wrist bands, metal watch chains, etc. when climbing on or around the LCC acoustical enclosure and any ladder.

5.10 Weapons, Firearms, and Ammunition. Contractor employees are prohibited from possessing weapons, firearms, or ammunition, on themselves or within their Contractor-owned or privately owned vehicle while within the fenced area of Malmstrom AFB and any Missile Alert Facility

5.11 Controlled Unclassified Information (CUI). The contractor does not require access to any CUI or other sensitive information and is not authorized any access in the performance of these duties.

5.12 Multimedia Recording Requirements. The Contractor will comply with EAP-STRAT Volume 16, Chapter 15, Multimedia Recording requirements. In accordance with EAP-STRAT Volume 16, Chapter 15, paragraph 1.b.2. states the use of personally owned photographic, video, audio recording equipment, and personally owned cell phones (with or without recording capability), computers, audio players, gaming systems, and associated media is prohibited in the LCC. The only exception to this rule is topside at the MAF with the permission of the Facility Manager.

5.13 Personnel. Contractor personnel shall present a neat appearance. Contractor personnel shall be easily recognizable while on the installation in conjunction with this contract. This shall be accomplished through the wear of distinctive clothing, overcoats, or hats, bearing the company name or logo. The coloring or design of the items selected should be such that identifies personnel easily and quickly for reasons of safety and personal protection. The government is authorized to restrict the employment under the contract of any Contractor employee or prospective Contractor employee, who is identified as a potential threat to the health, safety, security, general wellbeing, or operational mission of the installation and its population.

5.14 Reporting Requirements. Contractor personnel shall report to an appropriate authority any information or circumstances of which they are aware may pose a threat to the security of DoD personnel, Contractor personnel, resources, and classified or unclassified defense information. Contractor personnel shall report any sensitive information (classified or CUI) discovered or accessed IAW the procedures outlined in the Initial Information Protection training provided.

5.15 Physical Security. The contractor shall be responsible for safeguarding all

government property and controlled forms provided for the Contractor use. At the end of each work period, all government facilities, equipment, and materials shall be secured.

5.16 Safety Requirements and Reports. The contractor shall perform work in a safe manner as required by OSHA Safety and Health Requirements. Provide a verbal report to the CO as soon as possible of each occurrence of damage to Government property or an accident resulting in death, injury, occupational disease, or adverse environmental impact. Provide a completed copy of required Accident Investigation Reports to the CO within five calendar days of each occurrence.

5.17 Contractor Registration. Contractor shall be required to invoice through Wide Area Workflow (WAWF) System at https://wawf.eb.mil. More information regarding WAWF will be provided upon contract award.

5.18 Cleaning Schedule. Prior to new Fiscal Year, the Requirement Owner will request scheduled sites from the Squadrons with specific sites and dates. Once finalized, the Requirement Owner will notify the Contractor, via email, the Sites and Dates for cleaning for the Fiscal Year. In addition, the Contractor will be notified at least two (2) weeks prior) to the upcoming site cleaning. A confirmation call and/or email of said site will be sent one (1) week prior to the identified date. Due to the operational national security requirements of the LCC, there may be changes to the location or date on short notice. In this case, the contractor will be notified as early as possible via email of the newly scheduled location and/or date.

6.0 APPENDICES. The government will make all publications, forms, references and report formats listed available. Publications can be accessed on-line at http://www.e-publishing.af.mil/. Supplements or amendments to listed publication from any organizational level may be issued during the life of the contract.

APPENDIX A

ESTIMATED SQUARE FOOTAGE

Facility Name	Description	User/Agency	Restroom SF	Carpet SF	Hard Floor SF	Total Cleaned SF per Facility
A-01	LCC	341 OG	8.5	160	100	260
B-01	LCC	341 OG	8.5	160	100	260
C-01	LCC	341 OG	8.5	160	100	260
D-01	LCC	341 OG	8.5	160	100	260
E-01	LCC	341 OG	8.5	160	100	260
F-01	LCC	341 OG	8.5	160	100	260
G-01	LCC	341 OG	8.5	160	100	260
H-01	LCC	341 OG	8.5	160	100	260
I-01	LCC	341 OG	8.5	160	100	260
J-01	LCC	341 OG	8.5	160	100	260
K-01	LCC	341 OG	8.5	160	100	260
L-01	LCC	341 OG	8.5	160	100	260
M-01	LCC	341 OG	8.5	160	100	260
M-01	LCC	341 OG	8.5	160	100	260
O-01	LCC	341 OG	8.5	160	100	260
Totals:			**127.5**	**2400**	**1500**	**3900**

APPENDIX B

DISTANCE CHART

FACILITY	DISTANCE
Distance To MAF from Malmstrom Air Force Base	Miles
A-1	27
B-1	51
C-1	64
D-1	98
E-1	135
F-1	67
G-1	52
H-1	47
I-1	51
J-1	40
K-1	123
L-1	103
M-1	94
N-1	122
O-1	139

APPENDIX C

SERVICE AREA MAP

Red Dots Depict Approximate Location of MAFs

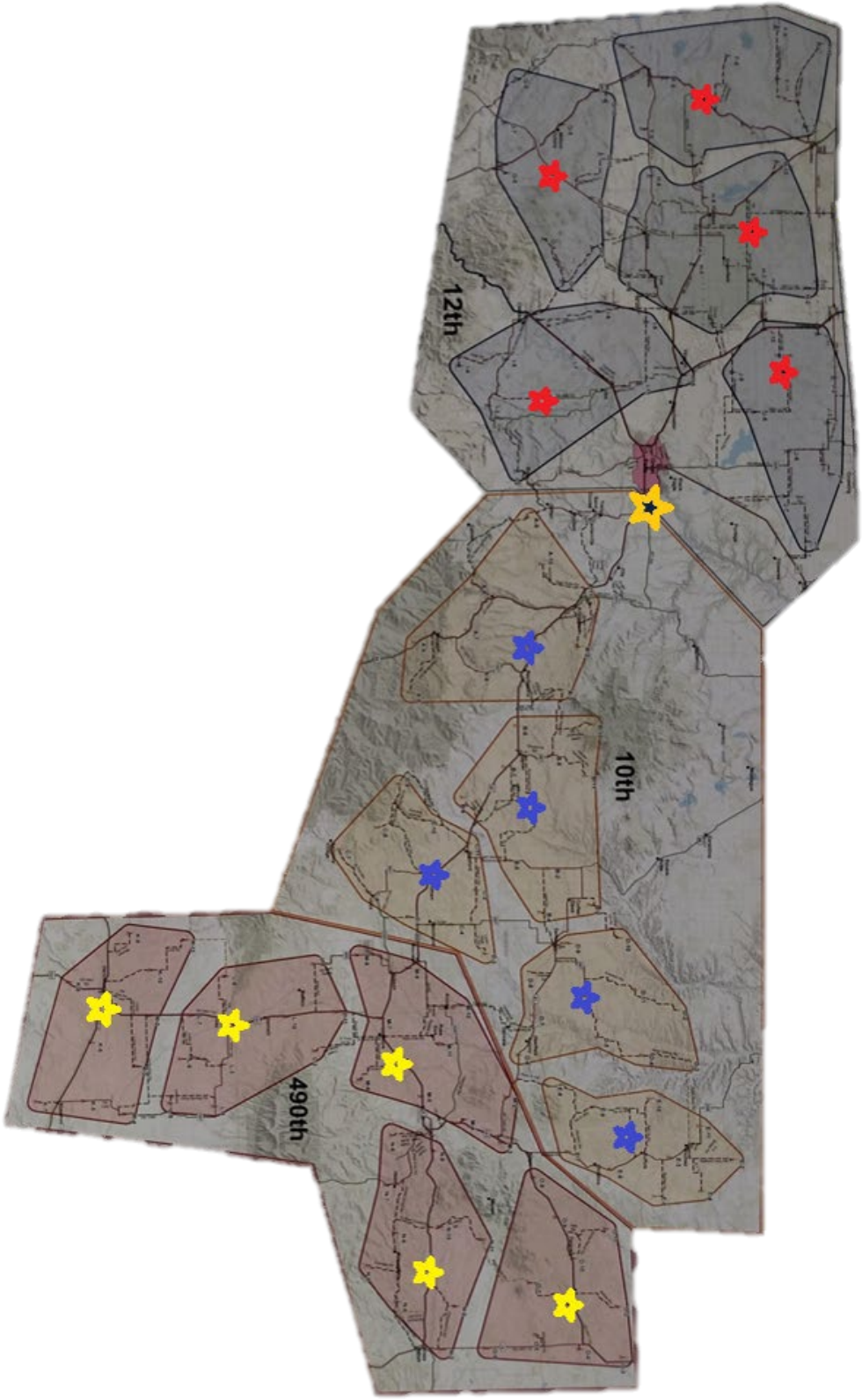

CLEANING DIAGRAMS

Diagram 1 Launch Control Center

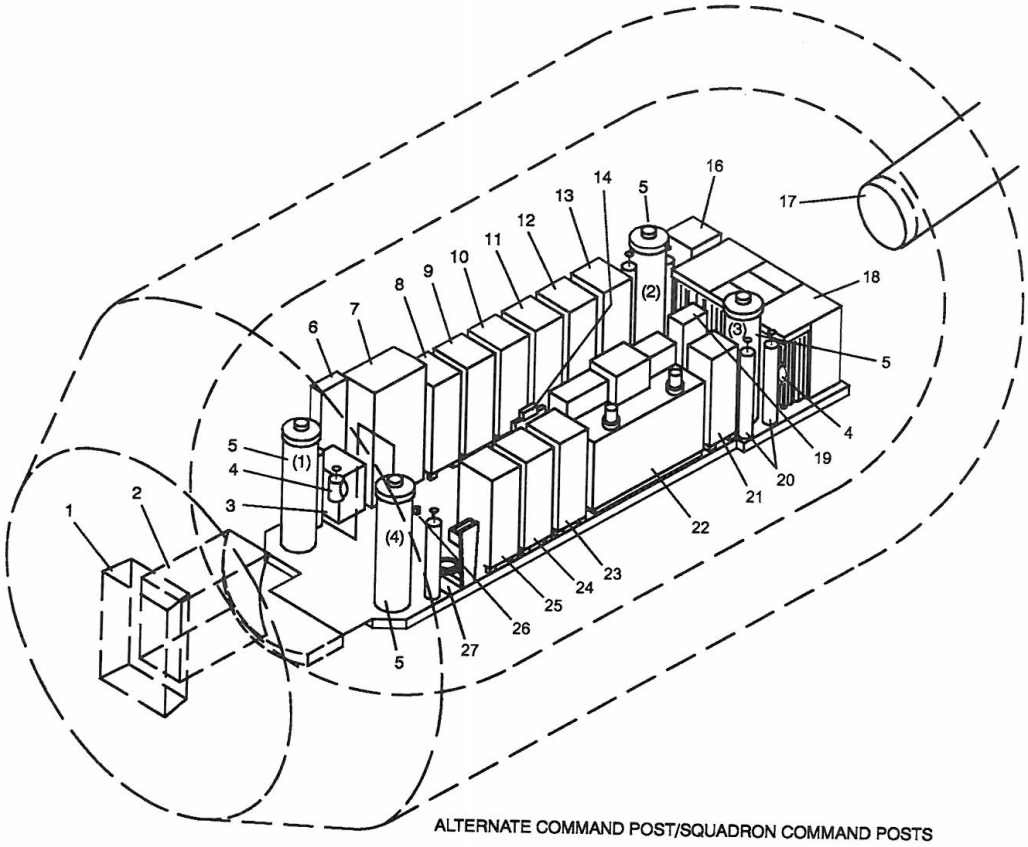

LEGEND

1. BLAST DOOR
2. HORIZONTAL TUNNEL
3. OXYGEN REGENERATION UNIT
4. FIRE EXTINGUISHER (TYPICAL LOCATION)
5. SHOCK ISOLATORS (4 PLACES)
6. LCPA PANEL
7. EMERGENCY AIR CONDITIONING UNIT
8. COMMAND MESSAGE PROCESSING GROUP
9. TELEPHONE SET REPEATER
10. SACDIN K RACK
11. SACDIN M RACK
12. KITCHEN SERVICES GROUP
13. RADIO SET GROUP
14. OPERATORS SEAT
16. POWER SUPPLY GROUP
17. ESCAPE HATCH
18. BED
19. FILE CABINET
20. SHOCK ISOLATOR AIR CYLINDERS
21. DIGITAL DATA GROUP
22. CONSOLE
23. SACCS U RACK
24. EHF AND VLF/LF HAC SYSTEMS EQUIPMENT RACK
25. AFSATCOM GROUP
26. LIGHT SWITCH
27. TOILET AND WASHBASIN

Diagram 2 Center Bay Console **DoD UNCI**

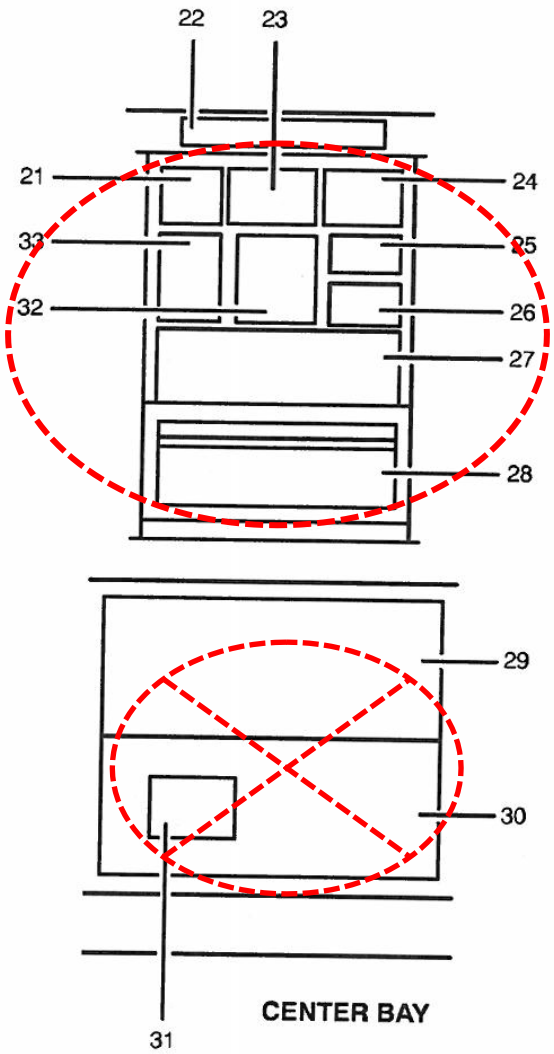

LEGEND

21. FUTURE GROWTH
22. TIME-OF-DAY CLOCK (SEE FIGURE 5-10)
23. VLF RADIO CONTROL ASSEMBLY
24. FUTURE GROWTH
25. FUTURE GROWTH
26. FUTURE GROWTH
27. AUXILIARY ALARM PANEL (SEE FIGURE 5-16)
28. PRINTER (SEE FIGURE 5-17)
29. WEAPON SYSTEM PROCESSOR
30. RAPID MESSAGE PROCESSOR
31. JOURNAL MEMORY LOADER
32. UHF CONTROL PANEL
33. AFSATCOM CONTROL INDICATOR

Diagram 3 Left Bay **DoD UNCI**

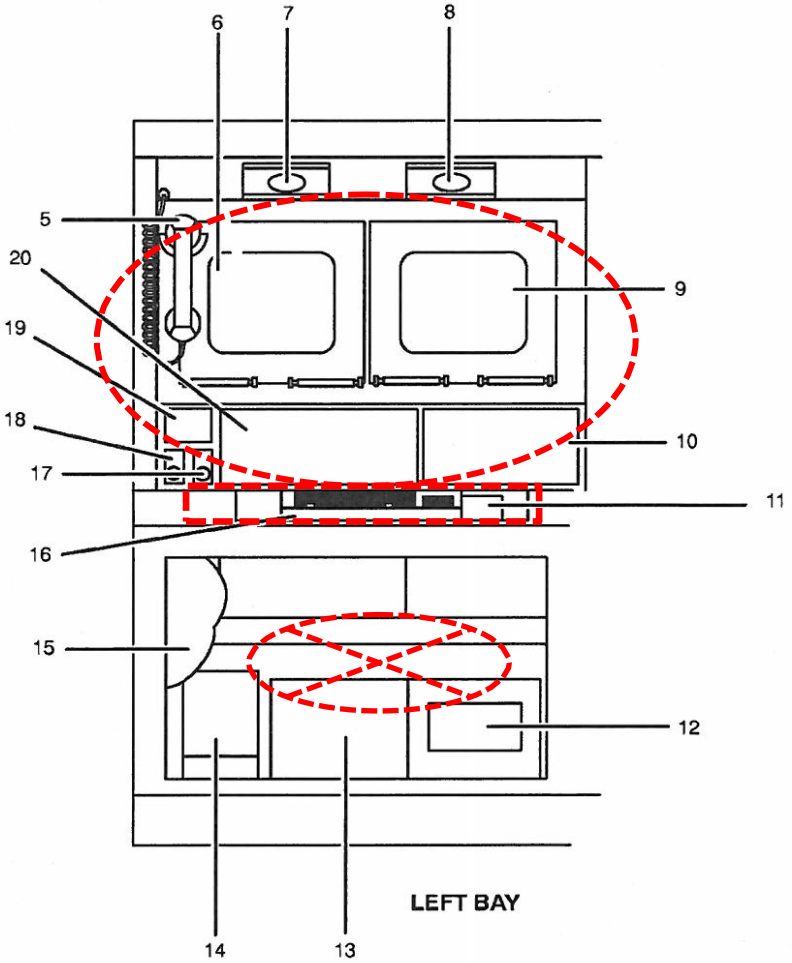

LEGEND

5. TELEPHONE
6. HA VISUAL DISPLAY UNIT (SEE FIGURE 5-9)
7. PAS NAFH SPEAKER (INOPERATIVE)
8. VCP SPEAKER
9. WS VISUAL DISPLAY UNIT (SEE FIGURE 5-9)
10. LAUNCH CONTROL PANEL (SEE FIGURE 5-19)
11. TRACKBALL ASSEMBLY (SEE FIGURE 5-13)
12. RMP BACKUP
13. FUTURE GROWTH
14. BULK STORAGE/LOADER (SEE FIGURE 5-18)
15. DOOR
16. KEYBOARD (SEE FIGURE 5-13)
17. MASTER ALARM RESET
18. HEADSET JACK
19. COOPERATIVE LAUNCH SWITCH (SEE FIGURE 5-12)
20. VOICE CONTROL PANEL

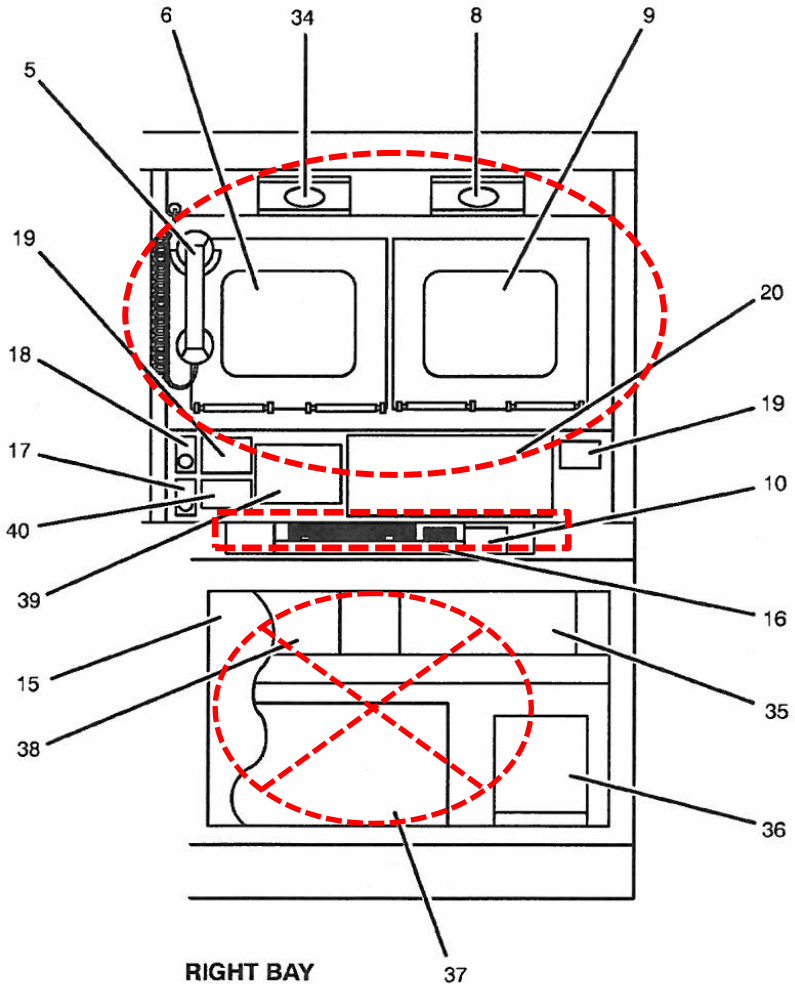

LEGEND

34. PAS SAC SPEAKER (INOPERATIVE)
35. FLOPPY DISK DRIVE (SEE FIGURE 5-14)
36. CODER-DECODER ASSEMBLY (SEE FIGURE 5-15)
37. POWER CONTROL AND DISTRIBUTION UNIT
38. DIAGNOSTIC PORT
39. LAUNCH ENABLE PANEL (SEE FIGURE 5-11)
40. SECURE VOICE PANEL

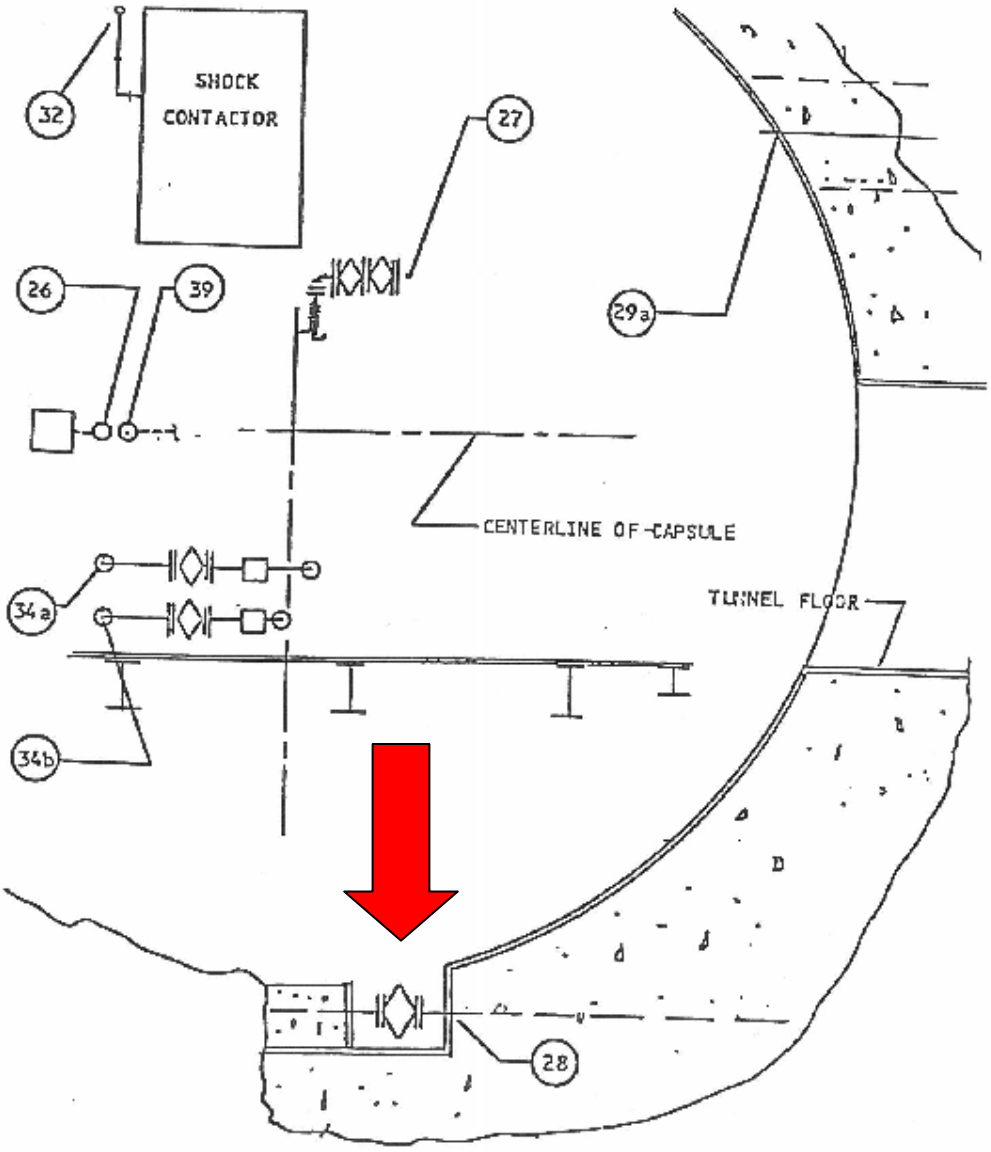

FIGURE 4 CAPSULE PENETRATION LOCATIONS

(SHEET 3 of 5)

CAGE 81205 SIZE A Dwg. No. 21-82367 SH 48 REV B
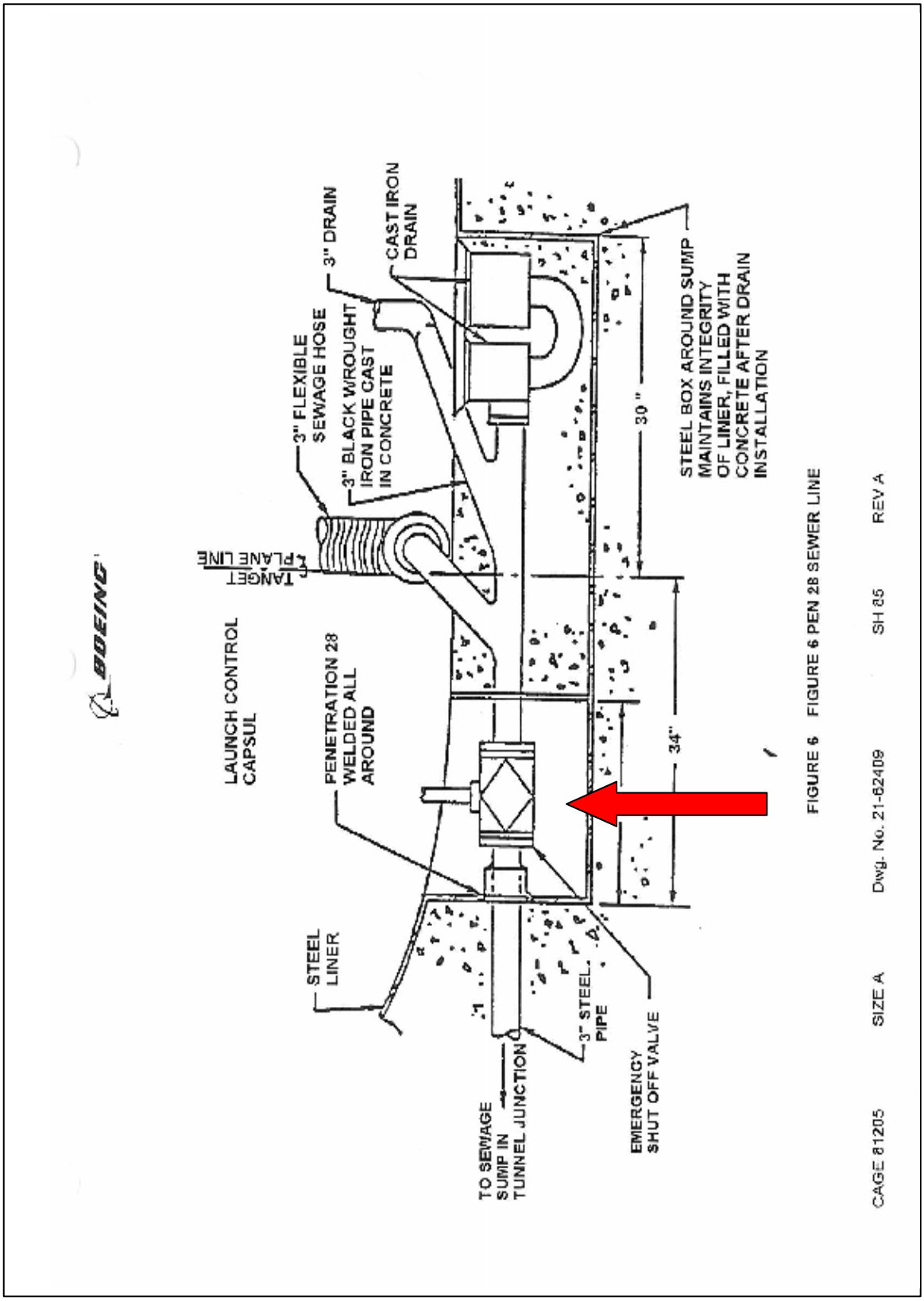
Diagram 6 – ESOV/Catchment basin Location (Indicated by Arrow) DoD UNCI