RECLAMATION

Managing Water in the West

Solicitation No.140R2026Q0079

Lake Berryessa East Side Road Fence Repairs

Lake Berryessa Field Office - California

TABLE OF CONTENTS

SECTION A - Solicitation, Offer and Award Form (SF 1442)

SECTION B - Pricing Schedule

SECTION C - Specifications/Appendices

SECTION D - Packaging and Marking

SECTION E - Inspection and Acceptance

SECTION F - Deliveries or Performance

SECTION G - Contract Administration Data

SECTION H - Special Contract Requirements

SECTION I - Contract Clauses

SECTION J - List of Documents, Exhibits, and Other Attachments

SECTION K - Representations, Certifications and Other Statements of Offerors

SECTION L - Instructions, Conditions and Notices to Offerors

SECTION M - Evaluation Factors for Award

SOLICITATION, OFFER, AND AWARD (Construction, Alteration, or Repair)	1. SOLICITATION NO.	2. TYPE OF SOLICITATION	3. DATE ISSUED	PAGE	OF	PAGES
	140R2026Q0079	☐ SEALED BID (IFB) INVITATION FOR BID ☐ NEGOTIATED (RFP) REQUEST FOR PROPOSAL	06/02/2026	1		3

IMPORTANT - The "offer" section on the reverse must be fully completed by offeror.

4. CONTRACT NO.	5. REQUISITION/PURCHASE REQUEST NO.	6. PROJECT NO.

7. ISSUED BY CODE R20	8. ADDRESS OFFER TO
Bureau of Reclamation Mid-Pacific Region Regional Office Division of Acquisition Services 2800 Cottage Way, Room E-1815 Sacramento CA 95825-1898	Bureau of Reclamation California Great Basin Regional Office 2800 Cottage Way, Rm E-1815, Federal Building Sacramento, CA 95825

9. FOR INFORMATION CALL	a. NAME	b. TELEPHONE NO. *(Include area code) (NO COLLECT CALLS)*
	Rosana Yousefgoarji	9169785004

SOLICITATION

NOTE: In sealed bid solicitations "offer" and "offeror" mean "bid and "bidder".

10. THE GOVERNMENT REQUIRES PERFORMANCE OF THE WORK DESCRIBED IN THESE DOCUMENTS *(Title, identifying number, date)*

A. Lake Berryessa East Side Road Fence Repairs

B. Work Site Location: The work is located at Lake Berryessa Field Office, Napa, California.

C. Site Visit Information: Site visit information is in Section H of the solicitation.

D. Estimated Price Range: $100,000.00 to $250,000.00.

E. Set-aside Information: This requirement is being procured under the Simplified Acquisition Procedures, Federal Acquisition Regulation (FAR) Part 13. NAICS Code: 238990 and applicable size standard $19 million.

This requirement is restricted to Total Small Business concerns. FAR Clause 52.219-6 "Notice of Total Small Business Set-Aside" applies to this requirement.

11. The contractor shall begin performance within 7 calendar days and complete it within 90 calendar days after receiving ☐ award, ☒ notice to proceed. This performance period is ☒ mandatory ☐ negotiable. ***(See*** Section H ***).***

12a. THE CONTRACTOR MUST FURNISH ANY REQUIRED PERFORMANCE AND PAYMENT BONDS? *(If "YES", indicate within how many calendar days after award in Item 12b.)*	12b. CALENDAR DAYS
☒ YES ☐ NO	10

13. ADDITIONAL SOLICITATION REQUIREMENTS:

a. Sealed offers in original and 1 copies to perform the work required are due at the place specified in Item 8 by 1200 ***(hour)*** local time 07/02/2026 (date). If this is a sealed bid solicitation, offers will be publicly opened at that time. Sealed envelopes containing offers shall be marked to show the offeror's name and address, the solicitation number, and the date and time offers are due.

b. An offer guarantee ☐ is, ☒ is not required.

c. All offers are subject to the (1) work requirements, and (2) other provisions and clauses incorporated in the solicitation in full text or by reference.

d. Offers providing less than 90 calendar days for Government acceptance after the date offers are due will not be considered and will be rejected.

OFFER *(Must be fully completed by offeror)*

14. NAME AND ADDRESS OF OFFEROR *(Include ZIP Code)*	15. TELEPHONE NO. *(Include area code)*
	16. REMITTANCE ADDRESS *(Include only if different than Item 14.)*
CODE FACILITY CODE	

17. The offeror agrees to perform the work required at the prices specified below in strict accordance with the terms of this solicitation, if this offer is accepted by the Government in writing within _____ calendar days after the date offers are due. *(Insert any number equal to or greater than the minimum requirement stated in Item 13d. Failure to insert any number means the offeror accepts the minimum in Item 13d.)*

AMOUNTS ▶

18. The offeror agrees to furnish any required performance and payment bonds.

19. ACKNOWLEDGMENT OF AMENDMENTS

(The offeror acknowledges receipt of amendments to the solicitation -- give number and date of each)

AMENDMENT NUMBER										
DATE.										

20a. NAME AND TITLE OF PERSON AUTHORIZED TO SIGN OFFER *(Type or print)*	20b. SIGNATURE	20c. OFFER DATE

AWARD *(To be completed by Government)*

21. ITEMS ACCEPTED:

Continued...

22. AMOUNT	23. ACCOUNTING AND APPROPRIATION DATA

24. SUBMIT INVOICES TO ADDRESS SHOWN IN *(4 copies unless otherwise specified)* ▶	ITEM	25. OTHER THAN FULL AND OPEN COMPETITION PURSUANT TO THE UNITED STATES CODE AT ☐ 10 U.S.C. 3204(a) ( ) ☐ 41 U.S.C. 3304(a) ( )
26. ADMINISTERED BY R20 Bureau of Reclamation Mid-Pacific Region Regional Office Division of Acquisition Services 2800 Cottage Way, Room E-1815 Sacramento CA 95825-1898		27. PAYMENT WILL BE MADE BY

CONTRACTING OFFICER WILL COMPLETE ITEM 28 OR 29 AS APPLICABLE

☐ 28. NEGOTIATED AGREEMENT *(Contractor is required to sign this document and return* 1 *copies to issuing office.)* Contractor agrees to furnish and deliver all items or perform all work requirements identified on this form and any continuation sheets for the consideration stated in this contract. The rights and obligations of the parties to this contract shall be governed by (a) this contract award, (b) the solicitation, and (c) the clauses, representations, certifications, and specifications incorporated by reference in or attached to this contract.

☐ 29. AWARD *(Contractor is not required to sign this document.)* Your offer on this solicitation is hereby accepted as to the items listed. This award consummates the contract, which consists of (a) the Government solicitation and your offer, and (b) this contract award. No further contractual document is necessary.

30a. NAME AND TITLE OF CONTRACTOR OR PERSON AUTHORIZED TO SIGN *(Type or print)*		31a. NAME OF CONTRACTING OFFICER *(Type or print)* Rosana Yousefgoarji	
30b. SIGNATURE	30c. DATE	31b. UNITED STATES OF AMERICA BY	31c. DATE

NAME OF OFFEROR OR CONTRACTOR

ITEM NO. (A)	SUPPLIES/SERVICES (B)	QUANTITY (C)	UNIT (D)	UNIT PRICE (E)	AMOUNT (F)
00010	Lake Berryessa East Side Road Fence Repairs (Price Schedule CLINS 1 through 3) See Following Continuation Page Product/Service Code: 5660 Product/Service Description: FENCING, FENCES, GATES AND COMPONENTS	1	AU		

CONTINUATION OF

SECTION B – SUPPLIES OR SERVICES AND PRICES

Lake Berryessa East Side Road Fence Repairs

Lake Berryessa Field Office - California

B.1 GENERAL

The contractor shall, except as otherwise noted, provide all necessary labor, equipment, materials, supplies, transportation, travel, and per diem necessary to perform the work specified in the attached Statement of Work.

B.2 PRICE SCHEDULE

(a) Offers will be considered for award on the following Price Schedule, but no offer will be considered for award on only a part of the Price Schedule.

(b) Offers are subject to the terms and conditions of this solicitation.

(c) Quantities in the Price Schedule are estimated quantities for comparison of offers only.

(d) Definitions:

(1) CLIN – Contract Line Item Number

PRICE SCHEDULE

CLIN	Section	Supplies or Services	Quantity and Unit	Unit Price	Amount
1	C - SOW	Fence Repair – Multi Strand Wire- Including Mobilization	36,960 Feet	$	$
2	C - SOW	Access Control	14 Gates/Chicanes	$	$
3	C - SOW	Boundary Marking	36,960 Feet	$	$

TOTAL FOR SCHEDULE $_____

END OF SECTION

This page intentionally left blank.

SECTION C - DESCRIPTIONS AND SPECIFICATIONS

See the attached Statement of Work

Statement of Work
Lake Berryessa East Side Road Fence Repairs

1.0 Introduction

The Lake Berryessa Field Office has successfully applied for BIL-BAR 5-10 year Post Fire Recovery Funding in FY 25 and would like to use this funding to complete repairs of fence lines damaged in the 2020 fires. The fencing will aid in the definition of grazing plots and the recovery of riparian areas by implementing recommendations from a July 2008 Lake Berryessa East Side Grazing Management Plan.

2.0 Background

The Bureau of Reclamation created the reservoir of Lake Berryessa in the 1950's as part of the Solano Project, authorized by the Reclamation Project Act of 1939 (53 Stat. 1187). Solano Irrigation District operates the Solano Project under an agreement with Reclamation, although the reservoir and surrounding land are federal lands managed by Reclamation. At capacity, Lake Berryessa stores 1.6 million acre-feet (af) of water and is one of the largest bodies of fresh water in California. The lake is 23 miles long by 3 miles wide and has 165 miles of shoreline.

In August of 2020, a series of spot fires ignited and converged to form the LNU Lightning Complex Fire which burned the northern-most, 400 acres of the former Lake Berryessa Wildlife Area as well as 60% of the Solano Project Lands around Lake Berryessa. The recovery resulted in several time-consuming employee and public safety projects. This workload, when combined with a sharp decline in field office staff post-pandemic and post-fire, meant that a project to address the rise in invasive plants, including black mustard, along the eastern shore of Lake Berryessa could not be addressed until now.

3.0 Scope

Contractor will maintain 13 vehicular access points by re-hanging gates and re-stringing wire where needed. They will repair one pedestrian chicane. They will also replace failing or burned posts, corners (40) and braces (20) with fire-resistant materials. Contractor will correct gaps in approximately 20 existing stream-crossings.

The contractor will repair and replace all remaining wood posts in seven miles of 5-strand barbed wire fence forming the northeastern boundary of the management parcels.

The contractor will install signage every quarter mile noting the U.S. Government property line. Every gate will feature a sign reminding guests of prohibited activities.

All work and materials will be covered by a 1 year warranty.

4.0 Applicable Documents

- Paddock Map
- 382A – Fence (standard wire), Conservation Practice Joh Sheet, NRCS 382ajs.doc (live.com)
- Accessible Gates Chicanes, USFS, G:\REV-STD-Standard Trail Plan Drawings\pdfsetup\STD_942-50-01_Accessible_Chicanes Model (1) (usda.gov)

5.0 Tasks

5.1 Using NRCS standards, or better, Contractor shall maintain existing 5-strand, barbed-wire fencing with fire resistant materials. NRCS standards include:

Steel Posts: Steele line posts shall be the “T”, “U”, or “Y” type with a welded or riveted anchor plate near the bottom (minimum 18 inches square area) and have suitable corrugations, knobs, studs or grooves for fastening the wire. Line posts shall weigh at least 1.33 pounds per linear foot of length and shall be a minimum of 5.5 feet long.

Steel Pipe Posts: Steel pipe corner, gate, or brace posts shall be a minimum diameter of 2 inches, Schedule 40 (3.375-inch O.D.) and at least 7 feet long. Bracing shall be a minimum of 1-1/2 inch nominal diameter, Schedule 40 pipe. Brace fittings and clamps shall be galvanized.

Barbed Wire: Barbed wire shall be a single steel wire of 9-guage or heavier, two wrapped strands of 12.5-guage or heavier wire or 12.5-guage or heavier hi-tensile wire. Wire shall have a minimum tensile strength of 45,000 psi.

Stays: Wire stays shall be 9.5-guage or heavier, zinc coated, twisted wire. The length shall be at least two inches longer than the distance between the top and the bottom strands of the fence.

Post Depth: Line steel posts shall be set a minimum depth of 1.5 feet. Gate, corner, and brace posts shall be set to a minimum depth of 3 feet, unless otherwise specified. Steel pipe and angle section posts shall be embedded in a 12-inch circular or square concrete pier, except when set in firm rock.

Post Spacing: The maximum post spacing interval shall be 20 feet.

Line Bracing: Line brace assemblies shall be located at all corners, gates, and abrupt changes in vertical topography (generally considered 15 degrees). On straight reaches of fencing line braces shall be installed at a spacing of no more than 1300 feet.

Wire Spacing: When measured from the groundline, a 5-strand fence will locate wires at 5 inches, 12 inches, 20 inches, 30 inches, and between 42-45 inches.

Wire Fasteners: Fasteners on steel posts shall be snug enough to prevent vertical movement of the wire on the post.

Drainageways: In crossing drainageways or depressions, a weight or deadman anchor shall be fastened to the fence to maintain the required spacing interval or additional wires shall be added to maintain the required minimum wire height from the ground.

c) 5-Barbed Wire or Smooth Wire Fence Details

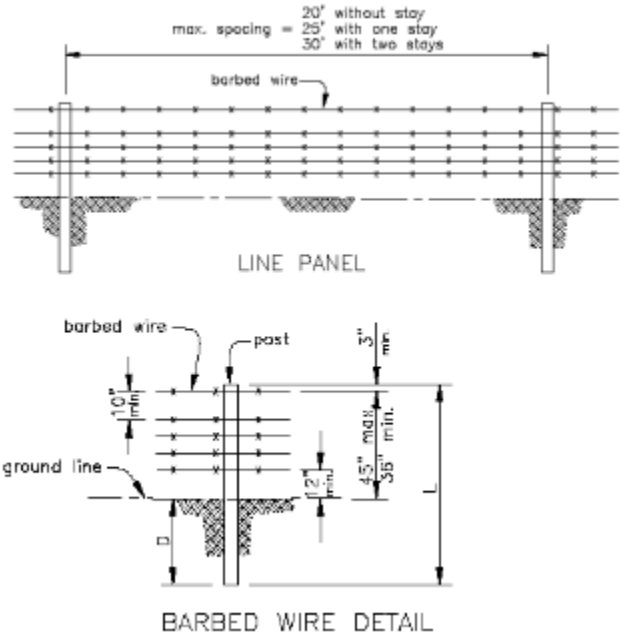

BARBED WIRE DETAIL

5.2 Using the same NRCS standards above, the contractor will operate 3,400 feet of Let-Down Fence below the reservoir's 440' above sea level. Contractor will lower fencing in high water years to reduce the risk of it entangling boaters and anglers.

Contractor will ensure the fencing is taken down in the late fall or winter before the reservoir reaches 440 feet above sea level. Contractor will restore fencing in the late spring or summer when water levels recede. Contractor will set the schedule in coordination with the project's COR.

d) Let-Down Fence Details

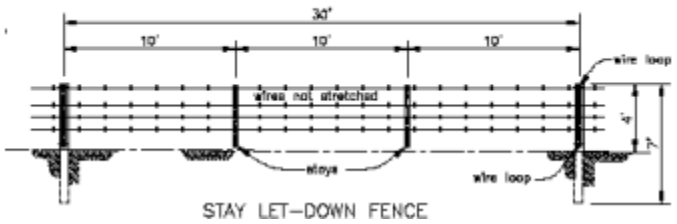

STAY LET–DOWN FENCE

5.3 As wood corner, gate, or brace pipes burn or rot in the existing fence line, contractor shall replace with steel pipes meeting the NRCS standards specified above.

5.4 Contractor shall repair 13 vehicular access gates so that all gates swing freely and there are no gaps in in the adjacent fencing.

5.5 Contractor shall repair a pedestrian access point with an accessible "U" chicanes using non-combustible materials adjacent to gate E1.

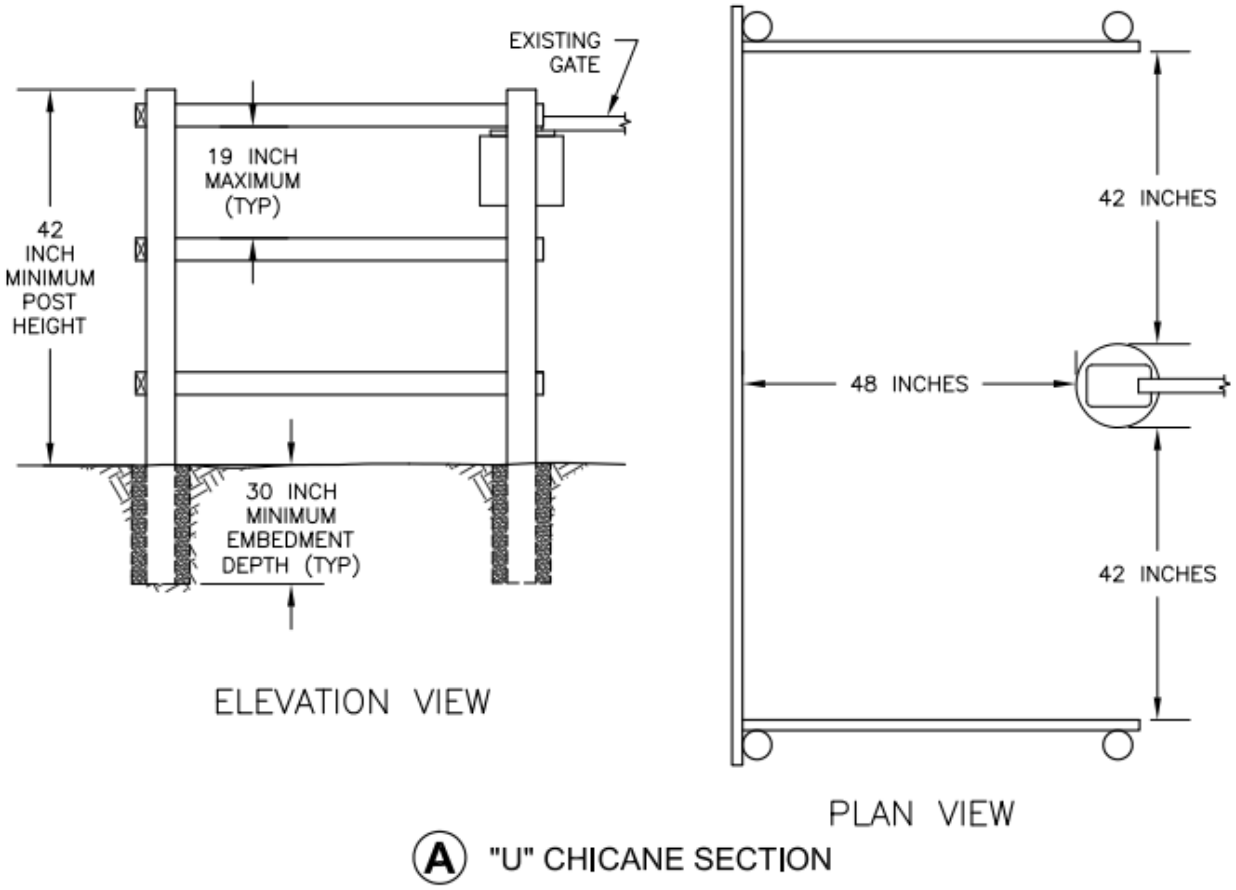

6.0 Environmental Protection Requirements

This contract will need to enact conservation measures to protect the California red-legged frog (FRLF). Temporary ground disturbance could crush or injure individuals if CRLF occupies upland refugia or moist areas along fencelines. Increased worker presence and equipment movement could temporarily displace frogs from movement corridors. Installing or repairing fence lines presents potential for direct effects to CRLF may include injury or death by being struck by equipment or entombed in burrows from soil disturbance. Most fenceline work would occur in upland areas less frequently used by CRLF except during wet season dispersal. Project implementation would occur during dry season conditions to reduce the likelihood that CRLF will be present in the Project area.

6.1 Worker Environmental Awareness Training (WEAT)
Worker Environmental Awareness Training: Prior to the commencement of Project work, all Project personnel will attend an environmental awareness training. It will include; species descriptions and habitat needs, species status and protection under the Endangered Species Act, definition of take, reporting requirements, conservation measures to reduce project impacts, and instructions for encountering California Red-legged Frog (CRLF) and Keck's checker-mallow in areas where take could occur.

Employees will sign a form stating that they received and understand the training. Reclamation will maintain a list of personnel receiving the training.

6.2 Pre-Construction Biological Surveys
Prior to any ground disturbing activities, pre-construction biological surveys will be conducted in the action area for CRLF and Keck's checker-mallow. Surveys will be conducted by a qualified biologist within 14 days prior to commencement of the work.

6.3 Wildlife Protection During Work
To reduce the potential for Project vehicles striking CRLF, a 10-mile-per-hour speed limit will be enforced at the site.
No work will occur during or 24-hours following a rain event. A rain event is to be considered precipitation of ¼-inch or more within a 24-hour period.
All Project personnel will be informed of the Action Area boundaries for Project activities. If necessary, flagging and/or staking may be used to define the Project area limits.

6.4 Vehicle and Equipment Decontamination
To prevent spread of invasive species, disease, or contaminants:

All equipment and vehicles shall be fully decontaminated prior to arriving on site. Decontamination steps must be approved by Reclamation personnel.

7.0 Government Furnished Equipment

The Government will supply a copy of a padlock key so that the contractor may access the paddocks along East Side Road and Eticuera Day Use Area during the duration of the contract.

The Contractor will purchase the supplies needed to complete the work.

Contractor will supply all tools and transportation needed to complete the work.

8.0 Period of Performance

Period of Performance is 90 days from issuance of notice to proceed. All work is to be performed during the work week Monday through Friday exclusive of holidays.

9.0 Place of Performance

Contract is scheduled to occur at:

Lake Berryessa Field Office
5520 Berryessa Knoxville Road
Napa, CA 94558

The contractor may stage equipment and supplies on the hardened surfaces of:

Eticuera Day Use Area
8600 Berryessa Knoxville Road
Napa, CA 94558

The work will take place along six miles of East Side Road from its intersection with Berryessa Knoxville Road just north of Eticuera Day Use Area extending south to the southern extent of the 2020 LNU Lightning Complex Fire Burn Scar (38.632185835028, -122.23397247869522).

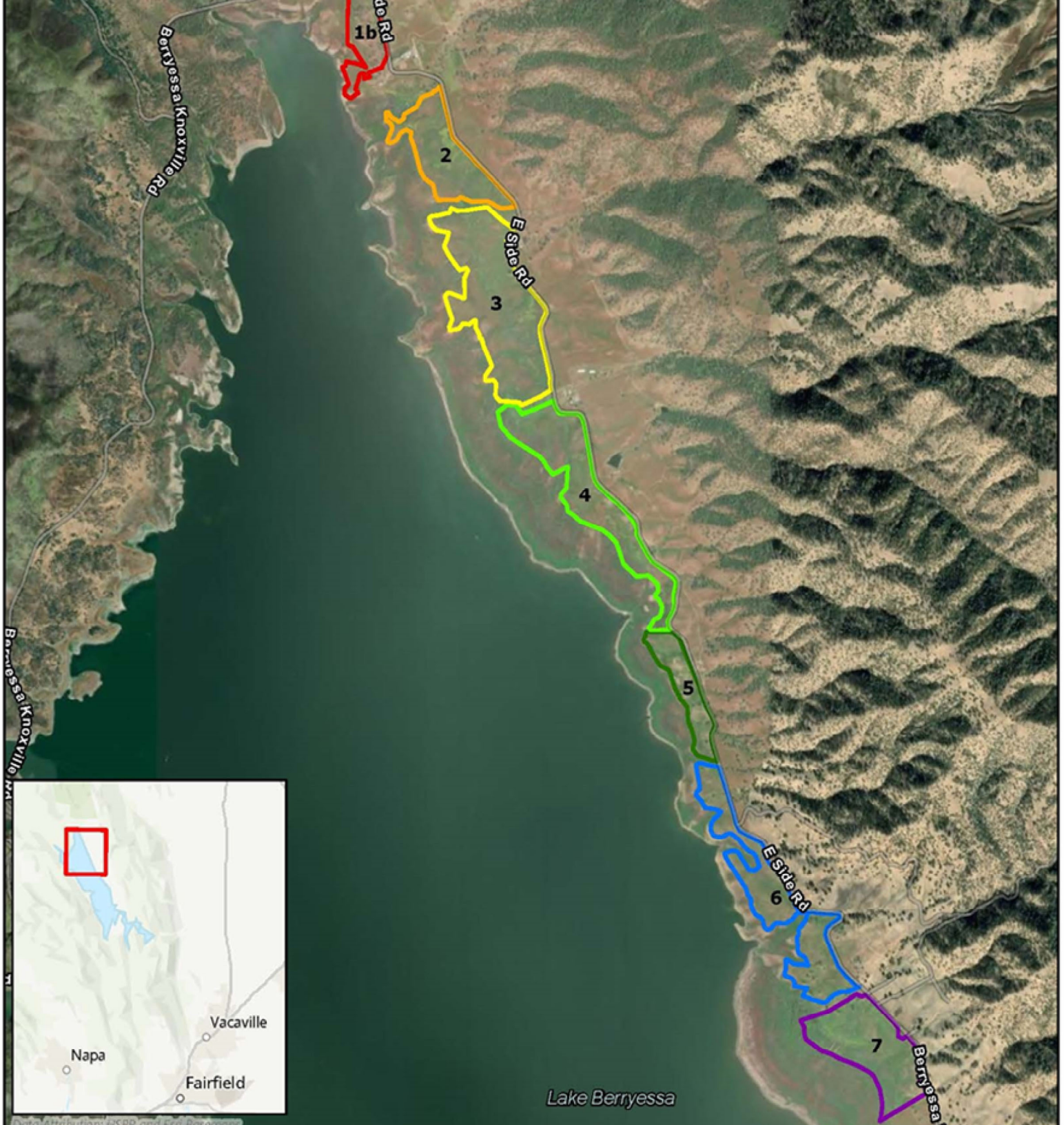
1b
2
3
4
5
6
7
E Side Rd
Berryessa Knoxville Rd
Lake Berryessa
Vacaville
Napa
Fairfield

SECTION D - PACKAGING AND MARKING

There are no clauses in this section.

SECTION E - INSPECTION AND ACCEPTANCE

Clause	Title	Date
52.246-12	Inspection of Construction	AUG 1996

SECTION F - DELIVERIES OR PERFORMANCE

Clause	Title	Date
52.242-14	Suspension of Work	APR 1984

SECTION G - CONTRACT ADMINISTRATION DATA

G.1 This contract shall be administered by the California Great Basin Regional Office, 2800 Cottage Way, Sacramento, California 95825-1898.

G.2 DIAR 1452.201-70 AUTHORITIES AND DELEGATIONS SEP 2011

(a) The Contracting Officer is the only individual authorized to enter into or terminate this contract, modify any term or condition of this contract, waive any requirement of this contract, or accept nonconforming work.
(b) The Contracting Officer will designate a Contracting Officer's Representative (COR) at time of award. The COR will be responsible for technical monitoring of the contractor's performance and deliveries. The COR will be appointed in writing, and a copy of the appointment will be furnished to the Contractor. Changes to this delegation will be made by written changes to the existing appointment or by issuance of a new appointment.

The COR will be named at time of award.

(c) The COR is not authorized to perform, formally or informally, any of the following actions:
(1) Promise, award, agree to award, or execute any contract, contract modification, or notice of intent that changes or may change this contract;
(2) Waive or agree to modification of the delivery schedule;
(3) Make any final decision on any contract matter subject to the Disputes Clause;
(4) Terminate, for any reason, the Contractor's right to proceed;
(5) Obligate in any way, the payment of money by the Government.
(d) The Contractor shall comply with the written or oral direction of the Contracting Officer or authorized representative(s) acting within the scope and authority of the appointment memorandum. The Contractor need not proceed with direction that it considers to have been issued without proper authority. The Contractor shall notify the Contracting Officer in writing, with as much detail as possible, when the COR has taken an action or has issued direction (written or oral) that the Contractor considers to exceed the COR's appointment, within 3 days of the occurrence. Unless otherwise provided in this contract, the Contractor assumes all costs, risks, liabilities, and consequences of performing any work it is directed to perform that falls within any of the categories defined in paragraph (c) prior to receipt of the Contracting Officer's response issued under paragraph (e) of this clause.
(e) The Contracting Officer shall respond in writing within 30 days to any notice made under paragraph (d) of this clause. A failure of the parties to agree upon the nature of a direction, or upon the contract action to be taken with respect thereto, shall be subject to the provisions of the Disputes clause of this contract.
(f) The Contractor shall provide copies of all correspondence to the Contracting Officer and the COR.
(g) Any action(s) taken by the Contractor, in response to any direction given by any person acting on behalf of the Government or any Government official other than the Contracting Officer or the COR acting within his or her appointment, shall be at the Contractor's risk.

G. 3 WBR 1452.201-80 CONTRACTING OFFICER'S REPRESENTATIVE'S AUTHORITIES AND LIMITATIONS -- BUREAU OF RECLAMATION MAY 2018

a) Performance of the work under this contract shall be subject to the technical direction of the Reclamation Contracting Officer's Representative (COR). The term "technical direction" is defined to include, without limitation:

(1) Inspecting and accepting or rejecting work performed under the contract.

(2) Representing the Government in technical phases of the work. The COR is responsible for the technical administration of the contract and will provide instructions and interpretations to the Contractor on all technical matters relating to the contract. The COR will supervise or oversee all Government technical and administrative personnel assigned to assist the COR.

(3) Reviewing and, where required by the contract, approving submittals of technical data, shop drawings, samples, literature, plans, or other data required to be delivered by the Contractor to the Government.

(b) The Contractor will receive a copy of the written COR designation from the Contracting Officer. It will specify the extent of the COR's authority to act on behalf of the Contracting Officer.

(c) Technical direction must be within the scope of work stated in the contract. Only the Contracting Officer is authorized to determine if a change is within the scope of the contract; therefore, the COR does not have the authority to, and may not, issue any technical direction that -

(1) Constitutes a direction of additional work outside the Contract requirements;

(2) Constitutes a change as defined in the contract clause entitled "Changes;"

(3) In any manner causes an increase or decrease in the total contract cost, or the time required for contract performance;

(4) Changes any of the expressed terms, conditions or specifications of the contract; or

(5) Interferes with the Contractor's right to perform the terms and conditions of the contract.

(d) All technical direction shall be issued in writing by the COR.

(e) The Contractor must proceed promptly with the performance of technical direction duly issued by the COR in the manner prescribed by this clause and within its authority under the provisions of this clause. If, in the opinion of the Contractor, any instruction or

direction by the COR falls within one of the categories defined in (c)(1) through (c)(5) of this clause, the Contractor must not proceed and must notify the Contracting Officer in writing within five (5) working days after receipt of any such instruction or direction and must request the Contracting Officer to modify the contract accordingly. Upon receiving the notification from the Contractor, the Contracting Officer must -

(1) Advise the Contractor in writing after receipt of the Contractor's letter that the technical direction is within the scope of the contract effort and does not constitute a change under the Changes clause of the contract; or

(2) Advise the Contractor that the Government will issue a written change order.

(f) A failure of the Contractor and Contracting Officer either to agree that the technical direction is within the scope of the contract or to agree upon the contract action to be taken with respect to the technical direction will be subject to the provisions of the clause entitled "Disputes."

(End of clause)

G.4 DOI-AAAP 0028 ELECTRONIC INVOICING AND PAYMENT REQUIREMENTS – INVOICE PROCESSING PLATFORM (IPP) FEB 2021

Payment requests must be submitted electronically through the U. S. Department of the Treasury's Invoice Processing Platform System (IPP).

"Payment request" means any request for contract financing payment or invoice payment by the Contractor. To constitute a proper invoice, the payment request must comply with the requirements identified in the applicable Prompt Payment clause included in the contract, or the clause 52.212-4 Contract Terms and Conditions - Commercial Items included in commercial item contracts. The IPP website address is: https://www.ipp.gov.

Under this contract, the following documents are required to be submitted as an attachment to the IPP invoice:

Concurrent to submitting an invoice in IPP, the contractor shall submit supporting documentation to the contracting officer at sha-mpr-acqconbrinv@usbr.gov. Contractors are cautioned that supporting documentation e-mailed to the contracting officer must not conflict with the IPP submission. Conflicts between the IPP submission and supporting documentation may result in a delay in approval and/or rejection of submitted invoices.

When e-mailing supporting documentation to the contracting officer, the subject line of the email shall be formatted as follows: Contract Number, Invoice Number, Contracting Officer's last name (e.g., 140R2018R00000_Invoice No. 1_Smith). The invoice shall be attached to the email and named using the following format: Contract Number, Contractor Name, Invoice Number, Invoice Amount (e.g., 140R2022R00000_World Test, Inc. - Inv. No.

1 - $5,678).

Invoices shall not include information that would compromise Personally Identifiable Information, such as full social security numbers, dates of birth, etc. The final invoice shall be submitted and will be approved in accordance with payment terms and conditions contained in the contract, after all, if any, settlement actions are complete. The contractor must clearly identify the last payment as the 'Final Invoice'.

Support documents must include, but are not limited to, the following documents:

Construction Invoice
Monthly Certificate of Labor Conformance
Subcontractor / Supplier Payment Summary

The Contractor must use the IPP website to register access and use IPP for submitting requests for payment. The Contractor Government Business Point of Contact (as listed in SAM) will receive enrollment instructions via email from the Federal Reserve Bank of St. Louis (FRBSTL) within 3 - 5 business days of the contract award date. Contractor assistance with enrollment can be obtained by contacting the IPP Production Helpdesk via email IPPCustomerSupport@fiscal.treasury.gov or phone (866) 973-3131.

If the Contractor is unable to comply with the requirement to use IPP for submitting invoices for payment, the Contractor must submit a waiver request in writing to the Contracting Officer with its proposal or quotation.

(End of Local Clause)

SECTION H – SPECIAL CONTRACT REQUIREMENTS

H.1 WBR 1452.242-80 POSTAWARD CONFERENCE— BUREAU OF RECLAMATION MAR 2022

(a) Prior to the contractor starting work, a post-award conference (as described in FAR Subpart 42.5), will be convened by the contracting activity or contract administration office. The contractor's project manager shall attend the conference. If the contract involves subcontractors, a representative of each major subcontractor is also required to attend.

(b) The conference will be held at the **via MS Teams invite.**

(c) The contracting officer and the contractor will agree to the date and time of the conference after award of the contract. In event of a conflict in schedules, the contracting officer shall establish the date for the conference.

(d) The contractor shall not be entitled to the reimbursement any costs associated with attendance at the conference beyond the agreed-to contract price.

(End of clause)

H.2 COMMENCEMENT, PROSECUTION, AND COMPLETION OF WORK

The Contractor shall be required to
(a) commence work under this contract within **7** calendar days after the date the Contractor receives the notice to proceed,
(b) prosecute the work diligently, and
(c) complete the entire work ready for use not later than **90 days** after the date the Contractor receives the notice to proceed. The time stated for completion shall include final cleanup of the premises.

H.3 SITE VISIT (CONSTRUCTION)

(a) Offerors are urged and expected to inspect the site where the work will be performed.

(b) Site visit is scheduled on June 11, 2026, Thursday at 10:00 AM PST.

In order to anticipate the number of interested attendees to attend a site visit, Contractors shall register by contacting **Kristine Edwards**, via email at kedwards@usbr.gov . (for urgent matters on the site visit day, please contact **Kristine Edwards** at (707) 905-7896. Please also cc: the Contracting Specialist, Rosana Yousef Goarji rosana_yousefgoarji@ios.doi.gov.
The registration email must include the following information:

- Name of Company
- Number of Participants

- Names of Participants
- Main point of contact

Offerors attending the site visit shall wear a hard hat, safety toe boots (no open toe shoes), sturdy attire, safety glasses, and hearing protection.

H.4 Variation in Estimated Quantity

If the quantity of a unit-priced item in this contract is an estimated quantity and the actual quantity of the unit-priced item varies more than 15 percent above or below the estimated quantity, an equitable adjustment in the contract price shall be made upon demand of either party. The equitable adjustment shall be based upon any increase or decrease in costs due solely to the variation above 115 percent or below 85 percent of the estimated quantity. If the quantity variation is such as to cause an increase in the time necessary for completion, the Contractor may request, in writing, an extension of time, to be received by the Contracting Officer within 10 days from the beginning of the delay, or within such further period as may be granted by the Contracting Officer before the date of final settlement of the contract. Upon the receipt of a written request for an extension, the Contracting Officer shall ascertain the facts and make an adjustment for extending the completion date as, in the judgement of the Contracting Officer, is justified.

SECTION I - CONTRACT CLAUSES

FAR 52.252-2 CLAUSES INCORPORATED BY REFERENCE FEB 1998

This contract incorporates one or more clauses by reference, with the same force and effect as if they were given in full text. Upon request, the Contracting Officer will make their full text available. Also, the full text of a clause may be accessed electronically at this/these address(es):

https://www.acquisition.gov/browse/index/far (FAR 52.XXX-XX formatted clauses)

FAR Clauses	Title	Date
52.203-17	Contractor Employee Whistleblower Rights	NOV 2023
52.203-19	Prohibition on Requiring Certain Internal Confidentiality Agreements or Statements	JAN 2017
52.204-9	Personal Identity Verification of Contractor Personnel	JAN 2011
52.204-10	Reporting Executive Compensation and First-Tier Subcontract Awards (RFO DEVIATION)	MAR 2026
52.204-13	System for Award Management Maintenance (RFO DEVIATION)	MAR 2026
52.204-19	Incorporation by Reference of Representations and Certifications	DEC 2014
52.209-6	Protecting the Government's Interest When Subcontracting with Contractors Debarred, Suspended, Proposed for Debarment, or Voluntarily Excluded (RFO DEVIATION)	MAY 2026
52.209-10	Prohibition on Contracting with Inverted Domestic Corporations (RFO DEVIATION)	MAY 2026
52.213-4	Terms and Conditions—Simplified Acquisitions (Noncommercial) (RFO DEVIATION)	MAR 2026
52.215-8	Order of Precedence-Uniform Contract Format	OCT 1997
52.215-21	Requirements for Certified Cost or Pricing Data and Data Other Than Certified Cost or Pricing Data-Modifications	NOV 2021
52.219-6	Notice of Total Small Business Set-Aside (RFO DEVIATION)	JAN 2026
52.219-28	Post-Award Small Business Program Representation (RFO DEVIATION)	JAN 2026
52.222-3	Convict Labor (RFO DEVIATION)	MAY 2026
52.222-6	Construction Wage Rate Requirements (RFO DEVIATION)	MAY 2026
52.222-7	Withholding of Funds (RFO DEVIATION)	MAY 2026
52.222-8	Payrolls and Basic Records (RFO DEVIATION)	MAY 2026
52.222-9	Apprentices and Trainees (RFO DEVIATION)	MAY 2026

52.222-10	Compliance with Copeland Act Requirements (RFO DEVIATION)	MAY 2026
52.222-11	Subcontracts (Labor Standards) (RFO DEVIATION)	MAY 2026
52.222-12	Contract Termination – Debarment	MAY 2014
52.222-13	Compliance with Construction Wage Rate Requirements and Related Regulations	MAY 2014
52.222-14	Disputes Concerning Labor Standards (RFO DEVIATION)	MAY 2026
52.222-15	Certification of Eligibility	MAY 2014
52.222-36	Equal Opportunity for Workers with Disabilities (RFO DEVIATION)	MAY 2026
52.222-40	Notification of Employee Rights Under the National Labor Relations Act (RFO DEVIATION)	MAY 2026
52.222-50	Combating Trafficking in Persons (RFO DEVIATION)	MAY 2026
52.222-55	Minimum Wages for Contractor Workers Under Executive Order 14026 (RFO DEVIATION)	MAY 2026
52.222-62	Paid Sick Leave, Under Executive Order 13706 (RFO DEVIATION)	MAY 2026
52.223-3	Hazardous Material Identification and Material Safety Data (RFO DEVIATION)	MAY 2026
52.223-5	Pollution Prevention and Right-to-Know Information	MAY 2024
52.225-9	Buy American-Construction Materials	OCT 2022
52.225-13	Restrictions on Certain Foreign Purchases	FEB 2021
52.226-7	Drug-Free Workplace	MAY 2024
52.226-8	Encouraging Contractor Policies to Ban Text Messaging While Driving	MAY 2024
52.227-1	Authorization and Consent	JUN 2020
52.227-2	Notice And Assistance Regarding Patent And Copy Infringement	JUN 2020
52.227-4	Patent Indemnity – Construction Contracts	DEC 2007
52.228-2	Additional Bond Security	OCT 1997
52.228-11	Pledges of Assets	FEB 2021
52.228-12	Prospective Subcontractor Requests for Bonds	DEC 2022
52.228-13	Alternative Payment Protections	JULY 2000
52.228-14	Irrevocable Letter of Credit	NOV 2014
52.232-5	Payments under Fixed-Price Construction Contracts	MAY 2014
52.232-17	Interest	MAY 2014
52.232-18	Availability of Funds	APR 1984
52.232-23	Assignment Of Claims	MAY 2014

52.232-25	Prompt Payment	JAN 2017
52.232-27	Prompt Payment for Construction Contracts	JAN 2017
52.232-33	Payment by Electronic Funds Transfer – System for Award Management	OCT 2018
52.232-39	Unenforceability of Unauthorized Obligations	JUN 2013
52.232-40	Providing Accelerated Payment to Small Business Subcontractors	MAR 2023
52.233-1 Alt I	Disputes - Alternate I (DEC 1991)	MAY 2014
52.233-3	Protest After Award	AUG 1996
52.233-4	Applicable Law For Breach Of Contract Claim	OCT 2004
52.236-2	Differing Site Conditions (RFO DEVIATION)	JAN 2026
52.236-3	Site Investigation and Conditions Affecting the Work (RFO DEVIATION)	JAN 2026
52.236-5	Material and Workmanship (RFO DEVIATION)	JAN 2026
52.236-6	Superintendence by the Contractor (RFO DEVIATION)	JAN 2026
52.236-7	Permits and Responsibilities (RFO DEVIATION)	JAN 2026
52.236-8	Other Contracts (RFO DEVIATION)	JAN 2026
52.236-9	Protection of Existing Vegetation, Structures, Equipment, Utilities, and Improvements (RFO DEVIATION)	JAN 2026
52.236-10	Operations and Storage Areas (RFO DEVIATION)	JAN 2026
52.236-11	Use and Possession Prior to Completion (RFO DEVIATION)	JAN 2026
52.236-12	Cleaning Up (RFO DEVIATION)	JAN 2026
52.236-13	Accident Prevention (RFO DEVIATION)	JAN 2026
52.236-17	Layout of Work (RFO DEVIATION)	JAN 2026
52.240-90	Security Prohibitions and Exclusions Representations and Certifications (RFO DEVIATION)	MAR 2026
52.240-91	Security Prohibitions and Exclusions (RFO DEVIATION)	MAR 2026
52.243-5	Changes and Changed Conditions (RFO DEVIATION)	OCT 2025
52.244-6	Subcontracts for Commercial Products and Commercial Service (RFO DEVIATION)	MAY 2026
52.246-21	Warranty of Construction	MAR 1994
52.249-2 Alt I	Termination for Convenience of the Government (Fixed-Price) (SEP 1996) – Alternate I	APR 2012
52.249-10	Default (Fixed-Price Construction)	APR 1984
52.253-1	Computer Generated Forms (RFO DEVIATION)	MAY 2026

WBR 1452.209-82 PROHIBITION ON RELEASE OF INFORMATION – BUREAU OF RECLAMATION MAR 2022

(a) The Contractor shall not disclose information pertaining to the services performed under this contract to anyone other than Government or other personnel authorized by the Contracting Officer. The Contractor agrees that it will protect any information obtained from other companies during the performance of this contract from unauthorized use or disclosure for as long as the information remains proprietary and shall refrain from using such information for any purpose other than that for which it was furnished.

(b) In the event that the Contractor intends to employ individuals other than its own staff or other firms in the performance of the contract, each individual or firm shall be required to furnish the same written certification.

(c) The contractor shall insert, in any subcontract that requires the performance of work similar to that being performed by the Contractor, terms that shall conform substantially to the language of this clause, including this paragraph (c).

(End of clause)

WBR 1452.223-80 ASBESTOS-FREE WARRANTY – BUREAU OF RECLAMATION AUG 2021

(a) The Contractor warrants that all items delivered, or work required by the contract, shall be free of asbestos in any form whatsoever.

(b) The Contractor may request the Contracting Officer to approve an exception to this prohibition when an asbestos-free product is not available. Such requests shall be fully documented and submitted as soon as possible after the contractor determines that an asbestos-free product is not available.

(End of clause)

WBR 1452.223-81 SAFETY AND HEALTH - BUREAU OF RECLAMATION OCT 2022

(a) The Contractor shall not require any person employed in the performance of this contract (including subcontracts) to work under conditions which are unsanitary, hazardous, or dangerous to an employee's health or safety.

b) Contractor shall comply with the most current version of the Bureau of Reclamation's *Reclamation Safety and Health Standards* (RSHS) and, if incorporated, 52.236-13 Accident Prevention.

The RSHS manual shall be obtained at:

http://www.usbr.gov/safety/rshs/index.html

(c) Comply with the standards (29 CFR) issued by the Occupational Safety and Health Administration (OSHA), U.S. Department of Labor, www.osha.gov.

(d) In the event there is a conflict between the requirements contained in paragraphs (b) and (c) referenced herein, or in the Statement of Work (SOW) or Performance Work Statement (PWS), the more stringent requirement shall prevail.

(e) If required in the SOW or PWS, the Contractor shall submit a written proposed safety program as prescribed in the RSHS and the written specifications.

(f) The Contractor shall maintain an accurate record of and shall report to the Contracting Officer (or authorized representative) in the manner prescribed by the Contracting Officer, all cases of death, occupational diseases, or traumatic injury to employees or the public involved, and property damage in accordance with the RSHS and OSHA guidelines.

(g) If the contractor deems that an updated version of the RSHS constitutes a substantive change to the contract, affecting price or time (or both), the contractor may request a contract modification in accordance with the terms of the contract.

(End of clause)

WBR 1452.236-84 PRESERVATION OF CULTURAL RESOURCES – BUREAU OF RECLAMATION MAR 2022

(a) Definitions.
"Cultural items" as defined by Native American Graves Protection and Repatriation Act (NAGPRA) include Native American human remains, funerary objects, sacred objects, and objects of cultural patrimony.
"Cultural resources" is a broad term that includes prehistoric, historic, architectural, and traditional cultural properties; specific items include, but are not limited to, human skeletal remains, archaeological artifacts, records, and material remains related to such properties.
"Funerary objects" means Native American items that, as part of the death rite or ceremony of a culture, are reasonably believed to have been placed intentionally at the time of death or later with or near individual human remains.
"Human remains" means the physical remains of the body of a person.
"Native American" means of, or relating to, a tribe, people, or culture that is indigenous to the United States.
"Sacred objects" means Native American items that are specific ceremonial objects needed by traditional Native American religious leaders for the practice of traditional Native American religions by their present-day adherents. These items are specifically limited to objects that were devoted to a traditional Native American religious ceremony or ritual and which have religious significance or function in the continued observance or renewal of such ceremony.
"Objects of cultural patrimony" means Native American items having ongoing historical, traditional, or cultural importance central to the Native American tribe or Native Hawaiian

organization itself, rather than property owned by an individual tribal or organization member. These objects are of such central importance that they may not be alienated, appropriated, or conveyed by any individual tribal or organization member.

(b) General. Federal legislation provides for the protection and preservation of cultural resources that may be impacted or altered as a result of any Federal project, activity, or program or federally licensed or assisted project, activity, or program.

(c) Discovery of Resources. Should the Contractor, or any of the Contractor's employees, subcontractors, or parties operating or associated with the Contractor, in the performance of this contract discover evidence of possible cultural resources, the Contractor shall immediately cease work at that location and provide oral notification to the contracting officer, giving location and nature of the findings. The Contractor shall forward a written report of findings to the Contracting Officer within 48 hours.

(i) If a cultural resource is determined by Reclamation to be a Native American cultural item, then the Contractor shall cease the activity in the area of the discovery, make a reasonable effort to protect the items discovered, and wait for written approval from the Contracting Officer before resuming activity.

(ii) If the discovery occurs on tribal lands, the Contractor shall immediately orally notify the responsible tribal official and the Contracting Officer and follow with written confirmation within 48 hours to the responsible tribal official and the contracting officer. (The contracting officer will supply the name and phone number of the tribal official.

(iii) The Contractor shall exercise care so as not to disturb or damage any cultural resources discovered during the execution of this contract and shall provide such cooperation and assistance as may be necessary to preserve the findings for removal or other disposition by Reclamation. The Contractor shall not resume work in the area of a discovery until written notice to proceed is received from the contracting officer.

(d) Approval of Use Areas and Borrow Sources. If the Contractor proposes to use a location other than an approved location (approved locations to be provided by the contracting officer), the location(s) must first be approved for use by the contracting officer. When considering an unapproved use area or borrow source, the Contractor shall submit a map showing the location to the contracting officer at least 45 calendar days in advance of any proposed use. The Contractor or his subcontractors shall take no action to use or alter the proposed location until written approval is provided by the contracting officer.

(e) Compensation for Delays. Where appropriate by reason of discovery, the contracting officer may order changes in the schedule or work. If such delays or changes are ordered, any equitable adjustment under the contract will be provided in accordance with the applicable clauses of the contract.

(f) Subcontractors. The Contractor shall insert this clause in all subcontracts that involve performance of work on job site terrain.

(g) Cost. Except as provided in subsection (e) above, the cost of complying with this contract clause shall be included in the prices offered in the schedule for other items of work.

(h) Government Access. The Contractor's arrangement with landowners shall permit the Government or its representatives access to the land to identify cultural resources and conduct appropriate inspections during the Contractor's use of the area or during material procurement.

(End of clause)

WBR 1452.237-80 SECURITY REQUIREMENTS – BUREAU OF RECLAMATION – ALTERNATE III **MAR 2022**

(a) General Security Requirements:

(1) This clause addresses security requirements, including general procedural requirements, information security requirements, contractor employee suitability requirements, identification card requirements, site security requirements, vessel exclusion barriers, and information technology security requirements. Within this clause, COR means Contracting Officer's Representative. If there is no COR appointed and identified to the Contractor, the term instead will mean the Program Manager or any other authorized individual responsible for technical oversight under the contract. “Work site” means the Government facility, office, construction site, and any other area within the Government office or facility that the Contractor must access to accomplish work under this contract.

(2) The work performed under this contract shall only be accomplished by individuals (in the employment of the Contractor or any subcontractors) whose conduct and behavior is consistent with the efficiency of the Federal Service and the requirements of this contract, and who are acceptable to the contracting officer. If Reclamation finds a Contractor employee to be unsuitable or unfit for his or her assigned duties, the contracting officer will direct the Contractor to remove the individual from the contract and access to the Federal facility at which the contract activities are occurring.

(3) The Contractor’s employees governed by this contract may need access to sensitive information and/or sensitive areas. The Federal Government (Government) reserves the right, in its sole discretion, to determine suitability of Contractor personnel and deny access to any sensitive information or project specific area to any personnel for any cause.

(4) The Contractor is responsible for informing and ensuring compliance by its employees with any applicable security procedures of the Government facility where work may be performed under this contract.

(5) Any Contractor employee that will have access to a Federally-controlled facility or information system will be required to have a Government-issued identification card, consisting of a Personal Identity Verification (PIV) Card, a temporary identification card, or a visitor badge. (Note: within the Department of the Interior this card is known as a DOI Access Card.) During performance of the contract, the Contractor shall keep the COR apprised of any changes in personnel, or changes in personnel access or duration, to ensure that performance is not delayed by compliance with credentialing processes.

(6) A Contractor employee will not be provided access to a Government facility or information system until a Government PIV Card, temporary identification card, or visitor identification badge has been issued to the Contractor employee. For those individuals that will be receiving a PIV Card, the Government may, at its discretion, issue a temporary identification card or visitor identification badge after the electronic background investigation forms have been received and the investigation is initiated.

(7) All Contractor employees shall access the facility via the facility's entry screening system and visibly display the Government-issued PIV Card, temporary identification card, or visitor identification badge at all times. Contractor employees must visibly wear the Government-issued identification card at all times they are on Government facilities. Contractor employees are responsible for the safekeeping of all Government-issued identification cards, whether on-site or off-site. Cards that have been lost, damaged, or stolen must be reported to the COR and DOI Access Sponsor immediately, but not later than within 24 hours. The Contractor shall return all identification cards and card keys and any other Government property and information upon completion of performance or when personnel depart permanently or for a period of 7 days or more. The Contractor may be required to turn in access control cards or identification cards on a daily basis.

(8) Misuse or loss of access control or identification cards, or failure to comply with required surrender of such cards may, at Government discretion, result in Contractor personnel being denied access to the work site, at no cost to Government. The Contractor may be charged up to $500 for each occurrence for any required replacement of Government-issued access control or identification cards due to loss or misuse. At the end of contract performance, or when a Contractor employee is no longer working under this contract, the Contractor shall ensure that all access control and identification cards are returned to the COR.

(9) All Contractor personnel, including subcontractor personnel, with access to the work site shall be U.S. citizens or foreign individuals legally residing in, or legally admitted to, the U.S. For all non-U.S. citizens working under this contract, irrespective of length of time working on the contract, the Contractor shall provide to the COR, legible and valid copies of the individual's passport and visa (unless individual is on the Visa Waiver Program) a minimum of 14 calendar days prior to beginning work or arriving at the facility. A driver's license is not acceptable identification. In addition, a completed form I-94 shall be submitted to the COR upon the individual's arrival at the work facility and prior to beginning work.

(10) The Contractor shall report all contacts with entities, individuals, and counsel/representatives (including foreign entities and foreign nationals) who seek in any way to obtain unauthorized access to sensitive information or areas. The Contractor shall report any violations of contract provisions, laws, executive orders, regulations, and guidance to the contracting officer. The Contractor shall report any information raising a doubt as to whether an individual's eligibility for continued employment or access to sensitive information is consistent with the interests of National Security and the Public Trust.

(11) Unsanctioned, negligent, or willful inappropriate action on the part of the Contractor (or its employees) may result in termination of the contract or removal of some Contractor employees from Reclamation facilities at no cost to the Government. These actions include, but are not limited to, exploration of a sensitive system and/or information, introduction of unauthorized and/or malicious software, inappropriate release of sensitive information, or failure to follow prescribed access control policies and/or security procedures. Failure to comply with Reclamation policies, procedures, or other published security requirements may result in termination of the contract or removal of some contracted employees from Reclamation buildings and/or facilities at no cost to the Government.

(12) All provisions of this clause shall equally apply to all subcontractors. The Contractor shall incorporate the substance of this clause in all subcontracts.

(13) These security requirements apply to all sections of this Contract including Contract Drawings and other Contract Specifications as applicable. Related documents include other general provisions of Construction or Operations and Maintenance type Contracts, including FAR clauses by reference or as amended by related documents.

(b) Information Security Requirements.
(1) Sensitive Information. The term "sensitive information" means any information which warrants a degree of protection and administrative control as defined by Reclamation or that meets the criteria for exemption from public disclosure set forth under Sections 552 and 552a of Title 5, United States Code: the Freedom of Information Act and the Privacy Act. Sensitive information is generally categorized as CONTROLLED UNCLASSIFIED INFORMATION (CUI), but in some cases may include other unclassified information. (The protection of National Security information is beyond the scope of this clause. If any work on National Security information is required under this contract, it is addressed under other contract clauses.) The Contractor shall protect this type of information from unauthorized release into public domain, or to unauthorized persons, organizations, or subcontractors. Information which, either alone or in aggregate, is deemed sensitive by Reclamation shall be handled and protected in accordance with Reclamation Directives and Standards SLE 02-01 Identifying and Safeguarding Controlled Unclassified Information (CUI), which is available from the COR or at http://www.usbr.gov/recman/DandS.html#sle.

(i) Any Government-furnished information or material does not become the property of the Contractor and may be withdrawn at any time. Upon expiration or termination of the contract, all documents released to the

Contractor and any material created using data from such documents shall be returned to the COR for final disposition. Government-furnished information residing on any electronic systems (laptops, servers, desktops, media) shall be deleted from those systems using a COR-approved data erasure solution. Only with prior authorization from the contracting officer may the Contractor retain the material. The Contractor or subcontractor shall not disclose or release the materials provided to the Contractor to any individuals of the Contractor's organization not directly engaged in providing services under the contract or that do not have a valid need-to-know. All technical data provided to the Contractor by the Government shall be protected from public or private disclosure in accordance with the markings printed on them. All other information relating to the items to be delivered or the services to be performed under this contract shall not be disclosed by any means without prior approval of the contracting officer. Prohibited dissemination or disclosure includes, but is not limited to: permitting access to such information by foreign nationals or by immigrant aliens who may be employed by the Contractor, publication of technical or scientific papers, advertising, disclosure to Contractor staff not investigated and deemed acceptable at the appropriate information sensitivity level, and any other public release. The Contractor shall maintain, and furnish upon request of the contracting officer, records of the names of individuals who have access to sensitive material in its custody and the sensitive material to which the individuals had access. All questions regarding information security, access, and control shall be referred to the COR.

(ii) The Contractor shall not release to anyone outside the Contractor’s organization any sensitive, or otherwise protected information, regardless of medium in which it is contained (for example, film, tape, document, electronic), pertaining to any part of this contract or any Reclamation program or activity, unless the contracting officer has given prior written approval. This includes, but is not limited to, news releases, marketing promotions, articles, interviews, reports, social media posts, and any other media releases. Requests for approval shall identify the specific information to be released, the medium to be used, the purpose for the release, and a description of the need-to-know. The Contractor shall submit its request to the contracting officer ten business days before the proposed date for release. Subcontractors shall submit requests for authorization to release through the prime Contractor to the contracting officer.

(iii) The Contractor shall notify the COR immediately when known or suspected loss/compromise of sensitive information or other documents, notes, drawings, sketches, reports, photographs, exposed film or similar

information which may affect the security interests of Government has occurred. This requirement extends to employees and other personnel working on behalf of the Contractor, and expands responsibility to include prompt reporting of security issues, including observed or subsequently discovered efforts by unauthorized persons to gain unauthorized access to sensitive information.

(2) Classified Information.

(i) The disclosure of U.S. Government documents by third parties can result in damage to our national security. While this contract may not deal directly with classified information, each contractor is obligated to protect classified information pursuant to all applicable laws and to use Government information technology systems in accordance with agency procedures so that the integrity of such systems is not compromised.

(ii) Unauthorized disclosures of classified documents (whether in print, on a blog, or on websites, or other electronic or non-electronic media) do not alter the documents' classified status or automatically result in declassification of the documents. To the contrary, classified information, whether or not already posted on public websites or disclosed to the media, remains classified, and must be treated as such by Federal employees and contractors, until it is declassified by an appropriate U.S. Government authority. Executive Order 13526, Classified National Security Information (December 29, 2009), Section 1.1.(c) states, "Classified Information shall not be declassified automatically as a result of any unauthorized disclosure of identical or similar information." Although the Department has taken steps to prevent access to publicly disclosed classified materials from Departmental computers, it is important to understand our continuing duties and responsibilities in this regard.

(iii) Contractors (which include all employees of the contractor, as well as subcontractors and its employees performing work for the contractor) are reminded of the following obligations with respect to the treatment of classified information and the use of unclassified government information technology systems:

(iv) The contractor shall not, while using unclassified Government computers or other devices (such as phones or tablets) access documents that are marked classified (including classified documents made publicly available by a third party), as doing so risks that material still classified will be placed onto unclassified systems. This requirement does not restrict contractor access to unclassified, publicly available news reports (and other unclassified material) that may in turn discuss classified material, as distinguished from access to underlying documents that themselves are marked classified (including if the underlying classified documents are available on public web sites or otherwise in the public domain).

(v) For contracts that require access to classified information, the contractor is responsible for obtaining the required national security clearance through the Department of the Defense National Industrial Security Program Operating Manual (NISPOM). Any classified contracts will be coordinated through the Reclamation Chief Security Officer, or for IT requirements, the

Bureau Chief Information Security Officer. No contractor shall access classified information unless proper clearances have been obtained and transmitted to Reclamation. For further information, refer to 443 DM 1 or DOD NISPOM 5220.22-M dated February 28, 2006 (incorporating change 2 dated May 18, 2016).

(vi) Classified information shall not be removed from official premises.

(vii) Classified information shall not be disclosed without proper authorization.
(c) Reserved
(d) Reserved
(e) Site Security Requirements

(1) General Description. This section provides provisions to ensure the full security integrity of the facility and personnel working at the facility. The work of this section may involve interfaces with a number of Government security personnel, normally coordinated through the designated COR. The Contractor is responsible for ensuring that activities are accomplished in a manner that complies fully with applicable security statutes, regulations, policies, directives, and standards.

(2) Government Security Personnel. When and where applicable, personnel may be assigned to control access, secure materials or activities at the work site, or escort Contractor personnel in sensitive areas. Personnel may include security managers, security guards, security contractors acting as agents of the Government, law enforcement personnel, or other contractors or employees. These individuals may be used to ensure the overall security and integrity of the site or building and provide controlled access. These individuals may conduct inspections of all workers, vehicles, equipment, or materials entering, or re-entering the work site. The inspection may be done visually, with walk-through and/or hand-held metal detectors, or by other means as may be deemed necessary by Reclamation.

(3) Contractor Guard Force. At the Contractor's sole discretion, and at the Contractor's own expense, with prior written Government approval, a Contractor may be authorized to hire its own guards to secure Contractor-owned equipment and/or to protect Contractor employees or subcontractors. If such a relationship is permitted, the Contractor shall be exclusively liable for all guard activities to include action or inaction of Contractor's guard personnel. The Government will not offer nor provide any indemnification. Contractor shall be solely responsible for guards at all times to include any supervision, oversight, and for the development of local guard orders and/or procedures. The Contractor shall be responsible for coordinating all guard activities with the COR and shall develop and submit to the COR, for advance approval, any guard orders and/or guard procedures.

(4) Additional Security-Related Submittals

(i) Visitor List. The Contractor shall furnish to the COR, in advance, notification of visit of any Contractor-sponsored visitor to a Government-controlled facility. This notification should be in writing and must include the purpose or nature of the visit, the full name of the visitor, and the

full name and phone number of the designated sponsor who will be physically responsible for escorting the visitor for the duration of the scheduled visit.

(ii) Delivery Schedule. The Contractor shall furnish to the COR, in advance, a schedule for all deliveries. This list shall include estimated delivery date, time, nature of the materials being delivered, and – where available – the name of delivery company and type of vehicle.

(iii) Explosives Security Plan. The Contractor shall furnish to the COR for approval, in advance, an explosives security plan at any work site where explosives will be stored or used.

(5) General Provisions.

(i) General. The Contractor shall comply with the Government's site security procedures as specified, and as requested subsequent to award of Contract. Failure of the Contractor to comply with required access controls, information handling procedures, or any other security controls or procedures, may result in revocation of Contractor personnel access to the work site. The Government reserves the right to modify or clarify security provisions of this contract based on changing political and civil circumstances, and perceived threats to personnel or the facility.

(ii) Security Facilities and Equipment. The Contractor shall use security facilities and equipment only for the purposes intended and as directed by the contracting officer. The Contractor shall comply with the Government's instructions for use of secure storage areas, site enclosure and gates, temporary security lighting, building space enclosure, and lockup devices and systems established for detection, monitoring, signaling, and alarming field office facilities. Measures necessary to secure the integrity of materials, equipment, and tools installed or used in furtherance of this contract shall be at no cost to the Government.

(iii) Security Personnel Availability/Work Schedules. The Contractor shall notify the COR at least 48 hours in advance of any projected work which might impact on security or require the scheduling of extended security personnel support. The Contractor shall provide a weekly work schedule, such as anticipated delivery of materials, use of explosives or heavy machinery, and extra time needed for continuous or inherently lengthy construction or project specific operations (such as concrete placement).

(iv) Deliveries. The Contractor shall provide at least one day's advance notice of major deliveries, including time of arrival and trucks/carriers/documentation to be expected for arrival at work site. The Contractor shall provide reasonable advanced notice of deliveries which must be accommodated/accepted at times other than the Government's established working hours. Failure to provide adequate advanced notice may result in delivery delays at the Contractor's expense.

(v) Site Access. All Contractor personnel will be issued appropriate identification and must comply with all local access control procedures. The Government reserves the exclusive right to refuse or disallow any vehicular or pedestrian access to any Government-controlled facility, lands, or for any deliveries to the work site, regardless if access was scheduled or unscheduled.

(vi) Inspections and Searches. The Government reserves unqualified and unlimited right at any time to conduct security-related inspections or searches of work, material, equipment, personnel, and temporary facilities at the work site. The Contractor shall afford unrestricted access to work and allow surveillance and inspection by any Government personnel as authorized by the COR. The Government reserves the right to conduct searches of articles and personal effects of all Contractor personnel, both at point of entry and exit from the work site or Government facility. All Contractor personnel entering and leaving the work site may be required to pass through a Walk-Through-Metal-Detector device and/or other detection devices.

(vii) After Duty Hours. No Contractor personnel shall be permitted access to the work site after the Government's established working hours without prior authorization from the Government. All personnel seeking access to the site after the Government's established working hours may be required to sign in and out in a visitor's log that may be maintained by the on duty security personnel (if any).

(viii) Access Procedures at Sensitive Areas. In some instances, the Contractor may be required to erect temporary security barriers and doors to isolate a sensitive area as instructed by the Government. The Contractor may be required to install locks and thereafter control access. The Contractor shall comply with the Government's requirement for limited and escorted access to the sensitive area. The Contractor shall notify the COR at least one day prior to each requested access to the sensitive area that is outside of the Government's established working hours.

(ix) Reported Violations. Where an indication, report, or observation of unauthorized access or performance of unauthorized work has occurred, the Government reserves the right to stop work and deny access until the circumstance and work can be investigated, inspected, tested, and resolved. The entire cost of such stoppages and resolutions shall be borne by Contractor, except when alleged violations of established security requirements, after investigation, are found not to be the fault of the Contractor.

(x) Briefings. Contractor personnel who will be assigned to this project, and who will have access to the work site, may be required to attend Government-conducted security briefings. The Government reserves the right to conduct security briefings for Contractor personnel and visitors at all levels of involvement in performance of work and maintenance of security. Required briefings may include, but are not limited to, the following: Information Security, Site Security Requirements and Procedures, Security Awareness, Delivery Methods and Inspections, Storage Requirements, Reporting Requirements, Supervisory Procedures, Contractor Employee Conduct, Visitor Control, and Threats.

(xi) Key Control. Control of keys/access codes and lock combinations is essential for the Government's project security. The Contractor shall not allow keys or access codes to be duplicated or removed from the work site, nor allow lock combinations to be divulged without specific written advanced authorization from the COR. Such loss of control, observed or suspected, may result in a requirement to change locks involved at the Contractor's expense. At the direction of the COR, the Contractor shall provide duplicate keys and lock combinations to Government security personnel when requested for the purpose of security inspections and

emergency actions, including keys, combinations, and access codes needed for unrestricted access to every area and element of the project. The Contractor may be required to establish a key control program that is acceptable to the Government for Government-issued keys and for heavy machinery parked at the construction site (if this is a construction contract).

(xii) Vehicle Control. In general, parking of vehicles on the work site shall not be permitted, except for tractors, cranes, and similar equipment used directly in performance of work, for delivery of materials/supplies, and for removal of waste and surplus material. The Government may designate an approved contractor employee parking area. Upon entering the work site, vehicles and drivers may be subject to search and inspection. The Contractor shall obtain authorization from the COR to park the Contractor's official vehicles and motorized vehicular construction equipment that are required/desired to be parked on the work site. Vehicles in violation may be towed off the work site at the Contractor's expense. Where Government-designated employee parking is not available, parking of construction employees' automobiles and similar transportation vehicles may be excluded from the work site. It is the Contractor's responsibility to arrange for suitable accommodation for these vehicles.

(xiii) Prohibited/Restricted Items. Prohibited/restricted items and activities on the work site include but are not limited to the following: firearms and other weapons, except as specifically authorized by the COR in compliance with state and Federal laws and regulations; drugs, including narcotics, barbiturates, marijuana, alcoholic beverages, and similar substances, except for use with valid medical prescription; and explosives.

(xiv) Exceptions for Explosives. When needed for use in specifically limited amounts and controlled circumstances for construction work, explosives may be brought onsite with written prior authorization from the COR. As a hazardous material, the Contractor shall treat the use of explosives in accordance with regulations and guidance provided by Federal, State, and local authorities. The storage of explosives shall be in accordance with requirements of the Bureau of Alcohol, Tobacco, and Firearms or the State in which they are stored. If onsite storage of explosives is necessary, explosives shall be stored at a pre-designated, secure site approved by the COR. Prior to Government approval of storage, the Contractor shall develop and submit to the COR a complete storage/security/retrieval plan for approval. The storage/security plan can be included in a "Blasting Safety Plan." The plan shall make accommodations for surveillance, detection, and response. Explosives firing systems shall be stored off-site and under no circumstances shall be stored together with explosives.

(xv) Photography. The use of photographic equipment and taking of photographs shall only be allowed as authorized by the COR.

(f) Reserved

(End of clause)

WBR 1452.243-80 MODIFICATION PROPOSALS – BUREAU OF RECLAMATION MAR 2022

(a) In submitting any proposal for a modification under this contract (including any proposal for an equitable adjustment resulting from a change under the FAR Changes clause of this contract), the contractor shall:

(1) Comply with the contract time limits for submission of a proposal or as specified by the contracting officer;

(2) Apply the contract cost principles and procedures in Part 31 of the Federal Acquisition Regulation (FAR) in effect on the date of this contract;

(3) Furnish a breakdown of all costs estimated to complete the work required by the modification (i.e., cost of added work, incurred cost of deleted work already performed, estimated cost of deleted work not yet performed, and net cost of the modification) to include all costs associated with materials (identified by item and quantity), equipment (identified by item, quantity and whether contractor-owned or rented), categories of direct labor, bond and insurance premium adjustments, subcontracts, overhead and other indirect costs, profit/fee, and any other pricing information requested by the contracting officer, in sufficient detail to permit an analysis of fair and reasonable price;

(4) Furnish a written justification for any requested time extensions; and

(5) For any pricing adjustment expected to exceed the threshold at FAR 15.403-4 requiring certified cost or pricing data (considering both increases and decreases) --

(i) Submit certified cost and pricing data using the format specified in Table 15-2 of FAR 15.408 unless the contracting officer agrees that an exception applies under the circumstances set forth in FAR 15.403-1;

(ii) Certify in substantially the format prescribed in FAR 15.406-2 that to the best of its knowledge and belief, the data are accurate, complete and current as of the date of agreement on the negotiated price of the modification; and

(iii) Comply with the requirements of either the FAR 52.215-12 Subcontractor Certified Cost or Pricing Data clause or the FAR 52.215-13 Subcontractor Certified Cost or Pricing Data -- Modifications clause of this contract when the adjustment includes a subcontract modification involving a pricing adjustment expected to exceed the threshold at FAR 15.403-4 requiring certified cost or pricing data.

(b) Under the FAR Changes clause of this contract, failure of the contractor to timely assert its right for an adjustment or to submit a proposal for an adjustment by the date specified in the clause (or another date specified by the contracting officer) may result in a unilateral adjustment

of the contract by the contracting officer pursuant to the FAR 52.233-1 Disputes clause of this contract.

(End of clause)

DIAR 1452.203-70 RESTRICTIONS ON ENDORSEMENTS- DEPARTMENT OF THE INTERIOR JUL 1996

The Contractor shall not refer to contracts awarded by the Department of the Interior in commercial advertising, as defined in FAR 31.205-1, in a manner which states or implies that the product or service provided is approved or endorsed by the Government or is considered by the Government to be superior to other products or services. This restriction is intended to avoid the appearance of preference by the Government toward any product or service. The Contractor may request the Contracting Officer to make a determination as to the propriety of promotional material.

(End of clause)

DIAR 1452.204-70 RELEASE OF CLAIMS – DEPARTMENT OF THE INTERIOR JUL 1996

After completion of work and prior to final payment, the Contractor shall furnish the Contracting Officer with a release of claims against the United States relating to this contract. The Release of Claims form (DI-137) shall be used for this purpose. The form provides for exception of specified claims from operation of the release.

(End of clause)

DIAR 1452.215-70 EXAMINATION OF RECORDS BY DEPARTMENT OF THE INTERIOR APR 1984

For purposes of the Examination of Records by the Comptroller General clause of this contract (FAR 52.215-1), the Secretary of the Interior, the Inspector General, and their duly authorized representative(s) from the Department of the Interior shall have the same access and examination rights as the Comptroller General of the United States.

(End of clause)

DIAR 1452.228-70 LIABILITY INSURANCE - DEPARTMENT OF THE INTERIOR JUL 1996

(a) The Contractor shall procure and maintain during the term of this contract and any extension thereof liability insurance in form satisfactory to the Contracting Officer by an insurance company which is acceptable to the Contracting Officer. The named insured parties under the policy shall be the Contractor and the United States of America. The amounts of the insurance shall be not less than as follows:

$100,000 each person
$500,000 each occurrence
$20,000 property damage

(b) Each policy shall have a certificate evidencing the insurance coverage. The insurance company shall provide an endorsement to notify the Contracting Officer 30 days prior to the effective date of cancellation or termination of the policy or certificate; or modification of the policy or certificate which may adversely affect the interest of the Government in such insurance. The certificate shall identify the contract number, the name and address of the Contracting Officer, as well as the insured, the policy number and a brief description of contract services to be performed. The contractor shall furnish the Contracting Officer with a copy of an acceptable insurance certificate prior to beginning the work.

(End of clause)

DIAR 1452.237-70 INFORMATION COLLECTION – DEPARTMENT OF THE INTERIOR JUL 1996

If performance of this contract requires the contractor to collect information on identical items from ten or more public respondents, no action shall be taken or funds expended in the solicitation or collection of such information until the contractor has received from the Contracting Officer written notification that approval has been obtained from the Office of Management and Budget (OMB) pursuant to the Paperwork Reduction Act of 1980. The Contractor agrees to provide all information requested by the Contracting Officer which is necessary to obtain approval from OMB.

(End of clause)

FAR 52.222-90 ADDRESSING DEI DISCRIMINATION BY FEDERAL CONTRACTORS - (RFO DEVIATION) MAY 2026

(a) *Definitions*. As used in this clause—
Program participation means membership or participation in, or access or admission to: training, mentoring, or leadership development programs; educational opportunities; clubs; associations; or similar opportunities that are sponsored or established by the contractor or subcontractor.
Racially discriminatory diversity, equity, and inclusion (DEI) activities means disparate treatment based on race or ethnicity in the recruitment, employment (e.g., hiring, promotions), contracting (*e.g.*, vendor agreements), program participation, or allocation or deployment of an entity's resources.
(b) In connection with the performance of work under this contract, the Contractor agrees as follows:
(1) The Contractor will not engage in any racially discriminatory DEI activities;
(2) The Contractor will furnish all information and reports, including providing access to books, records, and accounts, as required by the Contracting Officer, for purposes of ascertaining compliance with this clause;

(3) In the event of the Contractor's or a subcontractor's noncompliance with this clause, this contract may be canceled, terminated, or suspended in whole or in part, and the Contractor or subcontractor may be declared ineligible for further Government contracts;
(4) The Contractor will report any subcontractor's known or reasonably knowable conduct that may violate this clause to the Contracting Officer and take any appropriate remedial actions directed by the Contracting Officer; and
(5) The Contractor will inform the Contracting Officer if a subcontractor sues the Contractor and the suit puts at issue, in any way, the validity of this clause.
(6) The Contractor recognizes that compliance with the requirements of this clause are material to the Government's payment decisions for purposes of 31 U.S.C. 3729(b)(4).
(c) The Contractor must include the substance of this clause, including this paragraph (c), in subcontracts at any tier, including those for commercial products and commercial services, except those where the place of delivery or performance is outside the United States.

(End of clause)

FAR 52.252-6 AUTHORIZED DEVIATIONS IN CLAUSES NOV 2020

(a) The use in this solicitation or contract of any Federal Acquisition Regulation (48 CFR Chapter 1) clause with an authorized deviation is indicated by the addition of "(DEVIATION)" after the date of the clause.

(b) The use in this solicitation or contract of any Federal Acquisition Regulation (48 CFR Chapter 5) clause with an authorized deviation is indicated by the addition of "(DEVIATION)" after the name of the

(End of clause)

SECTION J - LIST OF DOCUMENTS, EXHIBITS AND OTHER ATTACHMENTS

Attachment Number	List of Documents, Exhibits, and other Attachments
1	General Decision Number: CA20260007 – Dated 5/18/2026
2	Release of Claims
3	Offeror Responsibility Information

"General Decision Number: CA20260007 05/18/2026

State: California

Construction Types: Building, Heavy and Highway

Counties: California Counties of
Alpine, Amador, Butte, Colusa, El
Dorado, Glenn, Lassen, Marin, Modoc,
Napa, Nevada, Placer, Plumas,
Sacramento, Shasta, Sierra, Siskiyou,
Solano, Sonoma, Sutter, Tehama, Trinity,
Yolo and Yuba

Building Construction Projects (excluding Amador County only)
Dredging Projects-Includes Dredging Projects (does not include hopper dredge work)
Heavy Construction Projects (excludes water well drilling)
Highway Construction Projects

Modification Number	Publication Date
3	01/23/2026
4	05/18/2026

ASBE0016-001 01/01/2024

	Rates	Fringes
ASBESTOS WORKERS/INSULATOR: INCLUDES THE APPLICATION OF ALL INSULATING MATERIALS, PROTECTIVE COVERINGS, COATINGS, AND FINISHES TO ALL TYPES OF MECHANICAL SYSTEMS (AREA 2)	$ 64.56	25.07
ASBESTOS WORKERS/INSULATOR: INCLUDES THE APPLICATION OF ALL INSULATING MATERIALS, PROTECTIVE COVERINGS, COATINGS, AND FINISHES TO ALL TYPES OF MECHANICAL SYSTEMS (AREA 1)	$ 84.76	25.07

ASBE0016-007 05/01/2025

	Rates	Fringes
ASBESTOS REMOVAL WORKER/HAZARDOUS MATERIAL HANDLER: INCLUDES PREPARATION, WETTING, STRIPPING, REMOVAL, SCRAPPING, VACUUMING, BAGGING AND DISPOSING OF ALL INSULATION MATERIALS FROM MECHANICAL SYSTEMS, WHETHER THEY CONTAIN ASBESTOS OR NOT (AREA 2)	$ 44.73	12.75
ASBESTOS REMOVAL WORKER/HAZARDOUS MATERIAL HANDLER: INCLUDES PREPARATION, WETTING, STRIPPING, REMOVAL, SCRAPPING, VACUUMING, BAGGING AND DISPOSING OF ALL INSULATION MATERIALS FROM MECHANICAL SYSTEMS, WHETHER THEY CONTAIN ASBESTOS OR NOT (AREA 1)	$ 35.31	12.75

BOIL0549-002 01/01/2021

	Rates	Fringes
BOILERMAKER: (2) REMAINING COUNTIES	$ 45.60	38.99
BOILERMAKER: (1) MARIN & SOLANO COUNTIES	$ 49.62	41.27

BRCA0003-001 08/01/2024

	Rates	Fringes
MARBLE FINISHER	$ 42.06	19.80

BRCA0003-004 05/01/2024

	Rates	Fringes
BRICKLAYER (AREA 2)	$ 57.02	28.50
BRICKLAYER (AREA 1)	$ 52.76	25.01

BRCA0003-008 07/01/2024

	Rates	Fringes
TERRAZZO WORKER/SETTER	$ 60.58	29.79
TERRAZZO FINISHER	$ 44.93	20.98

BRCA0003-010 04/01/2024

	Rates	Fringes
TILE LAYER AREA 4: SONOMA	$ 56.79	22.54
TILE LAYER AREA 3: MARIN, NAPA, SOLANO, SISKIYOU	$ 59.92	22.62
TILE LAYER AREA 2: ALPINE, AMADOR	$ 55.17	22.52
TILE LAYER AREA 1: BUTTE, COLUSA, EL DORADO, GLENN, LASSEN, MODOC, NEVADA, PLACER, PLUMAS, SACRAMENTO, SHASTA, SIERRA, SUTTER, TEHEMA, YOLO, YUBA	$ 55.55	21.08
TILE FINISHER AREA 2: ALPINE, AMADOR	$ 34.76	19.22
TILE FINISHER AREA 4: SONOMA	$ 35.78	19.23
TILE FINISHER AREA 3: MARIN, NAPA, SOLANO, SISKIYOU	$ 37.75	19.28
TILE FINISHER AREA 1: BUTTE, COLUSA, EL DORADO, GLENN, LASSEN, MODOC, NEVADA, PLACER, PLUMAS, SACRAMENTO, SHASTA, SIERRA, SUTTER, TEHEMA, YOLO, YUBA	$ 35.00	17.44

BRCA0003-014 08/01/2024

	Rates	Fringes
MARBLE MASON	$ 61.72	30.31

CARP0034-001 07/01/2021

	Rates	Fringes
DIVER: MANIFOLD OPERATOR (STANDBY) DEPTH PAY (SURFACE DIVING): 050 TO 100 FT $2.00 PER FOOT 101 TO 150 FT $3.00 PER FOOT 151 TO 220 FT $4.00 PER FOOT 221 FT.-DEEPER $5.00 PER FOOT SATURATION DIVING: THE STANDBY RATE SHALL APPLY UNTIL SATURATION STARTS. THE SATURATION DIVING RATE APPLIES WHEN DIVERS ARE UNDER PRESSURE CONTINUOUSLY UNTIL WORK TASK AND DECOMPRESSION ARE COMPLETE. THE DIVER RATE SHALL BE PAID FOR ALL SATURATION HOURS. DIVING IN ENCLOSURES: WHERE IT IS NECESSARY FOR DIVERS TO ENTER PIPES OR TUNNELS, OR OTHER ENCLOSURES WHERE THERE IS NO VERTICAL ASCENT, THE FOLLOWING PREMIUM SHALL BE PAID: DISTANCE TRAVELED FROM ENTRANCE 26 FEET TO 300 FEET: $1.00 PER FOOT. WHEN IT IS NECESSARY FOR A DIVER TO ENTER ANY PIPE, TUNNEL OR OTHER ENCLOSURE LESS THAN 48"" IN HEIGHT, THE PREMIUM WILL BE $1.00 PER FOOT. WORK IN COMBINATION OF CLASSIFICATIONS: EMPLOYEES WORKING IN ANY COMBINATION OF CLASSIFICATIONS WITHIN THE DIVING CREW (EXCEPT DIVE SUPERVISOR) IN A SHIFT ARE PAID IN THE CLASSIFICATION WITH THE HIGHEST RATE FOR THAT SHIFT	$ 59.51	34.69

DIVER: MANIFOLD OPERATOR (MIXED GAS) DEPTH PAY (SURFACE DIVING): 050 TO 100 FT $2.00 PER FOOT 101 TO 150 FT $3.00 PER FOOT 151 TO 220 FT $4.00 PER FOOT 221 FT.-DEEPER $5.00 PER FOOT SATURATION DIVING: THE STANDBY RATE SHALL APPLY UNTIL SATURATION STARTS. THE SATURATION DIVING RATE APPLIES WHEN DIVERS ARE UNDER PRESSURE CONTINUOUSLY UNTIL WORK TASK AND DECOMPRESSION ARE COMPLETE. THE DIVER RATE SHALL BE PAID FOR ALL SATURATION HOURS. DIVING IN ENCLOSURES: WHERE IT IS NECESSARY FOR DIVERS TO ENTER PIPES OR TUNNELS, OR OTHER ENCLOSURES WHERE THERE IS NO VERTICAL ASCENT, THE FOLLOWING PREMIUM SHALL BE PAID: DISTANCE TRAVELED FROM ENTRANCE 26 FEET TO 300 FEET: $1.00 PER FOOT. WHEN IT IS NECESSARY FOR A DIVER TO ENTER ANY PIPE, TUNNEL OR OTHER ENCLOSURE LESS THAN 48"" IN HEIGHT, THE PREMIUM WILL BE $1.00 PER FOOT. WORK IN COMBINATION OF CLASSIFICATIONS: EMPLOYEES WORKING IN ANY COMBINATION OF CLASSIFICATIONS WITHIN THE DIVING CREW (EXCEPT DIVE SUPERVISOR) IN A SHIFT ARE PAID IN THE CLASSIFICATION WITH THE HIGHEST RATE FOR THAT SHIFT.....$ 64.51 34.69

DIVER: DIVER WET DEPTH PAY (SURFACE DIVING): 050 TO 100 FT $2.00 PER FOOT 101 TO 150 FT $3.00 PER FOOT 151 TO 220 FT $4.00 PER FOOT 221 FT.-DEEPER $5.00 PER FOOT SATURATION DIVING: THE STANDBY RATE SHALL APPLY UNTIL SATURATION STARTS. THE SATURATION DIVING RATE APPLIES WHEN DIVERS ARE UNDER PRESSURE CONTINUOUSLY UNTIL WORK TASK AND DECOMPRESSION ARE COMPLETE. THE DIVER RATE SHALL BE PAID FOR ALL SATURATION HOURS. DIVING IN ENCLOSURES: WHERE IT IS NECESSARY FOR DIVERS TO ENTER PIPES OR TUNNELS, OR OTHER ENCLOSURES WHERE THERE IS NO VERTICAL ASCENT, THE FOLLOWING PREMIUM SHALL BE PAID: DISTANCE TRAVELED FROM ENTRANCE 26 FEET TO 300 FEET: $1.00 PER FOOT. WHEN IT IS NECESSARY FOR A DIVER TO ENTER ANY PIPE, TUNNEL OR OTHER ENCLOSURE LESS THAN 48"" IN HEIGHT, THE PREMIUM WILL BE $1.00 PER FOOT. WORK IN COMBINATION OF CLASSIFICATIONS: EMPLOYEES WORKING IN ANY COMBINATION OF CLASSIFICATIONS WITHIN THE DIVING CREW (EXCEPT DIVE SUPERVISOR) IN A SHIFT ARE PAID IN THE CLASSIFICATION WITH THE HIGHEST RATE FOR THAT SHIFT.....$ 103.62 34.69

DIVER: DIVER TENDER DEPTH PAY (SURFACE DIVING): 050 TO 100 FT $2.00 PER FOOT 101 TO 150 FT $3.00 PER FOOT 151 TO 220 FT $4.00 PER FOOT 221 FT.-DEEPER $5.00 PER FOOT SATURATION DIVING: THE STANDBY RATE SHALL APPLY UNTIL SATURATION STARTS. THE SATURATION DIVING RATE APPLIES WHEN DIVERS ARE UNDER PRESSURE CONTINUOUSLY UNTIL WORK TASK AND DECOMPRESSION ARE COMPLETE. THE DIVER RATE SHALL BE PAID FOR ALL SATURATION HOURS. DIVING IN ENCLOSURES: WHERE IT IS NECESSARY FOR DIVERS TO ENTER PIPES OR TUNNELS, OR OTHER ENCLOSURES WHERE THERE IS NO VERTICAL ASCENT, THE FOLLOWING PREMIUM SHALL BE PAID: DISTANCE TRAVELED FROM ENTRANCE 26 FEET TO 300 FEET: $1.00 PER FOOT. WHEN IT IS NECESSARY FOR A DIVER TO ENTER ANY PIPE, TUNNEL OR OTHER ENCLOSURE LESS THAN 48"" IN HEIGHT, THE PREMIUM WILL BE $1.00 PER FOOT. WORK IN COMBINATION OF CLASSIFICATIONS: EMPLOYEES WORKING IN ANY COMBINATION OF CLASSIFICATIONS WITHIN THE DIVING CREW (EXCEPT DIVE SUPERVISOR) IN

A SHIFT ARE PAID IN THE CLASSIFICATION WITH THE HIGHEST RATE FOR THAT SHIFT.....$ 59.51 34.69

DIVER: DIVER STANDBY DEPTH PAY (SURFACE DIVING): 050 TO 100 FT $2.00 PER FOOT 101 TO 150 FT $3.00 PER FOOT 151 TO 220 FT $4.00 PER FOOT 221 FT.-DEEPER $5.00 PER FOOT SATURATION DIVING: THE STANDBY RATE SHALL APPLY UNTIL SATURATION STARTS. THE SATURATION DIVING RATE APPLIES WHEN DIVERS ARE UNDER PRESSURE CONTINUOUSLY UNTIL WORK TASK AND DECOMPRESSION ARE COMPLETE. THE DIVER RATE SHALL BE PAID FOR ALL SATURATION HOURS. DIVING IN ENCLOSURES: WHERE IT IS NECESSARY FOR DIVERS TO ENTER PIPES OR TUNNELS, OR OTHER ENCLOSURES WHERE THERE IS NO VERTICAL ASCENT, THE FOLLOWING PREMIUM SHALL BE PAID: DISTANCE TRAVELED FROM ENTRANCE 26 FEET TO 300 FEET: $1.00 PER FOOT. WHEN IT IS NECESSARY FOR A DIVER TO ENTER ANY PIPE, TUNNEL OR OTHER ENCLOSURE LESS THAN 48"" IN HEIGHT, THE PREMIUM WILL BE $1.00 PER FOOT. WORK IN COMBINATION OF CLASSIFICATIONS: EMPLOYEES WORKING IN ANY COMBINATION OF CLASSIFICATIONS WITHIN THE DIVING CREW (EXCEPT DIVE SUPERVISOR) IN A SHIFT ARE PAID IN THE CLASSIFICATION WITH THE HIGHEST RATE FOR THAT SHIFT.....$ 60.51 34.69

DIVER: ASSISTANT TENDER, ROV TENDER/TECHNICIAN DEPTH PAY (SURFACE DIVING): 050 TO 100 FT $2.00 PER FOOT 101 TO 150 FT $3.00 PER FOOT 151 TO 220 FT $4.00 PER FOOT 221 FT.-DEEPER $5.00 PER FOOT SATURATION DIVING: THE STANDBY RATE SHALL APPLY UNTIL SATURATION STARTS. THE SATURATION DIVING RATE APPLIES WHEN DIVERS ARE UNDER PRESSURE CONTINUOUSLY UNTIL WORK TASK AND DECOMPRESSION ARE COMPLETE. THE DIVER RATE SHALL BE PAID FOR ALL SATURATION HOURS. DIVING IN ENCLOSURES: WHERE IT IS NECESSARY FOR DIVERS TO ENTER PIPES OR TUNNELS, OR OTHER ENCLOSURES WHERE THERE IS NO VERTICAL ASCENT, THE FOLLOWING PREMIUM SHALL BE PAID: DISTANCE TRAVELED FROM ENTRANCE 26 FEET TO 300 FEET: $1.00 PER FOOT. WHEN IT IS NECESSARY FOR A DIVER TO ENTER ANY PIPE, TUNNEL OR OTHER ENCLOSURE LESS THAN 48"" IN HEIGHT, THE PREMIUM WILL BE $1.00 PER FOOT. WORK IN COMBINATION OF CLASSIFICATIONS: EMPLOYEES WORKING IN ANY COMBINATION OF CLASSIFICATIONS WITHIN THE DIVING CREW (EXCEPT DIVE SUPERVISOR) IN A SHIFT ARE PAID IN THE CLASSIFICATION WITH THE HIGHEST RATE FOR THAT SHIFT.....$ 54.10 34.69

CARP0034-003 07/01/2021

	Rates	Fringes
PILEDRIVER	$ 54.10	34.69

CARP0035-001 08/01/2020

	Rates	Fringes
DRYWALL STOCKER/SCRAPPER: (AREA 4)	$ 22.97	18.22
DRYWALL STOCKER/SCRAPPER: (AREA 3)	$ 23.64	18.22
DRYWALL STOCKER/SCRAPPER: (AREA 1)	$ 26.33	18.22
DRYWALL INSTALLERS/LATHERS:: (AREA 4)	$ 45.92	31.26
DRYWALL INSTALLERS/LATHERS:: (AREA 3)	$ 47.27	31.26
DRYWALL INSTALLERS/LATHERS:: (AREA 1)	$ 52.65	31.26

CARP0035-009 07/01/2020

	Rates	Fringes
CARPENTER: MILLWRIGHT MARIN COUNTY	$ 52.75	32.41
CARPENTER: JOURNEYMAN CARPENTER MARIN COUNTY	$ 52.65	30.82
CARPENTER: HARDWOOD FLOORLAYER, SHINGLER, POWER SAW OPERATOR, STEEL SCAFFOLD & STEEL SHORING ERECTOR, SAW FILER MARIN COUNTY	$ 52.80	30.82
CARPENTER: BRIDGE BUILDER/HIGHWAY CARPENTER MARIN COUNTY	$ 52.65	30.82

CARP0035-010 07/01/2020

	Rates	Fringes
MASTER INSTALLER (MODULAR FURNITURE INSTALLER) AREA 3	$ 31.38	23.03
MASTER INSTALLER (MODULAR FURNITURE INSTALLER) AREA 2	$ 32.71	23.03
MASTER INSTALLER (MODULAR FURNITURE INSTALLER) AREA 1	$ 36.43	23.03
LEAD INSTALLER (MODULAR FURNITURE INSTALLER) AREA 3	$ 27.96	23.03
LEAD INSTALLER (MODULAR FURNITURE INSTALLER) AREA 2	$ 29.08	23.03
LEAD INSTALLER (MODULAR FURNITURE INSTALLER) AREA 1	$ 32.21	23.03
INSTALLER (MODULAR FURNITURE INSTALLER) AREA 3	$ 25.16	22.53
INSTALLER (MODULAR FURNITURE INSTALLER) AREA 2	$ 26.11	22.53
INSTALLER (MODULAR FURNITURE INSTALLER) AREA 1	$ 28.76	22.53

CARP0046-001 07/01/2023

	Rates	Fringes
CARPENTERS: MILLWRIGHT EL DORADO (WEST), PLACER (WEST), SACRAMENTO AND YOLO COUNTIES FOOTNOTE: PLACER COUNTY (WEST) INCLUDES TERRITORY WEST OF AND INCLUDING HIGHWAY 49 AND EL DORADO COUNTY (WEST) INCLUDES TERRITORY WEST OF AND INCLUDING HIGHWAY 49 AND TERRITORY INSIDE THE CITY LIMITS OF PLACERVILLE	$ 57.01	35.11
CARPENTERS: JOURNEYMAN CARPENTER EL DORADO (WEST), PLACER (WEST), SACRAMENTO AND YOLO COUNTIES FOOTNOTE: PLACER COUNTY (WEST) INCLUDES TERRITORY WEST OF AND INCLUDING HIGHWAY 49 AND EL DORADO COUNTY (WEST) INCLUDES TERRITORY WEST OF AND INCLUDING HIGHWAY 49 AND TERRITORY INSIDE THE CITY LIMITS OF PLACERVILLE	$ 54.51	33.52
CARPENTERS: HARDWOOD FLOORLAYER, SHINGLER, POWER SAW OPERATOR, STEEL SCAFFOLD & STEEL SHORING ERECTOR, SAW FILER EL DORADO (WEST), PLACER (WEST), SACRAMENTO AND YOLO COUNTIES FOOTNOTE: PLACER COUNTY (WEST) INCLUDES TERRITORY WEST OF AND INCLUDING HIGHWAY 49 AND EL DORADO COUNTY (WEST) INCLUDES TERRITORY WEST OF AND INCLUDING HIGHWAY 49 AND TERRITORY INSIDE THE CITY LIMITS OF PLACERVILLE	$ 54.66	33.52
CARPENTERS: BRIDGE BUILDER/HIGHWAY CARPENTER EL DORADO (WEST), PLACER (WEST), SACRAMENTO AND YOLO COUNTIES FOOTNOTE: PLACER COUNTY (WEST) INCLUDES TERRITORY WEST OF AND INCLUDING HIGHWAY 49 AND EL DORADO COUNTY (WEST) INCLUDES TERRITORY WEST OF AND INCLUDING HIGHWAY 49 AND TERRITORY INSIDE THE CITY LIMITS OF PLACERVILLE	$ 60.39	33.52

CARP0046-002 07/01/2023

	Rates	Fringes
CARPENTERS: MILLWRIGHT ALPINE, COLUSA, EL DORADO (EAST), NEVADA, PLACER (EAST), SIERRA, SUTTER AND YUBA COUNTIES	$ 55.66	35.11

CARPENTERS: JOURNEYMAN CARPENTER ALPINE, COLUSA, EL DORADO (EAST), NEVADA, PLACER (EAST), SIERRA, SUTTER AND YUBA COUNTIES.....$ 53.16 33.52
CARPENTERS: HARDWOOD FLOORLAYER, SHINGLER, POWER SAW OPERATOR, STEEL SCAFFOLD & STEEL SHORING ERECTOR, SAW FILER ALPINE, COLUSA, EL DORADO (EAST), NEVADA, PLACER (EAST), SIERRA, SUTTER AND YUBA COUNTIES.....$ 53.31 33.52
CARPENTERS: BRIDGE BUILDER/HIGHWAY CARPENTER ALPINE, COLUSA, EL DORADO (EAST), NEVADA, PLACER (EAST), SIERRA, SUTTER AND YUBA COUNTIES.....$ 60.39 33.52

CARP0152-003 07/01/2020

	Rates	Fringes
CARPENTERS: MILLWRIGHT AMADOR COUNTY.....	$ 47.92	32.41
CARPENTERS: JOURNEYMAN CARPENTER AMADOR COUNTY....	$ 45.42	30.82
CARPENTERS: HARDWOOD FLOORLAYER, SHINGLER, POWER SAW OPERATOR, STEEL SCAFFOLD & STEEL SHORING ERECTOR, SAW FILER AMADOR COUNTY.....	$ 45.57	30.82
CARPENTERS: BRIDGE BUILDER/HIGHWAY CARPENTER AMADOR COUNTY.....	$ 52.65	30.82

CARP0180-001 07/01/2021

	Rates	Fringes
CARPENTERS: MILLWRIGHT SOLANO COUNTY.....	$ 54.95	33.08
CARPENTERS: JOURNEYMAN CARPENTER SOLANO COUNTY....	$ 54.85	31.49
CARPENTERS: HARDWOOD FLOORLAYER, SHINGLER, POWER SAW OPERATOR, STEEL SCAFFOLD & STEEL SHORING ERECTOR, SAW FILER SOLANO COUNTY.....	$ 55.00	31.49
CARPENTERS: BRIDGE BUILDER/HIGHWAY CARPENTER SOLANO COUNTY.....	$ 54.85	31.49

CARP0751-001 07/01/2021

	Rates	Fringes
CARPENTERS: MILLWRIGHT NAPA AND SONOMA COUNTIES...	$ 54.95	33.08
CARPENTERS: JOURNEYMAN CARPENTER NAPA AND SONOMA COUNTIES.....	$ 54.85	31.49
CARPENTERS: HARDWOOD FLOORLAYER, SHINGLER, POWER SAW OPERATOR, STEEL SCAFFOLD & STEEL SHORING ERECTOR, SAW FILER NAPA AND SONOMA COUNTIES.....	$ 55.00	31.49
CARPENTERS: BRIDGE BUILDER/HIGHWAY CARPENTER NAPA AND SONOMA COUNTIES.....	$ 54.85	31.49

CARP1599-001 07/01/2020

	Rates	Fringes
CARPENTERS: MILLWRIGHT BUTTE, GLENN, LASSEN, MODOC, PLUMAS, SHASTA, SISKIYOU, TEHAMA AND TRINITY COUNTIES.....	$ 47.92	32.41
CARPENTERS: JOURNEYMAN CARPENTER BUTTE, GLENN, LASSEN, MODOC, PLUMAS, SHASTA, SISKIYOU, TEHAMA AND TRINITY COUNTIES.....	$ 45.42	30.82
CARPENTERS: HARDWOOD FLOORLAYER, SHINGLER, POWER SAW OPERATOR, STEEL SCAFFOLD & STEEL SHORING ERECTOR, SAW FILER BUTTE, GLENN, LASSEN, MODOC, PLUMAS, SHASTA, SISKIYOU, TEHAMA AND TRINITY COUNTIES.....	$ 45.57	30.82
CARPENTERS: BRIDGE BUILDER/HIGHWAY CARPENTER BUTTE, GLENN, LASSEN, MODOC, PLUMAS, SHASTA, SISKIYOU, TEHAMA AND TRINITY COUNTIES.....	$ 52.65	30.82

ELEC0180-001 06/01/2025

	Rates	Fringes
ELECTRICIAN NAPA AND SOLANO COUNTIES	$ 61.56	31.13
CABLE SPLICER NAPA AND SOLANO COUNTIES	$ 69.26	31.36

ELEC0180-003 12/01/2025

	Rates	Fringes
SOUND & COMMUNICATIONS: TECHNICIAN NAPA AND SOLANO COUNTIES SCOPE OF WORK INCLUDES- SOUND & VOICE TRANSMISSION (MUSIC, INTERCOM, NURSE CALL, TELEPHONE); FIRE ALARM SYSTEMS [EXCLUDING FIRE ALARM WORK WHEN INSTALLED IN RACEWAYS (INCLUDING WIRE AND CABLE PULLING) AND WHEN PERFORMED ON NEW OR MAJOR REMODEL BUILDING PROJECTS OR JOBS], TELEVISION & VIDEO SYSTEMS, SECURITY SYSTEMS, COMMUNICATIONS SYSTEMS THAT TRANSMIT OR RECEIVE INFORMATION AND/OR CONTROL SYSTEMS THAT ARE INTRINSIC TO THE ABOVE. EXCLUDES- EXCLUDES ALL OTHER DATA SYSTEMS OR MULTIPLE SYSTEMS WHICH INCLUDE CONTROL FUNCTION OR POWER SUPPLY; EXCLUDES INSTALLATION OF RACEWAY SYSTEMS, LINE VOLTAGE WORK, INDUSTRIAL WORK, LIFE-SAFETY SYSTEMS (ALL BUILDINGS HAVING FLOORS LOCATED MORE THAN 75' ABOVE THE LOWEST FLOOR LEVEL HAVING BUILDING ACCESS); EXCLUDES ENERGY MANAGEMENT SYSTEMS	$ 61.04	31.08
SOUND & COMMUNICATIONS: INSTALLER NAPA AND SOLANO COUNTIES SCOPE OF WORK INCLUDES- SOUND & VOICE TRANSMISSION (MUSIC, INTERCOM, NURSE CALL, TELEPHONE); FIRE ALARM SYSTEMS [EXCLUDING FIRE ALARM WORK WHEN INSTALLED IN RACEWAYS (INCLUDING WIRE AND CABLE PULLING) AND WHEN PERFORMED ON NEW OR MAJOR REMODEL BUILDING PROJECTS OR JOBS], TELEVISION & VIDEO SYSTEMS, SECURITY SYSTEMS, COMMUNICATIONS SYSTEMS THAT TRANSMIT OR RECEIVE INFORMATION AND/OR CONTROL SYSTEMS THAT ARE INTRINSIC TO THE ABOVE. EXCLUDES- EXCLUDES ALL OTHER DATA SYSTEMS OR MULTIPLE SYSTEMS WHICH INCLUDE CONTROL FUNCTION OR POWER SUPPLY; EXCLUDES INSTALLATION OF RACEWAY SYSTEMS, LINE VOLTAGE WORK, INDUSTRIAL WORK, LIFE-SAFETY SYSTEMS (ALL BUILDINGS HAVING FLOORS LOCATED MORE THAN 75' ABOVE THE LOWEST FLOOR LEVEL HAVING BUILDING ACCESS); EXCLUDES ENERGY MANAGEMENT SYSTEMS	$ 53.08	30.84

ELEC0340-002 03/01/2025

	Rates	Fringes
COMMUNICATIONS SYSTEM: SOUND & COMMUNICATIONS TECHNICIAN ALPINE, AMADOR, BUTTE, COLUSA, EL DORADO, GLENN, LASSEN, NEVADA, PLACER, PLUMAS, SACRAMENTO, TRINITY, YOLO, YUBA COUNTIES SCOPE OF WORK INCLUDES THE INSTALLATION TESTING, SERVICE AND MAINTENANCE, OF THE FOLLOWING SYSTEMS WHICH UTILIZE THE TRANSMISSION AND/OR TRANSFERENCE OF VOICE, SOUND, VISION AND DIGITAL FOR COMMERCIAL, EDUCATION, SECURITY AND ENTERTAINMENT PURPOSES FOR THE FOLLOWING TV MONITORING AND SURVEILLANCE, BACKGROUND-FOREGROUND MUSIC, INTERCOM AND TELEPHONE INTERCONNECT, INVENTORY CONTROL SYSTEMS, MICROWAVE TRANSMISSION, MULTI-MEDIA, MULTIPLEX, NURSE CALL SYSTEM, RADIO PAGE, SCHOOL INTERCOM AND SOUND, BURGLAR ALARMS, AND LOW VOLTAGE MASTER CLOCK SYSTEMS. A. SOUND AND VOICE TRANSMISSION/TRANSFERENCE SYSTEMS BACKGROUND		

FOREGROUND MUSIC INTERCOM AND TELEPHONE INTERCONNECT SYSTEMS, TELEPHONE SYSTEMS, NURSE CALL SYSTEMS, RADIO PAGE SYSTEMS, SCHOOL INTERCOM AND SOUND SYSTEMS, BURGLAR ALARM SYSTEMS, LOW VOLTAGE MASTER CLOCK SYSTEMS, MULTI-MEDIA/MULTIPLEX SYSTEMS, SOUND AND MUSICAL ENTERTAINMENT SYSTEMS, RF SYSTEMS, ANTENNAS AND WAVE GUIDE. B. FIRE ALARM SYSTEMS INSTALLATION, WIRE PULLING AND TESTING C. TELEVISION AND VIDEO SYSTEMS TELEVISION MONITORING AND SURVEILLANCE SYSTEMS, VIDEO SECURITY SYSTEMS, VIDEO ENTERTAINMENT SYSTEMS, VIDEO EDUCATIONAL SYSTEMS, MICROWAVE TRANSMISSION SYSTEMS, CATV AND CCTV D. SECURITY SYSTEMS PERIMETER SECURITY SYSTEMS VIBRATION SENSOR SYSTEMS CARD ACCESS SYSTEMS ACCESS CONTROL SYSTEMS SONAR/INFRARED MONITORING EQUIPMENT E. COMMUNICATIONS SYSTEMS THAT TRANSMIT OR RECEIVE INFORMATION AND/OR CONTROL SYSTEMS THAT ARE INTRINSIC TO THE ABOVE LISTED SYSTEMS SCADA (SUPERVISORY CONTROL AND DATA ACQUISITION) PCM (PULSE CODE MODULATION) INVENTORY CONTROL SYSTEMS DIGITAL DATA SYSTEMS BROADBAND AND BASEBAND AND CARRIERS POINT OF SALE SYSTEMS VSAT DATA SYSTEMS DATA COMMUNICATION SYSTEMS RF AND REMOTE CONTROL SYSTEMS FIBER OPTIC DATA SYSTEMS WORK EXCLUDED RACEWAY SYSTEMS ARE NOT COVERED (EXCLUDING LADDER-RACK FOR THE PURPOSE OF THE ABOVE LISTED SYSTEMS). CHASES AND/OR NIPPLES (NOT TO EXCEED 10 FEET) MAY BE INSTALLED ON OPEN WIRING SYSTEMS. ENERGY MANAGEMENT SYSTEMS. SCADA (SUPERVISORY CONTROL AND DATA ACQUISITION) WHEN NOT INTRINSIC TO THE ABOVE LISTED SYSTEMS (IN THE SCOPE). FIRE ALARM SYSTEMS WHEN INSTALLED IN RACEWAYS (INCLUDING WIRE AND CABLE PULLING) SHALL BE PERFORMED AT THE ELECTRICIAN WAGE RATE, WHEN EITHER OF THE FOLLOWING TWO (2) CONDITIONS APPLY: 1. THE PROJECT INVOLVES NEW OR MAJOR REMODEL BUILDING TRADES CONSTRUCTION. 2. THE CONDUCTORS FOR THE FIRE ALARM SYSTEM ARE INSTALLED IN CONDUIT.....$ 46.00 25.68

COMMUNICATIONS SYSTEM: SOUND & COMMUNICATIONS INSTALLER ALPINE, AMADOR, BUTTE, COLUSA, EL DORADO, GLENN, LASSEN, NEVADA, PLACER, PLUMAS, SACRAMENTO, TRINITY, YOLO, YUBA COUNTIES SCOPE OF WORK INCLUDES THE INSTALLATION TESTING, SERVICE AND MAINTENANCE, OF THE FOLLOWING SYSTEMS WHICH UTILIZE THE TRANSMISSION AND/OR TRANSFERENCE OF VOICE, SOUND, VISION AND DIGITAL FOR COMMERCIAL, EDUCATION, SECURITY AND ENTERTAINMENT PURPOSES FOR THE FOLLOWING TV MONITORING AND SURVEILLANCE, BACKGROUND-FOREGROUND MUSIC, INTERCOM AND TELEPHONE INTERCONNECT, INVENTORY CONTROL SYSTEMS, MICROWAVE TRANSMISSION, MULTI-MEDIA, MULTIPLEX, NURSE CALL SYSTEM, RADIO PAGE, SCHOOL INTERCOM AND SOUND, BURGLAR ALARMS, AND LOW VOLTAGE MASTER CLOCK SYSTEMS. A. SOUND AND VOICE TRANSMISSION/TRANSFERENCE SYSTEMS BACKGROUND FOREGROUND MUSIC INTERCOM AND TELEPHONE INTERCONNECT SYSTEMS, TELEPHONE SYSTEMS, NURSE CALL SYSTEMS, RADIO PAGE SYSTEMS, SCHOOL INTERCOM AND SOUND SYSTEMS, BURGLAR ALARM SYSTEMS, LOW VOLTAGE MASTER CLOCK SYSTEMS, MULTI-MEDIA/MULTIPLEX SYSTEMS, SOUND AND MUSICAL ENTERTAINMENT SYSTEMS, RF SYSTEMS, ANTENNAS AND WAVE GUIDE. B. FIRE ALARM SYSTEMS INSTALLATION, WIRE PULLING AND

TESTING C. TELEVISION AND VIDEO SYSTEMS TELEVISION MONITORING AND SURVEILLANCE SYSTEMS, VIDEO SECURITY SYSTEMS, VIDEO ENTERTAINMENT SYSTEMS, VIDEO EDUCATIONAL SYSTEMS, MICROWAVE TRANSMISSION SYSTEMS, CATV AND CCTV D. SECURITY SYSTEMS PERIMETER SECURITY SYSTEMS VIBRATION SENSOR SYSTEMS CARD ACCESS SYSTEMS ACCESS CONTROL SYSTEMS SONAR/INFRARED MONITORING EQUIPMENT E. COMMUNICATIONS SYSTEMS THAT TRANSMIT OR RECEIVE INFORMATION AND/OR CONTROL SYSTEMS THAT ARE INTRINSIC TO THE ABOVE LISTED SYSTEMS SCADA (SUPERVISORY CONTROL AND DATA ACQUISITION) PCM (PULSE CODE MODULATION) INVENTORY CONTROL SYSTEMS DIGITAL DATA SYSTEMS BROADBAND AND BASEBAND AND CARRIERS POINT OF SALE SYSTEMS VSAT DATA SYSTEMS DATA COMMUNICATION SYSTEMS RF AND REMOTE CONTROL SYSTEMS FIBER OPTIC DATA SYSTEMS WORK EXCLUDED RACEWAY SYSTEMS ARE NOT COVERED (EXCLUDING LADDER-RACK FOR THE PURPOSE OF THE ABOVE LISTED SYSTEMS). CHASES AND/OR NIPPLES (NOT TO EXCEED 10 FEET) MAY BE INSTALLED ON OPEN WIRING SYSTEMS. ENERGY MANAGEMENT SYSTEMS. SCADA (SUPERVISORY CONTROL AND DATA ACQUISITION) WHEN NOT INTRINSIC TO THE ABOVE LISTED SYSTEMS (IN THE SCOPE). FIRE ALARM SYSTEMS WHEN INSTALLED IN RACEWAYS (INCLUDING WIRE AND CABLE PULLING) SHALL BE PERFORMED AT THE ELECTRICIAN WAGE RATE, WHEN EITHER OF THE FOLLOWING TWO (2) CONDITIONS APPLY: 1. THE PROJECT INVOLVES NEW OR MAJOR REMODEL BUILDING TRADES CONSTRUCTION. 2. THE CONDUCTORS FOR THE FIRE ALARM SYSTEM ARE INSTALLED IN CONDUIT.....$ 40.00 25.50

ELEC0340-003 08/01/2025

	Rates	Fringes
ELECTRICIAN (REMAINING AREA) ALPINE (WEST OF SIERRA MT. WATERSHED), AMADOR, BUTTE, COLUSA, EL DORADO (WEST OF SIERRA MT. WATERSHED), GLENN, LASSEN, NEVADA (WEST OF SIERRA MT. WATERSHED), PLACER, PLUMAS, SACRAMENTO, SHASTA, SIERRA (WEST OF SIERRA MT. WATERSHED), SUTTER, TEHAMA, TRINITY, YOLO & YUBA COUNTIES CABLE SPLICER: RECEIVES 110% OF THE ELECTRICIAN BASIC HOURLY RATE.....	$ 52.70	38.68

ELEC0401-005 01/01/2025

	Rates	Fringes
ELECTRICIAN ALPINE (EAST OF THE MAIN WATERSHED DIVIDE), EL DORADO (EAST OF THE MAIN WATERSHED DIVIDE), NEVADA (EAST OF THE MAIN WATERSHED), PLACER (EAST OF THE MAIN WATERSHED DIVIDE) AND SIERRA (EAST OF THE MAIN WATERSHED DIVIDE) COUNTIES.	$ 48.50	23.04

ELEC0551-004 06/01/2024

	Rates	Fringes
ELECTRICIAN MARIN AND SONOMA COUNTIES.....	$ 59.17	32.04

ELEC0551-005 12/01/2025

	Rates	Fringes
SOUND & COMMUNICATIONS: TECHNICIAN MARIN & SONOMA COUNTIES SCOPE OF WORK INCLUDES- SOUND & VOICE TRANSMISSION (MUSIC, INTERCOM, NURSE CALL,		

TELEPHONE); FIRE ALARM SYSTEMS [EXCLUDING FIRE ALARM WORK WHEN INSTALLED IN RACEWAYS (INCLUDING WIRE AND CABLE PULLING) AND WHEN PERFORMED ON NEW OR MAJOR REMODEL BUILDING PROJECTS OR JOBS], TELEVISION & VIDEO SYSTEMS, SECURITY SYSTEMS, COMMUNICATIONS SYSTEMS THAT TRANSMIT OR RECEIVE INFORMATION AND/OR CONTROL SYSTEMS THAT ARE INTRINSIC TO THE ABOVE. EXCLUDES- EXCLUDES ALL OTHER DATA SYSTEMS OR MULTIPLE SYSTEMS WHICH INCLUDE CONTROL FUNCTION OR POWER SUPPLY; EXCLUDES INSTALLATION OF RACEWAY SYSTEMS, LINE VOLTAGE WORK, INDUSTRIAL WORK, LIFE-SAFETY SYSTEMS (ALL BUILDINGS HAVING FLOORS LOCATED MORE THAN 75' ABOVE THE LOWEST FLOOR LEVEL HAVING BUILDING ACCESS); EXCLUDES ENERGY MANAGEMENT SYSTEMS.....$ 61.04 31.08

SOUND & COMMUNICATIONS: INSTALLER MARIN & SONOMA COUNTIES SCOPE OF WORK INCLUDES- SOUND & VOICE TRANSMISSION (MUSIC, INTERCOM, NURSE CALL, TELEPHONE); FIRE ALARM SYSTEMS [EXCLUDING FIRE ALARM WORK WHEN INSTALLED IN RACEWAYS (INCLUDING WIRE AND CABLE PULLING) AND WHEN PERFORMED ON NEW OR MAJOR REMODEL BUILDING PROJECTS OR JOBS], TELEVISION & VIDEO SYSTEMS, SECURITY SYSTEMS, COMMUNICATIONS SYSTEMS THAT TRANSMIT OR RECEIVE INFORMATION AND/OR CONTROL SYSTEMS THAT ARE INTRINSIC TO THE ABOVE. EXCLUDES- EXCLUDES ALL OTHER DATA SYSTEMS OR MULTIPLE SYSTEMS WHICH INCLUDE CONTROL FUNCTION OR POWER SUPPLY; EXCLUDES INSTALLATION OF RACEWAY SYSTEMS, LINE VOLTAGE WORK, INDUSTRIAL WORK, LIFE-SAFETY SYSTEMS (ALL BUILDINGS HAVING FLOORS LOCATED MORE THAN 75' ABOVE THE LOWEST FLOOR LEVEL HAVING BUILDING ACCESS); EXCLUDES ENERGY MANAGEMENT SYSTEMS.....$ 53.08 30.84

ELEC0659-006 01/01/2026

	Rates	Fringes
ELECTRICIAN MODOC AND SISKIYOU COUNTIES	$ 47.04	21.84

ELEC0659-008 02/01/2023

	Rates	Fringes
LINE CONSTRUCTION: (1) CABLE SPLICER DEL NORTE, MODOC & SISKIYOU COUNTIES	$ 67.80	25.20
LINE CONSTRUCTION: (2) LINEMAN, POLE SPRAYER, HEAVY LINE EQUIPMENT MAN DEL NORTE, MODOC & SISKIYOU COUNTIES	$ 60.54	24.87

ELEC1245-004 01/01/2025

	Rates	Fringes
LINE CONSTRUCTION: (3) GROUNDMAN ALL COUNTIES EXCEPT DEL NORTE, MODOC & SISKIYOU HOLIDAYS: NEW YEAR'S DAY, M.L. KING DAY, MEMORIAL DAY, INDEPENDENCE DAY, LABOR DAY, VETERANS DAY, THANKSGIVING DAY AND DAY AFTER THANKSGIVING, CHRISTMAS DAY	$ 40.76	21.76

LINE CONSTRUCTION: (2) EQUIPMENT SPECIALIST OPERATES CRAWLER TRACTORS, COMMERCIAL MOTOR VEHICLES, BACKHOES, TRENCHERS, CRANES (50 TONS AND BELOW), OVERHEAD & UNDERGROUND DISTRIBUTION LINE EQUIPMENT ALL COUNTIES EXCEPT DEL NORTE, MODOC & SISKIYOU HOLIDAYS: NEW YEAR'S DAY, M.L. KING DAY, MEMORIAL DAY, INDEPENDENCE DAY, LABOR DAY, VETERANS DAY, THANKSGIVING DAY AND DAY AFTER

THANKSGIVING, CHRISTMAS DAY.....$ 53.30 22.26
LINE CONSTRUCTION (1) LINEMAN; CABLE SPLICER
HOLIDAYS: NEW YEAR'S DAY, M.L. KING DAY, MEMORIAL
DAY, INDEPENDENCE DAY, LABOR DAY, VETERANS DAY,
THANKSGIVING DAY AND DAY AFTER THANKSGIVING,
CHRISTMAS DAY ALL COUNTIES EXCEPT DEL NORTE, MODOC
& SISKIYOU.....$ 70.16 24.71

ELEV0008-001 01/01/2025

Rates Fringes
ELEVATOR MECHANIC FOOTNOTE: A. PAID VACATION:
EMPLOYER CONTRIBUTES 8% OF REGULAR HOURLY RATE AS
VACATION PAY CREDIT FOR EMPLOYEES WITH MORE THAN 5
YEARS OF SERVICE, AND 6% FOR 6 MONTHS TO 5 YEARS OF
SERVICE. B. PAID HOLIDAYS: NEW YEAR'S DAY,
MEMORIAL DAY, INDEPENDENCE DAY, LABOR DAY,
VETERANS' DAY, THANKSGIVING DAY, FRIDAY AFTER
THANKSGIVING, AND CHRISTMAS DAY.....$ 84.05 38.44

ENGI0003-008 08/01/2024

Rates Fringes
DREDGING (CLAMSHELL & DIPPER DREDGING; HYDRAULIC
SUCTION DREDGING) AREA 2: (4) BARGEMAN; DECKHAND;
FIREMAN; LEVEEHAND; OILER AREA DESCRIPTIONS
AREA 1: ALAMEDA,BUTTE, CONTRA COSTA, KINGS, MARIN,
MERCED, NAPA, SACRAMENTO, SAN BENITO, SAN
FRANCISCO, SAN JOAQUIN, SAN MATEO, SANTA CLARA,
SANTA CRUZ, SOLANO, STANISLAUS, SUTTER, YOLO, AND
YUBA COUNTIES AREA 2: MODOC COUNTY THE
REMAINGING COUNTIES ARE SPLIT BETWEEN AREA 1 AND
AREA 2 AS NOTED BELOW: ALPINE COUNTY: AREA 1:
NORTHERNMOST PART AREA 2: REMAINDER CALAVERAS
COUNTY: AREA 1: REMAINDER AREA 2: EASTERN PART
COLUSA COUNTY: AREA 1: EASTERN PART AREA 2:
REMAINDER ELDORADO COUNTY: AREA 1: NORTH CENTRAL
PART AREA 2: REMAINDER FRESNO COUNTY: AREA
1: REMAINDER AREA 2: EASTERN PART GLENN
COUNTY: AREA 1: EASTERN PART AREA 2: REMAINDER
LASSEN COUNTY: AREA 1: WESTERN PART ALONG THE
SOUTHERN PORTION OF BORDER WITH SHASTA COUNTY AREA
2: REMAINDER MADERA COUNTY: AREA 1: EXCEPT
EASTERN PART AREA 2: EASTERN PART MARIPOSA
COUNTY AREA 1: EXCEPT EASTERN PART AREA 2:
EASTERN PART MONTERREY COUNTY AREA 1: EXCEPT
SOUTHWESTERN PART AREA 2: SOUTHWESTERN PART
NEVADA COUNTY: AREA 1: ALL BUT THE NORTHERN
PORTION ALONG THE BORDER OF SIERRA COUNTY AREA 2:
REMAINDER PLACER COUNTY: AREA 1: AL BUT THE
CENTRAL PORTION AREA 2: REMAINDER PLUMAS COUNTY:
AREA 1: WESTERN PORTION AREA 2: REMAINDER
SHASTA COUNTY: AREA 1: ALL BUT THE NORTHEASTERN
CORNER AREA 2: REMAINDER SIERRA COUNTY: AREA 1:
WESTERN PART AREA 2: REMAINDER SISKIYOU COUNTY:
AREA 1: CENTRAL PART AREA 2: REMAINDER SONOMA
COUNTY: AREA 1: ALL BUT THE NORTHWESTERN CORNER
AREA 2: REMAINDER TEHAMA COUNTY: AREA 1: ALL
BUT THE WESTERN BORDER WITH MENDOCINO & TRINITY
COUNTIES AREA 2: REMAINDER TRINITY COUNTY: AREA
1: EAST CENTRAL PART AND THE NORTHEASTERN BORDER
WITH SHASTA COUNTY AREA 2: REMAINDER TUOLUMNE
COUNTY: AREA 1: EXCEPT EASTERN PART AREA 2:
EASTERN PART.....$ 53.23 39.55
DREDGING (CLAMSHELL & DIPPER DREDGING; HYDRAULIC

SUCTION DREDGING) AREA 2: (3) BOOSTER PUMP OPERATOR; DECK ENGINEER; DECK MATE; DREDGE TENDER; WINCH OPERATOR AREA DESCRIPTIONS AREA 1: ALAMEDA,BUTTE, CONTRA COSTA, KINGS, MARIN, MERCED, NAPA, SACRAMENTO, SAN BENITO, SAN FRANCISCO, SAN JOAQUIN, SAN MATEO, SANTA CLARA, SANTA CRUZ, SOLANO, STANISLAUS, SUTTER, YOLO, AND YUBA COUNTIES AREA 2: MODOC COUNTY THE REMAINGING COUNTIES ARE SPLIT BETWEEN AREA 1 AND AREA 2 AS NOTED BELOW: ALPINE COUNTY: AREA 1: NORTHERNMOST PART AREA 2: REMAINDER CALAVERAS COUNTY: AREA 1: REMAINDER AREA 2: EASTERN PART COLUSA COUNTY: AREA 1: EASTERN PART AREA 2: REMAINDER ELDORADO COUNTY: AREA 1: NORTH CENTRAL PART AREA 2: REMAINDER FRESNO COUNTY: AREA 1: REMAINDER AREA 2: EASTERN PART GLENN COUNTY: AREA 1: EASTERN PART AREA 2: REMAINDER LASSEN COUNTY: AREA 1: WESTERN PART ALONG THE SOUTHERN PORTION OF BORDER WITH SHASTA COUNTY AREA 2: REMAINDER MADERA COUNTY: AREA 1: EXCEPT EASTERN PART AREA 2: EASTERN PART MARIPOSA COUNTY AREA 1: EXCEPT EASTERN PART AREA 2: EASTERN PART MONTERREY COUNTY AREA 1: EXCEPT SOUTHWESTERN PART AREA 2: SOUTHWESTERN PART NEVADA COUNTY: AREA 1: ALL BUT THE NORTHERN PORTION ALONG THE BORDER OF SIERRA COUNTY AREA 2: REMAINDER PLACER COUNTY: AREA 1: AL BUT THE CENTRAL PORTION AREA 2: REMAINDER PLUMAS COUNTY: AREA 1: WESTERN PORTION AREA 2: REMAINDER SHASTA COUNTY: AREA 1: ALL BUT THE NORTHEASTERN CORNER AREA 2: REMAINDER SIERRA COUNTY: AREA 1: WESTERN PART AREA 2: REMAINDER SISKIYOU COUNTY: AREA 1: CENTRAL PART AREA 2: REMAINDER SONOMA COUNTY: AREA 1: ALL BUT THE NORTHWESTERN CORNER AREA 2: REMAINDER TEHAMA COUNTY: AREA 1: ALL BUT THE WESTERN BORDER WITH MENDOCINO & TRINITY COUNTIES AREA 2: REMAINDER TRINITY COUNTY: AREA 1: EAST CENTRAL PART AND THE NORTHEASTERN BORDER WITH SHASTA COUNTY AREA 2: REMAINDER TUOLUMNE COUNTY: AREA 1: EXCEPT EASTERN PART AREA 2: EASTERN PART.....$ 56.53 39.55

DREDGING (CLAMSHELL & DIPPER DREDGING; HYDRAULIC SUCTION DREDGING) AREA 2: (2) DREDGE DOZER; HEAVY DUTY REPAIRMAN : AREA DESCRIPTIONS AREA 1: ALAMEDA,BUTTE, CONTRA COSTA, KINGS, MARIN, MERCED, NAPA, SACRAMENTO, SAN BENITO, SAN FRANCISCO, SAN JOAQUIN, SAN MATEO, SANTA CLARA, SANTA CRUZ, SOLANO, STANISLAUS, SUTTER, YOLO, AND YUBA COUNTIES AREA 2: MODOC COUNTY THE REMAINGING COUNTIES ARE SPLIT BETWEEN AREA 1 AND AREA 2 AS NOTED BELOW: ALPINE COUNTY: AREA 1: NORTHERNMOST PART AREA 2: REMAINDER CALAVERAS COUNTY: AREA 1: REMAINDER AREA 2: EASTERN PART COLUSA COUNTY: AREA 1: EASTERN PART AREA 2: REMAINDER ELDORADO COUNTY: AREA 1: NORTH CENTRAL PART AREA 2: REMAINDER FRESNO COUNTY: AREA 1: REMAINDER AREA 2: EASTERN PART GLENN COUNTY: AREA 1: EASTERN PART AREA 2: REMAINDER LASSEN COUNTY: AREA 1: WESTERN PART ALONG THE SOUTHERN PORTION OF BORDER WITH SHASTA COUNTY AREA 2: REMAINDER MADERA COUNTY: AREA 1: EXCEPT EASTERN PART AREA 2: EASTERN PART MARIPOSA COUNTY AREA 1: EXCEPT EASTERN PART AREA 2: EASTERN PART MONTERREY COUNTY AREA 1: EXCEPT SOUTHWESTERN PART AREA 2: SOUTHWESTERN PART NEVADA COUNTY: AREA 1: ALL

BUT THE NORTHERN PORTION ALONG THE BORDER OF SIERRA COUNTY AREA 2: REMAINDER PLACER COUNTY: AREA 1: AL BUT THE CENTRAL PORTION AREA 2: REMAINDER PLUMAS COUNTY: AREA 1: WESTERN PORTION AREA 2: REMAINDER SHASTA COUNTY: AREA 1: ALL BUT THE NORTHEASTERN CORNER AREA 2: REMAINDER SIERRA COUNTY: AREA 1: WESTERN PART AREA 2: REMAINDER SISKIYOU COUNTY: AREA 1: CENTRAL PART AREA 2: REMAINDER SONOMA COUNTY: AREA 1: ALL BUT THE NORTHWESTERN CORNER AREA 2: REMAINDER TEHAMA COUNTY: AREA 1: ALL BUT THE WESTERN BORDER WITH MENDOCINO & TRINITY COUNTIES AREA 2: REMAINDER TRINITY COUNTY: AREA 1: EAST CENTRAL PART AND THE NORTHEASTERN BORDER WITH SHASTA COUNTY AREA 2: REMAINDER TUOLUMNE COUNTY: AREA 1: EXCEPT EASTERN PART AREA 2: EASTERN PART.....$ 57.65 39.55

DREDGING (CLAMSHELL & DIPPER DREDGING; HYDRAULIC SUCTION DREDGING) AREA 2: (1) LEVERMAN AREA DESCRIPTIONS AREA 1: ALAMEDA,BUTTE, CONTRA COSTA, KINGS, MARIN, MERCED, NAPA, SACRAMENTO, SAN BENITO, SAN FRANCISCO, SAN JOAQUIN, SAN MATEO, SANTA CLARA, SANTA CRUZ, SOLANO, STANISLAUS, SUTTER, YOLO, AND YUBA COUNTIES AREA 2: MODOC COUNTY THE REMAINGING COUNTIES ARE SPLIT BETWEEN AREA 1 AND AREA 2 AS NOTED BELOW: ALPINE COUNTY: AREA 1: NORTHERNMOST PART AREA 2: REMAINDER CALAVERAS COUNTY: AREA 1: REMAINDER AREA 2: EASTERN PART COLUSA COUNTY: AREA 1: EASTERN PART AREA 2: REMAINDER ELDORADO COUNTY: AREA 1: NORTH CENTRAL PART AREA 2: REMAINDER FRESNO COUNTY: AREA 1: REMAINDER AREA 2: EASTERN PART GLENN COUNTY: AREA 1: EASTERN PART AREA 2: REMAINDER LASSEN COUNTY: AREA 1: WESTERN PART ALONG THE SOUTHERN PORTION OF BORDER WITH SHASTA COUNTY AREA 2: REMAINDER MADERA COUNTY: AREA 1: EXCEPT EASTERN PART AREA 2: EASTERN PART MARIPOSA COUNTY AREA 1: EXCEPT EASTERN PART AREA 2: EASTERN PART MONTERREY COUNTY AREA 1: EXCEPT SOUTHWESTERN PART AREA 2: SOUTHWESTERN PART NEVADA COUNTY: AREA 1: ALL BUT THE NORTHERN PORTION ALONG THE BORDER OF SIERRA COUNTY AREA 2: REMAINDER PLACER COUNTY: AREA 1: AL BUT THE CENTRAL PORTION AREA 2: REMAINDER PLUMAS COUNTY: AREA 1: WESTERN PORTION AREA 2: REMAINDER SHASTA COUNTY: AREA 1: ALL BUT THE NORTHEASTERN CORNER AREA 2: REMAINDER SIERRA COUNTY: AREA 1: WESTERN PART AREA 2: REMAINDER SISKIYOU COUNTY: AREA 1: CENTRAL PART AREA 2: REMAINDER SONOMA COUNTY: AREA 1: ALL BUT THE NORTHWESTERN CORNER AREA 2: REMAINDER TEHAMA COUNTY: AREA 1: ALL BUT THE WESTERN BORDER WITH MENDOCINO & TRINITY COUNTIES AREA 2: REMAINDER TRINITY COUNTY: AREA 1: EAST CENTRAL PART AND THE NORTHEASTERN BORDER WITH SHASTA COUNTY AREA 2: REMAINDER TUOLUMNE COUNTY: AREA 1: EXCEPT EASTERN PART AREA 2: EASTERN PART.....$ 62.61 39.55

DREDGING (CLAMSHELL & DIPPER DREDGING; HYDRAULIC SUCTION DREDGING) AREA 1: (4) BARGEMAN; DECKHAND; FIREMAN; LEVEEHAND; OILER AREA DESCRIPTIONS AREA 1: ALAMEDA,BUTTE, CONTRA COSTA, KINGS, MARIN, MERCED, NAPA, SACRAMENTO, SAN BENITO, SAN FRANCISCO, SAN JOAQUIN, SAN MATEO, SANTA CLARA, SANTA CRUZ, SOLANO, STANISLAUS, SUTTER, YOLO, AND YUBA COUNTIES AREA 2: MODOC COUNTY THE REMAINGING COUNTIES ARE SPLIT BETWEEN AREA 1 AND

AREA 2 AS NOTED BELOW: ALPINE COUNTY: AREA 1: NORTHERNMOST PART AREA 2: REMAINDER CALAVERAS COUNTY: AREA 1: REMAINDER AREA 2: EASTERN PART COLUSA COUNTY: AREA 1: EASTERN PART AREA 2: REMAINDER ELDORADO COUNTY: AREA 1: NORTH CENTRAL PART AREA 2: REMAINDER FRESNO COUNTY: AREA 1: REMAINDER AREA 2: EASTERN PART GLENN COUNTY: AREA 1: EASTERN PART AREA 2: REMAINDER LASSEN COUNTY: AREA 1: WESTERN PART ALONG THE SOUTHERN PORTION OF BORDER WITH SHASTA COUNTY AREA 2: REMAINDER MADERA COUNTY: AREA 1: EXCEPT EASTERN PART AREA 2: EASTERN PART MARIPOSA COUNTY AREA 1: EXCEPT EASTERN PART AREA 2: EASTERN PART MONTERREY COUNTY AREA 1: EXCEPT SOUTHWESTERN PART AREA 2: SOUTHWESTERN PART NEVADA COUNTY: AREA 1: ALL BUT THE NORTHERN PORTION ALONG THE BORDER OF SIERRA COUNTY AREA 2: REMAINDER PLACER COUNTY: AREA 1: AL BUT THE CENTRAL PORTION AREA 2: REMAINDER PLUMAS COUNTY: AREA 1: WESTERN PORTION AREA 2: REMAINDER SHASTA COUNTY: AREA 1: ALL BUT THE NORTHEASTERN CORNER AREA 2: REMAINDER SIERRA COUNTY: AREA 1: WESTERN PART AREA 2: REMAINDER SISKIYOU COUNTY: AREA 1: CENTRAL PART AREA 2: REMAINDER SONOMA COUNTY: AREA 1: ALL BUT THE NORTHWESTERN CORNER AREA 2: REMAINDER TEHAMA COUNTY: AREA 1: ALL BUT THE WESTERN BORDER WITH MENDOCINO & TRINITY COUNTIES AREA 2: REMAINDER TRINITY COUNTY: AREA 1: EAST CENTRAL PART AND THE NORTHEASTERN BORDER WITH SHASTA COUNTY AREA 2: REMAINDER TUOLUMNE COUNTY: AREA 1: EXCEPT EASTERN PART AREA 2: EASTERN PART.....$ 51.23 39.55

DREDGING (CLAMSHELL & DIPPER DREDGING; HYDRAULIC SUCTION DREDGING) AREA 1: (3) BOOSTER PUMP OPERATOR; DECK ENGINEER; DECK MATE; DREDGE TENDER; WINCH OPERATOR AREA DESCRIPTIONS AREA 1: ALAMEDA,BUTTE, CONTRA COSTA, KINGS, MARIN, MERCED, NAPA, SACRAMENTO, SAN BENITO, SAN FRANCISCO, SAN JOAQUIN, SAN MATEO, SANTA CLARA, SANTA CRUZ, SOLANO, STANISLAUS, SUTTER, YOLO, AND YUBA COUNTIES AREA 2: MODOC COUNTY THE REMAINGING COUNTIES ARE SPLIT BETWEEN AREA 1 AND AREA 2 AS NOTED BELOW: ALPINE COUNTY: AREA 1: NORTHERNMOST PART AREA 2: REMAINDER CALAVERAS COUNTY: AREA 1: REMAINDER AREA 2: EASTERN PART COLUSA COUNTY: AREA 1: EASTERN PART AREA 2: REMAINDER ELDORADO COUNTY: AREA 1: NORTH CENTRAL PART AREA 2: REMAINDER FRESNO COUNTY: AREA 1: REMAINDER AREA 2: EASTERN PART GLENN COUNTY: AREA 1: EASTERN PART AREA 2: REMAINDER LASSEN COUNTY: AREA 1: WESTERN PART ALONG THE SOUTHERN PORTION OF BORDER WITH SHASTA COUNTY AREA 2: REMAINDER MADERA COUNTY: AREA 1: EXCEPT EASTERN PART AREA 2: EASTERN PART MARIPOSA COUNTY AREA 1: EXCEPT EASTERN PART AREA 2: EASTERN PART MONTERREY COUNTY AREA 1: EXCEPT SOUTHWESTERN PART AREA 2: SOUTHWESTERN PART NEVADA COUNTY: AREA 1: ALL BUT THE NORTHERN PORTION ALONG THE BORDER OF SIERRA COUNTY AREA 2: REMAINDER PLACER COUNTY: AREA 1: AL BUT THE CENTRAL PORTION AREA 2: REMAINDER PLUMAS COUNTY: AREA 1: WESTERN PORTION AREA 2: REMAINDER SHASTA COUNTY: AREA 1: ALL BUT THE NORTHEASTERN CORNER AREA 2: REMAINDER SIERRA COUNTY: AREA 1: WESTERN PART AREA 2: REMAINDER SISKIYOU COUNTY:

AREA 1: CENTRAL PART AREA 2: REMAINDER SONOMA COUNTY: AREA 1: ALL BUT THE NORTHWESTERN CORNER AREA 2: REMAINDER TEHAMA COUNTY: AREA 1: ALL BUT THE WESTERN BORDER WITH MENDOCINO & TRINITY COUNTIES AREA 2: REMAINDER TRINITY COUNTY: AREA 1: EAST CENTRAL PART AND THE NORTHEASTERN BORDER WITH SHASTA COUNTY AREA 2: REMAINDER TUOLUMNE COUNTY: AREA 1: EXCEPT EASTERN PART AREA 2: EASTERN PART.....$ 54.53 39.55

DREDGING (CLAMSHELL & DIPPER DREDGING; HYDRAULIC SUCTION DREDGING) AREA 1: (1) LEVERMAN AREA DESCRIPTIONS AREA 1: ALAMEDA,BUTTE, CONTRA COSTA, KINGS, MARIN, MERCED, NAPA, SACRAMENTO, SAN BENITO, SAN FRANCISCO, SAN JOAQUIN, SAN MATEO, SANTA CLARA, SANTA CRUZ, SOLANO, STANISLAUS, SUTTER, YOLO, AND YUBA COUNTIES AREA 2: MODOC COUNTY THE REMAINGING COUNTIES ARE SPLIT BETWEEN AREA 1 AND AREA 2 AS NOTED BELOW: ALPINE COUNTY: AREA 1: NORTHERNMOST PART AREA 2: REMAINDER CALAVERAS COUNTY: AREA 1: REMAINDER AREA 2: EASTERN PART COLUSA COUNTY: AREA 1: EASTERN PART AREA 2: REMAINDER ELDORADO COUNTY: AREA 1: NORTH CENTRAL PART AREA 2: REMAINDER FRESNO COUNTY: AREA 1: REMAINDER AREA 2: EASTERN PART GLENN COUNTY: AREA 1: EASTERN PART AREA 2: REMAINDER LASSEN COUNTY: AREA 1: WESTERN PART ALONG THE SOUTHERN PORTION OF BORDER WITH SHASTA COUNTY AREA 2: REMAINDER MADERA COUNTY: AREA 1: EXCEPT EASTERN PART AREA 2: EASTERN PART MARIPOSA COUNTY AREA 1: EXCEPT EASTERN PART AREA 2: EASTERN PART MONTERREY COUNTY AREA 1: EXCEPT SOUTHWESTERN PART AREA 2: SOUTHWESTERN PART NEVADA COUNTY: AREA 1: ALL BUT THE NORTHERN PORTION ALONG THE BORDER OF SIERRA COUNTY AREA 2: REMAINDER PLACER COUNTY: AREA 1: AL BUT THE CENTRAL PORTION AREA 2: REMAINDER PLUMAS COUNTY: AREA 1: WESTERN PORTION AREA 2: REMAINDER SHASTA COUNTY: AREA 1: ALL BUT THE NORTHEASTERN CORNER AREA 2: REMAINDER SIERRA COUNTY: AREA 1: WESTERN PART AREA 2: REMAINDER SISKIYOU COUNTY: AREA 1: CENTRAL PART AREA 2: REMAINDER SONOMA COUNTY: AREA 1: ALL BUT THE NORTHWESTERN CORNER AREA 2: REMAINDER TEHAMA COUNTY: AREA 1: ALL BUT THE WESTERN BORDER WITH MENDOCINO & TRINITY COUNTIES AREA 2: REMAINDER TRINITY COUNTY: AREA 1: EAST CENTRAL PART AND THE NORTHEASTERN BORDER WITH SHASTA COUNTY AREA 2: REMAINDER TUOLUMNE COUNTY: AREA 1: EXCEPT EASTERN PART AREA 2: EASTERN PART.....$ 60.61 39.55

DREDGING (CLAMSHELL & DIPPER DREDGING; HYDRAULIC SUCTION DREDGING) AREA 1: (2) DREDGE DOZER; HEAVY DUTY REPAIRMAN AREA DESCRIPTIONS AREA 1: ALAMEDA,BUTTE, CONTRA COSTA, KINGS, MARIN, MERCED, NAPA, SACRAMENTO, SAN BENITO, SAN FRANCISCO, SAN JOAQUIN, SAN MATEO, SANTA CLARA, SANTA CRUZ, SOLANO, STANISLAUS, SUTTER, YOLO, AND YUBA COUNTIES AREA 2: MODOC COUNTY THE REMAINGING COUNTIES ARE SPLIT BETWEEN AREA 1 AND AREA 2 AS NOTED BELOW: ALPINE COUNTY: AREA 1: NORTHERNMOST PART AREA 2: REMAINDER CALAVERAS COUNTY: AREA 1: REMAINDER AREA 2: EASTERN PART COLUSA COUNTY: AREA 1: EASTERN PART AREA 2: REMAINDER ELDORADO COUNTY: AREA 1: NORTH CENTRAL PART AREA 2: REMAINDER FRESNO COUNTY: AREA 1: REMAINDER AREA 2: EASTERN PART GLENN COUNTY: AREA 1:

EASTERN PART AREA 2: REMAINDER LASSEN COUNTY: AREA 1: WESTERN PART ALONG THE SOUTHERN PORTION OF BORDER WITH SHASTA COUNTY AREA 2: REMAINDER MADERA COUNTY: AREA 1: EXCEPT EASTERN PART AREA 2: EASTERN PART MARIPOSA COUNTY AREA 1: EXCEPT EASTERN PART AREA 2: EASTERN PART MONTERREY COUNTY AREA 1: EXCEPT SOUTHWESTERN PART AREA 2: SOUTHWESTERN PART NEVADA COUNTY: AREA 1: ALL BUT THE NORTHERN PORTION ALONG THE BORDER OF SIERRA COUNTY AREA 2: REMAINDER PLACER COUNTY: AREA 1: AL BUT THE CENTRAL PORTION AREA 2: REMAINDER PLUMAS COUNTY: AREA 1: WESTERN PORTION AREA 2: REMAINDER SHASTA COUNTY: AREA 1: ALL BUT THE NORTHEASTERN CORNER AREA 2: REMAINDER SIERRA COUNTY: AREA 1: WESTERN PART AREA 2: REMAINDER SISKIYOU COUNTY: AREA 1: CENTRAL PART AREA 2: REMAINDER SONOMA COUNTY: AREA 1: ALL BUT THE NORTHWESTERN CORNER AREA 2: REMAINDER TEHAMA COUNTY: AREA 1: ALL BUT THE WESTERN BORDER WITH MENDOCINO & TRINITY COUNTIES AREA 2: REMAINDER TRINITY COUNTY: AREA 1: EAST CENTRAL PART AND THE NORTHEASTERN BORDER WITH SHASTA COUNTY AREA 2: REMAINDER TUOLUMNE COUNTY: AREA 1: EXCEPT EASTERN PART AREA 2: EASTERN PART.....$ 55.65 39.55

ENGI0003-019 06/30/2025

	Rates	Fringes
OPERATOR: POWER EQUIPMENT, LANDSCAPE WORK ONLY: GROUP 3 (AREA 2)	$ 49.64	28.56
OPERATOR: POWER EQUIPMENT, LANDSCAPE WORK ONLY: GROUP 3 (AREA 1)	$ 47.64	28.56
OPERATOR: POWER EQUIPMENT, LANDSCAPE WORK ONLY: GROUP 2 (AREA 2)	$ 54.25	28.56
OPERATOR: POWER EQUIPMENT, LANDSCAPE WORK ONLY: GROUP 2 (AREA 1)	$ 52.25	28.56
OPERATOR: POWER EQUIPMENT, LANDSCAPE WORK ONLY: GROUP 1 (AREA 2)	$ 57.85	28.56
OPERATOR: POWER EQUIPMENT, LANDSCAPE WORK ONLY: GROUP 1 (AREA 1)	$ 55.85	28.56

ENGI0003-038 06/29/2020

	Rates	Fringes
OPERATOR: POWER EQUIPMENT, PILEDRIVING - AREA 1:: GROUP 6	$ 42.50	31.15
OPERATOR: POWER EQUIPMENT, PILEDRIVING - AREA 1:: GROUP 5	$ 44.73	31.15
OPERATOR: POWER EQUIPMENT, PILEDRIVING - AREA 1:: GROUP 4	$ 47.37	31.15
OPERATOR: POWER EQUIPMENT, PILEDRIVING - AREA 1:: GROUP 3 (Truck Crane Oiler)	$ 45.12	31.15
OPERATOR: POWER EQUIPMENT, PILEDRIVING - AREA 1:: GROUP 3 (Oiler)	$ 42.89	31.15
OPERATOR: POWER EQUIPMENT, PILEDRIVING - AREA 1:: GROUP 3 (Lifting devices)	$ 49.14	31.15
OPERATOR: POWER EQUIPMENT, PILEDRIVING - AREA 1:: GROUP 2 (Truck Crane Oiler)	$ 45.41	31.15
OPERATOR: POWER EQUIPMENT, PILEDRIVING - AREA 1:: GROUP 2 (Oiler)	$ 43.11	31.15
OPERATOR: POWER EQUIPMENT, PILEDRIVING - AREA 1:: GROUP 2 (Lifting devices)	$ 50.82	31.15
OPERATOR: POWER EQUIPMENT, PILEDRIVING - AREA 1:: GROUP 1 (Truck Crane Oiler)	$ 45.66	31.15
OPERATOR: POWER EQUIPMENT, PILEDRIVING - AREA 1::		

GROUP 1 (Oiler).....$ 43.38 31.15
OPERATOR: POWER EQUIPMENT, PILEDRIVING - AREA 1::
GROUP 1 (Lifting devices).....$ 52.64 31.15
OPERATOR: POWER EQUIPMENT, TUNNEL AND UNDERGROUND
WORK - AREA 1:: UNDERGROUND: (GROUP 5).....$ 58.09 32.53
OPERATOR: POWER EQUIPMENT, TUNNEL AND UNDERGROUND
WORK - AREA 1:: UNDERGROUND: (GROUP 4).....$ 59.23 32.53
OPERATOR: POWER EQUIPMENT, TUNNEL AND UNDERGROUND
WORK - AREA 1:: UNDERGROUND: (GROUP 3).....$ 60.37 32.53
OPERATOR: POWER EQUIPMENT, TUNNEL AND UNDERGROUND
WORK - AREA 1:: UNDERGROUND: (GROUP 2).....$ 61.70 32.53
OPERATOR: POWER EQUIPMENT, TUNNEL AND UNDERGROUND
WORK - AREA 1:: UNDERGROUND: (GROUP 1-A).....$ 65.43 32.53
OPERATOR: POWER EQUIPMENT, TUNNEL AND UNDERGROUND
WORK - AREA 1:: UNDERGROUND: (GROUP 1).....$ 62.96 32.53
OPERATOR: POWER EQUIPMENT, TUNNEL AND UNDERGROUND
WORK - AREA 1:: SHAFTS, STOPES, RAISES: (GROUP 5)...$ 58.19 32.53
OPERATOR: POWER EQUIPMENT, TUNNEL AND UNDERGROUND
WORK - AREA 1:: SHAFTS, STOPES, RAISES: (GROUP 4)...$ 59.33 32.53
OPERATOR: POWER EQUIPMENT, TUNNEL AND UNDERGROUND
WORK - AREA 1:: SHAFTS, STOPES, RAISES: (GROUP 3)...$ 60.47 32.53
OPERATOR: POWER EQUIPMENT, TUNNEL AND UNDERGROUND
WORK - AREA 1:: SHAFTS, STOPES, RAISES: (GROUP 2)...$ 61.80 32.53
OPERATOR: POWER EQUIPMENT, TUNNEL AND UNDERGROUND
WORK - AREA 1:: SHAFTS, STOPES, RAISES: (GROUP 1-A).$ 65.53 32.53
OPERATOR: POWER EQUIPMENT, TUNNEL AND UNDERGROUND
WORK - AREA 1:: SHAFTS, STOPES, RAISES: (GROUP 1)...$ 63.06 32.53
OPERATOR: POWER EQUIPMENT, STEEL ERECTION - AREA
1:: GROUP 5.....$ 62.24 32.53
OPERATOR: POWER EQUIPMENT, STEEL ERECTION - AREA
1:: GROUP 4.....$ 63.54 32.53
OPERATOR: POWER EQUIPMENT, STEEL ERECTION - AREA
1:: GROUP 3.....$ 65.56 32.53
OPERATOR: POWER EQUIPMENT, STEEL ERECTION - AREA
1:: GROUP 2.....$ 67.04 32.53
OPERATOR: POWER EQUIPMENT, STEEL ERECTION - AREA
1:: GROUP 1.....$ 68.81 32.53
OPERATOR: POWER EQUIPMENT, CRANES AND ATTACHMENTS
- AREA 1:: GROUP 4.....$ 61.30 32.53
OPERATOR: POWER EQUIPMENT, CRANES AND ATTACHMENTS
- AREA 1:: GROUP 3 (Hydraulic).....$ 60.61 32.53
OPERATOR: POWER EQUIPMENT, CRANES AND ATTACHMENTS
- AREA 1:: GROUP 3 (Cranes).....$ 64.34 32.53
OPERATOR: POWER EQUIPMENT, CRANES AND ATTACHMENTS
- AREA 1:: GROUP 2.....$ 66.08 32.53
OPERATOR: POWER EQUIPMENT, CRANES AND ATTACHMENTS
- AREA 1:: GROUP 1.....$ 68.59 32.53
OPERATOR: POWER EQUIPMENT, AREA 1:: GROUP 8-A.....$ 55.49 32.53
OPERATOR: POWER EQUIPMENT, AREA 1:: GROUP 8.....$ 57.70 32.53
OPERATOR: POWER EQUIPMENT, AREA 1:: GROUP 7.....$ 58.84 32.53
OPERATOR: POWER EQUIPMENT, AREA 1:: GROUP 6.....$ 59.98 32.53
OPERATOR: POWER EQUIPMENT, AREA 1:: GROUP 5.....$ 61.30 32.53
OPERATOR: POWER EQUIPMENT, AREA 1:: GROUP 4.....$ 62.57 32.53
OPERATOR: POWER EQUIPMENT, AREA 1:: GROUP 3.....$ 63.95 32.53
OPERATOR: POWER EQUIPMENT, AREA 1:: GROUP 2.....$ 65.43 32.53
OPERATOR: POWER EQUIPMENT, AREA 1:: GROUP 1.....$ 66.96 32.53

ENGI0003-038 06/30/2025

	Rates	Fringes
OPERATOR: POWER EQUIPMENT, PILEDRIVING - AREA 1:: GROUP 6	$ 42.50	31.15
OPERATOR: POWER EQUIPMENT, PILEDRIVING - AREA 1:: GROUP 5	$ 44.73	31.15
OPERATOR: POWER EQUIPMENT, PILEDRIVING - AREA 1::		

GROUP 4.....$ 47.37 31.15
OPERATOR: POWER EQUIPMENT, PILEDRIVING - AREA 1::
GROUP 3 (Truck Crane Oiler).....$ 45.12 31.15
OPERATOR: POWER EQUIPMENT, PILEDRIVING - AREA 1::
GROUP 3 (Oiler).....$ 42.89 31.15
OPERATOR: POWER EQUIPMENT, PILEDRIVING - AREA 1::
GROUP 3 (Lifting devices).....$ 49.14 31.15
OPERATOR: POWER EQUIPMENT, PILEDRIVING - AREA 1::
GROUP 2 (Truck Crane Oiler).....$ 45.41 31.15
OPERATOR: POWER EQUIPMENT, PILEDRIVING - AREA 1::
GROUP 2 (Oiler).....$ 43.11 31.15
OPERATOR: POWER EQUIPMENT, PILEDRIVING - AREA 1::
GROUP 2 (Lifting devices).....$ 50.82 31.15
OPERATOR: POWER EQUIPMENT, PILEDRIVING - AREA 1::
GROUP 1 (Truck Crane Oiler).....$ 45.66 31.15
OPERATOR: POWER EQUIPMENT, PILEDRIVING - AREA 1::
GROUP 1 (Oiler).....$ 43.38 31.15
OPERATOR: POWER EQUIPMENT, PILEDRIVING - AREA 1::
GROUP 1 (Lifting devices).....$ 52.64 31.15
OPERATOR: POWER EQUIPMENT, TUNNEL AND UNDERGROUND
WORK - AREA 1:: UNDERGROUND: (GROUP 5).....$ 58.09 32.53
OPERATOR: POWER EQUIPMENT, TUNNEL AND UNDERGROUND
WORK - AREA 1:: UNDERGROUND: (GROUP 4).....$ 59.23 32.53
OPERATOR: POWER EQUIPMENT, TUNNEL AND UNDERGROUND
WORK - AREA 1:: UNDERGROUND: (GROUP 3).....$ 60.37 32.53
OPERATOR: POWER EQUIPMENT, TUNNEL AND UNDERGROUND
WORK - AREA 1:: UNDERGROUND: (GROUP 2).....$ 61.70 32.53
OPERATOR: POWER EQUIPMENT, TUNNEL AND UNDERGROUND
WORK - AREA 1:: UNDERGROUND: (GROUP 1-A).....$ 65.43 32.53
OPERATOR: POWER EQUIPMENT, TUNNEL AND UNDERGROUND
WORK - AREA 1:: UNDERGROUND: (GROUP 1).....$ 62.96 32.53
OPERATOR: POWER EQUIPMENT, TUNNEL AND UNDERGROUND
WORK - AREA 1:: SHAFTS, STOPES, RAISES: (GROUP 5)...$ 58.19 32.53
OPERATOR: POWER EQUIPMENT, TUNNEL AND UNDERGROUND
WORK - AREA 1:: SHAFTS, STOPES, RAISES: (GROUP 4)...$ 59.33 32.53
OPERATOR: POWER EQUIPMENT, TUNNEL AND UNDERGROUND
WORK - AREA 1:: SHAFTS, STOPES, RAISES: (GROUP 3)...$ 60.47 32.53
OPERATOR: POWER EQUIPMENT, TUNNEL AND UNDERGROUND
WORK - AREA 1:: SHAFTS, STOPES, RAISES: (GROUP 2)...$ 61.80 32.53
OPERATOR: POWER EQUIPMENT, TUNNEL AND UNDERGROUND
WORK - AREA 1:: SHAFTS, STOPES, RAISES: (GROUP 1-A).$ 65.53 32.53
OPERATOR: POWER EQUIPMENT, TUNNEL AND UNDERGROUND
WORK - AREA 1:: SHAFTS, STOPES, RAISES: (GROUP 1)...$ 63.06 32.53
OPERATOR: POWER EQUIPMENT, STEEL ERECTION - AREA
1:: GROUP 5.....$ 62.24 32.53
OPERATOR: POWER EQUIPMENT, STEEL ERECTION - AREA
1:: GROUP 4.....$ 63.54 32.53
OPERATOR: POWER EQUIPMENT, STEEL ERECTION - AREA
1:: GROUP 3.....$ 65.56 32.53
OPERATOR: POWER EQUIPMENT, STEEL ERECTION - AREA
1:: GROUP 2.....$ 67.04 32.53
OPERATOR: POWER EQUIPMENT, STEEL ERECTION - AREA
1:: GROUP 1.....$ 68.81 32.53
OPERATOR: POWER EQUIPMENT, CRANES AND ATTACHMENTS
- AREA 1:: GROUP 4.....$ 61.30 32.53
OPERATOR: POWER EQUIPMENT, CRANES AND ATTACHMENTS
- AREA 1:: GROUP 3 (Hydraulic).....$ 60.61 32.53
OPERATOR: POWER EQUIPMENT, CRANES AND ATTACHMENTS
- AREA 1:: GROUP 3 (Cranes).....$ 64.34 32.53
OPERATOR: POWER EQUIPMENT, CRANES AND ATTACHMENTS
- AREA 1:: GROUP 2.....$ 66.08 32.53
OPERATOR: POWER EQUIPMENT, CRANES AND ATTACHMENTS
- AREA 1:: GROUP 1.....$ 68.59 32.53
OPERATOR: POWER EQUIPMENT, AREA 1:: GROUP 8-A.....$ 55.49 32.53
OPERATOR: POWER EQUIPMENT, AREA 1:: GROUP 8.....$ 57.70 32.53

OPERATOR: POWER EQUIPMENT, AREA 1:: GROUP 7.....$ 58.84 32.53
OPERATOR: POWER EQUIPMENT, AREA 1:: GROUP 6.....$ 59.98 32.53
OPERATOR: POWER EQUIPMENT, AREA 1:: GROUP 5.....$ 61.30 32.53
OPERATOR: POWER EQUIPMENT, AREA 1:: GROUP 4.....$ 62.57 32.53
OPERATOR: POWER EQUIPMENT, AREA 1:: GROUP 3.....$ 63.95 32.53
OPERATOR: POWER EQUIPMENT, AREA 1:: GROUP 2.....$ 65.43 32.53
OPERATOR: POWER EQUIPMENT, AREA 1:: GROUP 1.....$ 66.96 32.53

IRON0118-012 01/01/2025

	Rates	Fringes
IRONWORKER ALPINE, LASSEN, MODOC, SISKIYOU AND TRINITY COUNTIES	$ 43.75	34.45

IRON0118-013 01/01/2025

	Rates	Fringes
IRONWORKER AMADOR, BUTTE, COLUSA,EL DORADO, GLENN,MARIN, NAPA, NEVADA, PLACER,PLUMAS, SACRAMENTO, SHASTA, SIERRA, SOLANO, SONOMA, SUTTER, TEHAMA, YOLO AND YUBA COUNTIES	$ 50.70	35.15

LABO0067-003 07/01/2024

	Rates	Fringes
LABORER, ASBESTOS/MOLD/LEAD LABORER: REMAINING COUNTIES	$ 36.75	29.69
LABORER, ASBESTOS/MOLD/LEAD LABORER: MARIN AND NAPA COUNTIES	$ 37.75	29.69

LABO0067-005 01/01/2024

	Rates	Fringes
LABORER, TRAFFIC CONTROL/LANE CLOSURE: TRAFFIC CONTROL PERSON II (Area B)	$ 34.06	27.32
LABORER, TRAFFIC CONTROL/LANE CLOSURE: TRAFFIC CONTROL PERSON II (Area A)	$ 35.06	27.32
LABORER, TRAFFIC CONTROL/LANE CLOSURE: TRAFFIC CONTROL PERSON I (Area B)	$ 36.56	27.32
LABORER, TRAFFIC CONTROL/LANE CLOSURE: TRAFFIC CONTROL PERSON I (Area A)	$ 37.56	27.32
LABORER, TRAFFIC CONTROL/LANE CLOSURE: ESCORT DRIVER, FLAG PERSON (Area B)	$ 36.26	27.32
LABORER, TRAFFIC CONTROL/LANE CLOSURE: ESCORT DRIVER, FLAG PERSON (Area A)	$ 37.26	27.32

LABO0185-002 07/01/2023

	Rates	Fringes
LABORER: MASON TENDER-BRICK ALPINE, AMADOR, BUTTE, COLUSA, EL DORADO, GLENN, LASSEN, MODOC, NEVADA, PLACER, PLUMAS, SACRAMENTO, SHASTA, SIERRA, SISKIYOU, SUTTER, TEHAMA, TRINITY, YOLO AND YUBA COUNTIES	$ 36.29	25.55

LABO0185-005 06/26/2023

	Rates	Fringes
TUNNEL AND SHAFT LABORERS: SHOTCRETE SPECIALIST ALPINE, AMADOR, BUTTE, COLUSA, EL DORADO, GLENN, LASSEN, MODOC, NEVADA, PLACER, PLUMAS, SACRAMENTO, SHASTA, SIERRA, SISKIYOU, SUTTER, TEHAMA, TRINITY, YOLO AND YUBA COUNTIES	$ 46.41	27.72
TUNNEL AND SHAFT LABORERS: GROUP 5: GROUT CREW; REBOUNDMAN; SWAMPER/ BRAKEMAN (ALPINE, AMADOR,		

BUTTE, COLUSA, EL DORADO, GLENN, LASSEN, MODOC, NEVADA, PLACER, PLUMAS, SACRAMENTO, SHASTA, SIERRA, SISKIYOU, SUTTER, TEHAMA, TRINITY, YOLO AND YUBA COUNTIES).....$ 44.42 27.72

TUNNEL AND SHAFT LABORERS: GROUP 4: VIBRATOR OPERATOR, PAVEMENT BREAKER; BULL GANG - MUCKERS, TRACKMEN; CONCRETE CREW - INCLUDES RODDING AND SPREADING, DUMPMEN (ANY METHOD) (ALPINE, AMADOR, BUTTE, COLUSA, EL DORADO, GLENN, LASSEN, MODOC, NEVADA, PLACER, PLUMAS, SACRAMENTO, SHASTA, SIERRA, SISKIYOU, SUTTER, TEHAMA, TRINITY, YOLO AND YUBA COUNTIES).....$ 44.96 27.72

TUNNEL AND SHAFT LABORERS: GROUP 3: BIT GRINDER; BLASTER, DRILLER, POWDERMEN, HEADING; CHERRY PICKERMEN - WHERE CAR IS LIFTED; CONCRETE FINISHER IN TUNNEL; CONCRETE SCREEDMAN; GROUT PUMPMAN AND POTMAN; GUNITE & SHOTCRETE GUNMAN & POTMAN; HEADERMEN; HIGH PRESSURE NOZZLEMAN; MINER - TUNNEL, INCLUDING TOP AND BOTTOM MAN ON SHAFT AND RAISE WORK; NIPPER; NOZZLEMAN ON SLICK LINE; SANDBLASTER - POTMAN, ROBOTIC SHOTCRETE PLACER, SEGMENT ERECTOR, TUNNEL MUCK HAULER, STEEL FORM RAISER AND SETTER; TIMBERMAN, RETIMBERMAN (WOOD OR STEEL OR SUBSTITUTE MATERIALS THEREFORE); TUGGER (FOR TUNNEL LABORER WORK); CABLE TENDER; CHUCK TENDER; POWDERMAN - PRIMER HOUSE (ALPINE, AMADOR, BUTTE, COLUSA, EL DORADO, GLENN, LASSEN, MODOC, NEVADA, PLACER, PLUMAS, SACRAMENTO, SHASTA, SIERRA, SISKIYOU, SUTTER, TEHAMA, TRINITY, YOLO AND YUBA COUNTIES).....$ 45.41 27.72

TUNNEL AND SHAFT LABORERS: GROUP 2: RODMEN; SHAFT WORK & RAISE (BELOW ACTUAL OR EXCAVATED GROUND LEVEL) (ALPINE, AMADOR, BUTTE, COLUSA, EL DORADO, GLENN, LASSEN, MODOC, NEVADA, PLACER, PLUMAS, SACRAMENTO, SHASTA, SIERRA, SISKIYOU, SUTTER, TEHAMA, TRINITY, YOLO AND YUBA COUNTIES).....$ 45.66 27.72

TUNNEL AND SHAFT LABORERS: GROUP 1: DIAMOND DRILLER; GROUNDMEN; GUNITE AND SHOTCRETE NOZZLEMEN (ALPINE, AMADOR, BUTTE, COLUSA, EL DORADO, GLENN, LASSEN, MODOC, NEVADA, PLACER, PLUMAS, SACRAMENTO, SHASTA, SIERRA, SISKIYOU, SUTTER, TEHAMA, TRINITY, YOLO AND YUBA COUNTIES).....$ 45.89 27.72

LABO0185-006 06/26/2023

	Rates	Fringes
LABORER: GARDENERS, HORTICULTURAL & LANDSCAPE LABORERS - AREA B: (ALPINE, AMADOR, BUTTE, COLUSA, EL DORADO, GLENN, LASSEN, MODOC, NEVADA, PLACER, PLUMAS, SACRAMENTO, SHIASTA, SIERRA, SISKIYOU, SUTTER, TEHAMA, TRINITY, YOLO, YUBA COUNTIES)- (2) Establishment Warranty Period	$ 28.94	27.30
LABORER: GARDENERS, HORTICULTURAL & LANDSCAPE LABORERS - AREA B: (ALPINE, AMADOR, BUTTE, COLUSA, EL DORADO, GLENN, LASSEN, MODOC, NEVADA, PLACER, PLUMAS, SACRAMENTO, SHIASTA, SIERRA, SISKIYOU, SUTTER, TEHAMA, TRINITY, YOLO, YUBA COUNTIES)- (1) New Construction	$ 35.25	27.30

LABORER, WRECKING - AREA B: GROUP 2: SEMI-SKILLED WRECKER (SALVAGING OF OTHER BUILDING MATERIALS) (ALPINE, AMADOR, BUTTE, COLUSA, EL DORADO, GLENN, LASSEN, MODOC, NEVADA, PLACER, PLUMAS, SACRAMENTO, SHIASTA, SIERRA, SISKIYOU, SUTTER, TEHAMA, TRINITY, YOLO, YUBA COUNTIES) FOOTNOTES: LABORERS WORKING OFF OR WITH OR FROM BOS'N CHAIRS, SWINGING

SCAFFOLDS, BELTS SHALL RECEIVE $0.25 PER HOUR ABOVE THE APPLICABLE WAGE RATE. THIS SHALL NOT APPLY TO WORKERS ENTITLED TO RECEIVE THE WAGE RATE SET FORTH IN GROUP 1-A BELOW.....$ 35.35 27.30

LABORER, WRECKING - AREA B: GROUP 1- SKILLED WRECKER (REMOVING AND SALVAGING OF SASH, WINDOWS AND MATERIALS) FOOTNOTES: LABORERS WORKING OFF OR WITH OR FROM BOS'N CHAIRS, SWINGING SCAFFOLDS, BELTS SHALL RECEIVE $0.25 PER HOUR ABOVE THE APPLICABLE WAGE RATE. THIS SHALL NOT APPLY TO WORKERS ENTITLED TO RECEIVE THE WAGE RATE SET FORTH IN GROUP 1-A BELOW. ALPINE, AMADOR, BUTTE, COLUSA, EL DORADO, GLENN, LASSEN, MODOC, NEVADA, PLACER, PLUMAS, SACRAMENTO, SHIASTA, SIERRA, SISKIYOU, SUTTER, TEHAMA, TRINITY, YOLO, YUBA COUNTIES.....$ 35.50 27.30

LABORER, GUNITE - AREA B: GROUP 4: GUNITE LABORER (ALPINE, AMADOR, BUTTE, COLUSA, EL DORADO, GLENN, LASSEN, MODOC, NEVADA, PLACER, PLUMAS, SACRAMENTO, SHIASTA, SIERRA, SISKIYOU, SUTTER, TEHAMA, TRINITY, YOLO, YUBA COUNTIES) FOOTNOTES: LABORERS WORKING OFF OR WITH OR FROM BOS'N CHAIRS, SWINGING SCAFFOLDS, BELTS SHALL RECEIVE $0.25 PER HOUR ABOVE THE APPLICABLE WAGE RATE. THIS SHALL NOT APPLY TO WORKERS ENTITLED TO RECEIVE THE WAGE RATE SET FORTH IN GROUP 1-A BELOW. .....$ 35.25 27.30

LABORER, GUNITE - AREA B: GROUP 3: REBOUNDMAN (ALPINE, AMADOR, BUTTE, COLUSA, EL DORADO, GLENN, LASSEN, MODOC, NEVADA, PLACER, PLUMAS, SACRAMENTO, SHIASTA, SIERRA, SISKIYOU, SUTTER, TEHAMA, TRINITY, YOLO, YUBA COUNTIES) FOOTNOTES: LABORERS WORKING OFF OR WITH OR FROM BOS'N CHAIRS, SWINGING SCAFFOLDS, BELTS SHALL RECEIVE $0.25 PER HOUR ABOVE THE APPLICABLE WAGE RATE. THIS SHALL NOT APPLY TO WORKERS ENTITLED TO RECEIVE THE WAGE RATE SET FORTH IN GROUP 1-A BELOW. .....$ 35.37 27.30

LABORER, GUNITE - AREA B: GROUP 2: NOZZLEMAN, GUNMAN, POTMAN, GROUNDMAN (ALPINE, AMADOR, BUTTE, COLUSA, EL DORADO, GLENN, LASSEN, MODOC, NEVADA, PLACER, PLUMAS, SACRAMENTO, SHIASTA, SIERRA, SISKIYOU, SUTTER, TEHAMA, TRINITY, YOLO, YUBA COUNTIES) FOOTNOTES: LABORERS WORKING OFF OR WITH OR FROM BOS'N CHAIRS, SWINGING SCAFFOLDS, BELTS SHALL RECEIVE $0.25 PER HOUR ABOVE THE APPLICABLE WAGE RATE. THIS SHALL NOT APPLY TO WORKERS ENTITLED TO RECEIVE THE WAGE RATE SET FORTH IN GROUP 1-A BELOW. .....$ 35.96 27.30

LABORER, GUNITE - AREA B: GROUP 1- GROUP 1: STRUCTURAL NOZZLEMAN FOOTNOTES: LABORERS WORKING OFF OR WITH OR FROM BOS'N CHAIRS, SWINGING SCAFFOLDS, BELTS SHALL RECEIVE $0.25 PER HOUR ABOVE THE APPLICABLE WAGE RATE. THIS SHALL NOT APPLY TO WORKERS ENTITLED TO RECEIVE THE WAGE RATE SET FORTH IN GROUP 1-A BELOW. ALPINE, AMADOR, BUTTE, COLUSA, EL DORADO, GLENN, LASSEN, MODOC, NEVADA, PLACER, PLUMAS, SACRAMENTO, SHIASTA, SIERRA, SISKIYOU, SUTTER, TEHAMA, TRINITY, YOLO, YUBA COUNTIES.....$ 36.46 27.30

LABORER, CONSTRUCTION CRAFT LABORERS - AREA B: GROUP 4: FINAL CLEAN-UP WORK OF DEBRIS, GROUNDS AND BUILDING INCLUDING BUT NOT LIMITED TO: STREET CLEANER; CLEANING AND WASHING WINDOWS; BRICK CLEANER (JOBSITE ONLY); MATERIAL CLEANER (JOBSITE ONLY). THE CLASSIFICATION ""MATERIAL CLEANER"" IS TO BE UTILIZED UNDER THE FOLLOWING CONDITIONS:

A: AT DEMOLITION SITE FOR THE SALVAGE OF THE MATERIAL. B: AT THE CONCLUSION OF A JOB WHERE THE MATERIAL IS TO BE SALVAGED AND STOCKED TO BE REUSED ON ANOTHER JOB. C: FOR THE CLEANING OF SALVAGE MATERIAL AT THE JOBSITE OR TEMPORARY JOBSITE YARD. THE MATERIAL CLEANER CLASSIFICATION SHOULD NOT BE USED IN THE PERFORMANCE OF ""FORM STRIPPING, CLEANING AND OILING AND MOVING TO THE NEXT POINT OF ERECTION"". (ALPINE, AMADOR, BUTTE, COLUSA, EL DORADO, GLENN, LASSEN, MODOC, NEVADA, PLACER, PLUMAS, SACRAMENTO, SHIASTA, SIERRA, SISKIYOU, SUTTER, TEHAMA, TRINITY, YOLO, YUBA COUNTIES) FOOTNOTES: LABORERS WORKING OFF OR WITH OR FROM BOS'N CHAIRS, SWINGING SCAFFOLDS, BELTS SHALL RECEIVE $0.25 PER HOUR ABOVE THE APPLICABLE WAGE RATE. Sewer cleaners shall receive $4.00 per day above Group 1 wage rates. ""Sewer cleaner"" means any worker who handles or comes in contact with raw sewage in small diameter sewers. Those who work inside recently active, large diameter sewers, and all recently active sewer manholes shal receive $5.00 per day above Group 1 wage rates.
Maintenance and repair track and road beds. All employees performing work covered herein shall receive $ .25 per hour above their regular rate for all work performed on underground structures not specifically covered herein. This paragraph shall not be construed to apply to work below ground level in open cut. It shall apply to cut and cover work of subway construction after the temporary cover has been placed. .....$ 28.94 27.30

LABORER, CONSTRUCTION CRAFT LABORERS - AREA B: GROUP 3: CONSTRUCTION LABORERS, INCLUDING BRIDGE AND GENERAL LABORER; DUMP, LOAD SPOTTER; FLAG PERSON; FIRE WATCHER; FENCE ERECTOR; GUARDRAIL ERECTOR; GARDENER, HORTICULTURAL AND LANDSCAPE LABORER; JETTING; LIMBER, BRUSH LOADER AND PILER; PAVEMENT MARKER (BUTTON SETTER); MAINTENANCE, REPAIR TRACK AND ROAD BEDS; STREETCAR AND RAILROAD CONSTRUCTION TRACK LABORER; TEMPORARY AIR AND WATER LINES, VICTAULIC OR SIMILAR; TOOL ROOM ATTENDANT (JOBSITE ONLY) (ALPINE, AMADOR, BUTTE, COLUSA, EL DORADO, GLENN, LASSEN, MODOC, NEVADA, PLACER, PLUMAS, SACRAMENTO, SHIASTA, SIERRA, SISKIYOU, SUTTER, TEHAMA, TRINITY, YOLO, YUBA COUNTIES) FOOTNOTES: LABORERS WORKING OFF OR WITH OR FROM BOS'N CHAIRS, SWINGING SCAFFOLDS, BELTS SHALL RECEIVE $0.25 PER HOUR ABOVE THE APPLICABLE WAGE RATE. Sewer cleaners shall receive $4.00 per day above Group 1 wage rates. ""Sewer cleaner"" means any worker who handles or comes in contact with raw sewage in small diameter sewers. Those who work inside recently active, large diameter sewers, and all recently active sewer manholes shal receive $5.00 per day above Group 1 wage rates.
Maintenance and repair track and road beds. All employees performing work covered herein shall receive $ .25 per hour above their regular rate for all work performed on underground structures not specifically covered herein. This paragraph shall not be construed to apply to work below ground level in open cut. It shall apply to cut and cover work of subway construction after the temporary cover has been placed.....$ 35.25 27.30

LABORER, CONSTRUCTION CRAFT LABORERS - AREA B: GROUP 2: ASPHALT SHOVELER; CEMENT DUMPER AND HANDLING DRY CEMENT OR GYPSUM; CHOKE-SETTER AND RIGGER (CLEARING WORK); CONCRETE BUCKET DUMPER AND CHUTE; CONCRETE CHIPPING AND GRINDING; CONCRETE LABORER (WET OR DRY); DRILLER TENDER, CHUCK TENDER, NIPPER; GUINEA CHASER (STAKE), GROUT CREW; HIGH PRESSURE NOZZLE, ADDUCTOR; HYDRAULIC MONITOR (OVER 100 LBS. PRESSURE); LOADING AND UNLOADING, CARRYING AND HAULING OF ALL RODS AND MATERIALS FOR USE IN REINFORCING CONCRETE CONSTRUCTION; PITTSBURGH CHIPPER AND SIMILAR TYPE BRUSH SHREDDERS; SLOPER; SINGLE FOOT, HAND-HELD, PNEUMATIC TAMPER; ALL PNEUMATIC, AIR, GAS AND ELECTRIC TOOLS NOT LISTED IN GROUPS 1 THROUGH 1-F; JACKING OF PIPE - UNDER 12 INCHES (ALPINE, AMADOR, BUTTE, COLUSA, EL DORADO, GLENN, LASSEN, MODOC, NEVADA, PLACER, PLUMAS, SACRAMENTO, SHIASTA, SIERRA, SISKIYOU, SUTTER, TEHAMA, TRINITY, YOLO, YUBA COUNTIES) FOOTNOTES: LABORERS WORKING OFF OR WITH OR FROM BOS'N CHAIRS, SWINGING SCAFFOLDS, BELTS SHALL RECEIVE $0.25 PER HOUR ABOVE THE APPLICABLE WAGE RATE. Sewer cleaners shall receive $4.00 per day above Group 1 wage rates. ""Sewer cleaner"" means any worker who handles or comes in contact with raw sewage in small diameter sewers. Those who work inside recently active, large diameter sewers, and all recently active sewer manholes shal receive $5.00 per day above Group 1 wage rates.
Maintenance and repair track and road beds. All employees performing work covered herein shall receive $ .25 per hour above their regular rate for all work performed on underground structures not specifically covered herein. This paragraph shall not be construed to apply to work below ground level in open cut. It shall apply to cut and cover work of subway construction after the temporary cover has been placed.....$ 35.35 27.30

LABORER, CONSTRUCTION CRAFT LABORERS - AREA B: GROUP 1-E: WORK ON AND/OR IN BELL HOLE FOOTINGS AND SHAFTS THEREOF, AND WORK ON AND IN DEEP FOOTINGS. (A DEEP FOOTING IS A HOLE 15 FEET OR MORE IN DEPTH.) IN THE EVENT THE DEPTH OF THE FOOTING IS UNKNOWN AT THE COMMENCEMENT OF EXCAVATION, AND THE FINAL DEPTH EXCEEDS 15 FEET, THE DEEP FOOTING WAGE RATE WOULD APPLY TO ALL EMPLOYEES FOR EACH AND EVERY DAY WORKED ON OR IN THE EXCAVATION OF THE FOOTING FROM THE DATE OF INCEPTION. (ALPINE, AMADOR, BUTTE, COLUSA, EL DORADO, GLENN, LASSEN, MODOC, NEVADA, PLACER, PLUMAS, SACRAMENTO, SHIASTA, SIERRA, SISKIYOU, SUTTER, TEHAMA, TRINITY, YOLO, YUBA COUNTIES) WORK ON AND/OR IN BELL HOLE FOOTINGS AND SHAFTS THEREOF, AND WORK ON AND IN DEEP FOOTINGS. (A DEEP FOOTING IS A HOLE 15 FEET OR MORE IN DEPTH.) FOOTNOTES: LABORERS WORKING OFF OR WITH OR FROM BOS'N CHAIRS, SWINGING SCAFFOLDS, BELTS SHALL RECEIVE $0.25 PER HOUR ABOVE THE APPLICABLE WAGE RATE. Sewer cleaners shall receive $4.00 per day above Group 1 wage rates. ""Sewer cleaner"" means any worker who handles or comes in contact with raw sewage in small diameter sewers. Those who work inside recently active, large diameter sewers, and all recently active sewer manholes shal receive $5.00 per day above Group 1 wage rates.

Maintenance and repair track and road beds. All employees performing work covered herein shall receive $ .25 per hour above their regular rate for all work performed on underground structures not specifically covered herein. This paragraph shall not be construed to apply to work below ground level in open cut. It shall apply to cut and cover work of subway construction after the temporary cover has been placed.....$ 36.05 27.30

LABORER, CONSTRUCTION CRAFT LABORERS - AREA B: GROUP 1-C: BURNING AND WELDING IN CONNECTION WITH LABORERS' WORK; SYNTHETIC THERMOPLASTICS AND SIMILAR TYPE WELDING (ALPINE, AMADOR, BUTTE, COLUSA, EL DORADO, GLENN, LASSEN, MODOC, NEVADA, PLACER, PLUMAS, SACRAMENTO, SHIASTA, SIERRA, SISKIYOU, SUTTER, TEHAMA, TRINITY, YOLO, YUBA COUNTIES) FOOTNOTES: LABORERS WORKING OFF OR WITH OR FROM BOS'N CHAIRS, SWINGING SCAFFOLDS, BELTS SHALL RECEIVE $0.25 PER HOUR ABOVE THE APPLICABLE WAGE RATE. Sewer cleaners shall receive $4.00 per day above Group 1 wage rates. ""Sewer cleaner"" means any worker who handles or comes in contact with raw sewage in small diameter sewers. Those who work inside recently active, large diameter sewers, and all recently active sewer manholes shal receive $5.00 per day above Group 1 wage rates. Maintenance and repair track and road beds. All employees performing work covered herein shall receive $ .25 per hour above their regular rate for all work performed on underground structures not specifically covered herein. This paragraph shall not be construed to apply to work below ground level in open cut. It shall apply to cut and cover work of subway construction after the temporary cover has been placed.....$ 35.55 27.30

LABORER, CONSTRUCTION CRAFT LABORERS - AREA B: GROUP 1-A: JOY DRILL MODEL TWM-2A; GARDNER-DENVER MODEL DH143 AND SIMILAR TYPE DRILLS; TRACK DRILLER; JACK LEG DRILLER; WAGON DRILLER; MECHANICAL DRILLERS, ALL TYPES REGARDLESS OF TYPE OR METHOD OF POWER; MECHANICAL PIPE LAYERS, ALL TYPES REGARDLESS OF TYPE OR METHOD OF POWER; BLASTER AND POWDER; ALL WORK OF LOADING, PLACING AND BLASTING OF ALL POWDER AND EXPLOSIVES OF WHATEVER TYPE REGARDLESS OF METHOD USED FOR SUCH LOADING AND PLACING; HIGH SCALERS (INCLUDING DRILLING OF SAME); TREE TOPPER; BIT GRINDER (ALPINE, AMADOR, BUTTE, COLUSA, EL DORADO, GLENN, LASSEN, MODOC, NEVADA, PLACER, PLUMAS, SACRAMENTO, SHIASTA, SIERRA, SISKIYOU, SUTTER, TEHAMA, TRINITY, YOLO, YUBA COUNTIES) Sewer cleaners shall receive $4.00 per day above Group 1 wage rates. ""Sewer cleaner"" means any worker who handles or comes in contact with raw sewage in small diameter sewers. Those who work inside recently active, large diameter sewers, and all recently active sewer manholes shal receive $5.00 per day above Group 1 wage rates. Maintenance and repair track and road beds. All employees performing work covered herein shall receive $ .25 per hour above their regular rate for all work performed on underground structures not specifically covered herein. This paragraph shall not be construed to apply to work below ground level in open cut. It shall apply to cut and cover

work of subway construction after the temporary cover has been placed.....$ 35.72 27.30

LABORER, CONSTRUCTION CRAFT LABORERS - AREA B: GROUP 1 LABORER CLASSIFICATIONS CONSTRUCTION SPECIALIST GROUP: ASPHALT IRONER AND RAKER; CHAINSAW; LASER BEAM IN CONNECTION WITH LABORERS' WORK; CAST-IN- PLACE MANHOLE FORM SETTER; PRESSURE PIPELAYER; DAVIS TRENCHER - 300 OR SIMILAR TYPE (AND ALL SMALL TRENCHERS); BLASTER; DIAMOND DRILLER; MULTIPLE UNIT DRILL; HYDRAULIC DRILL. GROUP 1: ASPHALT SPREADER BOXES (ALL TYPES); BARKO, WACKER AND SIMILAR TYPE TAMPERS; BUGGYMOBILE; CAULKER, BANDER, PIPEWRAPPER, CONDUIT LAYER, PLASTIC PIPELAYER; CERTIFIED HAZARDOUS WASTE WORKER INCLUDING LEADE ABATEMENT; COMPACTORS OF ALL TYPES; CONCRETE AND MAGNESITE MIXER, 1/2 YD. AND UNDER; CONCRETE PAN WORK; CONCRETE SANDER; CONCRETE SAW; CRIBBER AND/OR SHORING; CUT GRANITE CURB SETTER; DRI-PAK-IT MACHINE; FALLER, LOGLOADER AND BUCKER; FORM RAISER, SLIP FORMS; GREEN CUTTER; HEADERBOARD, HUBSETTER, ALIGNER, BY ANY METHOD; HIGH PRESSURE BLOW PIPE (1-1/2"" OR OVER, 100 LBS. PRESSURE/OVER); HYDRO SEEDER AND SIMILAR TYPE; JACKHAMMER OPERATOR; JACKING OF PIPE OVER 12 INCHES; JACKSON AND SIMILAR TYPE COMPACTOR; KETTLE TENDER, POT AND WORKER APPLYING ASPHALT, LAY-KOLD, CREOSOTE, LIME, CAUSTIC AND SIMILAR TYPE MATERIALS (APPLYING MEANS APPLYING, DIPPING OR HANDLING OF SUCH MATERIALS); LAGGING, SHEETING, WHALING, BRACING, TRENCHJACKING, LAGGING HAMMER; MAGNESITE, EPOXYRESIN, FIBERGLASS, MASTIC WORKER (WET OR DRY); NO JOINT PIPE AND STRIPPING OF SAME, INCLUDING REPAIR OF VOIDS; PAVEMENT BREAKER AND SPADER, INCLUDING TOOL GRINDER; PERMA CURB; PIPELAYER (INCLUDING GRADE CHECKING IN CONNECTION WITH PIPELAYING); PRECAST-MANHOLE SETTER; PRESSURE PIPE TESTER; POST HOLE DIGGER, AIR, GAS AND ELECTRIC; POWER BROOM SWEEPER; POWER TAMPERS OF ALL TYPES (EXCEPT AS SHOWN IN GROUP 2); RAM SET GUN AND STUD GUN; RIPRAP STONEPAVER AND ROCK-SLINGER, INCLUDING PLACING OF SACKED CONCRETE AND/OR SAND (WET OR DRY) AND GABIONS AND SIMILAR TYPE; ROTARY SCARIFIER OR MULTIPLE HEAD CONCRETE CHIPPING SCARIFIER; ROTO AND DITCH WITCH; ROTOTILLER; SANDBLASTER, POT, GUN, NOZZLE OPERATORS; SIGNALLING AND RIGGING; TANK CLEANER; TREE CLIMBER; TURBO BLASTER; VIBRASCREED, BULL FLOAT IN CONNECTION WITH LABORERS' WORK; VIBRATOR; HAZARDOUS WASTE WORKER (LEAD REMOVAL); ASBESTOS AND MOLD REMOVAL WORKER GROUP 1-B: SEWER CLEANERS SHALL RECEIVE $4.00 PER DAY ABOVE GROUP 1 WAGE RATES. ""SEWER CLEANER"" MEANS ANY WORKER WHO HANDLES OR COMES IN CONTACT WITH RAW SEWAGE IN SMALL DIAMETER SEWERS. THOSE WHO WORK INSIDE RECENTLY ACTIVE, LARGE DIAMETER SEWERS, AND ALL RECENTLY ACTIVE SEWER MANHOLES SHAL RECEIVE $5.00 PER DAY ABOVE GROUP 1 WAGE RATES. GROUP 1-D: MAINTENANCE AND REPAIR TRACK AND ROAD BEDS. ALL EMPLOYEES PERFORMING WORK COVERED HEREIN SHALL RECEIVE $ .25 PER HOUR ABOVE THEIR REGULAR RATE FOR ALL WORK PERFORMED ON UNDERGROUND STRUCTURES NOT SPECIFICALLY COVERED HEREIN. THIS PARAGRAPH SHALL NOT BE CONSTRUED TO APPLY TO WORK BELOW GROUND LEVEL IN OPEN CUT. IT SHALL APPLY TO CUT AND COVER WORK OF SUBWAY CONSTRUCTION AFTER THE TEMPORARY COVER HAS BEEN PLACED. FOOTNOTES: LABORERS

WORKING OFF OR WITH OR FROM BOS'N CHAIRS, SWINGING SCAFFOLDS, BELTS SHALL RECEIVE $0.25 PER HOUR ABOVE THE APPLICABLE WAGE RATE. THIS SHALL NOT APPLY TO WORKERS ENTITLED TO RECEIVE THE WAGE RATE SET FORTH IN GROUP 1-A BELOW. ALPINE, AMADOR, BUTTE, COLUSA, EL DORADO, GLENN, LASSEN, MODOC, NEVADA, PLACER, PLUMAS, SACRAMENTO, SHIASTA, SIERRA, SISKIYOU, SUTTER, TEHAMA, TRINITY, YOLO, YUBA COUNTIES.....$ 35.50 27.30

LABORER (CONSTRUCTION CRAFT LABORERS - AREA B:): CONSTRUCTION SPECIALIST GROUP ASPHALT IRONER AND RAKER; CHAINSAW; LASER BEAM IN CONNECTION WITH LABORERS' WORK; CAST-IN- PLACE MANHOLE FORM SETTER; PRESSURE PIPELAYER; DAVIS TRENCHER - 300 OR SIMILAR TYPE (AND ALL SMALL TRENCHERS); BLASTER; DIAMOND DRILLER; MULTIPLE UNIT DRILL; HYDRAULIC DRILL ALPINE, AMADOR, BUTTE, COLUSA, EL DORADO, GLENN, LASSEN, MODOC, NEVADA, PLACER, PLUMAS, SACRAMENTO, SHIASTA, SIERRA, SISKIYOU, SUTTER, TEHAMA, TRINITY, YOLO, YUBA COUNTIES FOOTNOTES: LABORERS WORKING OFF OR WITH OR FROM BOS'N CHAIRS, SWINGING SCAFFOLDS, BELTS SHALL RECEIVE $0.25 PER HOUR ABOVE THE APPLICABLE WAGE RATE. THIS SHALL NOT APPLY TO WORKERS ENTITLED TO RECEIVE THE WAGE RATE SET FORTH IN GROUP 1-A BELOW. SEWER CLEANERS SHALL RECEIVE $4.00 PER DAY ABOVE GROUP 1 WAGE RATES. ""SEWER CLEANER"" MEANS ANY WORKER WHO HANDLES OR COMES IN CONTACT WITH RAW SEWAGE IN SMALL DIAMETER SEWERS. THOSE WHO WORK INSIDE RECENTLY ACTIVE, LARGE DIAMETER SEWERS, AND ALL RECENTLY ACTIVE SEWER MANHOLES SHAL RECEIVE $5.00 PER DAY ABOVE GROUP 1 WAGE RATES. MAINTENANCE AND REPAIR TRACK AND ROAD BEDS. ALL EMPLOYEES PERFORMING WORK COVERED HEREIN SHALL RECEIVE $ .25 PER HOUR ABOVE THEIR REGULAR RATE FOR ALL WORK PERFORMED ON UNDERGROUND STRUCTURES NOT SPECIFICALLY COVERED HEREIN. THIS PARAGRAPH SHALL NOT BE CONSTRUED TO APPLY TO WORK BELOW GROUND LEVEL IN OPEN CUT. IT SHALL APPLY TO CUT AND COVER WORK OF SUBWAY CONSTRUCTION AFTER THE TEMPORARY COVER HAS BEEN PLACED. FOOTNOTES: LABORERS WORKING OFF OR WITH OR FROM BOS'N CHAIRS, SWINGING SCAFFOLDS, BELTS SHALL RECEIVE $0.25 PER HOUR ABOVE THE APPLICABLE WAGE RATE. THIS SHALL NOT APPLY TO WORKERS ENTITLED TO RECEIVE THE WAGE RATE SET FORTH IN GROUP 1-A BELOW.....$ 36.20 27.30

LABO0185-008 07/01/2023

	Rates	Fringes
PLASTERER TENDER WORK ON A SWING STAGE SCAFFOLD: $1.00 PER HOUR ADDITIONAL.....	$ 39.77	28.54

LABO0261-002 07/01/2023

	Rates	Fringes
LABORER, TRAFFIC CONTROL/LANE CLOSURE: TRAFFIC CONTROL PERSON II INSTALLATION AND REMOVAL OF TEMPORARY/PERMANENT SIGNS, MARKERS, DELINEATORS AND CRASH CUSHIONS. MARIN COUNTY.....	$ 35.06	27.30
LABORER, TRAFFIC CONTROL/LANE CLOSURE: TRAFFIC CONTROL PERSON I LAYOUT OF TRAFFIC CONTROL, CRASH CUSHIONS, CONSTRUCTION AREA AND ROADSIDE SIGNAGE. MARIN COUNTY.....	$ 37.56	27.30

LABORER, TRAFFIC CONTROL/LANE CLOSURE: ESCORT

DRIVER, FLAG PERSON (MARIN COUNTY).....$ 37.26 27.30

LABO0261-004 06/26/2023

	Rates	Fringes
TUNNEL AND SHAFT LABORERS: SHOTCRETE SPECIALIST MARIN COUNTY	$ 46.41	27.72
TUNNEL AND SHAFT LABORERS: GROUP 5 GROUT CREW; REBOUNDMAN; SWAMPER/ BRAKEMAN (MARIN COUNTY)	$ 44.42	27.72
TUNNEL AND SHAFT LABORERS: GROUP 4 VIBRATOR OPERATOR, PAVEMENT BREAKER; BULL GANG - MUCKERS, TRACKMEN; CONCRETE CREW - INCLUDES RODDING AND SPREADING, DUMPMEN (ANY METHOD) (MARIN COUNTY)	$ 44.96	27.72
TUNNEL AND SHAFT LABORERS: GROUP 3 BIT GRINDER; BLASTER, DRILLER, POWDERMEN, HEADING; CHERRY PICKERMEN - WHERE CAR IS LIFTED; CONCRETE FINISHER IN TUNNEL; CONCRETE SCREEDMAN; GROUT PUMPMAN AND POTMAN; GUNITE & SHOTCRETE GUNMAN & POTMAN; HEADERMEN; HIGH PRESSURE NOZZLEMAN; MINER - TUNNEL, INCLUDING TOP AND BOTTOM MAN ON SHAFT AND RAISE WORK; NIPPER; NOZZLEMAN ON SLICK LINE; SANDBLASTER - POTMAN, ROBOTIC SHOTCRETE PLACER, SEGMENT ERECTOR, TUNNEL MUCK HAULER, STEEL FORM RAISER AND SETTER; TIMBERMAN, RETIMBERMAN (WOOD OR STEEL OR SUBSTITUTE MATERIALS THEREFORE); TUGGER (FOR TUNNEL LABORER WORK); CABLE TENDER; CHUCK TENDER; POWDERMAN - PRIMER HOUSE (MARIN COUNTY)	$ 45.41	27.72
TUNNEL AND SHAFT LABORERS: GROUP 2 RODMEN; SHAFT WORK & RAISE (BELOW ACTUAL OR EXCAVATED GROUND LEVEL) (MARIN COUNTY)	$ 45.66	27.72
TUNNEL AND SHAFT LABORERS: GROUP 1 DIAMOND DRILLER; GROUNDMEN; GUNITE AND SHOTCRETE NOZZLEMEN (MARIN COUNTY)	$ 45.89	27.72

LABO0261-007 07/01/2023

	Rates	Fringes
LABORER: MASON TENDER-BRICK MARIN COUNTY	$ 37.54	25.55

LABO0261-010 06/26/2023

	Rates	Fringes
LABORER: GARDENERS, HORTICULTURAL & LANDSCAPE LABORERS - AREA A: (MARIN COUNTY)- (2) Establishment Warranty Period	$ 29.94	27.30
LABORER: GARDENERS, HORTICULTURAL & LANDSCAPE LABORERS - AREA A: (MARIN COUNTY)- (1) New Construction	$ 36.25	27.30
LABORER, WRECKING - AREA A:: GROUP 1 (MARIN COUNTY).	$ 36.50	27.30
LABORER, WRECKING - AREA A: GROUP 2 Semi-skilled wrecker (salvaging of other building materials) (MARIN COUNTY) FOOTNOTES: LABORERS WORKING OFF OR WITH OR FROM BOS'N CHAIRS, SWINGING SCAFFOLDS, BELTS SHALL RECEIVE $0.25 PER HOUR ABOVE THE APPLICABLE WAGE RATE. THIS SHALL NOT APPLY TO WORKERS ENTITLED TO RECEIVE THE WAGE RATE SET FORTH IN GROUP 1-A BELOW	$ 36.35	27.30
LABORER, GUNITE - AREA A:: GROUP 1 (MARIN COUNTY)	$ 37.46	27.30
LABORER, GUNITE - AREA A: GROUP 4 GUNITE LABORER (MARIN COUNTY) FOOTNOTES: LABORERS WORKING OFF OR WITH OR FROM BOS'N CHAIRS, SWINGING SCAFFOLDS, BELTS SHALL RECEIVE $0.25 PER HOUR ABOVE THE APPLICABLE WAGE RATE. THIS SHALL NOT APPLY TO WORKERS ENTITLED TO RECEIVE THE WAGE RATE SET FORTH IN GROUP 1-A BELOW	$ 36.25	27.30

LABORER, GUNITE - AREA A: GROUP 3 REBOUNDMAN (MARIN COUNTY) FOOTNOTES: LABORERS WORKING OFF OR WITH OR FROM BOS'N CHAIRS, SWINGING SCAFFOLDS, BELTS SHALL RECEIVE $0.25 PER HOUR ABOVE THE APPLICABLE WAGE RATE. THIS SHALL NOT APPLY TO WORKERS ENTITLED TO RECEIVE THE WAGE RATE SET FORTH IN GROUP 1-A BELOW.....$ 36.37 27.30

LABORER, GUNITE - AREA A: GROUP 2 NOZZLEMAN, GUNMAN, POTMAN, GROUNDMAN (MARIN COUNTY) FOOTNOTES: LABORERS WORKING OFF OR WITH OR FROM BOS'N CHAIRS, SWINGING SCAFFOLDS, BELTS SHALL RECEIVE $0.25 PER HOUR ABOVE THE APPLICABLE WAGE RATE. THIS SHALL NOT APPLY TO WORKERS ENTITLED TO RECEIVE THE WAGE RATE SET FORTH IN GROUP 1-A BELOW..$ 36.96 27.30

LABORER, CONSTRUCTION CRAFT LABORERS - AREA A:: GROUP 1 (MARIN COUNTY).....$ 36.50 27.30

LABORER, CONSTRUCTION CRAFT LABORERS - AREA A: GROUP 4 FINAL CLEAN-UP WORK OF DEBRIS, GROUNDS AND BUILDING INCLUDING BUT NOT LIMITED TO: STREET CLEANER; CLEANING AND WASHING WINDOWS; BRICK CLEANER (JOBSITE ONLY); MATERIAL CLEANER (JOBSITE ONLY). THE CLASSIFICATION ""MATERIAL CLEANER"" IS TO BE UTILIZED UNDER THE FOLLOWING CONDITIONS: A: AT DEMOLITION SITE FOR THE SALVAGE OF THE MATERIAL. B: AT THE CONCLUSION OF A JOB WHERE THE MATERIAL IS TO BE SALVAGED AND STOCKED TO BE REUSED ON ANOTHER JOB. C: FOR THE CLEANING OF SALVAGE MATERIAL AT THE JOBSITE OR TEMPORARY JOBSITE YARD. THE MATERIAL CLEANER CLASSIFICATION SHOULD NOT BE USED IN THE PERFORMANCE OF ""FORM STRIPPING, CLEANING AND OILING AND MOVING TO THE NEXT POINT OF ERECTION"". (MARIN COUNTY) FOOTNOTES: LABORERS WORKING OFF OR WITH OR FROM BOS'N CHAIRS, SWINGING SCAFFOLDS, BELTS SHALL RECEIVE $0.25 PER HOUR ABOVE THE APPLICABLE WAGE RATE. THIS SHALL NOT APPLY TO WORKERS ENTITLED TO RECEIVE THE WAGE RATE SET FORTH IN GROUP 1-A BELOW. SEWER CLEANERS SHALL RECEIVE $4.00 PER DAY ABOVE GROUP 1 WAGE RATES. ""SEWER CLEANER"" MEANS ANY WORKER WHO HANDLES OR COMES IN CONTACT WITH RAW SEWAGE IN SMALL DIAMETER SEWERS. THOSE WHO WORK INSIDE RECENTLY ACTIVE, LARGE DIAMETER SEWERS, AND ALL RECENTLY ACTIVE SEWER MANHOLES SHAL RECEIVE $5.00 PER DAY ABOVE GROUP 1 WAGE RATES. MAINTENANCE AND REPAIR TRACK AND ROAD BEDS. ALL EMPLOYEES PERFORMING WORK COVERED HEREIN SHALL RECEIVE $ .25 PER HOUR ABOVE THEIR REGULAR RATE FOR ALL WORK PERFORMED ON UNDERGROUND STRUCTURES NOT SPECIFICALLY COVERED HEREIN. THIS PARAGRAPH SHALL NOT BE CONSTRUED TO APPLY TO WORK BELOW GROUND LEVEL IN OPEN CUT. IT SHALL APPLY TO CUT AND COVER WORK OF SUBWAY CONSTRUCTION AFTER THE TEMPORARY COVER HAS BEEN PLACED.....$ 29.94 27.30

LABORER, CONSTRUCTION CRAFT LABORERS - AREA A: GROUP 3 CONSTRUCTION LABORERS, INCLUDING BRIDGE AND GENERAL LABORER; DUMP, LOAD SPOTTER; FLAG PERSON; FIRE WATCHER; FENCE ERECTOR; GUARDRAIL ERECTOR; GARDENER, HORTICULTURAL AND LANDSCAPE LABORER; JETTING; LIMBER, BRUSH LOADER AND PILER; PAVEMENT MARKER (BUTTON SETTER); MAINTENANCE, REPAIR TRACK AND ROAD BEDS; STREETCAR AND RAILROAD CONSTRUCTION TRACK LABORER; TEMPORARY AIR AND WATER LINES, VICTAULIC OR SIMILAR; TOOL ROOM ATTENDANT (JOBSITE ONLY) (MARIN COUNTY) FOOTNOTES:

LABORERS WORKING OFF OR WITH OR FROM BOS'N CHAIRS, SWINGING SCAFFOLDS, BELTS SHALL RECEIVE $0.25 PER HOUR ABOVE THE APPLICABLE WAGE RATE. THIS SHALL NOT APPLY TO WORKERS ENTITLED TO RECEIVE THE WAGE RATE SET FORTH IN GROUP 1-A BELOW. SEWER CLEANERS SHALL RECEIVE $4.00 PER DAY ABOVE GROUP 1 WAGE RATES. ""SEWER CLEANER"" MEANS ANY WORKER WHO HANDLES OR COMES IN CONTACT WITH RAW SEWAGE IN SMALL DIAMETER SEWERS. THOSE WHO WORK INSIDE RECENTLY ACTIVE, LARGE DIAMETER SEWERS, AND ALL RECENTLY ACTIVE SEWER MANHOLES SHAL RECEIVE $5.00 PER DAY ABOVE GROUP 1 WAGE RATES. MAINTENANCE AND REPAIR TRACK AND ROAD BEDS. ALL EMPLOYEES PERFORMING WORK COVERED HEREIN SHALL RECEIVE $ .25 PER HOUR ABOVE THEIR REGULAR RATE FOR ALL WORK PERFORMED ON UNDERGROUND STRUCTURES NOT SPECIFICALLY COVERED HEREIN. THIS PARAGRAPH SHALL NOT BE CONSTRUED TO APPLY TO WORK BELOW GROUND LEVEL IN OPEN CUT. IT SHALL APPLY TO CUT AND COVER WORK OF SUBWAY CONSTRUCTION AFTER THE TEMPORARY COVER HAS BEEN PLACED.....$ 36.25 27.30

LABORER, CONSTRUCTION CRAFT LABORERS - AREA A: GROUP 2 ASPHALT SHOVELER; CEMENT DUMPER AND HANDLING DRY CEMENT OR GYPSUM; CHOKE-SETTER AND RIGGER (CLEARING WORK); CONCRETE BUCKET DUMPER AND CHUTE; CONCRETE CHIPPING AND GRINDING; CONCRETE LABORER (WET OR DRY); DRILLER TENDER, CHUCK TENDER, NIPPER; GUINEA CHASER (STAKE), GROUT CREW; HIGH PRESSURE NOZZLE, ADDUCTOR; HYDRAULIC MONITOR (OVER 100 LBS. PRESSURE); LOADING AND UNLOADING, CARRYING AND HAULING OF ALL RODS AND MATERIALS FOR USE IN REINFORCING CONCRETE CONSTRUCTION; PITTSBURGH CHIPPER AND SIMILAR TYPE BRUSH SHREDDERS; SLOPER; SINGLE FOOT, HAND-HELD, PNEUMATIC TAMPER; ALL PNEUMATIC, AIR, GAS AND ELECTRIC TOOLS NOT LISTED IN GROUPS 1 THROUGH 1-F; JACKING OF PIPE - UNDER 12 INCHES (MARIN COUNTY) FOOTNOTES: LABORERS WORKING OFF OR WITH OR FROM BOS'N CHAIRS, SWINGING SCAFFOLDS, BELTS SHALL RECEIVE $0.25 PER HOUR ABOVE THE APPLICABLE WAGE RATE. THIS SHALL NOT APPLY TO WORKERS ENTITLED TO RECEIVE THE WAGE RATE SET FORTH IN GROUP 1-A BELOW. SEWER CLEANERS SHALL RECEIVE $4.00 PER DAY ABOVE GROUP 1 WAGE RATES. ""SEWER CLEANER"" MEANS ANY WORKER WHO HANDLES OR COMES IN CONTACT WITH RAW SEWAGE IN SMALL DIAMETER SEWERS. THOSE WHO WORK INSIDE RECENTLY ACTIVE, LARGE DIAMETER SEWERS, AND ALL RECENTLY ACTIVE SEWER MANHOLES SHAL RECEIVE $5.00 PER DAY ABOVE GROUP 1 WAGE RATES. MAINTENANCE AND REPAIR TRACK AND ROAD BEDS. ALL EMPLOYEES PERFORMING WORK COVERED HEREIN SHALL RECEIVE $ .25 PER HOUR ABOVE THEIR REGULAR RATE FOR ALL WORK PERFORMED ON UNDERGROUND STRUCTURES NOT SPECIFICALLY COVERED HEREIN. THIS PARAGRAPH SHALL NOT BE CONSTRUED TO APPLY TO WORK BELOW GROUND LEVEL IN OPEN CUT. IT SHALL APPLY TO CUT AND COVER WORK OF SUBWAY CONSTRUCTION AFTER THE TEMPORARY COVER HAS BEEN PLACED.....$ 36.35 27.30

LABORER, CONSTRUCTION CRAFT LABORERS - AREA A: GROUP 1-E WORK ON AND/OR IN BELL HOLE FOOTINGS AND SHAFTS THEREOF, AND WORK ON AND IN DEEP FOOTINGS. (A DEEP FOOTING IS A HOLE 15 FEET OR MORE IN DEPTH.) IN THE EVENT THE DEPTH OF THE FOOTING IS UNKNOWN AT THE COMMENCEMENT OF EXCAVATION, AND THE FINAL DEPTH EXCEEDS 15 FEET, THE DEEP FOOTING WAGE RATE WOULD APPLY TO ALL EMPLOYEES FOR EACH AND

EVERY DAY WORKED ON OR IN THE EXCAVATION OF THE FOOTING FROM THE DATE OF INCEPTION. (MARIN COUNTY)
FOOTNOTES: LABORERS WORKING OFF OR WITH OR FROM BOS'N CHAIRS, SWINGING SCAFFOLDS, BELTS SHALL RECEIVE $0.25 PER HOUR ABOVE THE APPLICABLE WAGE RATE. THIS SHALL NOT APPLY TO WORKERS ENTITLED TO RECEIVE THE WAGE RATE SET FORTH IN GROUP 1-A BELOW.
SEWER CLEANERS SHALL RECEIVE $4.00 PER DAY ABOVE GROUP 1 WAGE RATES. ""SEWER CLEANER"" MEANS ANY WORKER WHO HANDLES OR COMES IN CONTACT WITH RAW SEWAGE IN SMALL DIAMETER SEWERS. THOSE WHO WORK INSIDE RECENTLY ACTIVE, LARGE DIAMETER SEWERS, AND ALL RECENTLY ACTIVE SEWER MANHOLES SHAL RECEIVE $5.00 PER DAY ABOVE GROUP 1 WAGE RATES.
MAINTENANCE AND REPAIR TRACK AND ROAD BEDS. ALL EMPLOYEES PERFORMING WORK COVERED HEREIN SHALL RECEIVE $ .25 PER HOUR ABOVE THEIR REGULAR RATE FOR ALL WORK PERFORMED ON UNDERGROUND STRUCTURES NOT SPECIFICALLY COVERED HEREIN. THIS PARAGRAPH SHALL NOT BE CONSTRUED TO APPLY TO WORK BELOW GROUND LEVEL IN OPEN CUT. IT SHALL APPLY TO CUT AND COVER WORK OF SUBWAY CONSTRUCTION AFTER THE TEMPORARY COVER HAS BEEN PLACED.....$ 37.05 27.30

LABORER, CONSTRUCTION CRAFT LABORERS - AREA A: GROUP 1-C BURNING AND WELDING IN CONNECTION WITH LABORERS' WORK; SYNTHETIC THERMOPLASTICS AND SIMILAR TYPE WELDING(MARIN COUNTY) FOOTNOTES: LABORERS WORKING OFF OR WITH OR FROM BOS'N CHAIRS, SWINGING SCAFFOLDS, BELTS SHALL RECEIVE $0.25 PER HOUR ABOVE THE APPLICABLE WAGE RATE. THIS SHALL NOT APPLY TO WORKERS ENTITLED TO RECEIVE THE WAGE RATE SET FORTH IN GROUP 1-A BELOW. SEWER CLEANERS SHALL RECEIVE $4.00 PER DAY ABOVE GROUP 1 WAGE RATES. ""SEWER CLEANER"" MEANS ANY WORKER WHO HANDLES OR COMES IN CONTACT WITH RAW SEWAGE IN SMALL DIAMETER SEWERS. THOSE WHO WORK INSIDE RECENTLY ACTIVE, LARGE DIAMETER SEWERS, AND ALL RECENTLY ACTIVE SEWER MANHOLES SHAL RECEIVE $5.00 PER DAY ABOVE GROUP 1 WAGE RATES. MAINTENANCE AND REPAIR TRACK AND ROAD BEDS. ALL EMPLOYEES PERFORMING WORK COVERED HEREIN SHALL RECEIVE $ .25 PER HOUR ABOVE THEIR REGULAR RATE FOR ALL WORK PERFORMED ON UNDERGROUND STRUCTURES NOT SPECIFICALLY COVERED HEREIN. THIS PARAGRAPH SHALL NOT BE CONSTRUED TO APPLY TO WORK BELOW GROUND LEVEL IN OPEN CUT. IT SHALL APPLY TO CUT AND COVER WORK OF SUBWAY CONSTRUCTION AFTER THE TEMPORARY COVER HAS BEEN PLACED.....$ 36.55 27.30

LABORER, CONSTRUCTION CRAFT LABORERS - AREA A: GROUP 1-A JOY DRILL MODEL TWM-2A; GARDNER-DENVER MODEL DH143 AND SIMILAR TYPE DRILLS; TRACK DRILLER; JACK LEG DRILLER; WAGON DRILLER; MECHANICAL DRILLERS, ALL TYPES REGARDLESS OF TYPE OR METHOD OF POWER; MECHANICAL PIPE LAYERS, ALL TYPES REGARDLESS OF TYPE OR METHOD OF POWER; BLASTER AND POWDER; ALL WORK OF LOADING, PLACING AND BLASTING OF ALL POWDER AND EXPLOSIVES OF WHATEVER TYPE REGARDLESS OF METHOD USED FOR SUCH LOADING AND PLACING; HIGH SCALERS (INCLUDING DRILLING OF SAME); TREE TOPPER; BIT GRINDER (MARIN COUNTY) SEWER CLEANERS SHALL RECEIVE $4.00 PER DAY ABOVE GROUP 1 WAGE RATES. ""SEWER CLEANER"" MEANS ANY WORKER WHO HANDLES OR COMES IN CONTACT WITH RAW SEWAGE IN SMALL DIAMETER SEWERS. THOSE WHO WORK INSIDE RECENTLY ACTIVE, LARGE DIAMETER SEWERS, AND ALL

RECENTLY ACTIVE SEWER MANHOLES SHAL RECEIVE $5.00 PER DAY ABOVE GROUP 1 WAGE RATES. MAINTENANCE AND REPAIR TRACK AND ROAD BEDS. ALL EMPLOYEES PERFORMING WORK COVERED HEREIN SHALL RECEIVE $ .25 PER HOUR ABOVE THEIR REGULAR RATE FOR ALL WORK PERFORMED ON UNDERGROUND STRUCTURES NOT SPECIFICALLY COVERED HEREIN. THIS PARAGRAPH SHALL NOT BE CONSTRUED TO APPLY TO WORK BELOW GROUND LEVEL IN OPEN CUT. IT SHALL APPLY TO CUT AND COVER WORK OF SUBWAY CONSTRUCTION AFTER THE TEMPORARY COVER HAS BEEN PLACED.....$ 36.72 27.30

LABORER, CONSTRUCTION CRAFT LABORERS - AREA A: CONSTRUCTION SPECIALIST GROUP ASPHALT IRONER AND RAKER; CHAINSAW; LASER BEAM IN CONNECTION WITH LABORERS' WORK; CAST-IN- PLACE MANHOLE FORM SETTER; PRESSURE PIPELAYER; DAVIS TRENCHER - 300 OR SIMILAR TYPE (AND ALL SMALL TRENCHERS); BLASTER; DIAMOND DRILLER; MULTIPLE UNIT DRILL; HYDRAULIC DRILL MARIN COUNTY FOOTNOTES: LABORERS WORKING OFF OR WITH OR FROM BOS'N CHAIRS, SWINGING SCAFFOLDS, BELTS SHALL RECEIVE $0.25 PER HOUR ABOVE THE APPLICABLE WAGE RATE. THIS SHALL NOT APPLY TO WORKERS ENTITLED TO RECEIVE THE WAGE RATE SET FORTH IN GROUP 1-A BELOW. SEWER CLEANERS SHALL RECEIVE $4.00 PER DAY ABOVE GROUP 1 WAGE RATES. ""SEWER CLEANER"" MEANS ANY WORKER WHO HANDLES OR COMES IN CONTACT WITH RAW SEWAGE IN SMALL DIAMETER SEWERS. THOSE WHO WORK INSIDE RECENTLY ACTIVE, LARGE DIAMETER SEWERS, AND ALL RECENTLY ACTIVE SEWER MANHOLES SHAL RECEIVE $5.00 PER DAY ABOVE GROUP 1 WAGE RATES. MAINTENANCE AND REPAIR TRACK AND ROAD BEDS. ALL EMPLOYEES PERFORMING WORK COVERED HEREIN SHALL RECEIVE $ .25 PER HOUR ABOVE THEIR REGULAR RATE FOR ALL WORK PERFORMED ON UNDERGROUND STRUCTURES NOT SPECIFICALLY COVERED HEREIN. THIS PARAGRAPH SHALL NOT BE CONSTRUED TO APPLY TO WORK BELOW GROUND LEVEL IN OPEN CUT. IT SHALL APPLY TO CUT AND COVER WORK OF SUBWAY CONSTRUCTION AFTER THE TEMPORARY COVER HAS BEEN PLACED. .....$ 37.20 27.30

LABO0324-004 07/01/2023

	Rates	Fringes
LABORER, TRAFFIC CONTROL/LANE CLOSURE: TRAFFIC CONTROL PERSON II INSTALLATION AND REMOVAL OF TEMPORARY/PERMANENT SIGNS, MARKERS, DELINEATORS AND CRASH CUSHIONS. NAPA, SOLANO, AND SONOMA, COUNTIES.	$ 34.06	27.30
LABORER, TRAFFIC CONTROL/LANE CLOSURE: TRAFFIC CONTROL PERSON I LAYOUT OF TRAFFIC CONTROL, CRASH CUSHIONS, CONSTRUCTION AREA AND ROADSIDE SIGNAGE. NAPA, SOLANO, AND SONOMA, COUNTIES.....	$ 36.56	27.30
LABORER, TRAFFIC CONTROL/LANE CLOSURE: ESCORT DRIVER, FLAG PERSON NAPA, SOLANO, AND SONOMA, COUNTIES.....	$ 36.26	27.30

LABO0324-008 06/26/2023

	Rates	Fringes
TUNNEL AND SHAFT LABORERS: SHOTCRETE SPECIALIST NAPA, SOLANO, AND SONOMA COUNTIES.....	$ 46.41	27.72
TUNNEL AND SHAFT LABORERS: GROUP 5 GROUT CREW; REBOUNDMAN; SWAMPER/ BRAKEMAN (NAPA, SOLANO, AND SONOMA COUNTIES).....	$ 44.42	27.72
TUNNEL AND SHAFT LABORERS: GROUP 4 VIBRATOR		

OPERATOR, PAVEMENT BREAKER; BULL GANG - MUCKERS, TRACKMEN; CONCRETE CREW - INCLUDES RODDING AND SPREADING, DUMPMEN (ANY METHOD) (NAPA, SOLANO, AND SONOMA COUNTIES).....$ 44.96 27.72

TUNNEL AND SHAFT LABORERS: GROUP 3 BIT GRINDER; BLASTER, DRILLER, POWDERMEN, HEADING; CHERRY PICKERMEN - WHERE CAR IS LIFTED; CONCRETE FINISHER IN TUNNEL; CONCRETE SCREEDMAN; GROUT PUMPMAN AND POTMAN; GUNITE & SHOTCRETE GUNMAN & POTMAN; HEADERMEN; HIGH PRESSURE NOZZLEMAN; MINER - TUNNEL, INCLUDING TOP AND BOTTOM MAN ON SHAFT AND RAISE WORK; NIPPER; NOZZLEMAN ON SLICK LINE; SANDBLASTER - POTMAN, ROBOTIC SHOTCRETE PLACER, SEGMENT ERECTOR, TUNNEL MUCK HAULER, STEEL FORM RAISER AND SETTER; TIMBERMAN, RETIMBERMAN (WOOD OR STEEL OR SUBSTITUTE MATERIALS THEREFORE); TUGGER (FOR TUNNEL LABORER WORK); CABLE TENDER; CHUCK TENDER; POWDERMAN - PRIMER HOUSE (NAPA, SOLANO, AND SONOMA COUNTIES).....$ 45.41 27.72

TUNNEL AND SHAFT LABORERS: GROUP 2 RODMEN; SHAFT WORK & RAISE (BELOW ACTUAL OR EXCAVATED GROUND LEVEL) (NAPA, SOLANO, AND SONOMA COUNTIES).....$ 45.66 27.72

TUNNEL AND SHAFT LABORERS: GROUP 1 DIAMOND DRILLER; GROUNDMEN; GUNITE AND SHOTCRETE NOZZLEMEN (NAPA, SOLANO, AND SONOMA COUNTIES).....$ 45.89 27.72

LABO0324-010 07/01/2023

	Rates	Fringes
LABORER: MASON TENDER-BRICK SOLANO AND SONOMA COUNTIES	$ 36.84	26.24

LABO0324-013 06/26/2023

	Rates	Fringes
LABORER: GARDENERS, HORTICULTURAL & LANDSCAPE LABORERS - AREA B: (NAPA, SOLANO, AND SONOMA COUNTIES)- (2) Establishment Warranty Period	$ 28.94	27.30
LABORER: GARDENERS, HORTICULTURAL & LANDSCAPE LABORERS - AREA B: (NAPA, SOLANO, AND SONOMA COUNTIES)- (1) New Construction	$ 35.25	27.30
LABORER, WRECKING - AREA B:: GROUP 1 (NAPA, SOLANO, AND SONOMA COUNTIES)	$ 35.50	27.30
LABORER, WRECKING - AREA B: GROUP 2 Semi-skilled wrecker (salvaging of other building materials) NAPA, SOLANO, AND SONOMA COUNTIES) FOOTNOTES: LABORERS WORKING OFF OR WITH OR FROM BOS'N CHAIRS, SWINGING SCAFFOLDS, BELTS SHALL RECEIVE $0.25 PER HOUR ABOVE THE APPLICABLE WAGE RATE. THIS SHALL NOT APPLY TO WORKERS ENTITLED TO RECEIVE THE WAGE RATE SET FORTH IN GROUP 1-A BELOW	$ 35.35	27.30
LABORER, GUNITE - AREA B:: GROUP 1 (NAPA, SOLANO, AND SONOMA COUNTIES)	$ 36.46	27.30
LABORER, GUNITE - AREA B: GROUP 4 GUNITE LABORER (NAPA, SOLANO, AND SONOMA COUNTIES) FOOTNOTES: LABORERS WORKING OFF OR WITH OR FROM BOS'N CHAIRS, SWINGING SCAFFOLDS, BELTS SHALL RECEIVE $0.25 PER HOUR ABOVE THE APPLICABLE WAGE RATE. THIS SHALL NOT APPLY TO WORKERS ENTITLED TO RECEIVE THE WAGE RATE SET FORTH IN GROUP 1-A BELOW	$ 35.25	27.30
LABORER, GUNITE - AREA B: GROUP 3 REBOUNDMAN (NAPA, SOLANO, AND SONOMA COUNTIES) FOOTNOTES: LABORERS WORKING OFF OR WITH OR FROM BOS'N CHAIRS, SWINGING SCAFFOLDS, BELTS SHALL RECEIVE $0.25 PER HOUR ABOVE THE APPLICABLE WAGE RATE. THIS SHALL		

NOT APPLY TO WORKERS ENTITLED TO RECEIVE THE WAGE RATE SET FORTH IN GROUP 1-A BELOW.....$ 35.37 27.30

LABORER, GUNITE - AREA B: GROUP 2 NOZZLEMAN, GUNMAN, POTMAN, GROUNDMAN (NAPA, SOLANO, AND SONOMA COUNTIES) FOOTNOTES: LABORERS WORKING OFF OR WITH OR FROM BOS'N CHAIRS, SWINGING SCAFFOLDS, BELTS SHALL RECEIVE $0.25 PER HOUR ABOVE THE APPLICABLE WAGE RATE. THIS SHALL NOT APPLY TO WORKERS ENTITLED TO RECEIVE THE WAGE RATE SET FORTH IN GROUP 1-A BELOW. .....$ 35.96 27.30

LABORER, CONSTRUCTION CRAFT LABORERS - AREA B: GROUP 4 FINAL CLEAN-UP WORK OF DEBRIS, GROUNDS AND BUILDING INCLUDING BUT NOT LIMITED TO: STREET CLEANER; CLEANING AND WASHING WINDOWS; BRICK CLEANER (JOBSITE ONLY); MATERIAL CLEANER (JOBSITE ONLY). THE CLASSIFICATION ""MATERIAL CLEANER"" IS TO BE UTILIZED UNDER THE FOLLOWING CONDITIONS: A: AT DEMOLITION SITE FOR THE SALVAGE OF THE MATERIAL. B: AT THE CONCLUSION OF A JOB WHERE THE MATERIAL IS TO BE SALVAGED AND STOCKED TO BE REUSED ON ANOTHER JOB. C: FOR THE CLEANING OF SALVAGE MATERIAL AT THE JOBSITE OR TEMPORARY JOBSITE YARD. THE MATERIAL CLEANER CLASSIFICATION SHOULD NOT BE USED IN THE PERFORMANCE OF ""FORM STRIPPING, CLEANING AND OILING AND MOVING TO THE NEXT POINT OF ERECTION"". (NAPA, SOLANO, AND SONOMA COUNTIES) FOOTNOTES: LABORERS WORKING OFF OR WITH OR FROM BOS'N CHAIRS, SWINGING SCAFFOLDS, BELTS SHALL RECEIVE $0.25 PER HOUR ABOVE THE APPLICABLE WAGE RATE. THIS SHALL NOT APPLY TO WORKERS ENTITLED TO RECEIVE THE WAGE RATE SET FORTH IN GROUP 1-A BELOW. SEWER CLEANERS SHALL RECEIVE $4.00 PER DAY ABOVE GROUP 1 WAGE RATES. ""SEWER CLEANER"" MEANS ANY WORKER WHO HANDLES OR COMES IN CONTACT WITH RAW SEWAGE IN SMALL DIAMETER SEWERS. THOSE WHO WORK INSIDE RECENTLY ACTIVE, LARGE DIAMETER SEWERS, AND ALL RECENTLY ACTIVE SEWER MANHOLES SHAL RECEIVE $5.00 PER DAY ABOVE GROUP 1 WAGE RATES. MAINTENANCE AND REPAIR TRACK AND ROAD BEDS. ALL EMPLOYEES PERFORMING WORK COVERED HEREIN SHALL RECEIVE $ .25 PER HOUR ABOVE THEIR REGULAR RATE FOR ALL WORK PERFORMED ON UNDERGROUND STRUCTURES NOT SPECIFICALLY COVERED HEREIN. THIS PARAGRAPH SHALL NOT BE CONSTRUED TO APPLY TO WORK BELOW GROUND LEVEL IN OPEN CUT. IT SHALL APPLY TO CUT AND COVER WORK OF SUBWAY CONSTRUCTION AFTER THE TEMPORARY COVER HAS BEEN PLACED.....$ 28.94 27.30

LABORER, CONSTRUCTION CRAFT LABORERS - AREA B: GROUP 3 CONSTRUCTION LABORERS, INCLUDING BRIDGE AND GENERAL LABORER; DUMP, LOAD SPOTTER; FLAG PERSON; FIRE WATCHER; FENCE ERECTOR; GUARDRAIL ERECTOR; GARDENER, HORTICULTURAL AND LANDSCAPE LABORER; JETTING; LIMBER, BRUSH LOADER AND PILER; PAVEMENT MARKER (BUTTON SETTER); MAINTENANCE, REPAIR TRACK AND ROAD BEDS; STREETCAR AND RAILROAD CONSTRUCTION TRACK LABORER; TEMPORARY AIR AND WATER LINES, VICTAULIC OR SIMILAR; TOOL ROOM ATTENDANT (JOBSITE ONLY) (NAPA, SOLANO, AND SONOMA COUNTIES) FOOTNOTES: LABORERS WORKING OFF OR WITH OR FROM BOS'N CHAIRS, SWINGING SCAFFOLDS, BELTS SHALL RECEIVE $0.25 PER HOUR ABOVE THE APPLICABLE WAGE RATE. THIS SHALL NOT APPLY TO WORKERS ENTITLED TO RECEIVE THE WAGE RATE SET FORTH IN GROUP 1-A BELOW. SEWER CLEANERS SHALL RECEIVE $4.00 PER DAY ABOVE

GROUP 1 WAGE RATES. ""SEWER CLEANER"" MEANS ANY WORKER WHO HANDLES OR COMES IN CONTACT WITH RAW SEWAGE IN SMALL DIAMETER SEWERS. THOSE WHO WORK INSIDE RECENTLY ACTIVE, LARGE DIAMETER SEWERS, AND ALL RECENTLY ACTIVE SEWER MANHOLES SHAL RECEIVE $5.00 PER DAY ABOVE GROUP 1 WAGE RATES.
MAINTENANCE AND REPAIR TRACK AND ROAD BEDS. ALL EMPLOYEES PERFORMING WORK COVERED HEREIN SHALL RECEIVE $ .25 PER HOUR ABOVE THEIR REGULAR RATE FOR ALL WORK PERFORMED ON UNDERGROUND STRUCTURES NOT SPECIFICALLY COVERED HEREIN. THIS PARAGRAPH SHALL NOT BE CONSTRUED TO APPLY TO WORK BELOW GROUND LEVEL IN OPEN CUT. IT SHALL APPLY TO CUT AND COVER WORK OF SUBWAY CONSTRUCTION AFTER THE TEMPORARY COVER HAS BEEN PLACED.....$ 35.25 27.30

LABORER, CONSTRUCTION CRAFT LABORERS - AREA B:
GROUP 2 ASPHALT SHOVELER; CEMENT DUMPER AND HANDLING DRY CEMENT OR GYPSUM; CHOKE-SETTER AND RIGGER (CLEARING WORK); CONCRETE BUCKET DUMPER AND CHUTE; CONCRETE CHIPPING AND GRINDING; CONCRETE LABORER (WET OR DRY); DRILLER TENDER, CHUCK TENDER, NIPPER; GUINEA CHASER (STAKE), GROUT CREW; HIGH PRESSURE NOZZLE, ADDUCTOR; HYDRAULIC MONITOR (OVER 100 LBS. PRESSURE); LOADING AND UNLOADING, CARRYING AND HAULING OF ALL RODS AND MATERIALS FOR USE IN REINFORCING CONCRETE CONSTRUCTION; PITTSBURGH CHIPPER AND SIMILAR TYPE BRUSH SHREDDERS; SLOPER; SINGLE FOOT, HAND-HELD, PNEUMATIC TAMPER; ALL PNEUMATIC, AIR, GAS AND ELECTRIC TOOLS NOT LISTED IN GROUPS 1 THROUGH 1-F; JACKING OF PIPE - UNDER 12 INCHES (NAPA, SOLANO, AND SONOMA COUNTIES)
FOOTNOTES: LABORERS WORKING OFF OR WITH OR FROM BOS'N CHAIRS, SWINGING SCAFFOLDS, BELTS SHALL RECEIVE $0.25 PER HOUR ABOVE THE APPLICABLE WAGE RATE. THIS SHALL NOT APPLY TO WORKERS ENTITLED TO RECEIVE THE WAGE RATE SET FORTH IN GROUP 1-A BELOW. SEWER CLEANERS SHALL RECEIVE $4.00 PER DAY ABOVE GROUP 1 WAGE RATES. ""SEWER CLEANER"" MEANS ANY WORKER WHO HANDLES OR COMES IN CONTACT WITH RAW SEWAGE IN SMALL DIAMETER SEWERS. THOSE WHO WORK INSIDE RECENTLY ACTIVE, LARGE DIAMETER SEWERS, AND ALL RECENTLY ACTIVE SEWER MANHOLES SHAL RECEIVE $5.00 PER DAY ABOVE GROUP 1 WAGE RATES.
MAINTENANCE AND REPAIR TRACK AND ROAD BEDS. ALL EMPLOYEES PERFORMING WORK COVERED HEREIN SHALL RECEIVE $ .25 PER HOUR ABOVE THEIR REGULAR RATE FOR ALL WORK PERFORMED ON UNDERGROUND STRUCTURES NOT SPECIFICALLY COVERED HEREIN. THIS PARAGRAPH SHALL NOT BE CONSTRUED TO APPLY TO WORK BELOW GROUND LEVEL IN OPEN CUT. IT SHALL APPLY TO CUT AND COVER WORK OF SUBWAY CONSTRUCTION AFTER THE TEMPORARY COVER HAS BEEN PLACED.....$ 35.35 27.30

LABORER, CONSTRUCTION CRAFT LABORERS - AREA B:
GROUP 1-F WIRE WINDING MACHINE IN CONNECTION WITH GUNITING OR SHOT CRETE (NAPA, SOLANO, AND SONOMA COUNTIES) FOOTNOTES: LABORERS WORKING OFF OR WITH OR FROM BOS'N CHAIRS, SWINGING SCAFFOLDS, BELTS SHALL RECEIVE $0.25 PER HOUR ABOVE THE APPLICABLE WAGE RATE. THIS SHALL NOT APPLY TO WORKERS ENTITLED TO RECEIVE THE WAGE RATE SET FORTH IN GROUP 1-A BELOW. SEWER CLEANERS SHALL RECEIVE $4.00 PER DAY ABOVE GROUP 1 WAGE RATES. ""SEWER CLEANER"" MEANS ANY WORKER WHO HANDLES OR COMES IN CONTACT WITH RAW SEWAGE IN SMALL DIAMETER SEWERS. THOSE WHO WORK INSIDE RECENTLY ACTIVE, LARGE

DIAMETER SEWERS, AND ALL RECENTLY ACTIVE SEWER MANHOLES SHAL RECEIVE $5.00 PER DAY ABOVE GROUP 1 WAGE RATES. MAINTENANCE AND REPAIR TRACK AND ROAD BEDS. ALL EMPLOYEES PERFORMING WORK COVERED HEREIN SHALL RECEIVE $ .25 PER HOUR ABOVE THEIR REGULAR RATE FOR ALL WORK PERFORMED ON UNDERGROUND STRUCTURES NOT SPECIFICALLY COVERED HEREIN. THIS PARAGRAPH SHALL NOT BE CONSTRUED TO APPLY TO WORK BELOW GROUND LEVEL IN OPEN CUT. IT SHALL APPLY TO CUT AND COVER WORK OF SUBWAY CONSTRUCTION AFTER THE TEMPORARY COVER HAS BEEN PLACED.....$ 36.08 27.30

LABORER, CONSTRUCTION CRAFT LABORERS - AREA B: GROUP 1-E WORK ON AND/OR IN BELL HOLE FOOTINGS AND SHAFTS THEREOF, AND WORK ON AND IN DEEP FOOTINGS. (A DEEP FOOTING IS A HOLE 15 FEET OR MORE IN DEPTH.) IN THE EVENT THE DEPTH OF THE FOOTING IS UNKNOWN AT THE COMMENCEMENT OF EXCAVATION, AND THE FINAL DEPTH EXCEEDS 15 FEET, THE DEEP FOOTING WAGE RATE WOULD APPLY TO ALL EMPLOYEES FOR EACH AND EVERY DAY WORKED ON OR IN THE EXCAVATION OF THE FOOTING FROM THE DATE OF INCEPTION. (NAPA, SOLANO, AND SONOMA COUNTIES) FOOTNOTES: LABORERS WORKING OFF OR WITH OR FROM BOS'N CHAIRS, SWINGING SCAFFOLDS, BELTS SHALL RECEIVE $0.25 PER HOUR ABOVE THE APPLICABLE WAGE RATE. THIS SHALL NOT APPLY TO WORKERS ENTITLED TO RECEIVE THE WAGE RATE SET FORTH IN GROUP 1-A BELOW. SEWER CLEANERS SHALL RECEIVE $4.00 PER DAY ABOVE GROUP 1 WAGE RATES. ""SEWER CLEANER"" MEANS ANY WORKER WHO HANDLES OR COMES IN CONTACT WITH RAW SEWAGE IN SMALL DIAMETER SEWERS. THOSE WHO WORK INSIDE RECENTLY ACTIVE, LARGE DIAMETER SEWERS, AND ALL RECENTLY ACTIVE SEWER MANHOLES SHAL RECEIVE $5.00 PER DAY ABOVE GROUP 1 WAGE RATES. MAINTENANCE AND REPAIR TRACK AND ROAD BEDS. ALL EMPLOYEES PERFORMING WORK COVERED HEREIN SHALL RECEIVE $ .25 PER HOUR ABOVE THEIR REGULAR RATE FOR ALL WORK PERFORMED ON UNDERGROUND STRUCTURES NOT SPECIFICALLY COVERED HEREIN. THIS PARAGRAPH SHALL NOT BE CONSTRUED TO APPLY TO WORK BELOW GROUND LEVEL IN OPEN CUT. IT SHALL APPLY TO CUT AND COVER WORK OF SUBWAY CONSTRUCTION AFTER THE TEMPORARY COVER HAS BEEN PLACED.....$ 36.05 27.30

LABORER, CONSTRUCTION CRAFT LABORERS - AREA B: GROUP 1-C BURNING AND WELDING IN CONNECTION WITH LABORERS' WORK; SYNTHETIC THERMOPLASTICS AND SIMILAR TYPE WELDING (NAPA, SOLANO, AND SONOMA COUNTIES) FOOTNOTES: LABORERS WORKING OFF OR WITH OR FROM BOS'N CHAIRS, SWINGING SCAFFOLDS, BELTS SHALL RECEIVE $0.25 PER HOUR ABOVE THE APPLICABLE WAGE RATE. THIS SHALL NOT APPLY TO WORKERS ENTITLED TO RECEIVE THE WAGE RATE SET FORTH IN GROUP 1-A BELOW. SEWER CLEANERS SHALL RECEIVE $4.00 PER DAY ABOVE GROUP 1 WAGE RATES. ""SEWER CLEANER"" MEANS ANY WORKER WHO HANDLES OR COMES IN CONTACT WITH RAW SEWAGE IN SMALL DIAMETER SEWERS. THOSE WHO WORK INSIDE RECENTLY ACTIVE, LARGE DIAMETER SEWERS, AND ALL RECENTLY ACTIVE SEWER MANHOLES SHAL RECEIVE $5.00 PER DAY ABOVE GROUP 1 WAGE RATES. MAINTENANCE AND REPAIR TRACK AND ROAD BEDS. ALL EMPLOYEES PERFORMING WORK COVERED HEREIN SHALL RECEIVE $ .25 PER HOUR ABOVE THEIR REGULAR RATE FOR ALL WORK PERFORMED ON UNDERGROUND STRUCTURES NOT SPECIFICALLY COVERED HEREIN. THIS PARAGRAPH SHALL NOT BE CONSTRUED TO APPLY TO WORK BELOW GROUND LEVEL IN OPEN CUT. IT SHALL APPLY TO

CUT AND COVER WORK OF SUBWAY CONSTRUCTION AFTER THE TEMPORARY COVER HAS BEEN PLACED.....$ 35.55 27.30

LABORER, CONSTRUCTION CRAFT LABORERS - AREA B: GROUP 1-A JOY DRILL MODEL TWM-2A; GARDNER-DENVER MODEL DH143 AND SIMILAR TYPE DRILLS; TRACK DRILLER; JACK LEG DRILLER; WAGON DRILLER; MECHANICAL DRILLERS, ALL TYPES REGARDLESS OF TYPE OR METHOD OF POWER; MECHANICAL PIPE LAYERS, ALL TYPES REGARDLESS OF TYPE OR METHOD OF POWER; BLASTER AND POWDER; ALL WORK OF LOADING, PLACING AND BLASTING OF ALL POWDER AND EXPLOSIVES OF WHATEVER TYPE REGARDLESS OF METHOD USED FOR SUCH LOADING AND PLACING; HIGH SCALERS (INCLUDING DRILLING OF SAME); TREE TOPPER; BIT GRINDER (NAPA, SOLANO, AND SONOMA COUNTIES) SEWER CLEANERS SHALL RECEIVE $4.00 PER DAY ABOVE GROUP 1 WAGE RATES. ""SEWER CLEANER"" MEANS ANY WORKER WHO HANDLES OR COMES IN CONTACT WITH RAW SEWAGE IN SMALL DIAMETER SEWERS. THOSE WHO WORK INSIDE RECENTLY ACTIVE, LARGE DIAMETER SEWERS, AND ALL RECENTLY ACTIVE SEWER MANHOLES SHAL RECEIVE $5.00 PER DAY ABOVE GROUP 1 WAGE RATES. MAINTENANCE AND REPAIR TRACK AND ROAD BEDS. ALL EMPLOYEES PERFORMING WORK COVERED HEREIN SHALL RECEIVE $ .25 PER HOUR ABOVE THEIR REGULAR RATE FOR ALL WORK PERFORMED ON UNDERGROUND STRUCTURES NOT SPECIFICALLY COVERED HEREIN. THIS PARAGRAPH SHALL NOT BE CONSTRUED TO APPLY TO WORK BELOW GROUND LEVEL IN OPEN CUT. IT SHALL APPLY TO CUT AND COVER WORK OF SUBWAY CONSTRUCTION AFTER THE TEMPORARY COVER HAS BEEN PLACED.....$ 35.72 27.30

LABORER, CONSTRUCTION CRAFT LABORERS - AREA B: GROUP 1- ASPHALT SPREADER BOXES (ALL TYPES); BARKO, WACKER AND SIMILAR TYPE TAMPERS; BUGGYMOBILE; CAULKER, BANDER, PIPEWRAPPER, CONDUIT LAYER, PLASTIC PIPELAYER; CERTIFIED HAZARDOUS WASTE WORKER INCLUDING LEADE ABATEMENT; COMPACTORS OF ALL TYPES; CONCRETE AND MAGNESITE MIXER, 1/2 YD. AND UNDER; CONCRETE PAN WORK; CONCRETE SANDER; CONCRETE SAW; CRIBBER AND/OR SHORING; CUT GRANITE CURB SETTER; DRI-PAK-IT MACHINE; FALLER, LOGLOADER AND BUCKER; FORM RAISER, SLIP FORMS; GREEN CUTTER; HEADERBOARD, HUBSETTER, ALIGNER, BY ANY METHOD; HIGH PRESSURE BLOW PIPE (1-1/2"" OR OVER, 100 LBS. PRESSURE/OVER); HYDRO SEEDER AND SIMILAR TYPE; JACKHAMMER OPERATOR; JACKING OF PIPE OVER 12 INCHES; JACKSON AND SIMILAR TYPE COMPACTOR; KETTLE TENDER, POT AND WORKER APPLYING ASPHALT, LAY-KOLD, CREOSOTE, LIME, CAUSTIC AND SIMILAR TYPE MATERIALS (APPLYING MEANS APPLYING, DIPPING OR HANDLING OF SUCH MATERIALS); LAGGING, SHEETING, WHALING, BRACING, TRENCHJACKING, LAGGING HAMMER; MAGNESITE, EPOXYRESIN, FIBERGLASS, MASTIC WORKER (WET OR DRY); NO JOINT PIPE AND STRIPPING OF SAME, INCLUDING REPAIR OF VOIDS; PAVEMENT BREAKER AND SPADER, INCLUDING TOOL GRINDER; PERMA CURB; PIPELAYER (INCLUDING GRADE CHECKING IN CONNECTION WITH PIPELAYING); PRECAST-MANHOLE SETTER; PRESSURE PIPE TESTER; POST HOLE DIGGER, AIR, GAS AND ELECTRIC; POWER BROOM SWEEPER; POWER TAMPERS OF ALL TYPES (EXCEPT AS SHOWN IN GROUP 2); RAM SET GUN AND STUD GUN; RIPRAP STONEPAVER AND ROCK-SLINGER, INCLUDING PLACING OF SACKED CONCRETE AND/OR SAND (WET OR DRY) AND GABIONS AND SIMILAR TYPE; ROTARY SCARIFIER OR MULTIPLE HEAD CONCRETE CHIPPING SCARIFIER; ROTO AND DITCH WITCH; ROTOTILLER; SANDBLASTER, POT, GUN,

NOZZLE OPERATORS; SIGNALLING AND RIGGING; TANK CLEANER; TREE CLIMBER; TURBO BLASTER; VIBRASCREED, BULL FLOAT IN CONNECTION WITH LABORERS' WORK; VIBRATOR; HAZARDOUS WASTE WORKER (LEAD REMOVAL); ASBESTOS AND MOLD REMOVAL WORKER (NAPA, SOLANO, AND SONOMA COUNTIES) FOOTNOTES: LABORERS WORKING OFF OR WITH OR FROM BOS'N CHAIRS, SWINGING SCAFFOLDS, BELTS SHALL RECEIVE $0.25 PER HOUR ABOVE THE APPLICABLE WAGE RATE. THIS SHALL NOT APPLY TO WORKERS ENTITLED TO RECEIVE THE WAGE RATE SET FORTH IN GROUP 1-A BELOW. SEWER CLEANERS SHALL RECEIVE $4.00 PER DAY ABOVE GROUP 1 WAGE RATES. ""SEWER CLEANER"" MEANS ANY WORKER WHO HANDLES OR COMES IN CONTACT WITH RAW SEWAGE IN SMALL DIAMETER SEWERS. THOSE WHO WORK INSIDE RECENTLY ACTIVE, LARGE DIAMETER SEWERS, AND ALL RECENTLY ACTIVE SEWER MANHOLES SHAL RECEIVE $5.00 PER DAY ABOVE GROUP 1 WAGE RATES. MAINTENANCE AND REPAIR TRACK AND ROAD BEDS. ALL EMPLOYEES PERFORMING WORK COVERED HEREIN SHALL RECEIVE $ .25 PER HOUR ABOVE THEIR REGULAR RATE FOR ALL WORK PERFORMED ON UNDERGROUND STRUCTURES NOT SPECIFICALLY COVERED HEREIN. THIS PARAGRAPH SHALL NOT BE CONSTRUED TO APPLY TO WORK BELOW GROUND LEVEL IN OPEN CUT. IT SHALL APPLY TO CUT AND COVER WORK OF SUBWAY CONSTRUCTION AFTER THE TEMPORARY COVER HAS BEEN PLACED.....$ 35.50 27.30

LABORER, CONSTRUCTION CRAFT LABORERS - AREA B: CONSTRUCTION SPECIALIST GROUP ASPHALT IRONER AND RAKER; CHAINSAW; LASER BEAM IN CONNECTION WITH LABORERS' WORK; CAST-IN- PLACE MANHOLE FORM SETTER; PRESSURE PIPELAYER; DAVIS TRENCHER - 300 OR SIMILAR TYPE (AND ALL SMALL TRENCHERS); BLASTER; DIAMOND DRILLER; MULTIPLE UNIT DRILL; HYDRAULIC DRILL NAPA, SOLANO, AND SONOMA COUNTIES FOOTNOTES: LABORERS WORKING OFF OR WITH OR FROM BOS'N CHAIRS, SWINGING SCAFFOLDS, BELTS SHALL RECEIVE $0.25 PER HOUR ABOVE THE APPLICABLE WAGE RATE. THIS SHALL NOT APPLY TO WORKERS ENTITLED TO RECEIVE THE WAGE RATE SET FORTH IN GROUP 1-A BELOW.
SEWER CLEANERS SHALL RECEIVE $4.00 PER DAY ABOVE GROUP 1 WAGE RATES. ""SEWER CLEANER"" MEANS ANY WORKER WHO HANDLES OR COMES IN CONTACT WITH RAW SEWAGE IN SMALL DIAMETER SEWERS. THOSE WHO WORK INSIDE RECENTLY ACTIVE, LARGE DIAMETER SEWERS, AND ALL RECENTLY ACTIVE SEWER MANHOLES SHAL RECEIVE $5.00 PER DAY ABOVE GROUP 1 WAGE RATES.
MAINTENANCE AND REPAIR TRACK AND ROAD BEDS. ALL EMPLOYEES PERFORMING WORK COVERED HEREIN SHALL RECEIVE $ .25 PER HOUR ABOVE THEIR REGULAR RATE FOR ALL WORK PERFORMED ON UNDERGROUND STRUCTURES NOT SPECIFICALLY COVERED HEREIN. THIS PARAGRAPH SHALL NOT BE CONSTRUED TO APPLY TO WORK BELOW GROUND LEVEL IN OPEN CUT. IT SHALL APPLY TO CUT AND COVER WORK OF SUBWAY CONSTRUCTION AFTER THE TEMPORARY COVER HAS BEEN PLACED.....$ 36.20 27.30

PAIN0016-004 01/01/2025

	Rates	Fringes

PAINTERS MARIN, NAPA, SOLANO & SONOMA COUNTIES PREMIUMS: EXOTIC MATERIALS - $1.25 ADDITIONAL PER HOUR. SPRAY WORK: - $0.50 ADDITIONAL PER HOUR. INDUSTRIAL PAINTING - $0.25 ADDITIONAL PER HOUR [WORK ON INDUSTRIAL BUILDINGS USED FOR THE

MANUFACTURE AND PROCESSING OF GOODS FOR SALE OR SERVICE; STEEL CONSTRUCTION (BRIDGES), STACKS, TOWERS, TANKS, AND SIMILAR STRUCTURES] HIGH WORK: OVER 50 FEET - $2.00 PER HOUR ADDITIONAL 100 TO 180 FEET - $4.00 PER HOUR ADDITIONAL OVER 180 FEET - $6.00 PER HOUIR ADDITIONAL.....$ 53.38 28.04

PAIN0016-005 01/01/2025

	Rates	Fringes
DRYWALL FINISHER/TAPER ALPINE, BUTTE, COLUSA, EL DORADO (WEST OF THE SIERRA NEVADA MOUNTAINS), GLENN, LASSEN (WEST OF HWY. 395, EXCLUDING HONEY LAKE); MARIN, MODOC, NAPA, NEVADA (WEST OF THE SIERRA NEVADA MOUNTAINS), PLACER (WEST OF THE SIERRA NEVADA MOUNTAINS), PLUMAS, SACRAMENTO, SHASTA, SIERRA (WEST OF THE SIERRA NEVADA MOUNTAINS), SISKIYOU, SOLANO, SONOMA, SUTTER, TEHAMA, TRINITY, YOLO AND YUBA COUNTIES.....	$ 59.63	31.29

PAIN0016-007 01/01/2025

	Rates	Fringes
PAINTERS ALPINE, AMADOR, BUTTE, COLUSA. EL DORADO (WEST OF THE SIERRA NEVADA MOUNTAINS), GLENN, LASSEN (WEST OF HIGHWAY 395, EXCLUDING HONEY LAKE), MODOC, NEVADA (WEST OF THE SIERRA NEVADA MOUNTAINS), PLACER (WEST OF THE SIERRA NEVADA MOUNTAINS), PLUMAS, SACRAMENTO, SHASTA, SIERRA (WEST OF THE SIERRA NEVADA MOUNTAINS), SISKIYOU, SUTTER, TEHAMA, TRINITY, YOLO & YUBA COUNTIES SPRAY/SANDBLAST: $0.50 ADDITIONAL PER HOUR. EXOTIC MATERIALS: $1.25 ADDITIONAL PER HOUR. HIGH TIME: OVER 50 FT ABOVE GROUND OR WATER LEVEL $2.00 ADDITIONAL PER HOUR. 100 TO 180 FT ABOVE GROUND OR WATER LEVEL $4.00 ADDITIONAL PER HOUR. OVER 180 FT ABOVE GROUND OR WATER LEVEL $6.00 ADDITIONAL PER HOUR.....	$ 43.45	22.80

PAIN0016-008 01/01/2024

	Rates	Fringes
SOFT FLOOR LAYER MARIN, NAPA, SOLANO AND SONOMA COUNTIES.....	$ 59.00	33.03

PAIN0169-004 01/01/2024

	Rates	Fringes
GLAZIER MARIN , NAPA & SONOMA COUNTIES; SOLANO COUNTY (WEST OF A LINE DEFINED AS FOLLOWS: HWY. 80 CORRIDOR BEGINNING AT THE CITY OF FAIRFIELD, INCLUDING TRAVIS AIR FORCE BASE AND SUISUN CITY; GOING NORTH OF MANAKAS CORNER RD., CONTINUE NORTH ON SUISUN VALLEY RD. TO THE NAPA COUNTY LINE; HWY. 80 CORRIDOR SOUTH ON GRIZZLY ISLAND RD. TO THE GRIZZLY ISLAND MANAGEMENT AREA).....	$ 56.22	34.00

PAIN0567-001 07/01/2025

	Rates	Fringes
PAINTERS: SPRAY PAINTER EL DORADO COUNTY (EAST OF THE SIERRA NEVADA MOUNTAINS); LASSEN COUNTY (EAST OF HIGHWAY 395, BEGINNING AT STACEY AND INCLUDING HONEY LAKE); NEVADA COUNTY (EAST OF THE SIERRA NEVADA MOUNTAINS); PLACER COUNTY (EAST OF THE		

SIERRA NEVADA MOUNTAINS); AND SIERRA COUNTY (EAST OF THE SIERRA NEVADA MOUNTAINS) PREMIUMS: SPECIAL COATINGS (BRUSH), AND SANDBLASTING = $0.50/HR SPECIAL COATINGS (SPRAY), AND STEEPLEJACK = $1.00/HR SPECIAL COATING SPRAY STEEL = $1.25/HR SWING STAGE = $2.00/HR *A SPECIAL COATING IS A COATING THAT REQUIRES THE MIXING OF 2 OR MORE PRODUCTS.....$ 41.43 16.16

PAINTERS: PAPERHANGER (EL DORADO COUNTY (EAST OF THE SIERRA NEVADA MOUNTAINS); LASSEN COUNTY (EAST OF HIGHWAY 395, BEGINNING AT STACEY AND INCLUDING HONEY LAKE); NEVADA COUNTY (EAST OF THE SIERRA NEVADA MOUNTAINS); PLACER COUNTY (EAST OF THE SIERRA NEVADA MOUNTAINS); AND SIERRA COUNTY (EAST OF THE SIERRA NEVADA MOUNTAINS) PREMIUMS: SPECIAL COATINGS (BRUSH), AND SANDBLASTING = $0.50/HR SPECIAL COATINGS (SPRAY), AND STEEPLEJACK = $1.00/HR SPECIAL COATING SPRAY STEEL = $1.25/HR SWING STAGE = $2.00/HR *A SPECIAL COATING IS A COATING THAT REQUIRES THE MIXING OF 2 OR MORE PRODUCTS.....$ 42.19 16.16

PAINTERS: BRUSH AND ROLLER EL DORADO COUNTY (EAST OF THE SIERRA NEVADA MOUNTAINS); LASSEN COUNTY (EAST OF HIGHWAY 395, BEGINNING AT STACEY AND INCLUDING HONEY LAKE); NEVADA COUNTY (EAST OF THE SIERRA NEVADA MOUNTAINS); PLACER COUNTY (EAST OF THE SIERRA NEVADA MOUNTAINS); AND SIERRA COUNTY (EAST OF THE SIERRA NEVADA MOUNTAINS) PREMIUMS: SPECIAL COATINGS (BRUSH), AND SANDBLASTING = $0.50/HR SPECIAL COATINGS (SPRAY), AND STEEPLEJACK = $1.00/HR SPECIAL COATING SPRAY STEEL = $1.25/HR SWING STAGE = $2.00/HR *A SPECIAL COATING IS A COATING THAT REQUIRES THE MIXING OF 2 OR MORE PRODUCTS.....$ 39.43 16.16

PAIN0567-007 07/01/2022

	Rates	Fringes
SOFT FLOOR LAYER EL DORADO COUNTY (EAST OF THE SIERRA NEVADA MOUNTAINS); LASSEN COUNTY (EAST OF HIGHWAY 395, BEGINNING AT STACEY AND INCLUDING HONEY LAKE); NEVADA COUNTY (EAST OF THE SIERRA NEVADA MOUNTAINS); PLACER COUNTY (EAST OF THE SIERRA NEVADA MOUNTAINS) AND SIERRA COUNTY (EAST OF THE SIERRA NEVADA MOUNTAINS)).....	$ 34.27	16.47

PAIN0567-010 07/01/2024

	Rates	Fringes
DRYWALL: (2) STEEPLEJACK - TAPER, OVER 40 FT WITH OPEN SPACE BELOW EL DORADO COUNTY (EAST OF THE SIERRA NEVADA MOUNTAINS); LASSEN COUNTY (EAST OF HIGHWAY 395, BEGINNING AT STACEY AND INCLUDING HONEY LAKE); NEVADA COUNTY (EAST OF THE SIERRA NEVADA MOUNTAINS); PLACER COUNTY (EAST OF THE SIERRA NEVADA MOUNTAINS); AND SIERRA COUNTY (EAST OF THE SIERRA NEVADA MOUNTAINS).....	$ 44.29	16.12
DRYWALL: (1) TAPER (EL DORADO COUNTY (EAST OF THE SIERRA NEVADA MOUNTAINS); LASSEN COUNTY (EAST OF HIGHWAY 395, BEGINNING AT STACEY AND INCLUDING HONEY LAKE); NEVADA COUNTY (EAST OF THE SIERRA NEVADA MOUNTAINS); PLACER COUNTY (EAST OF THE SIERRA NEVADA MOUNTAINS); AND SIERRA COUNTY (EAST OF THE SIERRA NEVADA MOUNTAINS).....	$ 42.79	16.12

PAIN0767-004 01/01/2024

	Rates	Fringes
GLAZIER ALPINE, AMADOR, BUTTE, COLUSA, EL DORADO, GLENN, LASSEN, MODOC, NEVADA, PLACER, PLUMAS, SACRAMENTO, SHASTA, SIERRA, SISKIYOU, SOLANO (REMAINDER), SUTTER, TEHAMA, TRINITY, YOLO, YUBA	$ 43.25	35.62

PAIN1176-001 07/01/2022

	Rates	Fringes
PARKING LOT STRIPING/HIGHWAY MARKING: HIGHWAY IMPROVEMENT: GROUP 3 PROTECTIVE COATING, PAVEMENT SEALING	$ 35.11	17.62
PARKING LOT STRIPING/HIGHWAY MARKING: HIGHWAY IMPROVEMENT: GROUP 1 STRIPER: LAYOUT AND APPLICATION OF PAINTED TRAFFIC STRIPES AND MARKING; HOT THERMO PLASTIC; TAPE, TRAFFIC STRIPES AND MARKINGS	$ 40.83	17.62
PARKING LOT STRIPING/HIGHWAY MARKING: HIGHWAY IMPROVEMEMT: GROUP 2 GAMECOURT & PLAYGROUND INSTALLER	$ 34.71	17.62

PAIN1237-001 01/01/2024

	Rates	Fringes
SOFT FLOOR LAYER ALPINE; COLUSA; EL DORADO (WEST OF THE SIERRA NEVADA MOUNTAINS); GLENN; LASSEN (WEST OF HIGHWAY 395, BEGINNING AT STACEY AND INCLUDING HONEY LAKE); MODOC; NEVADA (WEST OF THE SIERRA NEVADA MOUNTAINS); PLACER (WEST OF THE SIERRA NEVADA MOUNTAINS); PLUMAS; SACRAMENTO; SHASTA; SIERRA (WEST OF THE SIERRA NEVADA MOUNTAINS); SISKIYOU; SUTTER; TEHAMA; TRINITY; YOLO AND YUBA COUNTIES	$ 48.54	26.59

PLAS0300-003 07/01/2018

	Rates	Fringes
PLASTERER AREA 355: NAPA & SONOMA COUNTIES	$ 32.70	31.68
PLASTERER AREA 355: MARIN	$ 36.73	31.68
PLASTERER AREA 295: ALPINE, AMADOR, BUTTE, COLUSA, EL DORADO, GLENN, LASSEN, MODOC, NEVADA, PLACER, PLUMAS, SACRAMENTO, SHASTA, SIERRA, SISKIYOU, SOLANO, SUTTER, TEHEMA, TRINITY, YOLO & YUBA COUNTIES	$ 32.70	31.68

PLAS0300-005 07/01/2016

	Rates	Fringes
CEMENT MASON/CONCRETE FINISHER	$ 32.15	23.27

PLUM0038-002 07/01/2025

	Rates	Fringes
PLUMBER, PLUMBER, STEAMFITTER, REFRIGERATION FITTER (MARIN AND SONOMA COUNTIES)	$ 91.00	49.40

PLUM0038-006 07/01/2025

	Rates	Fringes
LANDSCAPE/IRRIGATION FITTER: UNDERGROUND/UTILITY FITTER MARIN & SONOMA COUNTIES	$ 77.35	36.53

PLUM0228-001 01/01/2026

	Rates	Fringes
PLUMBER BUTTE, COLUSA, GLENN, LASSEN, MODOC, PLUMAS, SHASTA, SIERRA, SISKIYOU, SUTTER, TEHAMA, TRINITY & YUBA COUNTIES	$ 52.75	41.39

PLUM0343-001 07/01/2025

	Rates	Fringes
PLUMBER/PIPEFITTER: ALL OTHER WORK NAPA AND SOLANO COUNTIES FOOTNOTES: WHILE FITTING GALVANIZED MATERIAL: $.75 PER HOUR ADDITIONAL. WORK FROM TRUSSES, TEMPORARY STAGING, UNGUARDED STRUCTURES 35' FROM THE GROUND OR WATER: $.75 PER HOUR ADDITIONAL. WORK FROM SWINGING SCAFFOLDS, BOATSWAINS CHAIRS OR SIMILAR DEVICES: $.75 PER HOUR ADDITIONAL	$ 71.60	38.38

PLUM0350-001 08/01/2023

	Rates	Fringes
PLUMBER/PIPEFITTER EL DORADO COUNTY (LAKE TAHOE AREA ONLY); NEVADA COUNTY (LAKE TAHOE AREA ONLY); AND PLACER COUNTY (LAKE TAHOE AREA ONLY)	$ 52.14	18.71

PLUM0355-001 07/01/2025

	Rates	Fringes
UNDERGROUND UTILITY WORKER: /LANDSCAPE FITTER ALPINE, AMADOR, BUTTE, COLUSA, EL DORADO, GLENN, LASSEN, MODOC, NAPA, NEVADA, PLACER, PLUMAS, SACRAMENTO, SHASTA, SIERRA, SISKIYOU, SOLANO, SUTTER, TEHAMA, TRINITY, YOLO, AND YUBA COUNTIES	$ 36.01	18.50

PLUM0442-003 01/01/2026

	Rates	Fringes
PLUMBER AMADOR (SOUTH OF SAN JOAQUIN RIVER) AND ALPINE COUNTIES	$ 58.45	38.74

PLUM0447-001 07/01/2025

	Rates	Fringes
PLUMBER/PIPEFITTER: LIGHT COMMERCIAL WORK AMADOR (NORTH OF SAN JOAQUIN RIVER), EL DORADO (EXCLUDING LAKE TAHOE AREA), NEVADA (EXCLUDING LAKE TAHOE AREA); PLACER (EXCLUDING LAKE TAHOE AREA), SACRAMENTO AND YOLO COUNTIES	$ 55.58	24.02
PLUMBER/PIPEFITTER: JOURNEYMAN AMADOR (NORTH OF SAN JOAQUIN RIVER), EL DORADO (EXCLUDING LAKE TAHOE AREA), NEVADA (EXCLUDING LAKE TAHOE AREA); PLACER (EXCLUDING LAKE TAHOE AREA), SACRAMENTO AND YOLO COUNTIES	$ 67.37	30.00

ROOF0081-006 08/01/2024

	Rates	Fringes
ROOFER MARIN, NAPA, SOLANO AND SONOMA COUNTIES	$ 54.94	23.34

ROOF0081-007 08/01/2023

	Rates	Fringes
ROOFER ALPINE, BUTTE, COLUSA, EL DORADO, GLENN,LASSEN, MODOC, NEVADA, PLACER, PLUMAS, SACRAMENTO, SHASTA, SIERRA, SISKIYOU, SUTTER,		

TEHAMA, TRINITY, YOLO, AND YUBA COUNTIES.....$ 46.73 21.36

SFCA0483-003 01/01/2026

	Rates	Fringes
SPRINKLER FITTER (FIRE SPRINKLERS) MARIN, NAPA, SOLANO AND SONOMA COUNTIES	$ 81.54	41.35

SFCA0669-003 01/01/2026

	Rates	Fringes
SPRINKLER FITTER (ALPINE, BUTTE, COLUSA, EL DORADO, GLENN, LASSEN, MODOC, NEVADA, PLACER, PLUMAS, SACRAMENTO, SHASTA, SIERRA, SISKIYOU, SUTTER, TEHAMA, TRINITY, YOLO AND YUBA COUNTIES)	$ 52.06	29.86

SHEE0104-006 06/29/2020

	Rates	Fringes
SHEET METAL WORKER: MECHANICAL CONTRACTS $200,000 OR LESS MARIN, NAPA, SOLANO SONOMA & TRINITY COUNTIES	$ 55.92	45.29
SHEET METAL WORKER: ALL OTHER WORK MARIN, NAPA, SOLANO SONOMA & TRINITY COUNTIES	$ 64.06	46.83

SHEE0104-009 07/01/2021

	Rates	Fringes
SHEET METAL WORKER AMADOR, COLUSA, EL DORADO, NEVADA, PLACER, SACRAMENTO, SUTTER, YOLO AND YUBA COUNTIES	$ 47.85	41.90

SHEE0104-010 07/01/2020

	Rates	Fringes
SHEET METAL WORKER ALPINE COUNTY	$ 43.50	37.42

SHEE0104-011 07/01/2020

	Rates	Fringes
SHEET METAL WORKER: METAL DECKING AND SIDING ONLY BUTTE, COLUSA, EL DORADO, GLENN, LASSEN, MODOC, NEVADA, PLACER, PLUMAS, SACRAMENTO, SHASTA, SIERRA, SISKIYOU, SUTTER, TEHAMA, YOLO AND YUBA COUNTIES	$ 44.45	35.55

SHEE0104-014 07/01/2020

	Rates	Fringes
SHEET METAL WORKER: METAL DECKING AND SIDING ONLY (MARIN, NAPA, SOLANO, SONOMA AND TRINITY COUNTIES)	$ 44.45	35.55

SHEE0104-019 07/01/2020

	Rates	Fringes
SHEET METAL WORKER: MECHANICAL JOBS OVER $200,000 BUTTE, GLENN, LASSEN, MODOC, PLUMAS, SHASTA, SIERRA, SISKIYOU AND TEHAMA COUNTIES	$ 46.60	40.21
SHEET METAL WORKER: MECHANICAL JOBS $200,000 & UNDER BUTTE, GLENN, LASSEN, MODOC, PLUMAS, SHASTA, SIERRA, SISKIYOU AND TEHAMA COUNTIES	$ 35.16	35.88

TEAM0094-001 07/01/2025

	Rates	Fringes
TRUCK DRIVERS: GROUP 5: DUMP TRUCKS, 65 YDS. AND		

OVER; HOLLAND HAULER; LOW BED HEAVY DUTY TRANSPORT OVER 7 AXLES FOOTNOTES: ARTICULATED DUMP TRUCK; BULK CEMENT SPREADER (WITH OR WITHOUT AUGER); DUMPCRETE TRUCK; SKID TRUCK (DEBRIS BOX); DRY PRE-BATCH CONCRETE MIX TRUCKS; DUMPSTER OR SIMILAR TYPE; SLURRY TRUCK: USE DUMP TRUCK YARDAGE RATE. HEATER PLANER; ASPHALT BURNER; SCARIFIER BURNER; INDUSTRIAL LIFT TRUCK (MECHANICAL TAILGATE); UTILITY AND CLEAN-UP TRUCK: USE APPROPRIATE RATE FOR THE POWER UNIT OR THE EQUIPMENT UTILIZED. TRUCK DRIVER CLASSIFICATIONS.....$ 44.56 34.28

TRUCK DRIVERS: GROUP 4: DUMP TRUCKS, OVER 25 YDS. AND UNDER 65 YDS.; WATER PULLS - DW 10'S, 20'S, 21'S AND OTHER SIMILAR EQUIPMENT WHEN PULLING AQUA/PAK OR WATER TANK TRAILERS; HELICOPTER PILOTS (WHEN TRANSPORTING MEN AND MATERIALS); LOWBEDK HEAVY DUTY TRANSPORT UP TO INCLUDING 7 AXLES; DW10'S, 20'S, 21'S AND OTHER SIMILAR CAT TYPE, TERRA COBRA, LETOURNEAU PULLS, TOURNOROCKER, EUCLID AND SIMILAR TYPE EQUIPMENT WHEN PULLING FUEL AND/OR GREASE TANK TRAILERS OR OTHER MISCELLANEOUS TRAILERS; VACUUM TRUCKS 7500 GALS AND OVER AND TRUCK REPAIRMAN FOOTNOTES: ARTICULATED DUMP TRUCK; BULK CEMENT SPREADER (WITH OR WITHOUT AUGER); DUMPCRETE TRUCK; SKID TRUCK (DEBRIS BOX); DRY PRE-BATCH CONCRETE MIX TRUCKS; DUMPSTER OR SIMILAR TYPE; SLURRY TRUCK: USE DUMP TRUCK YARDAGE RATE. HEATER PLANER; ASPHALT BURNER; SCARIFIER BURNER; INDUSTRIAL LIFT TRUCK (MECHANICAL TAILGATE); UTILITY AND CLEAN-UP TRUCK: USE APPROPRIATE RATE FOR THE POWER UNIT OR THE EQUIPMENT UTILIZED. TRUCK DRIVER CLASSIFICATIONS.....$ 44.21 34.28

TRUCK DRIVERS: GROUP 3: DUMP TRUCKS, 8 YDS. AND INCLUDING 24 YDS.; TRANSIT MIXERS, OVER 10 YDS.; WATER TRUCKS, 7,000 GALS. AND OVER; JETTING TRUCKS, 7,000 GALS. AND OVER; VACUUM TRUCKS UNDER 7500 GALS. TRUCKS TOWING TILT BED OR FLAT BED PULL TRAILERS; LOWBED HEAVY DUTY TRANSPORT; HEAVY DUTY TRANSPORT TILLER PERSON; SELF- PROPELLED STREET SWEEPER WITH SELF-CONTAINED REFUSE BIN; BOOM TRUCK - HYDRO-LIFT OR SWEDISH TYPE EXTENSION OR RETRACTING CRANE; P.B. OR SIMILAR TYPE SELF-LOADING TRUCK; TIRE REPAIRPERSON; COMBINATION BOOTPERSON AND ROAD OILER; DRY DISTRIBUTION TRUCK (A BOOTPERSON WHEN EMPLOYED ON SUCH EQUIPMENT, SHALL RECEIVE THE RATE SPECIFIED FOR THE CLASSIFICATION OF ROAD OIL TRUCKS OR BOOTPERSON); AMMONIA NITRATE DISTRIBUTOR, DRIVER AND MIXER; SNOW GO AND/OR PLOW FOOTNOTES: ARTICULATED DUMP TRUCK; BULK CEMENT SPREADER (WITH OR WITHOUT AUGER); DUMPCRETE TRUCK; SKID TRUCK (DEBRIS BOX); DRY PRE-BATCH CONCRETE MIX TRUCKS; DUMPSTER OR SIMILAR TYPE; SLURRY TRUCK: USE DUMP TRUCK YARDAGE RATE. HEATER PLANER; ASPHALT BURNER; SCARIFIER BURNER; INDUSTRIAL LIFT TRUCK (MECHANICAL TAILGATE); UTILITY AND CLEAN-UP TRUCK: USE APPROPRIATE RATE FOR THE POWER UNIT OR THE EQUIPMENT UTILIZED. TRUCK DRIVER CLASSIFICATIONS.....$ 43.86 34.28

TRUCK DRIVERS: GROUP 2: DUMP TRUCKS, 6 YDS. AND UNDER 8 YDS.; TRANSIT MIXERS, THROUGH 10 YDS.; WATER TRUCKS, UNDER 7,000 GALS.; JETTING TRUCKS, UNDER 7,000 GALS.; SINGLE-UNIT FLAT RACK (3-AXLE UNIT); HIGHBED HEAVY DUTY TRANSPORT; SCISSOR TRUCK;

RUBBER-TIRED MUCK CAR (NOT SELF-LOADED);
RUBBER-TIRED TRUCK JUMBO; WINCH TRUCK AND ""A"" FRAME
DRIVERS; COMBINATION WINCH TRUCK WITH HOIST; ROAD
OIL TRUCK OR BOOTPERSON; BUGGYMOBILE; ROSS, HYSTER
AND SIMILAR STRADDLE CARRIERS; SMALL RUBBER-TIRED
TRACTOR FOOTNOTES: ARTICULATED DUMP TRUCK;
BULK CEMENT SPREADER (WITH OR WITHOUT AUGER);
DUMPCRETE TRUCK; SKID TRUCK (DEBRIS BOX); DRY
PRE-BATCH CONCRETE MIX TRUCKS; DUMPSTER OR SIMILAR
TYPE; SLURRY TRUCK: USE DUMP TRUCK YARDAGE RATE.
  HEATER PLANER; ASPHALT BURNER; SCARIFIER BURNER;
INDUSTRIAL LIFT TRUCK (MECHANICAL TAILGATE);
UTILITY AND CLEAN-UP TRUCK: USE APPROPRIATE RATE
FOR THE POWER UNIT OR THE EQUIPMENT UTILIZED.
             TRUCK DRIVER CLASSIFICATIONS.....$ 43.56 34.28
TRUCK DRIVERS: GROUP 1: DUMP TRUCKS, UNDER 6 YDS.;
SINGLE UNIT FLAT RACK (2- AXLE UNIT); NIPPER TRUCK
(WHEN FLAT RACK TRUCK IS USED APPROPRIATE FLAT RACK
SHALL APPLY); CONCRETE PUMP TRUCK (WHEN FLAT RACK
TRUCK IS USED APPROPRIATE FLAT RACK SHALL APPLY);
CONCRETE PUMP MACHINE; FORK LIFT AND LIFT JITNEYS;
FUEL AND/OR GREASE TRUCK DRIVER OR FUEL PERSON;
SNOW BUGGY; STEAM CLEANING; BUS OR PERSONHAUL
DRIVER; ESCORT OR PILOT CAR DRIVER; PICKUP TRUCK;
TEAMSTER OILER/GREASER AND/OR SERVICEPERSON; HOOK
TENDER (INCLUDING LOADING AND UNLOADING); TEAM
DRIVER; TOOL ROOM ATTENDANT (REFINERIES)
FOOTNOTES: ARTICULATED DUMP TRUCK; BULK CEMENT
SPREADER (WITH OR WITHOUT AUGER); DUMPCRETE TRUCK;
SKID TRUCK (DEBRIS BOX); DRY PRE-BATCH CONCRETE MIX
TRUCKS; DUMPSTER OR SIMILAR TYPE; SLURRY TRUCK: USE
DUMP TRUCK YARDAGE RATE.   HEATER PLANER;
ASPHALT BURNER; SCARIFIER BURNER; INDUSTRIAL LIFT
TRUCK (MECHANICAL TAILGATE); UTILITY AND CLEAN-UP
TRUCK: USE APPROPRIATE RATE FOR THE POWER UNIT OR
THE EQUIPMENT UTILIZED.   TRUCK
DRIVER CLASSIFICATIONS.....$ 43.26 34.28

WELDERS - Receive rate prescribed for craft performing
operation to which welding is incidental.
==========
Note: Executive Order (EO) 13706, Establishing Paid Sick Leave
for Federal Contractors applies to all contracts subject to the
Davis-Bacon Act for which the contract is awarded (and any
solicitation was issued) on or after January 1, 2017. If this
contract is covered by the EO, the contractor must provide
employees with 1 hour of paid sick leave for every 30 hours
they work, up to 56 hours of paid sick leave each year.
Employees must be permitted to use paid sick leave for their
own illness, injury or other health-related needs, including
preventive care; to assist a family member (or person who is
like family to the employee) who is ill, injured, or has other
health-related needs, including preventive care; or for reasons
resulting from, or to assist a family member (or person who is
like family to the employee) who is a victim of, domestic
violence, sexual assault, or stalking. Additional information
on contractor requirements and worker protections under the EO
is available at
https://www.dol.gov/agencies/whd/government-contracts.

Note: Executive Order 13658 generally applies to contracts subject
to the Davis-Bacon Act that were awarded on or between January 1,

2015 and January 29, 2022, and that have not been renewed or extended on or after January 30, 2022. Executive Order 13658 does not apply to contracts subject only to the Davis-Bacon Related Acts regardless of when they were awarded. If a contract is subject to Executive Order 13658, the contractor must pay all covered workers at least $13.65 per hour (or the applicable wage rate listed on this wage determination, if it is higher) for all hours spent performing on the contract from May 11, 2026, through December 31, 2026. The applicable Executive Order minimum wage rate will be adjusted annually. Additional information on contractor requirements and worker protections under Executive Order 13658 is available at www.dol.gov/whd/govcontracts.

Unlisted classifications needed for work not included within the scope of the classifications listed may be added after award only as provided in the labor standards contract clauses (29CFR 5.5 (a) (1) (iii)).

The body of each wage determination lists the classifications and wage rates that have been found to be prevailing for the type(s) of construction and geographic area covered by the wage determination. The classifications are listed in alphabetical order under rate identifiers indicating whether the particular rate is a union rate (current union negotiated rate), a survey rate, a weighted union average rate, a state adopted rate, or a supplemental classification rate.

Union Rate Identifiers

A four-letter identifier beginning with characters other than "SU", "UAVG", "SA", or "SC" denotes that a union rate was prevailing for that classification in the survey. Example: PLUM0198-005 07/01/2024. PLUM is an identifier of the union whose collectively bargained rate prevailed in the survey for this classification, which in this example would be Plumbers. 0198 indicates the local union number or district council number where applicable, i.e., Plumbers Local 0198. The next number, 005 in the example, is an internal number used in processing the wage determination. The date, 07/01/2024 in the example, is the effective date of the most current negotiated rate.

Union prevailing wage rates are updated to reflect all changes over time that are reported to WHD in the rates in the collective bargaining agreement (CBA) governing the classification.

Union Average Rate Identifiers

The UAVG identifier indicates that no single rate prevailed for those classifications, but that 100% of the data reported for the classifications reflected union rates. EXAMPLE: UAVG-OH-0010 01/01/2024. UAVG indicates that the rate is a weighted union average rate. OH indicates the State of Ohio. The next number, 0010 in the example, is an internal number used in producing the wage determination. The date, 01/01/2024 in the example, indicates the date the wage determination was updated to reflect the most current union average rate.

A UAVG rate will be updated once a year, usually in January, to reflect a weighted average of the current rates in the collective bargaining agreements on which the rate is based.

Survey Rate Identifiers

The ◆SU◆ identifier indicates that either a single non-union rate prevailed (as defined in 29 CFR 1.2) for this classification in the survey or that the rate was derived by computing a weighted average rate based on all the rates reported in the survey for that classification. As a weighted average rate includes all rates reported in the survey, it may include both union and non-union rates. Example: SUFL2022-007 6/27/2024. SU indicates the rate is a single non-union prevailing rate or a weighted average of survey data for that classification. FL indicates the State of Florida. 2022 is the year of the survey on which these classifications and rates are based. The next number, 007 in the example, is an internal number used in producing the wage determination. The date, 6/27/2024 in the example, indicates the survey completion date for the classifications and rates under that identifier.

◆SU◆ wage rates typically remain in effect until a new survey is conducted. However, the Wage and Hour Division (WHD) has the discretion to update such rates under 29 CFR 1.6(c)(1).

State Adopted Rate Identifiers

The ◆SA◆ identifier indicates that the classifications and prevailing wage rates set by a state (or local) government were adopted under 29 C.F.R 1.3(g)-(h). Example: SAME2023-007 01/03/2024. SA reflects that the rates are state adopted. ME refers to the State of Maine. 2023 is the year during which the state completed the survey on which the listed classifications and rates are based. The next number, 007 in the example, is an internal number used in producing the wage determination.
The date, 01/03/2024 in the example, reflects the date on which the classifications and rates under the ◆SA◆ identifier took effect under state law in the state from which the rates were adopted.

WAGE DETERMINATION APPEALS PROCESS

1) Has there been an initial decision in the matter? This can be:

a) a survey underlying a wage determination
b) an existing published wage determination
c) an initial WHD letter setting forth a position on a wage determination matter
d) an initial conformance (additional classification and rate) determination

On survey related matters, initial contact, including requests for summaries of surveys, should be directed to the WHD Branch of Wage Surveys. Requests can be submitted via email to davisbaconinfo@dol.gov or by mail to:

Branch of Wage Surveys
Wage and Hour Division
U.S. Department of Labor
200 Constitution Avenue, N.W.
Washington, DC 20210

Regarding any other wage determination matter such as conformance decisions, requests for initial decisions should be directed to the WHD Branch of Construction Wage Determinations. Requests can be submitted via email to BCWD-Office@dol.gov or by mail to:

Branch of Construction Wage Determinations
Wage and Hour Division
U.S. Department of Labor
200 Constitution Avenue, N.W.
Washington, DC 20210

2) If an initial decision has been issued, then any interested party (those affected by the action) that disagrees with the

decision can request review and reconsideration from the Wage and Hour Administrator (See 29 CFR Part 1.8 and 29 CFR Part 7). Requests for review and reconsideration can be submitted via email to dba.reconsideration@dol.gov or by mail to:

Wage and Hour Administrator
U.S. Department of Labor
200 Constitution Avenue, N.W.
Washington, DC 20210

The request should be accompanied by a full statement of the interested party's position and any information (wage payment data, project description, area practice material, etc.) that the requestor considers relevant to the issue.

3) If the decision of the Administrator is not favorable, an interested party may appeal directly to the Administrative Review Board (formerly the Wage Appeals Board). Write to:

Administrative Review Board
U.S. Department of Labor
200 Constitution Avenue, N.W.
Washington, DC 20210.

==========

END OF GENERAL DECISION "

Attachment J-2
DI-137
(March 2017)

UNITED STATES
DEPARTMENT OF THE INTERIOR

RELEASE OF CLAIMS

Contract Number

Date

WHERE AS, by terms of the above contract for

, entered into by the United States of America, hereinafter also referred to as the United States, and the contractor

, it is provided that after completion of all work, and prior to final payment, the contractor will furnish the United States with a release of all claims;

NOW, THEREFORE, in consideration of the above premises and the payment by the United States to the contractor of the amount now due under the contract, to wit, the sum of dollars ($) , the contractor hereby remises, releases, and forever discharges the United States, its officers, agents, and employees, of and from all manner of debts, dues, liabilities, obligations, accounts, claims, and demands whatsoever, in law and in equity, under or by virtue of the said contract except:

IN WITNESS WHEREOF, the contractor has executed this release this day of , 20 .

(Contractor)

By
(Signature)

☐ Corporation ☐ Joint Venture
☐ Partnership ☐ Individual

(Name)

(Street Number or R.F.D.)

(Title)

(City) (State) (Zip Code)

COMPLETE ONLY IF CONTRACTOR IS A CORPORATION

I, CERTIFY That I am the
of the corporation named as contractor herein; that , who
signed this release on behalf of the corporation, was then of said corporation; and that
said release was duly signed for and on behalf of said corporation by authority of its governing body.

[SEAL]

(Signature)

This form was electronically produced by Elite Federal Forms, Inc.

SECTION J- Attachment 3

OFFEROR RESPONSIBILITY INFORMATION

It is the general policy of the Department of Interior that contracts shall be awarded only to contractors determined to be responsible in accordance with Part 9 of the Federal Acquisition Regulations (FAR).

No contract shall be awarded to any person or firm unless the Contracting Officer shall have in his/her possession or obtain information sufficient to satisfy himself/herself that a prospective contractor currently meets the minimum FAR Part 9 standards.

The offeror must complete schedule, (attached) to provide the offeror's existing commitments and equipment and personnel. This is part of the information the Government will use in making its responsibility determination.

These documents shall be treated by the Government as confidential.

EXISTING COMMITMENTS

Provide the information on all on-going contracts, both for the offeror and any major subcontractors. Indicate in the Contract Holder column if the contract is held by the offeror or the name of the subcontractor.

Contract Holder	CONTRACT NO. & AMT	DESCRIPTION/LOCATION	FOR WHOM PERFORMED	Performance Period	Percent Subcontracted

Add additional rows if necessary

EQUIPMENT AND PERSONNEL

Provide a statement below as to the availability of plant/personnel/equipment needed in order to perform the work in accordance with the statement of work.

Labor Category	Number of Employees Needed to Perform	Number of Employees Available to Perform

Insert additional rows if necessary. If "Number of Employees Available to Perform" is less than "Number of Employees Needed to Perform," explain below how the shortage will be made up.

Identification of Equipment Needed	Amount of Equipment Needed to Perform	Amount of Equipment Available to Perform

Insert additional rows if necessary. If "Amount of Equipment Available to Perform" is less than "Amount of Equipment Needed to Perform," explain below how the shortage will be made up.

This page intentionally left blank

SECTION K - REPRESENTATIONS, CERTIFICATIONS AND OTHER STATEMENTS OF OFFERORS

FAR 52.252-01 SOLICITATION PROVISIONS INCORPORATED BY REFERENCE FEB 1998

This solicitation incorporates one or more solicitation provisions by reference, with the same force and effect as if they were given in full text. Upon request, the Contracting Officer will make their full text available. The offeror is cautioned that the listed provisions may include blocks that must be completed by the offeror and submitted with its quotation or offer. In lieu of submitting the full text of those provisions, the offeror may identify the provision by paragraph identifier and provide the appropriate information with its quotation or offer. Also, the full text of a solicitation provision may be accessed electronically at this/these address(es): https://www.acquisition.gov/browse/index/far (FAR 52.XXX-XX formatted clauses)

FAR Clause	Title	Date
52.203-18	Prohibition on Contracting with Entities that Require Certain Internal Confidentiality Agreements or Statements-Representation	JAN 2017
52.209-2	Prohibition on Contracting with Inverted Domestic Corporations-Domestic - (RFO DEVIATION)	MAY 2026
52.225-25	Prohibition on Contracting With Entities Engaging in Certain Activities or Transactions Relating to Iran—Representation and Certifications	JUN 2020

FAR 52.209-11 Representation by Corporations Regarding Delinquent Tax Liability or a Felony Conviction under any Federal Law – (RFO DEVIATION) MAY 2026

(a) The Government will not enter into a contract with any corporation that—

(1) Has any unpaid Federal tax liability that has been assessed, for which all judicial and administrative remedies have been exhausted or have lapsed, and that is not being paid in a timely manner pursuant to an agreement with the authority responsible for collecting the tax liability, where the awarding agency is aware of the unpaid tax liability, unless an agency has considered suspension or debarment of the corporation and made a determination that suspension or debarment is not necessary to protect the interests of the Government; or

(2) Was convicted of a felony criminal violation under any Federal law within the preceding 24 months, where the awarding agency is aware of the conviction, unless an agency has considered suspension or debarment of the corporation and made a determination that this action is not necessary to protect the interests of the Government.

(b) The Offeror represents that–

(1) It is □ is not □ a corporation that has any unpaid Federal tax liability that has been assessed, for which all judicial and administrative remedies have been exhausted or have lapsed, and that is not being paid in a timely manner pursuant to an agreement with the authority responsible for collecting the tax liability; and

(2) It is □ is not □ a corporation that was convicted of a felony criminal violation under a Federal law within the preceding 24 months.

(End of provision)

FAR 52.219-1 Small Business Program Representations - (RFO DEVIATION) JAN 2026

(a) *Definitions*. As used in this provision-

Economically disadvantaged women-owned small business (EDWOSB) concern means a small business concern that is at least 51 percent directly and unconditionally owned by, and the management and daily business operations of which are controlled by, one or more women who are citizens of the United States and who are economically disadvantaged in accordance with 13 CFR part 127, and the concern is certified by SBA or an approved third-party certifier in accordance with 13 CFR 127.300. It automatically qualifies as a women-owned small business concern eligible under the WOSB Program.

HUBZone small business concern means a small business concern that meets the requirements described in 13 CFR 126.200, is certified by the Small Business Administration (SBA) and designated by SBA as a HUBZone small business concern in the Small Business Search (SBS) (13 CFR 126.103).

Service-disabled veteran-owned small business (SDVOSB) concern eligible under the SDVOSB Program means an SDVOSB concern that is designated in the System for Award Management (SAM) as certified by the Small Business Administration (SBA) in accordance with 13 CFR 128.300.

Small business concern—

(1) Means a concern, including its affiliates, that is independently owned and operated, not dominant in its field of operation, and qualified as a small business under the criteria in 13 CFR part 121 and the size standard in paragraph (b) of this provision.

(2) *Affiliates*, as used in this definition, means business concerns, one of whom directly or indirectly controls or has the power to control the others, or a third party or parties control or have the power to control the others. In determining whether affiliation exists, consideration is given to all appropriate factors including common ownership, common management, and contractual relationships. SBA determines affiliation based on the factors set forth at 13 CFR 121.103.

Small disadvantaged business concern means a small business concern that-

(1) Is at least 51 percent unconditionally and directly owned (as defined at 13 CFR 124.105) by one or more socially disadvantaged (as defined at 13 CFR 124.103) and economically disadvantaged (as defined at 13 CFR 124.104) individuals who are citizens of the United States, and

(2) The management and daily business operations of which are controlled (as defined at 13 CFR 124.106) by individuals who meet the criteria in paragraph (1) of this definition.

Women-owned small business (WOSB) concern eligible under the WOSB Program (in accordance with 13 CFR part 127) means a small business concern that is at least 51 percent directly and unconditionally owned by, and the management and daily business operations of which are controlled by, one or more women who are citizens of the United States, and the concern is certified by SBA or an approved third-party certifier in accordance with 13 CFR 127.300.

(b)

(1) The North American Industry Classification System (NAICS) code for this acquisition is **238990**.
(2) The small business size standard is **$19M**.

(3) The small business size standard for a concern that submits an offer, other than on a construction or service acquisition, but proposes to furnish an end item that it did not itself manufacture, process, or produce (*i.e.*, nonmanufacturer), is 500 employees, or 150 employees for information technology value-added resellers under NAICS code 541519, if the acquisition—

(i) Is set aside for small business and has a value above the simplified acquisition threshold;

(ii) Uses the HUBZone price evaluation preference regardless of dollar value, unless the offeror waives the price evaluation preference; or

(iii) Is an 8(a), HUBZone, service-disabled veteran-owned, economically disadvantaged women-owned, or women-owned small business set-aside or sole-source award regardless of dollar value.

(c) *Representations.*

(1) The offeror represents as part of its offer that—

(i) it □ is, □ is not a small business concern; or

(ii) It □ is, □ is not a small business joint venture that complies with the requirements of 13 CFR 121.103(h) and 13 CFR 125.8(a) and (b). [*The offeror shall enter the name and unique entity identifier of each party to the joint venture:* __.]

(2) [*Complete only if the offeror represented itself as a small business concern in paragraph (c)(1) of this provision.]* The offeror represents that it □ is, □ is not a women-owned small disadvantage business concern.

(3) *Women-owned small business (WOSB) joint venture eligible under the WOSB Program.* The offeror represents as part of its offer that it □ is, □ is not a joint venture that complies with the requirements of 13 CFR 127.506(a) through (c). [*The offeror shall enter the name and unique entity identifier of each party to the joint venture:* __.]

(4) *Economically disadvantaged women-owned small business (EDWOSB) joint venture.* The offeror represents as part of its offer that it □ is, □ is not a joint venture that complies with the requirements of 13 CFR 127.506(a) through (c). [*The offeror shall enter the name and unique entity identifier of each party to the joint venture:* __.]

(5) *SDVOSB joint venture eligible under the SDVOSB Program*. [*Complete only if the offeror is certified as a SDVOSB concern*]. The offeror represents as part of its offer that it □ is, □ is not a SDVOSB joint venture eligible under the SDVOSB Program that complies with the requirements of 13 CFR 128.402. [*The offeror shall enter the name and unique entity identifier of each party to the joint venture:*__.]

(6) *HUBZone joint venture eligible under the HUBZone Program.* [*Complete only if the offeror is a HUBZone small business concern.*] The offeror represents, as part of its offer, that it □ is, □ is not a HUBZone joint venture that complies with the requirements of 13 CFR 126.616(a) through (c). [*The offeror shall enter the name and unique entity identifier of each party to the joint venture:* __.] Each HUBZone small business concern participating in the HUBZone joint venture must be certified as a HUBZone concern.

(d) *Notice.* Under 15 U.S.C. 645(d), any person who misrepresents a firm's status as a business concern that is small, HUBZone small, small disadvantaged, service-disabled veteran-owned small, economically disadvantaged women-owned small, or women-owned small eligible under the WOSB Program in order to obtain a contract to be awarded under the preference programs established pursuant to section 8, 9, 15, 31, and 36 of the Small Business Act or any other provision of Federal law that specifically references section 8(d) for a definition of program eligibility, will be—

(1) Punished by imposition of fine, imprisonment, or both;

(2) Subject to administrative remedies, including suspension and debarment; and

(3) Ineligible for participation in programs conducted under the authority of the Act.

(End of provision)

SECTION L - INSTRUCTIONS, CONDITIONS AND NOTICES TO OFFERORS

FAR 52.252-1 SOLICITATION PROVISIONS INCORPORATED BY REFERENCE FEB 1998

This solicitation incorporates one or more solicitation provisions by reference, with the same force and effect as if they were given in full text. Upon request, the Contracting Officer will make their full text available. The offeror is cautioned that the listed provisions may include blocks that must be completed by the offeror and submitted with its quotation or offer. In lieu of submitting the full text of those provisions, the offeror may identify the provision by paragraph identifier and provide the appropriate information with its quotation or offer. Also, the full text of a solicitation provision may be accessed electronically at this/these address(es):

https://www.acquisition.gov/browse/index/far (FAR 52.XXX-XX formatted clauses)
https://www.acquisition.gov/diar (DIAR 1452.XXX-XX formatted caluses)

The clauses in the table below are hereby incorporated by reference:

Provision	Title	Date
FAR 52.204-7	System for Award Management (RFO DEVIATION)	MAR 2026
FAR 52.214-34	Submission of Offers in the English Language	APR 1991
FAR 52.214-35	Submission Of Offers In U.S. Currency	APR 1991
FAR 52.215-1	Instructions to Offerors—Competitive Acquisition	NOV 2021
DIAR 1452.215-71	Use and Disclosure of Proposal Information	APR 1984

FAR 52.216-1 TYPE OF CONTRACT APR 1984

The Government contemplates award of a firm-fixed price contract resulting from this solicitation.

(End of Provision)

FAR 52.215-1 Instructions to Offerors - Competitive Acquisition - Addendum

Inquiries. All inquiries pertaining to this solicitation (except where noted for the onsite site visit) shall be submitted *via email* to the Contracting Officer, Rosana Yousef Goarji at rosana_yousefgoarji@ios.doi.gov no later than 12:00 PM Pacific Standard Time, **June 23, 2026**. Responses pertinent to all prospective offerors will be included in an amendment to the solicitation.

(End of Provision)

FAR 52.222-5 CONSTRUCTION WAGE RATE REQUIREMENTS - MAY 2026 SECONDARY SITE OF THE WORK – (RFO DEVIATION)

(a)
(1) The offeror must notify the Government if the offeror intends to perform work at any secondary site of the work, as defined in paragraph (a)(1)(ii) of the FAR clause at 52.222-6, Construction Wage Rate Requirements, of this solicitation.
(2) If the offeror is unsure if a planned work site satisfies the criteria for a secondary site of the work, the offeror must request a determination from the Contracting Officer.
(b)
(1) If the wage determination provided by the Government for work at the primary site of the work is not applicable to the secondary site of the work, the offeror must request a wage determination from the Contracting Officer.
(2) The due date for receipt of offers will not be extended as a result of an offeror's request for a wage determination for a secondary site of the work.

(End of provision)

FAR 52.252-5 AUTHORIZED DEVIATIONS IN PROVISION NOV 2020

(a) The use in this solicitation of any Federal Acquisition Regulation (48 CFR Chapter 1) provision with an authorized deviation is indicated by the addition of "(DEVIATION)" after the date of the provision.

(b) The use in this solicitation of any Department of the Interior or Bureau of Reclamation Agency provision with an authorized deviation is indicated by the addition of "(DEVIATION)" after the name of the regulation.

(End of Provision)

DIAR 1452.233-2 SERVICE OF PROTEST DEPARTMENT OF THE INTERIOR (DEVIATION) JUL 1996

(a) Protests, as defined in section 31.101 of the Federal Acquisition Regulation, that are filed directly with an agency, and copies of any protests that are filed with the Government Accountability Office (GAO), shall be served on the Contracting Officer (addressed as follows) by obtaining written and dated acknowledgment of receipt from

Rosana Yousef Goarji, Contracting Officer
U.S. Bureau of Reclamation
2800 Cottage Way, Room E-1815
Sacramento, California 95825-1898

(b) The copy of any protest shall be received in the office designated above within one day of filing a protest with the GAO.

(c) A copy of the protest served on the Contracting Officer shall be simultaneously furnished by the protester to the Department of the Interior Assistant Solicitor for Procurement and Patents, 1849 C Street, NW, Room 6511, Washington, D.C. 20240

(End of Provision)

Evaluation of Offers

(a) The Government will award a contract resulting from this solicitation to the responsible offeror whose offer conforming to the solicitation and lowest price. The following factors shall be used to evaluate offers:

Price Only

INSTRUCTIONS TO OFFERORS

The offeror shall submit a **quote** in accordance with the instructions contained below.

(a) The electronic quote package shall include:

(1) **A fully completed SF1442 (Offer Section, Page 3 of SF1442 and Price Schedule)**

(2) Fully executed and completed offeror representations, certifications electronically via SAM.gov. In addition, submit a fully executed Section K of this solicitation;

(3) Responsibility Information:

(a) Responsibility Information: A fully completed Attachment J-3.

(4) Please provide your Unique Entity ID (UEI) and Tax Identification Number (TIN) below:

DUNS: _____
TIN: _____

SECTION M – EVALUATIONS FOR AWARD

M.2 Evaluation Factors for Award

(a) The Government will award a contract resulting from this solicitation to the responsible offeror whose offer conforming to the solicitation and lowest price. The following factors shall be used to evaluate offers:

Price Only