MECHANICAL LEGEND

- 20x12 SA — DUCT SIZE & SYSTEM ABBREVIATION FIRST FIGURE IS DIMENSION SHOWN ON PLAN
- DUCT SECTION, POSITIVE PRESSURE
- DUCT SECTION, NEGATIVE PRESSURE
- NEW DUCTWORK
- FLEXIBLE DUCTWORK
- DUCT TRANSITION
- RECT. TO ROUND TRANSITION
- BRANCH DUCTWORK
- TURNING VANES
- CEILING DIFFUSER - SUPPLY
- CEILING DIFFUSER - RETURN
- CEILING DIFFUSER - EXHAUST
- CEILING DIFFUSER - ROUND
- LINEAR SLOT DIFFUSER (DOUBLE SLOT)
- LOUVER AND SCREEN
- FIRE DAMPER, PROVIDE ACCESS DOOR
- VOLUME DAMPER
- BD — BACKDRAFT DAMPER
- SUPPLY/INTAKE AIRFLOW DIRECTION
- EXHAUST AIRFLOW DIRECTION
- GRILLE OR REGISTER, SIDEWALL
- PIPE CAP
- PIPE CONNECTION, BOTTOM
- PIPE CONNECTION, TOP
- PIPE ELBOW, TURNED UP
- PIPE ELBOW, TURNED DOWN
- PIPE TEE
- ANCHOR, INTERMEDIATE
- BUTTERFLY VALVE
- GATE VALVE
- BALL VALVE
- CHECK VALVE
- STRAINER VALVE
- THREE-WAY CONTROL VALVE
- TWO-WAY CONTROL VALVE
- PRESSURE GAUGE
- U — DOOR UNDERCUT
- Ø — DIAMETER

- MANUAL AIR VENT
- AUTOMATIC AIR VENT
- PUMP (SCHEMATIC)
- T — THERMOSTAT
- CO2 — CARBON DIOXIDE SENSOR
- CO — CARBON MONOXIDE SENSOR
- M — MOTORIZED DAMPER
- A — PNEUMATIC DAMPER
- S — EMERGENCY SHUTDOWN SWITCH
- DP — DIFFERENTIAL PRESSURE SENSOR
- SD — DUCT SMOKE DETECTOR
- M — MASTER EMERGENCY SHUTDOWN SWITCH
- H — HUMIDISTAT
- HVAC - # — EQUIPMENT TAG
- BOD: 4' - 7" — BOTTOM OF DUCT ELEVATION TAG
- POINT OF DISCONNECTION
- POINT OF CONNECTION
- # — KEYED NOTE
- CD-A | W X H | ### — AIR TERMINAL AND AIRFLOW TAG
  - AIR QUANTITY DELIVERED BY DEVICE IN CFM
  - AIR TERMINAL NECK SIZE (IN.)
  - AIR TERMINAL MARK AS INDICATED IN SCHEDULE

OR

- SAD-# / ### CFM — AIR TERMINAL MARK AS INDICATED IN SCHEDULE
  - AIR QUANTITY DELIVERED BY DEVICE
- AREA OUT OF SCOPE
- AREA OF DEMOLITION

NOTES:

1. THIS LEGEND IS FOR REFERENCE ONLY.
2. ALL SYMBOLS WITHIN THIS LEGEND MAY NOT APPLY TO THIS PROJECT.

MECHANICAL ABBREVIATIONS

(D)	DEMOLITION
(E)	EXISTING
(R)	RELOCATED
AAV	AUTOMATIC AIR VENT
AFF	ABOVE FINISHED FLOOR
AFG	ABOVE FINISHED GRADE
AHU	AIR HANDLING UNIT
AP	ACCESS PANEL
APD	AIR PRESSURE DROP
BFF	BELOW FINISHED FLOOR
BHP	BRAKE HORSEPOWER
CAP	CAPACITY
CHWR	CHILLED WATER RETURN
CHWS	CHILLED WATER SUPPLY
CONC	CONCRETE
COND	CONDENSATE
CONN	CONNECTION
CONT	CONTINUATION
CP-1	CONTROL PANEL WITH DESIGNATION
CU	CONDENSING UNIT
DB	DRY BULB
DEG	DEGREES
DEMO	DEMOLITION
DIA	DIAMETER
DN	DOWN
DWG	DRAWING
EA	EXHAUST AIR
EAG	EXHAUST AIR GRILLE
EAT	ENTERING AIR TEMPERATURE
EF	EXHAUST FAN
ENT	ENTERING
ESP	EXTERNAL STATIC PRESSURE
ET	EXPANSION TANK
EUH	ELECTRIC UNIT HEATER
EXH	EXHAUST
F	FAHRENHEIT
FCU	FAN COIL UNIT
FD	FIRE DAMPER
FLEX	FLEXIBLE
FM	FLOW METER
FPM	FEET PER MINUTE
GAL	GALLONS
GM	GAS METER
GPM	GALLONS PER MINUTE
GUH	GAS UNIT HEATER
HP	HORSEPOWER
ID	INSIDE DIAMETER/DIMENSION
IE	INVERT ELEVATION
IN	INCH
LAT	LEAVING AIR TEMPERATURE
LVL	LEVEL
LWT	LEAVING WATER TEMPERATURE
M	METER
MAX	MAXIMUM
MFR	MANUFACTURER
MIN	MINIMUM
MISC	MISCELLANEOUS
N/A	NOT APPLICABLE
NG	NATURAL GAS
NTS	NOT TO SCALE
OA	OUTDOOR AIR
OD	OUTSIDE DIAMETER
OED	OPEN ENDED DUCT
PD	PRESSURE DROP
PSI	POUNDS PER SQUARE INCH
R	RADIUS
RA	RETURN AIR
RAG	RETURN AIR GRILLE
REFRIG	REFRIGERANT
RH	RADIANT HEATER
RL	REFRIGERANT LIQUID LINE
RPM	REVOLUTIONS PER MINUTE
SA	SUPPLY AIR
SAG	SUPPLY AIR GRILLE
SB	SECURITY BARS
SF	SUPPLY FAN
SPEC	SPECIFICATION
STD	STANDARD
T	THERMOMETER
TA	TRANSFER AIR
TBD	TO BE DETERMINED
TEMP	TEMPERATURE
TSP	TOTAL STATIC PRESSURE
TSTAT	THERMOSTAT
TYP	TYPICAL
UH	UNIT HEATER
VAV	VARIABLE AIR VOLUME
VIF	VERIFY IN FIELD
VRF	VARIABLE REFRIGERANT FLOW
W	WATT
WB	WET BULB
WMS	WIRE MESH SCREEN

DESIGN CONDITIONS FOR LOAD CALCULATIONS

SEASON	OUTDOOR DESIGN CONDITIONS	ELEV. (FT)	INDOOR CONDITIONS / ROOM TYPE
			SHOPS
WINTER (99% DB)	4.6°F	581	55°F

APPLICABLE CODES AND STANDARDS

UNITED FACILITIES CRITERIA	(UFC 4-214-02: 2018)
MECHANICAL CODE	(IMC 2018)
NATIONAL FIRE PROTECTION AGENCY (NFPA)	(NFPA 54: 2018)
PLUMBING CODE	(IPC 2018)

NOTE: ALL APPLICABLE BUILDING CODES AND STANDARDS ARE NOT SPECIFIED HEREIN.

MECHANICAL GENERAL NOTES

GENERAL NOTES

1. THESE GENERAL NOTES APPLY TO ALL SHEETS. REFER TO INDIVIDUAL SHEETS FOR SHEET SPECIFIC NOTES.
2. CONTRACT DOCUMENT DRAWINGS ARE DIAGRAMMATIC AND ARE INTENDED TO CONVEY SCOPE AND GENERAL ARRANGEMENT ONLY. DO NOT SCALE FOR MATERIAL QUANTITIES. ALL SCALING SHOULD BE REFERENCED TO ARCHITECTURAL PLANS ONLY.
3. ALL MECHANICAL WORK SHALL BE IN STRICT COMPLIANCE WITH THE LATEST APPLICABLE EDITION OF THE INTERNATIONAL MECHANICAL AND PLUMBING CODES, APPLICABLE PROVISIONS OF THE NATIONAL FUEL GAS CODE (NFPA 54), AND APPLICABLE UFCS (MILITARY WORK).
4. COORDINATE CONSTRUCTION OF ALL MECHANICAL WORK WITH ALL OTHER DISCIPLINES AND AS SHOWN ON OTHER CONTRACT DRAWINGS.
5. CONTRACTOR SHALL VISIT SITE AND VERIFY ALL EXISTING CONDITIONS AND CONNECTIONS TO EXISTING WORK PRIOR TO BIDDING AND CONSTRUCTION.
6. COORDINATE ALL CUTTING AND PATCHING WITH GENERAL CONTRACTOR AND OTHER DISCIPLINES. CONTRACTOR SHALL BE RESPONSIBLE FOR ALL CUTTING AND PATCHING RELATED TO THEIR WORK.
7. ALL ATTACHMENTS TO THE BUILDING STRUCTURE SHALL BE COORDINATED WITH THE STRUCTURAL DESIGN. ALL BRACING AND MOUNTING OF PIPES AND DUCTS SHALL MEET THE MINIMUM REQUIREMENTS OF THE MOST RECENT SMACNA HVAC DUCT CONSTRUCTION STANDARDS-METAL AND FLEXIBLE. CONTRACTOR SHALL MAINTAIN ONE COPY OF THIS MANUAL ON SITE AT ALL TIMES.
8. PROVIDE FLASHING AND COUNTERFLASHING FOR ALL PENETRATIONS THROUGH WALLS OR ROOF TO MAKE WATERPROOF INSTALLATION.
9. ALL MISCELLANEOUS STEEL REQUIRED TO ENSURE PROPER INSTALLATION AND AS SHOWN IN THE DETAILS FOR PIPING, DUCTWORK, AND EQUIPMENT (UNLESS OTHERWISE NOTED) SHALL BE FURNISHED AND INSTALLED BY THE MECHANICAL CONTRACTOR.
10. AT COMPLETION OF CONSTRUCTION, CONTRACTOR SHALL PROVIDE COPIES OF BOUND OPERATIONS AND MAINTENANCE MANUALS.
11. AT THE TIME OF ROUGH INSTALLATION AND DURING STORAGE ON THE CONSTRUCTION SITE UNTIL FINAL STARTUP OF THE HEATING, COOLING AND VENTILATING EQUIPMENT, ALL DUCT AND OTHER RELATED AIR DISTRIBUTION COMPONENT OPENINGS SHALL BE COVERED WITH TAPE, PLASTIC, SHEETMETAL OR OTHER METHODS ACCEPTABLE TO THE ENFORCING AGENCY TO REDUCE THE AMOUNT OF DUST, WATER AND DEBRIS WHICH MAY ENTER THE SYSTEM.

PIPING NOTES

1. ALL GAS PIPING SHALL BE LABELED AT BEGINNING, ALL ENDS, AND AT 6' INTERVALS DESIGNATING GAS & PRESSURE. LABELS SHALL BE PER SPECIFICATIONS.
2. PROVIDE/INSTALL THROUGH WALL PIPE PENETRATIONS AS REQUIRED WHERE PIPE ENTERS BUILDING. SLEEVE AND SEAL.
3. SUPPORT ALL PIPING SO THAT IT IS FIRMLY HELD IN PLACE BY APPROVED HANGERS AND SUPPORTS.

EQUIPMENT NOTES

1. INSTALL ALL MECHANICAL EQUIPMENT AND APPURTENANCES IN ACCORDANCE WITH MANUFACTURERS RECOMMENDATIONS, CONTRACT DOCUMENTS, AND APPLICABLE CODES AND REGULATIONS.
2. WHERE TWO OR MORE ITEMS OF THE SAME TYPE OF EQUIPMENT ARE REQUIRED, THE PRODUCT OF ONE MANUFACTURER SHALL BE USED.
3. IDENTIFY ALL NEW MECHANICAL EQUIPMENT WITH NAMEPLATES PERMANENTLY ENGRAVED PER SPECIFICATIONS.
4. EQUIPMENT AND APPLIANCES SHALL BE ACCESSIBLE FOR SERVICE, INSPECTION, REPAIR AND REPLACEMENT WITHOUT REMOVING PERMANENT CONSTRUCTION. SUFFICIENT CLEARANCE SHALL BE MAINTAINED TO PERMIT CLEANING, REPLACEMENT OF FILTERS, BLOWERS, MOTORS, CONTROLS AND LUBRICATION OF MOVING PARTS.

CONTROL NOTES

1. UNLESS OTHERWISE SHOWN, LOCATE ALL ROOM SENSORS AND THERMOSTATS SUCH THAT OPERABLE PARTS ARE NO HIGHER THAN 48" ABOVE FINISHED FLOOR.
2. ALL CONTROL CONDUIT AND WIRING SHALL COMPLY WITH THE ELECTRICAL CODE AND THE SPECIFICATIONS.

105th AIRLIFT WING

MARK	DESCRIPTION	DATE
4	ISSUE FOR CONSTRUCTION	29 MAY 2026
3	TYPE B-3 (100%) FINAL DESIGN	26 FEB 2026
2	TYPE B-2 (95%) PRE-FINAL DESIGN	18 JUL 2025
1	TYPE A-2 (35%) SUBMITTAL	10 APR 2024

NATIONAL GUARD BUREAU

TETRA TECH

DESIGNED BY: R.EARLIE
DRAWN BY: R.EARLIE
CHECKED BY: S.SOLLINS
SUBMITTED BY: S. FORD
SIZE: ANSI D

ISSUE DATE: 29 MAY 2026
SOLICITATION NO.:
CONTRACT NO.:

105TH AIRLIFT WING, AIR NATIONAL GUARD BASE, STEWART INTERNATIONAL AIRPORT, MAGUIRE WAY, NEWBURGH, NY 12550
ENERGY: REPAIR BUILDING 200
FY2026
WHAY142004
ABBREVIATIONS, LEGENDS, AND NOTES

SHEET ID
M-001

95% SUBMITTAL

GENERAL SHEET NOTES

1. ALL EXISTING MECHANICAL SYSTEMS SHALL REMAIN.
2. THE CONTRACTOR SHALL MAINTAIN ALL CLEARANCE REQUIREMENTS FOR IRHS DURING INSTALLATION

(#) KEYNOTES

1. RELOCATED VUH-4 AS REQUIRED TO ALLOW CLEARANCE FOR VENT AND INTAKE DUCTWORK FOR IRH-4.
2. MOUNT IRH AS A HIGH AS POSSIBLE WHILE MAINTAINING A MINIMUM OF 6" CLEARANCE ABOVE HEATER.
3. 4" COMBUSTION AIR INLET ROUTED UP TO ROOF. TERMINATE WITH MANUFACTURER'S PROVIDED ROOF INTAKE CAP.
4. 4" VENT ROUTED UP TO ROOF. TERMINATE WITH MANUFACTURER'S PROVIDED ROOF VENT CAP.

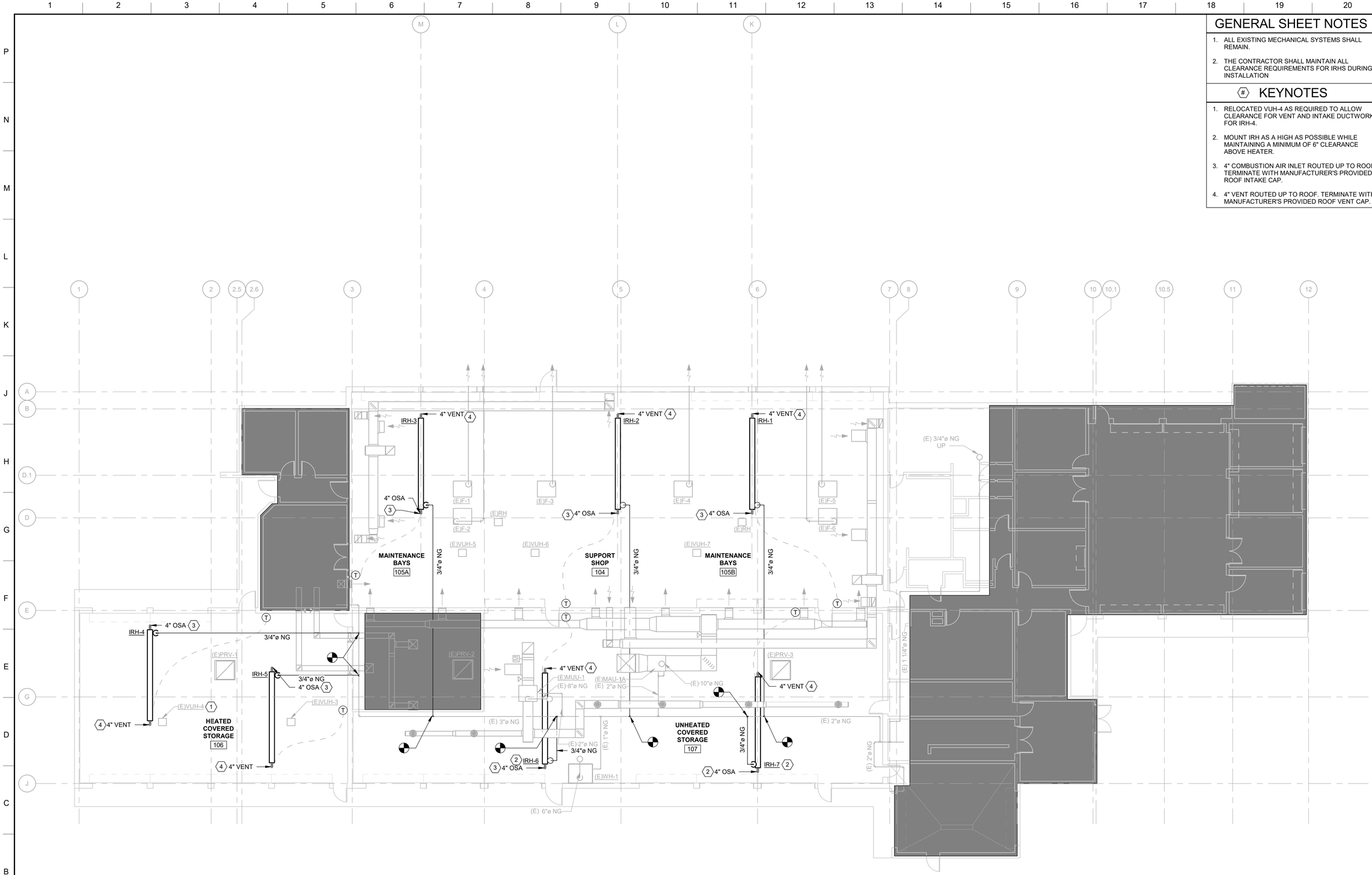

A1 MECHANICAL FLOOR PLAN
SCALE: 1" = 10'-0"

PLAN NORTH

0 0.5' 1' 2'
SCALE: 1"=1'-0"

MARK	DESCRIPTION	DATE
5	CORRECTED NG PIPE DIAMETER	22 JUN 2026
4	ISSUE FOR CONSTRUCTION	29 MAY 2026
3	TYPE B-3 (100%) FINAL DESIGN	26 FEB 2026
2	TYPE B-2 (95%) PRE-FINAL DESIGN	18 JUL 2025
1	TYPE A-2 (35%) SUBMITTAL	10 APR 2024

ISSUE DATE: 29 MAY 2026
SOLICITATION NO.:
CONTRACT NO.:

DESIGNED BY: R.EARLIE
DRAWN BY: R.EARLIE
CHECKED BY: R.EARLIE
SUBMITTED BY: S. FORD
SIZE: ANSI D

NATIONAL GUARD BUREAU

TETRA TECH

105TH AIRLIFT WING, AIR NATIONAL GUARD BASE, STEWART INTERNATIONAL AIRPORT, MAGUIRE WAY, NEWBURGH, NY 12550
ENERGY: REPAIR BUILDING 200
FY2026
WHAY142004
MECHANICAL FLOOR PLAN

SHEET ID
M-101

95% SUBMITTAL

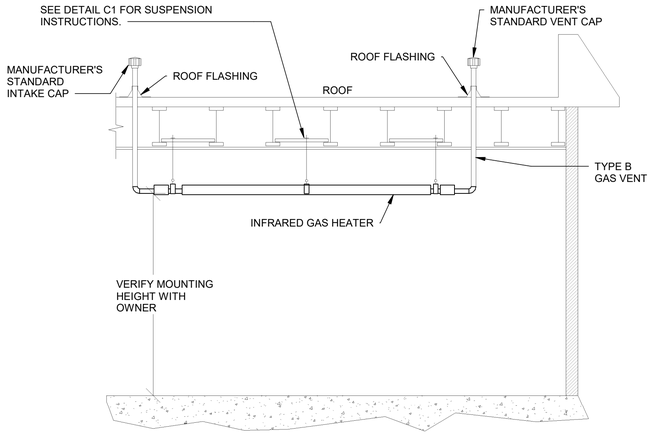

NOTES:
1. REFER TO PLANS FOR SIZES AND CONTINUATION.

K1 INFRARED HEATER
SCALE: NTS

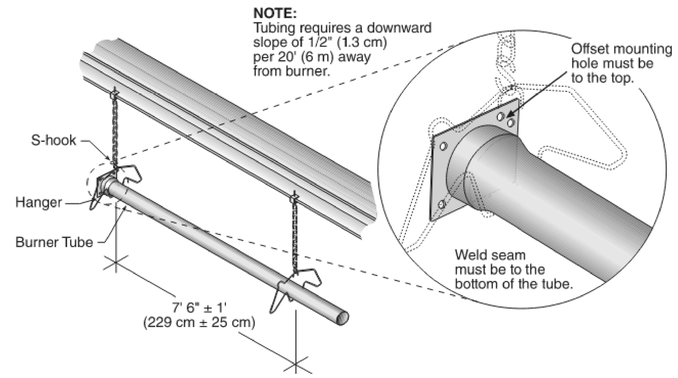

K7 BURNER TUBE INSTALLATION DETAIL
SCALE: NTS

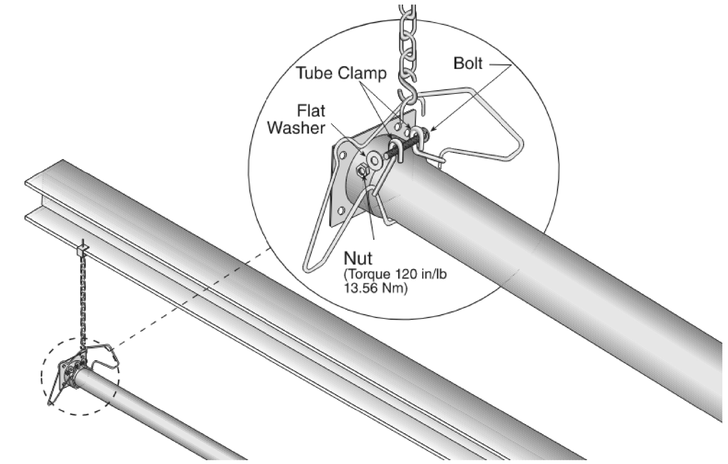

K14 TUBE CLAMP PACKAGE INSTALLATION DETAIL
SCALE: NTS

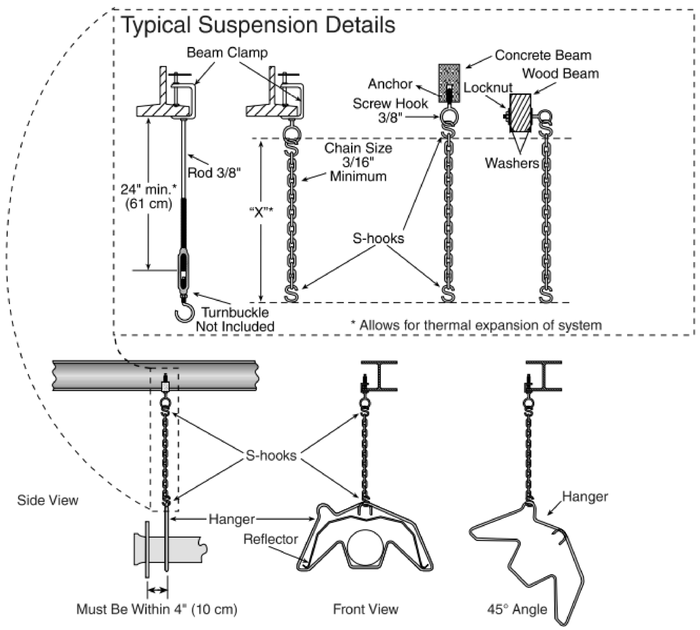

C1 TYPICAL SUSPENSION DETAILS
SCALE: NTS

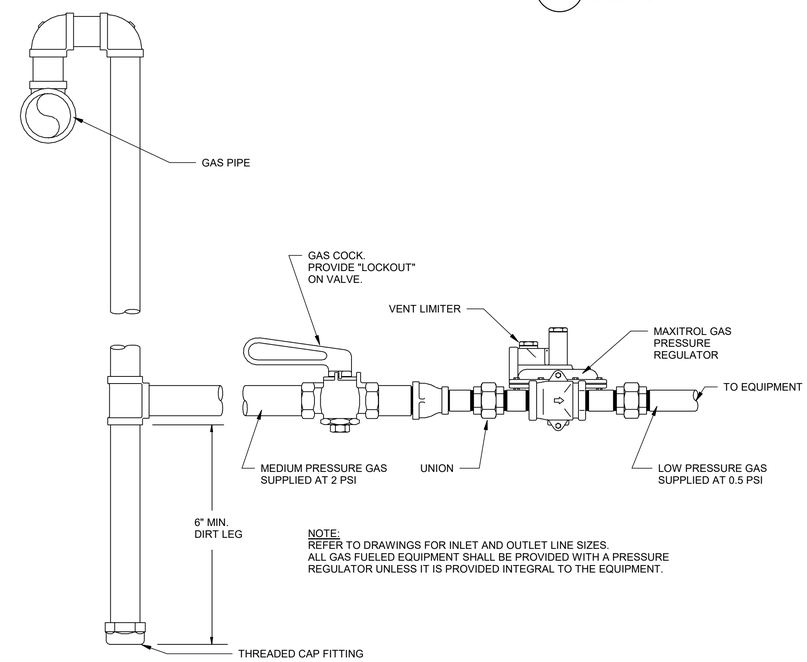

NOTE:
REFER TO DRAWINGS FOR INLET AND OUTLET LINE SIZES.
ALL GAS FUELED EQUIPMENT SHALL BE PROVIDED WITH A PRESSURE REGULATOR UNLESS IT IS PROVIDED INTEGRAL TO THE EQUIPMENT.

C9 GAS CONNECTION TO EQUIPMENT
SCALE: NTS

GAS FIRED RADIANT HEATER SCHEDULE

TAG	LOCATION	TYPE	INPUT (MBH)	OUTPUT (BTUH)	LENGTH (FT)	ELECTRICAL VOLTS	PH.	HZ.	VENT DIA. (IN)	COMB AIR DIA. (IN)	INLET PRESSURE (IN WC)	MOUNTING HEIGHT AFF (FT)	WEIGHT (LBS)	NOTES
IRH-1	105 - MAINTENANCE BAY	LOW INTENSITY	60	48,000	20	120	1	60	4	4	4.6	16	86	ALL
IRH-2	104 - SUPPORT SHOP	LOW INTENSITY	60	48,000	20	120	1	60	4	4	4.6	16	86	ALL
IRH-3	105 - MAINTENANCE BAY	LOW INTENSITY	60	48,000	20	120	1	60	4	4	4.6	16	86	ALL
IRH-4	106 - COVERED STORAGE	LOW INTENSITY	60	48,000	20	120	1	60	4	4	4.6	16	86	ALL
IRH-5	106 - COVERED STORAGE	LOW INTENSITY	60	48,000	20	120	1	60	4	4	4.6	16	86	ALL
IRH-6	107 - COVERED STORAGE	LOW INTENSITY	60	48,000	20	120	1	60	4	4	4.6	16	86	ALL
IRH-7	107 - COVERED STORAGE	LOW INTENSITY	60	48,000	20	120	1	60	4	4	4.6	16	86	ALL

NOTE:
1. PROVIDE PROGRAMMABLE THERMOSTATS. CONNECT THERMOSTATS TO EXISTING BAS.
2. PROVIDE DIRECT SPARK IGNITION.
3. PROVIDE STANDARD REFLECTOR.
4. PROVIDE A MINIMUM OF 6" CLEARANCE ABOVE HEATER, 63" BELOW HEATER AND 35" TO THE LEFT AND RIGHT OF HEATER.

MARK	DESCRIPTION	DATE
4	ISSUE FOR CONSTRUCTION	29 MAY 2026
3	TYPE B-3 (100%) FINAL DESIGN	26 FEB 2026
2	TYPE B-2 (95%) PRE-FINAL DESIGN	18 JUL 2025
1	TYPE A-2 (35%) SUBMITTAL	10 APR 2024

DESIGNED BY: R.EARLIE
DRAWN BY: R.EARLIE
CHECKED BY: S.FORD
SUBMITTED BY: S. FORD
SIZE: ANSI D
ISSUE DATE: 29 MAY 2026
SOLICITATION NO.:
CONTRACT NO.:

NATIONAL GUARD BUREAU

TETRA TECH

106TH AIRLIFT WING, AIR NATIONAL GUARD BASE, STEWART INTERNATIONAL AIRPORT, MAGUIRE WAY, NEWBURGH, NY 12550
ENERGY: REPAIR BUILDING 200
FY2026
WHAY142004

MECHANICAL DETAILS AND SCHEDULES

SHEET ID
M-501

95% SUBMITTAL

GENERAL SHEET NOTES

1. PHOTOS ARE PROVIDED TO SHOW AS-BUILT CONDITIONS. ALL EXISTING MECHANICAL AND ELECTRICAL COMPONENTS SHALL BE PRESERVED AND PROTECTED UNLESS OTHERWISE NOTED.

C1 105 MAINTENANCE BAY
LOOKING WEST 1
SCALE: NTS

C7 105 MAINTENANCE BAY
LOOKING WEST 2
SCALE: NTS

C14 105 MAINTENANCE BAY
LOOKING SOUTHWEST
SCALE: NTS

105th AIRLIFT WING

MARK	DESCRIPTION	DATE
4	ISSUE FOR CONSTRUCTION	29 MAY 2026
3	TYPE B-3 (100%) FINAL DESIGN	26 FEB 2026
2	TYPE B-2 (95%) PRE-FINAL DESIGN	18 JUL 2025
1	TYPE A-2 (35%) SUBMITTAL	10 APR 2024

DESIGNED BY: R.EARLIE
DRAWN BY: R.EARLIE
CHECKED BY: S.COLLINS
SUBMITTED BY: S. FORD
SIZE: ANSI D
ISSUE DATE: 29 MAY 2026
SOLICITATION NO.:
CONTRACT NO.:

NATIONAL GUARD BUREAU

TETRA TECH

105TH AIRLIFT WING, AIR NATIONAL GUARD BASE, STEWART INTERNATIONAL AIRPORT, MAGUIRE WAY, NEWBURGH, NY 12550
ENERGY: REPAIR BUILDING 200
FY2026
WHAY142004
MECHANICAL PHOTOS

SHEET ID
M-502

95% SUBMITTAL

GENERAL SHEET NOTES

1. PHOTOS ARE PROVIDED TO SHOW AS-BUILT CONDITIONS. ALL EXISTING MECHANICAL AND ELECTRICAL COMPONENTS SHALL BE PRESERVED AND PROTECTED UNLESS OTHERWISE NOTED.

C3 107 COVERED STORAGE
LOOKING NORTH
SCALE: NTS

C11 107 COVERED STORAGE
LOOKING SOUTH
SCALE: NTS

MARK	DESCRIPTION	DATE
4	ISSUE FOR CONSTRUCTION	29 MAY 2026
3	TYPE B-3 (100%) FINAL DESIGN	26 FEB 2026
2	TYPE B-2 (95%) PRE-FINAL DESIGN	18 JUL 2025
1	TYPE A-2 (35%) SUBMITTAL	10 APR 2024

ISSUE DATE: 29 MAY 2026
SOLICITATION NO.:
CONTRACT NO.:

DESIGNED BY: R.EARLIE
DRAWN BY: R.EARLIE
CHECKED BY: S.SOULIS
SUBMITTED BY: S. FORD
SIZE: ANSI D

NATIONAL GUARD BUREAU

TETRA TECH

106TH AIRLIFT WING, AIR NATIONAL GUARD BASE, STEWART INTERNATIONAL AIRPORT, MAGUIRE WAY, NEWBURGH, NY 12550
ENERGY: REPAIR BUILDING 200
FY2026
WHAY142004
MECHANICAL PHOTOS

SHEET ID
M-503

95% SUBMITTAL

GENERAL SHEET NOTES

1. PHOTOS ARE PROVIDED TO SHOW AS-BUILT CONDITIONS. ALL EXISTING MECHANICAL AND ELECTRICAL COMPONENTS SHALL BE PRESERVED AND PROTECTED UNLESS OTHERWISE NOTED.

C3 108 COVERED STORAGE
LOOKING NORTH
SCALE: NTS

C11 108 COVERED STORAGE
LOOKING SOUTH
SCALE: NTS

US Army Corps of Engineers ®

MARK	DESCRIPTION	DATE
4	ISSUE FOR CONSTRUCTION	29 MAY 2026
3	TYPE B-3 (100%) FINAL DESIGN	26 FEB 2026
2	TYPE B-2 (100%) PRE-FINAL DESIGN	18 JULY 2025
1	TYPE A-2 (35%) SUBMISSIONS	10 APR 2024

ISSUE DATE: 29 MAY 2026
SOLICITATION NO.:
CONTRACT NO.:

DESIGNED BY: R.EARLIE
DRAWN BY: R.EARLIE
CHECKED BY: S.COLLINS
SUBMITTED BY: S. FORD
SIZE: ANSI D

US ARMY CORPS OF ENGINEERS

TETRA TECH

108TH AIRLIFT WING, AIR NATIONAL GUARD BASE, STEWART INTERNATIONAL AIRPORT, NEWBURGH, NY 12550
ENERGY ASSESSMENT, ADDENDUM
FY2026
WHAY142004

MECHANICAL PHOTOS

SHEET ID
M-504

95% SUBMITTAL

GAS-FIRED INFRARED HEATER CONTROL LOGIC DIAGRAM

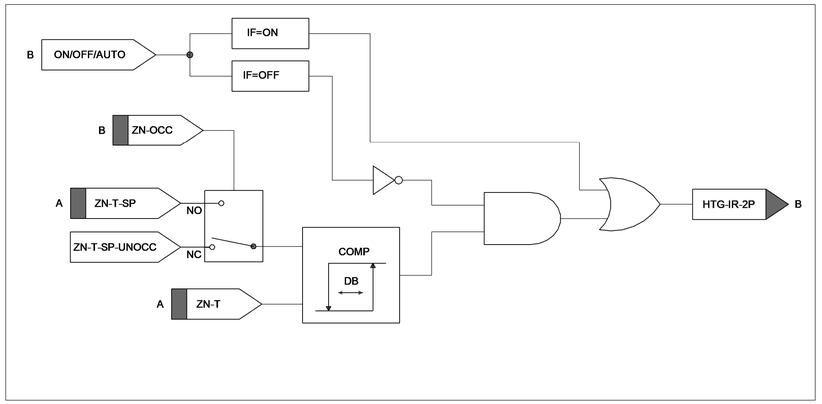

GAS-FIRED INFRARED HEATER CONTROL SYSTEM SCHEMATIC

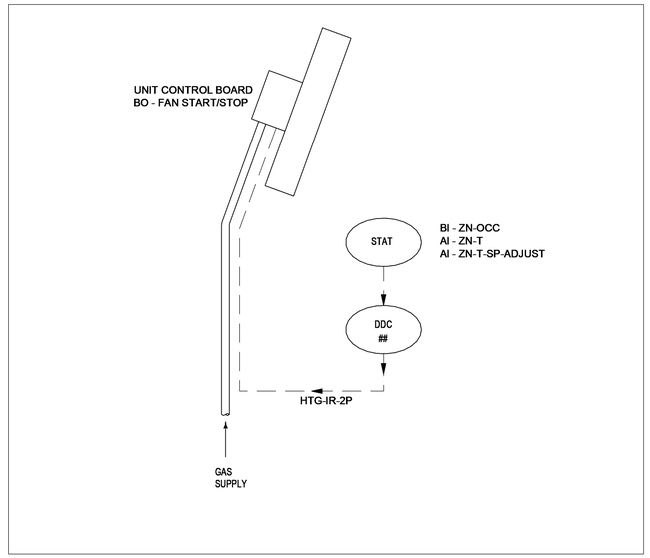

THERMOSTAT SCHEDULE

SYSTEM SERVICE	SPACES SERVED	STAT LOCATION	ZN-T DISPLAY	ZN-T-SP ADJUST	UNOCC OVERRIDE	UNOCC OVERRIDE TIME	NOTES/SETPOINTS
IRH-1 THRU 7	SEE PLANS	SEE PLANS	CURRENT/ SETPOINT TEMP°F	X	YES	1 HOUR (ADJ.)	OCC = 65 °F UNOCC = 55°F (ADJ.)

OCCUPANCY SCHEDULE

SYSTEM DEFAULT SCHEDULE		SUPERVISORY MONITORING & CONTROL SCHEDULE		
OCCUPIED	UNOCCUPIED	OCCUPIED	UNOCCUPIED	WARM-UP
M-F 0530-1900	OTHERWISE	M-F 0800-1800	OTHERWISE	N/A

GAS-FIRED INFRARED HEATER:

INSTALL DDC HARDWARE TO PERFORM THIS SEQUENCE OF OPERATION AND TO PROVIDE INPUTS AND OUTPUTS AS SPECIFIED AND SHOWN ON THE POINTS SCHEDULE. UNLESS OTHERWISE SPECIFIED, ALL MODULATING CONTROL SHALL BE PROPORTIONAL-INTEGRAL (PI) CONTROL. ALL SEQUENCES INDICATED FIO ARE FOR INFORMATION ONLY FOR INTERNAL EQUIPMENT OPERATION.

ON-OFF-AUTO:

ON: WITH THE TWO STAGE THERMOSTAT ON-OFF-AUTO IN THE ON POSITION,THE DDC HARDWARE SHALL ENERGIZE THE HEATER AND THE HEATER SHALL RUN CONTINUOUSLY.

OFF: WITH THE TWO STAGE THERMOSTAT ON-OFF-AUTO IN THE OFF POSITION, THE DDC HARDWARE SHALL DE-ENERGIZE THE HEATER.

AUTO: WITH THE THERMOSTAT ON-OFF-AUTO IN THE AUTO POSITION, THE DDC HARDWARE SHALL CONTROL THE HEATER FOLLOWING ITS OCCUPANCY MODE AND SEQUENCE BELOW.

OCCUPANCY MODES:

OCCUPIED: THE UNIT DDC HARDWARE SHALL BE IN THE OCCUPIED MODE WHEN THE INPUT FROM THE SYSTEM SCHEDULER IS OCCUPIED

UNOCCUPIED: THE UNIT DDC HARDWARE SHALL BE IN THE UNOCCUPIED MODE WHEN THE INPUT FROM THE SYSTEM SCHEDULER IS UNOCCUPIED

ZONE UNOCCUPIED OVERRIDE: A TIMED LOCAL OVERRIDE CONTROL SHALL ALLOW AN OCCUPANT TO OVERRIDE THE SCHEDULE AND PLACE THE UNIT INTO AN OCCUPIED MODE FOR AN ADJUSTABLE PERIOD OF TIME. AT THE EXPIRATION OF THIS TIME, CONTROL OF THE UNIT SHALL AUTOMATICALLY RETURN TO THE SCHEDULE.

HEATING ENABLE, PROOFS AND SAFETIES (FIO):

THE HEATER SHALL RUN SUBJECT TO THE UNIT MANUFACTURER'S PROOFS , SAFETIES, TIME DELAYS AND SEQUENCES. STARTING CIRCUIT SHALL INCLUDE AIR DIFFERENTIAL SWITCH (OPEN POSITION), FAN ENERGIZE, AIR FLOW PROOF (DIFFERENTIAL SWITCH CLOSE), AND IGNITION SEQUENCE WITH GAS FLAME SENSING. ONCE STARTING CIRCUIT IS PROVEN, SYSTEM SHALL OPERATE VIA ONE OR TWO STAGE RUNNING CIRCUIT UNTIL HEATING COMMAND IS DISABLED. ALARMS SHALL BE AS INDICATED BELOW.

SPACE TEMPERATURE CONTROL

OCCUPIED MODE: IN THE OCCUPIED MODE THE DDC HARDWARE SHALL ENABLE AND STAGE THE HEATER TO MAINTAIN THE SPACE TEMPERATURE SETPOINT PER THE THERMOSTAT SCHEDULE (ADJ.) OR AT THE OCCUPANT-ADJUSTABLE SETPOINT VIA THE WALL-MOUNTED THERMOSTAT, AS INDICATED. THE HEATER SHALL OPERATE PER ITS INTERNAL PROOFS AND SAFETIES INCLUDING AIR PROVING SWITCH, FAN START/STOP, ETC.

UNOCCUPIED MODE: IN THE UNOCCUPIED MODE THE DDC HARDWARE SHALL OPERATE THE HEATER TO MAINTAIN SPACE TEMPERATURE SETPOINT PER THE THERMOSTAT SCHEDULE OR AT THE OCCUPANT-ADJUSTABLE SETPOINT VIA THE WALL-MOUNTED THERMOSTAT, AS INDICATED. THE HEATER SHALL OPERATE PER ITS INTERNAL PROOFS AND SAFETIES INCLUDING AIR PROVING SWITCH, FAN START/STOP, ETC.

ALARMS:

LOW ZONE TEMP: IF THE ZONE TEMPERATURE (ZN-T) IS 10 DEG F (ADJ.) LESS THAN THE HEATING SETPOINT (ZN-T-SP)
ALL READABLE EQUIPMENT ALARMS THROUGH BACNET INTERFACE INCLUDING TO BUT NOT LIMITING:
IGNITION FAILURE
REVERSE POLARITY
GAS VALVE ERROR
LINE VOLTAGE FREQUENCY ERROR
INTERNAL CONTROL ERROR
PRESSURE SWITCH ERROR

GAS FIRED INFRARED RADIANT HEATERS POINTS LIST

												ALARMING			PRIMARY POINT INFORMATION				NETWORK DATA EXCHANGE		OVERRIDES			ALARM INFORMATION		
FUNCTION	POINT NAME	DESCRIPTION	DDC HARDWARE ID	SETTING (WITH UNITS)	RANGE (WITH UNITS)	IO TYPE	HOA REQ'D	CONFIG. TYPE	M&C VIEW AND OVRD	LDP VIEW AND OVRD	TREND REQ'D	ALARM CONDITION (SEE NOTES)	ALARM PRIORITY	M&C ROUTING	OBJECT TYPE AND INSTANCE NUMBER (AND PROPERTY ID)	SNVT NAME	SNVT TYPE	NIAGARA ID	DATA FROM	DATA TO	OBJECT TYPE & INSTANCE NUMBER OR COMMANDABLE	SNVT NAME	SNVT TYPE	ALARM TYPE (PROVIDE DDC ID FOR REMOTE IN NOTES)	NOTIFICATION CLASS OBJECT INSTANCE NUMBER	CONFIGURATION INFORMATION
START/STOP	SYS-OCC-C	SYSTEM OCCUPANCY (FROM SYSTEM SCHEDULER)	<___>	~	OCC / UNOCC	<NET-IN>	~	~	VO	~	~	~	~	~	<___>	<___>	<___>	<___>	<___>	<___>	<___>	<___>	<___>	<___>	<___>	<___>
	SYS-OCC	SYSTEM OCCUPANCY (ACTUAL)	<___>	~	OCC / UNOCC	<NET-OUT>	~	~	V	V	X	~	~	~												
	ZN-OCC	ZONE OCCUPANCY OVERRIDE	<___>	~	OCCUPIED	< BI >	~	OC	V	V	X	~	~	~	<___>	<___>	<___>	<___>	<___>	<___>	<___>	<___>	<___>	<___>	<___>	<___>
	HTG-IR-2P	STAGED HEATING - TWO-POSITION	<___>	~	STAGE 1 / STAGE 2	< BO >	~	~	VO	V	X	~	~	~	<___>	<___>	<___>	<___>	<___>	<___>	<___>	<___>	<___>	<___>	<___>	<___>
ZONE TEMPERATURE CONTROL	ZN-T	ZONE TEMPERATURE	<___>	-	<___>	< AI >	~	~	V	V	X	LOW ZONE TEMP: IF ZN-T < (ZN-T-SP - 10 °F)	INFO	[X]	<___>	<___>	<___>	<___>	<___>	<___>	<___>	<___>	<___>	<___>	<___>	<___>
	ZN-T-SP	ZONE HEATING SETPOINT	<___>	65 °F (OCC) / 55 °F (UNOCC)	50 °F - 75 °F	< AV >	~	OC	V	V	X	~	~	~	<___>	<___>	<___>	<___>	<___>	<___>	<___>	<___>	<___>	<___>	<___>	<___>
	ZN-T-SP-ADJUST	ZONE SETPOINT - ADJUSTABLE	<___>	-	<___>	< AI >	~	~	V	V	X	~	~	~	<___>	<___>	<___>	<___>	<___>	<___>	<___>	<___>	<___>	<___>	<___>	<___>
OTHER POINTS	IR-ALM	INFRARED HEATER ALARM	<___>	-	<___>	<___>	~	~	V	V	X	SYSTEM INTERNAL FAULTS	CRIT	[X]	<___>	<___>	<___>	<___>	<___>	<___>	<___>	<___>	<___>	<___>	<___>	<___>

Notes:

1) THE CONTRACTOR SHALL COMPLETE THE POINTS SCHEDULE AS INDICATED IN THE SPECIFICATION AND IN ACCORDANCE WITH THE POINTS SCHEDULE INSTRUCTIONS DRAWING.
2) UNIT MANUFACTURERS PROOFS AND SAFETIES: THE CONTRACTOR SHALL SHOW EACH PROOF AND SAFETY AS A SEPARATE ROW.
3) DDC HW ID FOR DEVICE CONTAINING EVENT ENROLLMENT OBJECT FOR REMOTE ALARMING FOR THIS SYSTEM: <_____>

A1 RADIANT HEATER CONTROLS
SCALE: NTS

105th AIRLIFT WING

MARK	DESCRIPTION	DATE
4	ISSUE FOR CONSTRUCTION	29 MAY 2026
3	TYPE B-3 (100%) FINAL DESIGN	26 FEB 2026
2	TYPE B-2 (95%) PRE-FINAL DESIGN	18 JUL 2025
1	TYPE A-2 (35%) SUBMITTAL	10 APR 2024

DESIGNED BY: R.EARLIE
DRAWN BY: R.EARLIE
CHECKED BY: S.ROLLINS
SUBMITTED BY: S. FORD
SIZE: ANSI D
ISSUE DATE: 29 MAY 2026
SOLICITATION NO.:
CONTRACT NO.:

NATIONAL GUARD BUREAU

TETRA TECH

105TH AIRLIFT WING, AIR NATIONAL GUARD BASE, STEWART INTERNATIONAL AIRPORT, MAGUIRE WAY, NEWBURGH, NY 12550
ENERGY: REPAIR BUILDING 200
FY2026
WHAY142004
MECHANICAL CONTROLS

SHEET ID
M-901

95% SUBMITTAL