105TH AIRLIFT WING, AIR NATIONAL GUARD BASE, STEWART INTERNATIONAL AIRPORT, MAGUIRE WAY, NEWBURGH, NY 12550
ENERGY: REPAIR BUILDING 200
WHAY142004

TRUE NORTH

SOLICITATION NO.:

CONTRACT NO.: FA8903-21-D-0013 26

ISSUE DATE: FEBRUARY 2026

VOLUME: 1 OF 1

MARK	DESCRIPTION	DATE
4	ISSUE FOR CONSTRUCTION	29 MAY 2026
3	TYPE B-3 (100%) FINAL DESIGN	26 FEB 2026
2	TYPE B-2 (100%) PRE-FINAL DESIGN	18 JUL 2025
1	TYPE A-2 (35%) SUBMITTAL	10 APR 2024

ISSUE DATE: 29 MAY 2026
SOLICITATION NO.:
CONTRACT NO.: FA8903-21-D-0013

DESIGNED BY: M. REYNOLDS
DRAWN BY: S. AMIRI
CHECKED BY: A. TURBETT
SUBMITTED BY: S. FORD
SIZE: ANSI D

NATIONAL GUARD BUREAU
MAGUIRE WAY
NEWBURGH, NY 12550

TETRA TECH

105TH ARLIFT WING, AIR NATIONAL GUARD BASE, STEWART INTERNATIONAL AIRPORT, MAGUIRE WAY, NEWBURGH, NY 12550
ENERGY: REPAIR BUILDING 200
FY2026
WHAY142004
COVER SHEET

SHEET ID
G-001

100% SUBMITTAL

SHEET LIST

SHEET	SHEET NAME
GENERAL	
G-001	COVER SHEET
ARCHITECTURAL	
A-001	ABBREVIATIONS, LEGENDS, AND GENERAL NOTES
AD101	ARCHITECTURAL FIRST FLOOR PLAN - DEMOLITION
A-101	ARCHITECTURAL FIRST FLOOR PLAN – NEW WORK
A-102	ARCHITECTURAL ROOF PLAN – DEMO/NEW WORK
A-601	DOOR SCHEDULE, DOOR AND WINDOW TYPES – NEW WORK
A-602	OPENING DETAILS
A-603	OPENING DETAILS
MECHANICAL	
M-001	ABBREVIATIONS, LEGENDS, AND NOTES
M-101	MECHANICAL FLOOR PLAN
M-501	MECHANICAL DETAILS AND SCHEDULES
M-502	MECHANICAL PHOTOS
M-503	MECHANICAL PHOTOS
M-504	MECHANICAL PHOTOS
M-901	MECHNICAL CONTROLS
ELECTRICAL	
E-001	LEGEND,ABBREVIATIONS, AND NOTES
E-101	ELECTRICAL POWER PLAN
E-601	ELECTRICAL ONE-LINE DIAGRAM
E-602	ELECTRICAL SCHEDULES

MARK	DESCRIPTION	DATE
4	ISSUE FOR CONSTRUCTION	29 MAY 2026
3	TYPE B-3 (100%) FINAL DESIGN	26 FEB 2026
2	TYPE B-2 (100%) PRE-FINAL DESIGN	18 JUL 2025
1	TYPE A-2 (35%) SUBMITTAL	10 APR 2024

DESIGNED BY: M. REYNOLDS
DRAWN BY: S. AMIRI
CHECKED BY: A. TURBETT
SUBMITTED BY:
SIZE: ANSI D
ISSUE DATE: 29 MAY 2026
SOLICITATION NO.:
CONTRACT NO.: FA8903-21-D-0013

NATIONAL GUARD BUREAU
1 MAGUIRE WAY
NEWBURGH, NY 12550

TETRA TECH

105TH AIRLIFT WING, AIR NATIONAL GUARD BASE, STEWART INTERNATIONAL AIRPORT, MAGUIRE WAY, NEWBURGH, NY 12550
ENERGY: REPAIR BUILDING 200
FY2026
WHAY142004
SHEET INDEX

SHEET ID
G-002

100% SUBMITTAL

ABBREVIATIONS

A	----------
A LABEL	A LABEL CLASS DOOR
A/C	AIR CONDITIONING UNIT
AB	ANCHOR BOLT
ABDN	ABANDON
ACC	ACCESSIBLE
ACI	AMERICAN CONCRETE INSTITUTE
ACOUST	ACOUSTIC(AL)
ACP	ACOUSTICAL CEILING PANEL
ACS	AUTOMATIC CONTROL SYSTEM
ACT	ACOUSTICAL CEILING TILE
ACU	AIR CONDITIONING UNIT
ADA	AMERICANS WITH DISABILITIES ACT
ADD	ADDITIONAL
ADMIN	ADMINISTRATION
AFF	ABOVE FINISH FLOOR
AFG	ABOVE FINISH GRADE
AHU	AIR HANDLING UNIT
AIB	AIR INFILTRATION BARRIER
AISC	AMERICAN INSTITUTE OF STEEL CONSTRUCTION
ALT	ALTERNATE
ALUM	ALUMINUM
ANOD	ANODIZE
APPROX	APPROXIMATE(LY)
APVD	APPROVED
AR	AS REQUIRED
ARCH	ARCHITECT(URAL)
ASC	ABOVE SUSPENDED CEILING
ASSY	ASSEMBLY
ATFP	ANTI-TERRORISM / FORCE PROTECTION
AVG	AVERAGE
AW	ARCHITECTURAL WOODWORK
AWT	ACOUSTICAL WALL TREATMENT
B	----------
B LABEL	B LABEL CLASS DOOR
BALC	BALCONY
BB	BASEBOARD
BD	BOARD
BFF	BELOW FINISH FLOOR
BHMA	BUILDER'S HARDWARE MANUFACTURER'S ASSOCIATION
BL	BASELINE
BLDG	BUILDING
BLKG	BLOCKING
BLT IN	BUILT-IN
BM	BEAM
BN	BULLNOSE
BOF	BOTTOM OF FOOTING
BOS	BOTTOM OF STEEL
BOT	BOTTOM
BP	BUILDING PAPER
BRG	BEARING
BRKT	BRACKET
BSMT	BASEMENT
BTWN	BETWEEN
BUR	BUILT UP ROOF
C	----------
C	CENTER POINT
C CONC	CAST CONCRETE
C LABLE	C LABEL CLASS DOOR
C-C	CENTER TO CENTER
CAB	CABLE
CATW	CATWALK
CAV	CAVITY
CB	CEMENTITIOUS (BACKER) BOARD
CBB	CEMENTITIOUS BACKER BOARD
CD	CONSTRUCTION DOCUMENT(S)
CDW	CHILLED DRINKING WATER
CEM PLAS	CEMENT PLASTER
CER	CERAMIC
CF	CONTRACTOR FURNISHED
CF/CI	CONTRACTOR FURNISHED/ CONTRACTOR INSTALLED
CFE	CONTRACTOR FURNISHED EQUIPMENT
CFLG	COUNTER FLASHING
CFM	CUBIC FEET PER MINUTE
CFMF	COLD FORM METAL FRAMING
CFS	CUBIC FEET PER SECOND
CFT	CERAMIC FLOOR TILE
CG	CORNER GUARD
CI	CAST IRON
CJ	CONTROL JOINT
CL	CENTER LINE
CLG	CEILING
CLG DIFF	CEILING DIFFUSER
CLG HT	CEILING HEIGHT
CLL	COLUMN LINE
CLO	CLOSET
CLR	CLEAR
CLRM	CLASSROOM
CMU	CONCRETE MASONRY UNIT
CNDS	CONDENSATE
CO	CLEANOUT
COL	COLUMN
COMM	COMMUNICATIONS
CONC	CONCRETE
CONC FLR	CONCRETE FLOOR
CONF	CONFERENCE
CONST	CONSTRUCTION
CONT	CONTINUOUS
COORD	COORDINATE
CORR	CORRIDOR
CP	CONCRETE PIPE
CPT	CARPET
CR	CONTROL ROOM
CS	CAST STONE
CSWK	CASEWORK
CT	CERAMIC TILE
CTB	CERAMIC TILE - BASE
CTF	CERAMIC TILE - FLOOR
CTR	CENTER

CTW	CERAMIC TILE - WALL
CU FT	CUBIC FEET
CW	CASEMENT WINDOW
CWT	CERAMIC WALL TILE
D	----------
D	DEPTH
D LABEL	D LABEL CLASS DOOR
DBL	DOUBLE
DEMO	DEMOLISH
DEPT	DEPARTMENT
DET	DETAIL
DF	DRINKING FOUNTAIN
DIA	DIAMETER
DIAG	DIAGONAL
DIM	DIMENSION
DIST	DISTANCE
DK	DECK
DN	DOWN
DOC	DOCUMENT
DR	DOOR
DS	DOWNSPOUT
DWG(S)	DRAWING(S)
E	----------
E	EAST
E LABEL	E LABEL CLASS DOOR
EA	EACH
EF	EACH FACE
EIFS	EXTERIOR INSULATION AND FINISH SYSTEM
EJ	EXPANSION JOINT
EL	ELEVATOR
ELEC	ELECTRIC(AL)
ELEV	ELEVATION
ENGR	ENGINEER
ENTR	ENTRY
EOG	EDGE OF GUTTER
EP	EXPLOSION PROOF
EPS	EXPANDED POLYSTYRENE BOARD
EQ	EQUAL
EQUIP	EQUIPMENT
EW	EACH WAY
EWC	ELECTRIC WATER COOLER
EXIST	EXISTING
EXP	EXPOSED
EXP AB	EXPANSION ANCHOR BOLT
EXPN	EXPANSION
EXPT	EXTERIOR PAINT
EXT	EXTERIOR
EXT GR	EXTERIOR GRADE
F	----------
FA	FIRE ALARM
FAAP	FIRE ALARM ANNUNCIATOR PANEL
FAS BD	FASCIA BOARD
FC BRK	FACE BRICK
FCO	FLOOR CLEAN OUT
FD	FLOOR DRAIN
FDTN	FOUNDATION
FEC	FIRE EXTINGUISHER CABINET
FED	FEDERAL
FF	FINISH FLOOR
FF INSUL	FOIL FACED INSULAITON
FFE	FINISH FLOOR ELEVATION
FG	FINISH GRADE
FGL	FIBERGLASS
FH	FIRE HOSE
FIG	FIGURE
FIN	FINISH (ED)
FIXT	FIXTURE
FL	FLOOR
FLDG	FOLDING
FLEX	FLEXIBLE
FLMT	FLUSH MOUNTED
FLR	FLOOR
FLUOR	FLUORESCENT
FM	FACTORY MUTUAL
FOC	FACE OF CONCRETE
FOM	FACE OF MASONRY
FOS	FACE OF STEEL
FR	FIRE RESISTANT
FRG	FIBER REINFORCED GYPSUM
FRMG	FRAMING
FRP	FIBERGLASS REINFORCED PLASTIC
FRT	FIRE RETARDANT TREATED
FT	FOOT
FTG	FOOTING
FUR	FURRING
FWC	FABRIC WALLCOVERING
G	----------
GA	GAUGE
GAL	GALLON
GALV	GALVANIZED
GB	GRAB BAR
GFCI	GOVERNMENT FURNISHED / CONTRACTOR INSTALLED
GFCMU	GROUND FACE CONCRETE MASONRY UNIT
GL	GRID LINE
GLZ	GLAZING
GR FL	GROUND FLOOR
GRTG	GRATING
GS	GRATING SUPPORT
GV	GRAVEL
GWB	GYPSUM WALL BOARD
GYP	GYPSUM
H	----------
H	HORN
HB	HOSE BIB
HC	HOLLOW CORE
HDPE	HIGH DENSITY POLYETHYLENE
HDW	HARDWARE
HDWD	HARDWOOD

HEPA	HIGH EFFICIENCY PARTICULATE AIR FILTER
HGT	HEIGHT
HK	HOOK
HM	HOLLOW METAL
HORIZ	HORIZONTAL
HT	HEIGHT
HVAC	HEATING VENTILATION AND AIR CONDITIONING
HW, HDWR	HARDWARE
HYD	HYDRAULIC
I	----------
IBC	INTERNATIONAL BUILDING CODE
ICF	INSULATED CONCRETE FORM
IF	INSIDE FACE
IG	INSULATING GLASS
IJ	ISOLATION JOINT
ILO	IN LIEU OF
IN	INCH
INCAND	INCANDESCENT
INSUL	INSULATION
IRP	INSULATED ROOF PANEL
ITG	INSULATED TEMPERED GLASS
IWP	INSULATED WALL PANEL
J	----------
J	JUNCTION BOX
JAN	JANITOR
JST	JOIST
JT	JOINT
K	----------
KIT	KITCHEN
KPD	KEYPAD
KPL	KICKPLATE
L	----------
LAM	LAMINATE
LAV	LAVATORY
LBR	LUMBER
LBS	POUNDS
LDG	LANDING
LF	LINEAR FOOT (FEET)
LG	LONG
LIB	LIBRARY
LIN	LINEAR
LKR	LOCKER
LLH	LONG LEG HORIZONTAL
LLV	LONG LEG VERTICAL
LNT	LINTEL
LOC	LOCATION
LP	LIGHT POLE
LS	LABORATORY SINK
LT	LIGHT
LVDR	LOUVER DOOR
LVR	LOUVER
M	----------
M	METERS
MATL	MATERIAL
MAX	MAXIMUM
MB	MOISTURE BARRIER
MC	MOISTURE CONTENT
MD	METAL DECK
MECH	MECHANICAL (ROOM)
MEMB	MEMBRANE
MF	MILL FINISH
MFR	MANUFACTURER
MID	MIDDLE
MIN	MINIMUM
MIRR	MIRROR
MO	MASONRY OPENING
MOD	MODIFY
MODULAR	MD
MRGWB	MOISTURE RESISTANT GYPSUM WALLBOARD
MTD	MOUNTED
MTG	MOUNTING
MTL	METAL
MWP	MEMBRANE WATERPROOFING
N	----------
N	NORTH
NA	NOT APPLICABLE
ND	NAPKIN DISPOSAL
NDS	NAPKIN DISPENSER
NE	NORTH EAST
NFPA	NATIONAL FIRE PROTECTION ASSOCIATION
NIC	NOT IN CONTRACT
NO	NUMBER
NOM	NOMINAL
NP	NO PAINT
NRC	NOISE REDUCTION COEFFICIENT
NTS	NOT TO SCALE
NW	NORTHWEST
O	----------
O TO O	OUT TO OUT
OA	OVERALL
OC	ON CENTER
OCC	OCCUPANCY
OD	OUTSIDE DIAMETER
OFCI	OWNER FURNISHED CONTRACTOR INSTALLED
OFF	OFFICE
OFOI	OWNER FURNISHED OWNER INSTALLED
OFRD	OVERFLOW ROOF DRAIN
OGL	OBSCURE GLASS
OPH	OPPOSITE HAND
OPNG	OPENING
OPP	OPPOSITE
OPQ	OPAQUE
OPR	OPERABLE
ORIG	ORIGINAL
OSB	ORIENTED STRAND BOARD
OTS	OPEN TO STRUCTURE
OWSJ	OPEN WEB STEEL JOINT

OZ	OUNCE
P	----------
PA	PUBLIC ADDRESS
PAR	PARAPET
PAT	PATTERN
PB	PULL BOX
PBD	PARTICLE BOARD
PCC	PRECAST CONCRETE
PCF	POUND PER CUBIC FOOT
PCT	PERCENT
PEMB	PRE-ENGINEERED METAL BUILDING
PERF	PERFORATED
PERM	PERIMETER
PERP	PERPENDICULAR
PH	PHASE
PIL	PILASTER
PL	PROPERTY LINE
PL GL	PLATE GLASS
PLAM	PLASTIC LAMINATE
PLAS	PLASTIC
PLBG	PLUMBING
PLG	PILING
PLYWD	PLYWOOD
PNL	PANEL
POC	POINT OF CONTACT
POLY	POLYSTYRENE
PP PL	PUSH/PULL PLATE
PR	PAIR
PRCST	PRECAST
PREFAB	PREFABRICATED
PRKG	PARKING
PS CONC	PRESTRESSED CONCRETE
PSF	POUNDS PER SQUARE FOOT
PSI	POUNDS PER SQUARE INCH
PT	PRESSURE TREATED
PTD	PAPER TOWEL DISPENSER
PTDR	PAPER TOWEL DISPENSER AND RECEPTACLE
PTN	PARTITION
PWR	POWER
Q	----------
QT	QUARRY TILE
QTY	QUANTITY
R	----------
R	RISER
RB	RUBBER BASE
RCP	REFLECTED CEILING PLAN
RD	ROOF DRAIN
REC	RECESSED
REF	REFERENCE
REFR	REFRIGERATOR
REM	REMOVABLE
REP	REPAIR
REQ	REQUIRE
REQ'D	REQUIRED
RESIL	RESILIENT
REV	REVISION
RF	RESILIENT FLOORING
RH	RIGHT HAND
RHR	RIGHT HAND REVERSE
RL	ROOF LEADER
RLG	RAILING
RM	ROOM
RO	ROUGH OPENING
RR	RESTROOM
RSD	ROLLING STEEL DOOR
RV	ROOF VENT
RVL	REVEAL
S	----------
S	SOUTH
S2S	SURFACE TWO SIDES
S4S	SURFACE FOUR SIDES
SAPC	SUSPENDED ACOUSTICAL PANEL CEILING
SATC	SUSPENDED ACOUSTICAL TILE CEILING
SB	SPLASH BLOCK
SC	SHOWER CURTAIN
SCHED	SCHEDULE
SCIF	SENSITIVE COMPARTMENTED INFORMATION FACILITY
SCR	SHOWER CURTAIN ROD
SCW	SOLID CORE WOOD
SCWD	SOLID CORE WOOD DOOR
SD	SMOKE DETECTOR
SE	SOUTH EAST
SF	SQUARE FOOT
SF	SQUARE FEET
SFTWD	SOFT WOOD
SGL	SINGLE
SH	SOAP HOLDER
SHR	SHOWER
SHT MTL	SHEET METAL
SHTHG	SHEATHING
SHV	SHELVING
SIM	SIMILAR
SJ	SCORED JOINT
SKLT	SKYLIGHT
SLNT	SEALANT
SLR	SEALER
SM	SQUARE METER
SMHD	SHELF METAL HEAVY DUTY
SMK	SMOKE
SMLS	SEAMLESS
SND	SANITARY NAPKIN AND TAMPON DISPENSER
SP EL	SPOT ELEVATION
SPEC	SPECIFICATIONS
SPF	SPRAY APPLIED POLYURETHANE FOAM INSULATION
SQ	SQUARE
SQ FT	SQUARE FOOT (FEET)
SQ IN	SQUARE INCH
SQ M	SQUARE METER

SQ YD	SQUARE YARD
SS	STAINLESS STEEL
SSMR	STANDING SEAM METAL ROOF
ST	STAIRS
STC	SOUND TRANSMISSION CLASS
STD	STANDARD
STL	STEEL
STL JST	STEEL JOIST
STL RF DK	STEEL ROOF DECK
STOR	STORAGE
STR	STRINGER
STRB/HRN	STROBE / HORN
STRUCT	STRUCTURE(AL)
SUB FL	SUB FLOOR
SUSP	SUSPENDED
SV	SHEET VINYL
SW	SOUTHWEST
SYM	SYMMETRICAL
T	----------
T	TREAD
T&G	TONGUE AND GROOVE
T/S	TUB / SHOWER
TB	TOWEL BAR
TC	TERRA COTTA
TD	TRAVEL DISTANCE
TEL	TELEPHONE
TEMP	TEMPORARY
TER	TERRAZZO
TFF	TOP OF FINISH FLOOR
THK	THCKNESS
TK BD	TACK BOARD
TLT	TOILET
TMPD GL	TEMPERED GLASS
TN	TRUE NORTH
TOF	TOP OF FOOTING
TOM	TOP OF MASONRY
TOP	TOP OF PARAPET
TOPO	TOPOGRAPHY
TOS	TOP OF SLAB
TR	TELECOMMUNICATION ROOM
TRANS	TRANSOM
TRTD	TREATED
TS	TUBE STEEL
TV	TELEVISION
TYP	TYPICAL
U	----------
UNF	UNFINISHED
UNO	UNLESS NOTED OTHERWISE
UR	URINAL
V	----------
VB	VAPOR BARRIER
VCT	VINYL COMPOSITION TILE
VERT	VERTICAL
VEST	VESTIBULE
VR	VAPOR RETARDER
VTC	VIDEO TELECONFERENCE
VTR	VENT THROUGH ROOF
W	----------
W	WEST
W/	WITH
W/O	WITHOUT
WC	WATER CLOSET
WD	WOOD
WG	WIRE GLASS
WOM	WALK OFF MAT
WR	WASTE RECEPTACLE
WRB	WEATHER RESISTANT BARRIER
WRGWB	WATER RESISTANT GYPSUM WALLBOARD
WS	WATER STOP
WTP	WATER TREATMENT PLANT
WWTP	WASTE WATER TREATMENT PLANT

GENERAL NOTES

1. THE DRAWINGS INDICATE THE GENERAL EXTENT OF WORK. ANY WORK REQUIRED TO PROVIDE THE SCOPE OF WORK GRAPHICALLY INDICATED BY THESE DRAWINGS IS PART OF THE SCOPE OF THE CONSTRUCTION CONTRACT. IN THE EVENT ANY WORK IS INDICATED GRAPHICALLY AND NOT NOTED, THE CONSTRUCTION CONTRACTOR SHALL BE EXPECTED TO CONSTRUCT THE DESIGN USING INFORMATION AND TYPICAL OR SIMILAR DETAILS PROVIDED IN THE CONSTRUCTION DOCUMENTS.
2. THE CONTRACTOR SHALL PROMPTLY REPORT TO THE CONTRACTING OFFICER ANY ERRORS, INCONSISTENCIES OR OMISSIONS IN THE CONTRACT DOCUMENTS DISCOVERED BY OR MADE KNOWN TO THE CONTRACTOR PRIOR TO ORDERING OF ANY MATERIALS OR PROCEEDING WITH THE WORK AS A REQUEST FOR INFORMATION IN SUCH FORM AS THE CONTRACTING OFFICER MAY REQUIRE.
3. MECHANICAL, ELECTRICAL, STRUCTURAL AND PLUMBING INFORMATION ON THE ARCHITECTURAL DRAWINGS IS PROVIDED FOR CLARITY AND / OR LOCATION PURPOSES ONLY, SEE RELEVANT DISCIPLINE DRAWINGS FOR SPECIFIC INFORMATION.
4. FLASHING COLOR TO MATCH ADJACENT WALL COLOR UNLESS NOTED OTHERWISE.
5. ALL WORK SHALL COMPLY WITH APPLICABLE BUILDING CODES, ORDINANCES AND REGULATORY AGENCIES. DISCREPANCIES SHALL BE BROUGHT TO THE CONTRACTING OFFICER'S ATTENTION PRIOR TO PROCEEDING WITH THE WORK.
6. ROOM AND DOOR NUMBERS SHOWN ON DRAWINGS FOR CONSTRUCTION PURPOSES ONLY.
7. ALL WOOD IN CONTACT WITH CONCRETE OR MASONRY SHALL BE PRESERVATIVE TREATED WOOD.
8. WORK SHALL CONFORM TO APPLICABLE INDUSTRY AND MANUFACTURERS' PUBLISHED STANDARDS FOR QUALITY OF MATERIALS AND WORKMANSHIP, AS WELL AS REQUIREMENTS IN THESE DRAWINGS AND SPECIFICATIONS. ANY CONFLICTING REQUIREMENTS OF THE SOURCES LISTED ABOVE SHALL BE BROUGHT TO THE CONTRACTING OFFICER'S ATTENTION PRIOR TO PROCEEDING WITH THE WORK.
9. THE CONTRACTOR SHALL PROTECT EXISTING, IN-PLACE AND NEW WORK.
10. THE CONTRACTOR SHALL VERIFY DIMENSIONS AND SHALL VERIFY EXISTING CONDITIONS, SHOWN ON THESE DRAWINGS, AT THE SITE, THE CONTRACTOR SHALL NOTIFY THE CONTRACTING OFFICER IN WRITING OF ANY DISCREPANCIES, OMISSIONS AND OR CONFLICTS BEFORE COMMENCEMENT OF WORK. COMMENCEMENT OF WORK SHALL CONSTITUTE ACCEPTANCE OF ALL NEW OR EXISTING CONDITIONS.
11. ALL DISSIMILAR MATERIALS SHALL BE ISOLATED FROM EACH OTHER TO AVOID GALVANIC CORROSION.
12. PIPE DUCTS AND BUSS DUCTS THAT PENETRATE FLOOR SLABS OR WALL PARTITIONS SHALL BE INSTALLED IN A MANNER THAT WILL PRESERVE THE MOISTURE RESISTANCE, FIRE RATING, AIR AND/OR VAPOR BARRIER, AND STRUCTURAL INTEGRITY OF THE BUILDING.
13. PROVIDE FLASHING AND ENCLOSURES AS REQUIRED AT NEW MECHANICAL AND ELECTRICAL EXTERIOR WALL PENETRATIONS TO MAINTAIN WATER/WEATHER TIGHT SEAL AT WALL NEW PENETRATIONS. MATCH ADJACENT WALL MATERIAL FINISH AND COLOR.
14. PROVIDE SEALANT AND BACKER ROD BETWEEN HOLLOW METAL FRAME PERIMETERS AND SURROUNDING WALL CONSTRUCTION UNLESS OTHERWISE INDICATED.
15. PROVIDE SEALANT AND BACKER ROD BETWEEN INTERIOR AND EXTERIOR WINDOW AND STOREFRONT FRAME PERIMETERS AND SURROUNDING CONSTRUCTION UNLESS OTHERWISE INDICATED.
16. PROVIDE SEALANT AND BACKER RODAS REQUIRED BETWEEN DISSIMILAR MATERIALS SUCH AS GYPSUM BOARD AND MASONRY, MASONRY AND CONCRETE, COUNTERTOPS AND WALLS, ETC.
17. DO NOT BEGIN WORK THAT MAY REQUIRE COORDINATION, SUCH AS CEILING INSTALLATION, PRIOR TO FINAL SUBMITTAL OF MECHANICAL AND ELECTRICAL COORDINATION DRAWINGS TO CONTRACTING OFFICER NOR PRIOR TO RESOLUTION AND APPROVAL OF COORDINATION ISSUES.
18. MANUFACTURERS ARE REFERENCED TO ESTABLISH STYLE, SIZE, COLOR AND MATERIAL CHARACTERISTICS.
19. "ALIGN" AS USED IN THESE DOCUMENTS SHALL MEAN TO ACCURATELY LOCATE FINISHED FACES IN THE SAME PLANE AND/OR TO INSTALL NEW CONSTRUCTION ADJACENT TO EXISTING CONSTRUCTION WITHOUT ANY VISIBLE JOINTS OR SURFACE IRREGULARITIES.
20. "CLEAR" AS USED IN THESE DOCUMENTS SHALL MEAN THAT THE CONDITION IS NOT ADJUSTABLE WITHOUT APPROVAL OF THE CONTRACTING OFFICER. CLEAR DIMENSIONS ARE TYPICAL
21. "MAXIMUM" OR "MAX" AS USED IN THESE DOCUMENTS SHALL MEAN THAT THE CONDITION IS SLIGHTLY ADJUSTABLE BUT MAY NOT VARY TO A DIMENSION OR QUANTITY GREATER THAN THAT SHOWN WITHOUT APPROVAL OF THE CONTRACTING OFFICER.
22. "MINIMUM" OR "MIN" AS USED IN THESE DOCUMENTS SHALL MEAN THAT THE CONDITION IS SLIGHTLY ADJUSTABLE BUT MAY NOT VARY TO A DIMENSION OR QUANTITY LESS THAN THAT SHOWN WITHOUT APPROVAL OF THE CONTRACTING OFFICER.
23. "TYPICAL" AS USED IN THESE DOCUMENTS SHALL MEAN THAT THE CONDITION OR DIMENSION IS THE SAME OR REPRESENTATIVE FOR SIMILAR CONDITIONS THROUGHOUT.
24. "+/-" AS USED IN THESE DOCUMENTS SHALL MEAN THAT THE DIMENSION OR QUALITY IS SLIGHTLY ADJUSTABLE TO ACCOMMODATE ACTUAL CONDITIONS, FIELD VERIFICATION AND COORDINATION WITH OTHER ELEMENTS AS MIGHT BE NECESSARY.

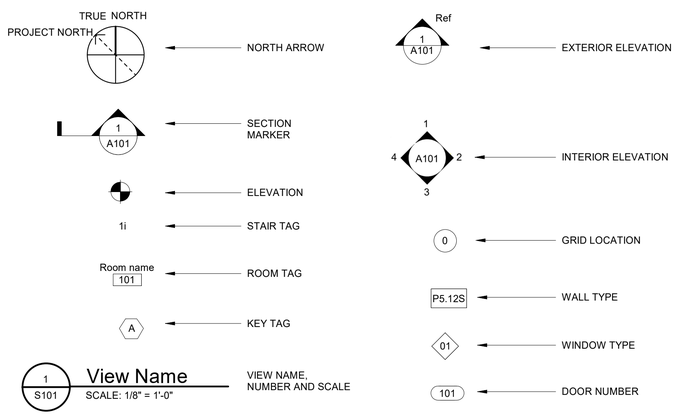

PROJECT SYMBOLS

MARK	DESCRIPTION	DATE
4	ISSUE FOR CONSTRUCTION	29 MAY 2026
3	TYPE B-3 (100%) FINAL DESIGN	26 FEB 2026
2	TYPE B-2 (100%) PRE-FINAL DESIGN	18 JUL 2025
1	TYPE A-2 (35%) SUBMITTAL	10 APR 2024

DESIGNED BY: M. REYNOLDS
DRAWN BY: S. AMIRI
CHECKED BY: C. FORBES
SUBMITTED BY:
SIZE: ANSI D
ISSUE DATE: 29 MAY 2026
SOLICITATION NO.:
CONTRACT NO.: FA8903-21-D-0013

NATIONAL GUARD BUREAU
1 MAGUIRE WAY
NEWBURGH, NY 12550

TETRA TECH

105TH AIRLIFT WING, AIR NATIONAL GUARD BASE, STEWART INTERNATIONAL AIRPORT, MAGUIRE WAY, NEWBURGH, NY 12550
ENERGY: REPAIR BUILDING 200
FY2026
WHAY142004
ABBREVIATIONS, LEGENDS, AND GENERAL NOTES

SHEET ID
A-001

100% SUBMITTAL

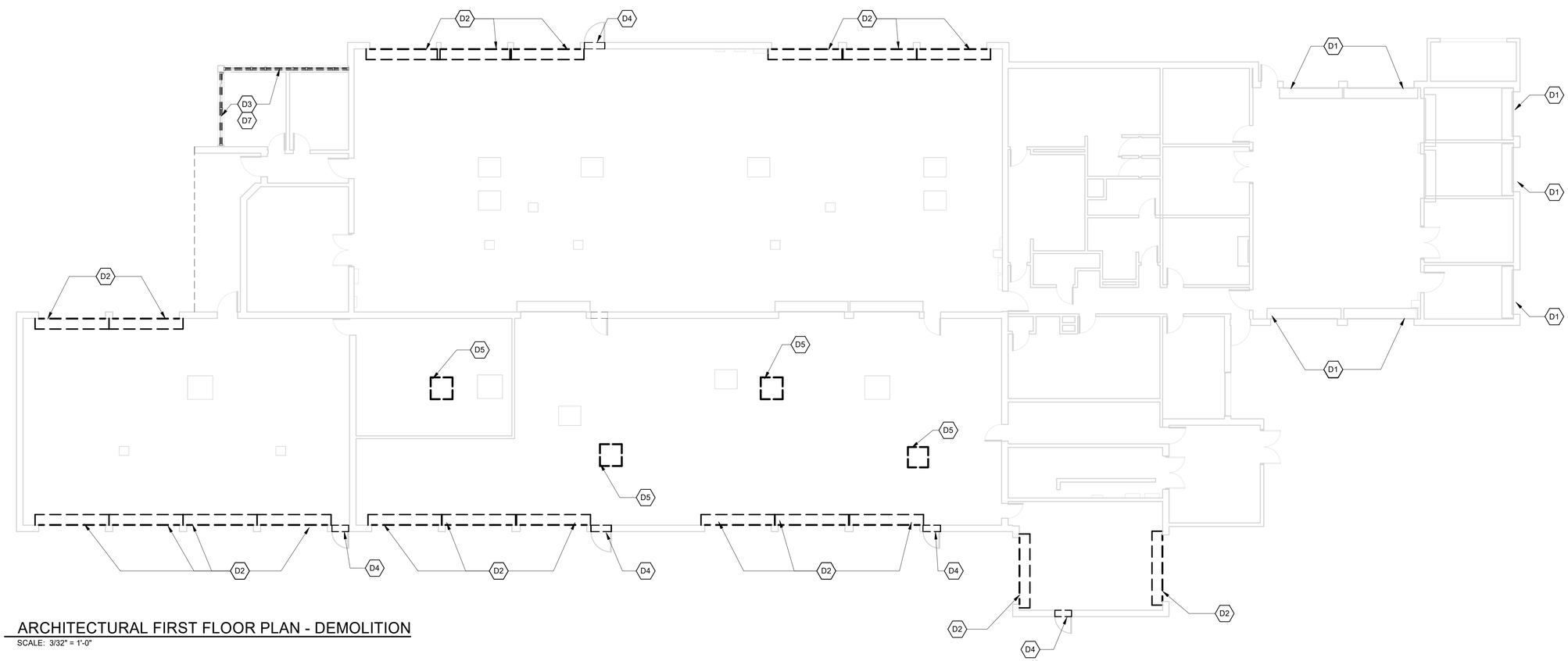

ARCHITECTURAL FIRST FLOOR PLAN - DEMOLITION

SCALE: 3/32" = 1'-0"

SHEET KEYNOTES

D1	EXISTING OVERHEAD DOOR, TRACK, MOTOR, CONTROLS, AND ETC . ARE NOT IN CONTRACT AND ARE TO REMAIN UNTOUCHED.
D2	EXISTING COILING OVERHEAD DOOR ASSEMBLY: REMOVE IN ITS ENTIRETY. INCLUDE ANCHORS, TRACKS, HARDWARE, MOTOR, CONTROLS, AND ASSOCIATED COMPONENTS. COORDINATE OPENING PREPARATION WITH NEW WORK.
D3	EXISTING WINDOW: REMOVE EXISTING WINDOW IN ITS ENTIRETY TO EXIST. MASONRY OPENING. INCLUDE FRAME AND SUBFRAME, SILL, FASTENERS, JOINT SEALANT, AND ALL ASSOCIATED COMPONENTS.
D4	EXISTING TRANSOM ABOVE PERSONNEL DOOR: REMOVE HOLLOW METAL STOPS AND 1" INSULATED GLASS IN ITS ENTIRETY. INCLUDE GASKETING ANCHORS, FASTENERS, AND ASSOCIATED COMPONENTS. COORDINATE OPENING PREPARATION WITH NEW WORK.
D5	EXISTING 4 FT. (NOM.) SQUARE SKYLIGHT ABOVE: REMOVE SKYLIGHT, GLAZING AND GLAZING FRAMING, AND REMOVE ROOF FLASHING AS REQUIRED TO INSTALL NEW INSULATED CAP AND PATCH/REPAIR EPDM FLASHING AS REQUIRED TO TIE INTO EXISTING EPDM ROOF SYSTEM. SEE DETAIL 12/A-602
D7	REMOVE EXISTING INTERIOR WINDOW TREATMENT AND STORE FOR REINSTALLATION BY CONTRACTOR.

SELECTIVE DEMOLITION - GENERAL NOTES

1. DASHED LINE INDICATES ITEM TO BE REMOVE. TYPICAL, UNO. REMOVAL INDICATED ON ARCHITECTURAL DRAWINGS DOES NOT NECESSARILY INDICATE FULL EXTENT OF DEMOLITION WORK. COORDINATE EXTENT OF DEMOLITION WITH NEW WORK FLOOR PLANS.

2. THE DEMOLITION CONTRACTOR SHALL CONFIRM IN FIELD ALL EXISTING CONDITIONS, INCLUDING BUT NOT LIMITED TO, EXISTING BEARING AND NON-BEARING WALLS AND IMMEDIATELY NOTIFY THE ARCHITECT OF ANY DISCREPANCIES. THE DEMOLITION CONTRACTOR SHALL VERIFY THESE CONDITIONS PRIOR TO THE COMMENCEMENT OF WORK.

3. REFER TO MECHANICAL, PLUMBING, AND ELECTRICAL DRAWINGS FOR SELECTIVE DEMOLITION SCOPE RELATED TO THOSE DISCIPLINES. IF THIS DRAWING SHOWS ELECTRICAL, PLUMBING, HVAC, AND OTHER SERVICES. IT IS FOR REFERENCE ONLY.

4. COORDINATE ALL WORK IDENTIFIED ON MECHANICAL, PLUMBING, AND ELECTRICAL DEMOLITION DRAWINGS WITH EACH OTHER PRIOR TO BEGINNING ANY DEMOLITION WORK. PRIME CONTRACTOR IS RESPONSIBLE TO FIELD VERIFY THESE CONDITIONS PRIOR TO COMMENCEMENT OF WORK, AND FOR COORDINATION WITH SUBCONTRACTORS.

5. ALL AREAS AND PARTITIONS NOT DASHED OR NOTED TO BE REMOVED SHALL REMAIN IN TACT. PATCH AND REPAIR EXISTING ADJACENT PARTITIONS AND FINISHES ARE REQUIRES AFTER DEMOLITION TO MATCH EXISTING, OR IN ACCORDANCE WITH NEW WORK PROPOSED RENOVATIONS.

6. EXTERIOR OPENINGS TEMPORARILY CREATED BY REMOVAL WORK; PROVIDE WEATHERTIGHT, SECURE BARRIER OVER OPENING. LEAVE OPENING CLEAN AND READY FOR SCHEDULED NEW WORK.

7. COORDINATE ALL DEMOLITION WORK, INCLUDING IDENTITIES, EXTENTS, AND REMOVAL TIMING OF ALL MATERIALS, WITH OWNER BEFORE PROCEEDING. CONFIRM IDENTITIES, HANDLING, AND STORAGE PROVISIONS OF STORED OR SALVAGED MATERIALS TO BE REUSED, REINSTALLED, OR HANDED OVER TO OWNER.

8. TRANSPORT AND LEGALLY DISPOSE OFF SITE ALL DEBRIS, TRASH, AND OTHER DISCARDED MATERIALS AND/OR EQUIPMENT RESULTING FROM DEMOLITION OPERATIONS. BURNING OF REMOVED MATERIALS IS NOT PERMITTED ON THE PROJECT SITE.

9. PROVIDE INTERIOR AND EXTERIOR SHORING, BRACING, OR OTHER SUPPORT TO PREVENT MOVEMENT, SETTLEMENT OR COLLAPSE OF ELEMENTS TO BE DEMOLISHED AND ADJACENT EXISTING ELEMENTS INDICATED TO REMAIN.

10. DISPERSE DEMOLITION EQUIPMENT THROUGHOUT STRUCTURE AND PROMPTLY REMOVE DEBRIS TO AVOID IMPOSING EXCESSIVE LOADS ON EXISTING ROOFS, SUPPORTING WALLS, FLOORS AND/OR FRAMING.

11. LOCATE AND IDENTIFY UTILITIES, INCLUDING SANITARY SEWER SYSTEM, AND DETERMINE THEIR CONDITION TO ENSURE ADEQUATE PERFORMANCE OF ALL UTILITIES IN NEW CONSTRUCTION. PROJECT UTILITY LINES AND HARDWARE DURING ALL DEMOLITION AND CONSTRUCTION PHASES.

12. ALL ASBESTOS MATERIAL WILL BE ABATED BY OTHERS PRIOR TO COMMENCEMENT OF WORK. IF HAZARDOUS MATERIALS ARE ENCOUNTERED DURING DEMOLITION OPERATIONS, NOTIFY OWNER AND ARCHITECT IMMEDIATELY. COMPLY WITH APPLICABLE REGULATIONS, LAWS , AND ORDINANCES CONCERNING REMOVAL, HANDLING, AND PROTECTION AGAINST EXPOSURE OR ENVIRONMENTAL POLLUTION.

PLAN NORTH

0 10 21 32

SCALE: 3/32"=1'-0"

MARK	DESCRIPTION	DATE
4	ISSUE FOR CONSTRUCTION	29 MAY 2026
3	TYPE B-3 (100%) FINAL DESIGN	26 FEB 2026
2	TYPE B-2 (100%) PRE-FINAL DESIGN	18 JUL 2025
1	TYPE A-2 (35%) SUBMITTAL	10 APR 2024

DESIGNED BY: M. REYNOLDS
DRAWN BY: S. AMIRI
CHECKED BY: A. TUFFET
SUBMITTED BY:
SIZE: ANSI D

ISSUE DATE: 29 MAY 2026
SOLICITATION NO.:
CONTRACT NO.: FA8903-21-D-0013

NATIONAL GUARD BUREAU
MAGUIRE WAY
NEWBURGH, NY 12550

TETRA TECH

105TH AIRLIFT WING, AIR NATIONAL GUARD BASE, STEWART INTERNATIONAL AIRPORT, MAGUIRE WAY, NEWBURGH, NY 12550
ENERGY: REPAIR BUILDING 200
FY2026
WHAY142004

ARCHITECTURAL FIRST FLOOR PLAN - DEMOLITION

SHEET ID

AD101

100% SUBMITTAL

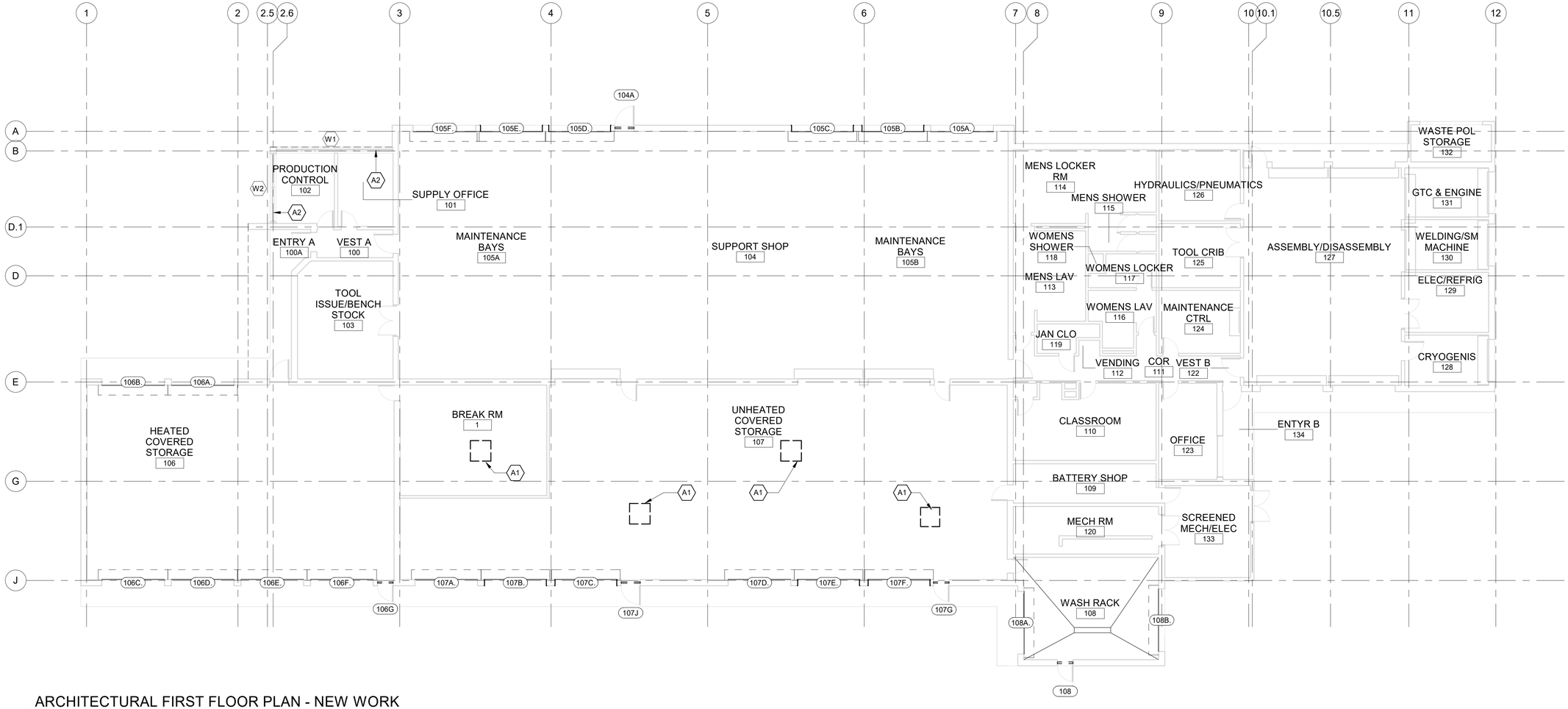

ARCHITECTURAL FIRST FLOOR PLAN - NEW WORK

SCALE: 3/32" = 1'-0"

SHEET KEYNOTES

A1 NEW INSULATED CAP (ABOVE). SEE A-102 ARCHITECTURAL ROOF PLAN - DEMOLITION AND NEW WORK FOR ADDITIONAL INFORMATION.

A2 REINSTALL EXISTING INTERIOR WINDOW TREATMENT BACK IN THEIR ORIGINAL POSITION.

GENERAL FLOOR PLAN NOTES

1. REFER TO SHEET A-102 ARCHITECTURAL ROOF PLAN - DEMOLITION AND NEW WORK FOR SKYLIGHT AND MECHANICAL WORK ASSOCIATED WITH GAS-FIRED INFARED HEATERS.
2. REFER TO DOOR SCHEDULE AND DOOR / FRAME ELEVATIONS FOR WORK ASSOCIATED WITH DOORS AND TRANSOMS ABOVE PERSONNEL DOORS. SEE SHEET A-601. ONLY DOORS TAGGED ON FLOOR PLAN WILL HAVE WORK ASSOCIATED WITH THEM.
3. REFER TO WINDOW ELEVATIONS ON SHEET A-601. ONLY WINDOWS TAGGED ON FLOOR PLAN WILL HAVE WORK ASSOCIATED WITH THEM.

PLAN NORTH

0 10 21 32

SCALE: 3/32"=1'-0"

MARK	DESCRIPTION	DATE
4	ISSUE FOR CONSTRUCTION	29 MAY 2026
3	TYPE B-3 (100%) FINAL DESIGN	26 FEB 2026
2	TYPE B-2 (100%) PRE-FINAL DESIGN	18 JUL 2025
1	TYPE A-2 (35%) SUBMITTAL	10 APR 2024

ISSUE DATE: 29 MAY 2026
SOLICITATION NO.:
CONTRACT NO.: FA8903-21-D-0013

DESIGNED BY: M. REYNOLDS
DRAWN BY: S. AMIRI
CHECKED BY: A. TURBET
SUBMITTED BY:
SIZE: ANSI D

NATIONAL GUARD BUREAU
1 MAGUIRE WAY
NEWBURGH, NY 12550

TETRA TECH

106TH AIRLIFT WING, AIR NATIONAL GUARD BASE, STEWART INTERNATIONAL AIRPORT, MAGUIRE WAY, NEWBURGH, NY 12550
ENERGY: REPAIR BUILDING 200
FY2026
WHAY142004

ARCHITECTURAL FIRST FLOOR PLAN – NEW WORK

SHEET ID

A-101

100% SUBMITTAL

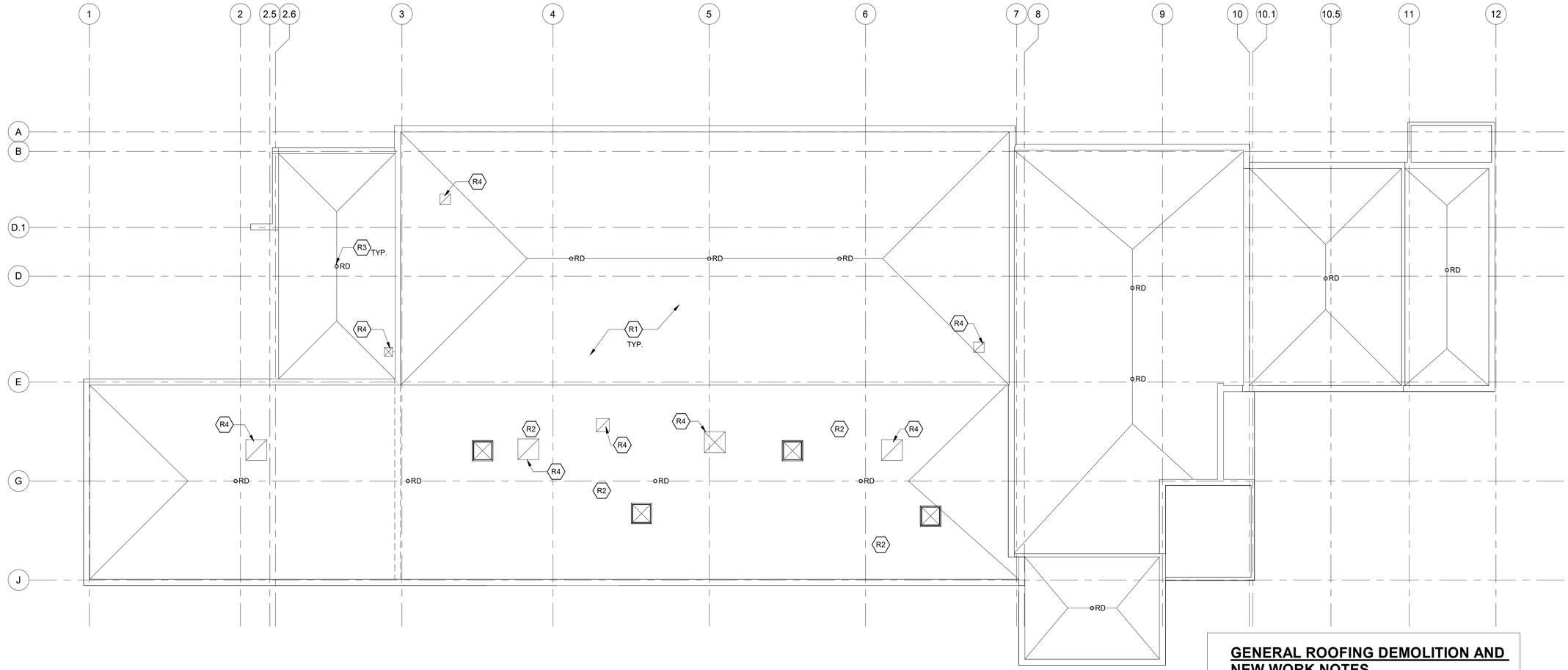

ROOF PLAN - DEMOLITION AND NEW WORK

SCALE: 3/32" = 1'-0"

SHEET KEYNOTES

R1	EXISTING EPDM ROOF SYSTEM TO REMAIN (TYP.)
R2	PROVIDE NEW 4' SQ (NOM) INSULATED CAP, ON EXIST. REMOVED SKYLIGHT UNIT CURBS. SEE DETAIL 12/A-602
R3	EXISTING ROOF DRAIN TO REMAIN (TYP.)
R4	COORDINATE LOCATION OF MECHANICAL PENETRATIONS WITH MECHANICAL DRAWINGS.

ROOF LEGEND:

⊠	4' - 0" X 4' - 0" INSULATED CAP (TYPICAL) - SEE KEYNOTE R2
○RD	EXISTING ROOF DRAINS TO REMAIN

GENERAL ROOFING DEMOLITION AND NEW WORK NOTES

1. EXISTING EPDM ROOFING SYSTEM TO REMAIN (TYP UNO). CONTRACTOR SHALL BE RESPONSIBLE FOR REPAIRS REQUIRED TO FIX DAMAGES FROM ROOF DEMOLITION AND NEW WORK.

2. CONTRACTOR SHALL VERIFY ALL PENETRATIONS AND CONDITIONS IN THE FIELD PRIOR TO THE SUBMISSION OF ALL BIDS AND NOTIFY THE ARCHITECT OF ANY DISCREPANCIES IMMEDIATELY.

3. ALL DIMENSIONS IF PROVIDED ON ROOF PLAN DRAWINGS ARE APPROXIMATE AND SHALL BE VERIFIED IN FIELD.

4. DRAWINGS ARE REPRESENTATIVE AND MAY NOT INDICATE ALL FIELD CONDITIONS. CONTRACTOR IS ADVISED TO VISIT THE SITE AND BECOME FAMILIAR WITH THE WORK PRIOR TO BIDDING. ALL EXISTING CONDITIONS SHALL BE VERIFIED IN FIELD.

5. CONTRACTOR IS RESPONSIBLE FOR MAINTAINING WATERTIGHT CONDITIONS AT ROOF AREAS BETWEEN OUTSIDE ELEMENTS AND INTERIOR FINISHES AT ALL TIMES DURING DURATION OF WORK.

6. CONTRACTOR TO TAKE NECESSARY PRECAUTIONS WHEN REMOVING ROOFING COMPONENTS TO ELIMINATE ANY DEBRIS THAT COULD FALL INTO OCCUPIED AREAS. PROVIDE PROTECTION BELOW ROOF DURING ALL DEMOLITION AND NEW WORK. COORDINATE WITH OWNER.

7. CONTRACTOR IS TO REMOVE AND LEGALLY DISPOSE OF ALL MATERIALS SCHEDULED FOR REMOVAL. SALVAGED ITEMS TO BE REUSED SHALL BE SAFELY STORED. COORDINATE STORAGE LOCATION WITH OWNER'S REPRESENTATIVE. CONTRACTOR SHALL CHECK WITH THE OWNER'S REPRESENTATIVE PRIOR TO REMOVING ANY MATERIAL FROM THE SITE.

8. THE CONTRACTOR AND/OR SUBCONTRACTOR SHALL PROVIDE FALL PROTECTION ELEMENTS AS REQUIRED BY OSHA 1926.501 AND 1926.502 (CURRENT VERSION), INCLUDING BUT NOT LIMITED TO: GUARDS AT WALLS AND FLOOR OPENINGS, BARRICADES, FENCES, TIE-OFF POINTS, ETC.

9. VERIFY ALL EXISTING CONDITIONS PRIOR TO BEGINNINGS ANY DEMOLITION ROOFING WORK. INSPECT AND ENSURE CONDITION OF ALL EXISTING ROOF DECKING, STRUCTURE, AND WOOD BLOCKING ARE SOLID AND SECURE. NOTIFY THE ARCHITECT IMMEDIATELY FOR DIRECTION IF DETERIORATED OR LOOSE MATERIALS ARE FOUND IN LOCATIONS WHERE EXISTING MATERIALS ARE DETAILED TO REMAIN.

10. CONTRACTOR SHALL COORDINATE LOCATION OF STAGING AREA WITH OWNER.

11. FOR ADDITIONAL INFORMATION, REFER TO SPECIFICATIONS.

PLAN NORTH

0 10 21 32

SCALE: 3/32"=1'-0"

MARK	DESCRIPTION	DATE
4	ISSUE FOR CONSTRUCTION	29 MAY 2026
3	TYPE B-3 (100%) FINAL DESIGN	26 FEB 2026
2	TYPE B-2 (100%) PRE-FINAL DESIGN	18 JUL 2025
1	TYPE A-2 (35%) SUBMITTAL	10 APR 2024

DESIGNED BY: M. REYNOLDS
DRAWN BY: S. AMIRI
CHECKED BY: A. TURBETT
SUBMITTED BY:
SIZE: ANSI D

ISSUE DATE: 29 MAY 2026
SOLICITATION NO.:
CONTRACT NO.: FA8903-21-D-0013

NATIONAL GUARD BUREAU
1 MAGUIRE WAY
NEWBURGH, NY 12550

TETRA TECH

105TH AIRLIFT WING, AIR NATIONAL GUARD BASE, STEWART INTERNATIONAL AIRPORT, MAGUIRE WAY, NEWBURGH, NY 12550
ENERGY: REPAIR BUILDING 200
FY2026
WHAY142004

ARCHITECTURAL ROOF PLAN – DEMO/NEW WORK

SHEET ID

A-102

100% SUBMITTAL

DOOR SCHEDULE

#	DOOR SIZE					FRAME			DETAILS				
NO.	WIDTH	HEIGHT	THICKNESS	MATERIAL	DOOR TYPE	MATERIAL	TYPE	TRANSOM GLAZING	HEAD	JAMB	SILL	HARDWARE SET	COMMENTS
104A	3' - 8"	7' - 2"	1 3/4"	HM-ETR	F	HM-ETR	I-ETR	IGL-1	8 / A-602	9 / A-602	10 / A-602	ETR	NEW INSULATED GLASS TRANSOM
105A	12' - 0"	16' - 0"	1"	IN.STL	OH	STL	2	-	8 / A-602	1 & 2 / A-602		-	MOTOR OPERATED
105B	12' - 0"	16' - 0"	1"	IN.STL	OH	STL	2	-	8 / A-602	2 & 6 / A 6-02		-	MOTOR OPERATED
105C	12' - 0"	16' - 0"	1"	IN.STL	OH	STL	2	-	8 / A-602	1 & 6 / A-602		-	MOTOR OPERATED
105D	12' - 0"	16' - 0"	1"	IN.STL	OH	STL	2	-	8 / A-602	4 & 6 / A -602		-	MOTOR OPERATED
105E	12' - 0"	16' - 0"	1"	IN.STL	OH	STL	2	-	8 / A-602	2 & 6 / A 6-02		-	MOTOR OPERATED
105F	12' - 0"	16' - 0"	1"	IN.STL	OH	STL	2	-	8 / A-602	1 & 2 / A-602		-	MOTOR OPERATED
106A	12' - 0"	16' - 0"	1"	IN.STL	OH	STL	2	-	8 / A-602	1 & 2 / A-602		-	MOTOR OPERATED
106B	12' - 0"	16' - 0"	1"	IN.STL	OH	STL	2	-	8 / A-602	1 & 2 / A-602		-	MOTOR OPERATED
106C	12' - 0"	16' - 0"	1"	IN.STL	OH	STL	2	-	8 / A-602	1 & 2 / A-602		-	MOTOR OPERATED
106D	12' - 0"	16' - 0"	1"	IN.STL	OH	STL	2	-	8 / A-602	2 & 5 / A-602		-	MOTOR OPERATED
106E	12' - 0"	16' - 0"	1"	IN.STL	OH	STL	2	-	8 / A-602	2 & 5 / A-602		-	MOTOR OPERATED
106F	12' - 0"	16' - 0"	1"	IN.STL	OH	STL	2	-	8 / A-602	2 & 5 / A-602		-	MOTOR OPERATED
106G	3' - 0"	7' - 2"	1 3/4"	HM-ETR	F-ETR	HM-ETR	1-ETR	IGL-1	9 / A-602	4 & 7 / A -602	10 / A-602	ETR	NEW INSULATED GLASS TRANSOM
107A	12' - 0"	16' - 0"	1"	IN.STL	OH	STL	2	-	8 / A-602	1 & 2 / A-602		-	MOTOR OPERATED
107B	12' - 0"	16' - 0"	1"	IN.STL	OH	STL	2	-	8 / A-602	2 & 6 / A 6-02		-	MOTOR OPERATED
107C	12' - 0"	16' - 0"	1"	IN.STL	OH	STL	2	-	8 / A-602	4 & 6 / A -602		-	MOTOR OPERATED
107D	12' - 0"	16' - 0"	1"	IN.STL	OH	STL	2	-	8 / A-602	1 & 2 / A-602		-	MOTOR OPERATED
107E	12' - 0"	16' - 0"	1"	IN.STL	OH	STL	2	-	8 / A-602	2 & 6 / A 6-02		-	MOTOR OPERATED
107F	12' - 0"	16' - 0"	1"	IN.STL	OH	STL	2	-	8 / A-602	4 & 6 / A -602		-	MOTOR OPERATED
107G	3' - 0"	7' - 2"	1 3/4"	HM-ETR	F-ETR	HM-ETR	1-ETR	IGL-1	8 / A-602	4 & 7 / A-602	10 / A-602	ETR	NEW INSULATED GLASS TRANSOM
107J	3' - 8"	7' -12"	1 3/4"	HM-ETR	F-ETR	HM-ETR	1-ETR	IGL-1	3 & 4 / A-602	9 / A-602	10 / A-602	ETR	NEW INSULATED GLASS TRANSOM
108	3' - 8"	7' - 2"	1 3/4"	HM-ETR	F-ETR	HM-ETR	1-ETR	IGL-1	11 / A-602	4 / A-602	10 / A-602	ETR	NEW INSULATED GLASS TRANSOM
108A	12' - 0"	16' - 0"	1"	IN.STL	OH	STL	2		8 / A-602	1 / A-602		-	MOTOR OPERATED
108B	12' - 0"	16' - 0"	1"	IN.STL	OH	STL	2		8 / A-602	1 / A-602		-	MOTOR OPERATED

NOTE: CONTRACTOR SHALL FIELD
VERIFY ALL DOOR OPENINGS AND WINDOW OPENINGS AND DETAILS
PERSONNEL DOORS ARE NOT BEING REPLACED, ONLY THE GLAZING (IGL-) ABOVE

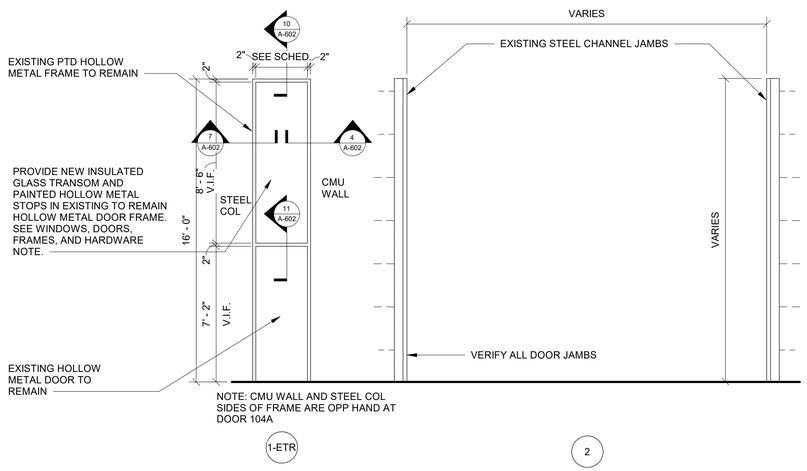

FRAME TYPES

SCALE: 1/4" = 1'-0"

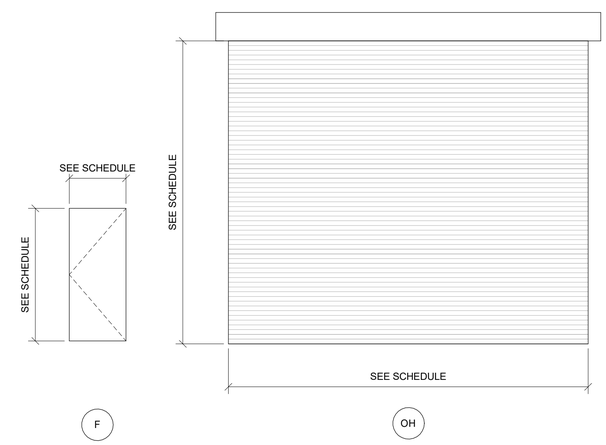

DOOR TYPES

SCALE: 1/4" = 1'-0"

WINDOW SCHEDULE

W#	R.O.		FRAME		GLAZING		DETAILS			
MARK	WIDTH	HEIGHT	FINISH	MATERIAL	TYPE	THICKNESS	HEAD	JAMB	SILL	COMMENTS
W1	23' -3"	2' - 8"	FF	ALUM	IGL-1	1"	3/A-603	2/A-603	1/A-603	
W2	13' -11"	2' - 8"	FF	ALUM	IGL-1	1"	3/A-603	2/A-603	1/A-603	

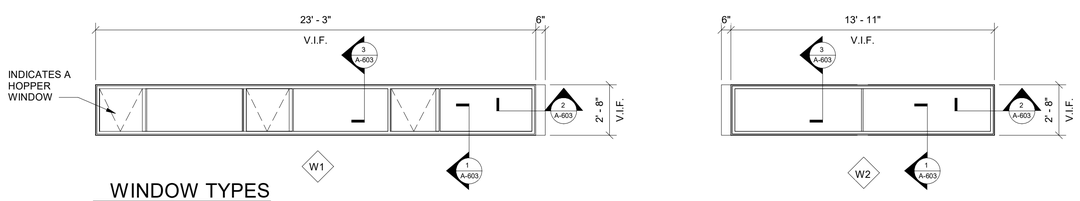

WINDOW TYPES

SCALE: 1/4" = 1'-0"

WINDOW AND DOOR SCHEDULE ABBREVIATIONS:

ALUM	ALUMINUM
ETR	EXISTING TO REMAIN
FF	FACTORY FINISH
HM	HOLLOW METAL
IGL	INSULATED GLAZING
IN-OH	INSULATED COILING OVERHEAD DOOR
PTD	PAINTED
STL	STEEL

WINDOWS, DOORS, FRAMES, AND HARDWARE NOTES:

1. ALL GLASS WINDOWS IN DOORS, HOLLOW METAL FRAMES, TRANSOMS AND FRAMES WILL REMAIN. ONLY TRANSOM GLAZING ABOVE DOOR WILL BE REPLACED.

2. ALL EXISTING DOOR/FRAME OPENINGS SHOWN ON DOOR SCHEDULE SHALL BE FIELD VERIFIED PRIOR TO SHOP DRAWING SUBMITTAL. IF EXISTING FIELD CONDITIONS DO NOT MATCH DRAWINGS, CONTRACTOR SHALL NOTIFY CONTRACTING OFFICER IMMEDIATELY IN WRITING FOR FURTHER INSTRUCTIONS.

3. PROVIDE 1" INSULATED GLASS IN EXISTING TRANSOM LOCATIONS NOTED ON DOOR SCHEDULE, INCLUDING, BUT NOT LIMITED TO, NEW PAINTED HOLLOW METAL STOPS TO MATCH EXISTING, STAINLESS STEEL FASTENERS, GLAZING BLOCKS, SHIMS, GASKETING, ETC. AS REQUIRED TO PROVIDE AND MAINTAIN A COMPLETE WEATHER-TIGHT SYSTEM

WINDOW NOTES:

1. SEE WINDOW SCHEDULE FOR HEAD/JAMB/SILL DETAILS.

2. FOR ALL EXISTING MASONRY WINDOW OPENINGS INDICATED TO RECEIVE NEW WINDOW, CONTRACTOR SHALL FIELD VERIFY PRIOR TO SHOP DRAWING SUBMITTAL IF EXISTING FIELD CONDITION DO NOT MATCH DRAWINGS, NOTIFY THE CONTRACTING OFFICER IMMEDIATELY IN WRITING FOR FURTHER INSTRUCTIONS.

3. ALL EXTERIOR WINDOW GLAZING TO BE IGL-1, TYPICAL UNLESS NOTED OTHERWISE.

4. RIBBON WINDOWS SHALL BE 1" INSULATED GLASS IN THERMALLY BROKEN ALUMINUM FRAME SYSTEM WITH AN ALUMINUM HEAD RECEPTOR AS REQUIRED TO MATCH EXISTING RIBBON WINDOWS.

5. WINDOW SHALL BE A COMBINATION OF FIXED PANELS AND OPERATIONAL PROJECTED-IN (HOPPER-TYPE) WINDOWS WITH FULL INSECT SCREENS AS REQUIRED TO MATCH EXISTING.

6. WINDOWS SHALL BE FIXED PANEL UNITS UNLESS NOTED OTHERWISE.

0 2' 4' 8'
SCALE: 1/4"=1'-0"

105th AIRLIFT WING

MARK	DESCRIPTION	DATE
4	ISSUE FOR CONSTRUCTION	29 MAY 2026
3	TYPE B-3 (100%) FINAL DESIGN	26 FEB 2026
2	TYPE B-2 (100%) PRE-FINAL DESIGN	18 JUL 2025
1	TYPE A-2 (35%) SUBMITTAL	10 APR 2024

DESIGNED BY: M. REYNOLDS
DRAWN BY: S. AMIRI
CHECKED BY: A. TURBETT
SUBMITTED BY:
SIZE: ANSI D
ISSUE DATE: 29 MAY 2026
SOLICITATION NO.:
CONTRACT NO.: FA8903-21-D-0013

NATIONAL GUARD BUREAU
1 MAGUIRE WAY
NEWBURGH, NY 12550

TETRA TECH

105TH AIRLIFT WING, AIR NATIONAL GUARD BASE, STEWART INTERNATIONAL AIRPORT, MAGUIRE WAY, NEWBURGH, NY 12550
ENERGY: REPAIR BUILDING 200
FY2026
WHAY142004
DOOR SCHEDULE, DOOR AND WINDOW TYPES – NEW WORK

SHEET ID
A-601

100% SUBMITTAL

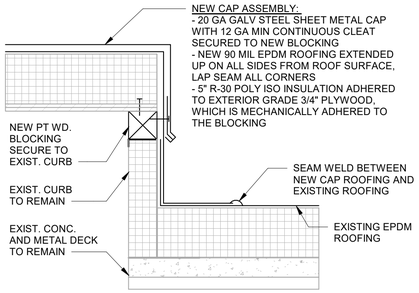

12 A-602 ROOF CURB CAP DETAIL
1 1/2" = 1'-0"

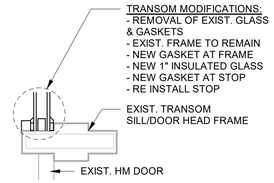

11 A-602 SILL DETAIL S1
1 1/2" = 1'-0"

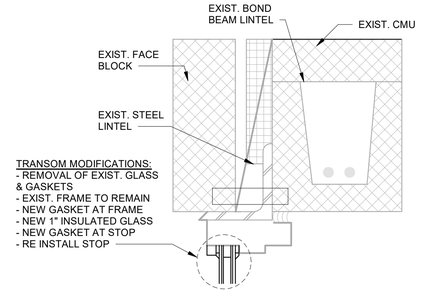

10 A-602 HEAD DETAIL H3
1 1/2" = 1'-0"

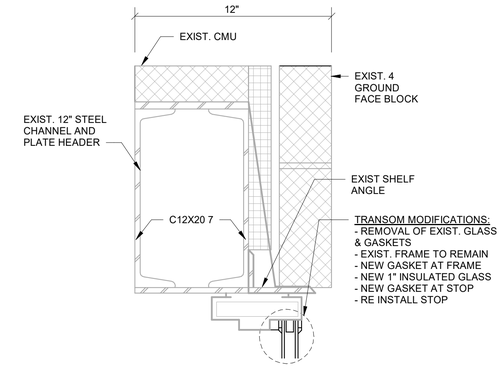

9 A-602 HEAD DETAIL H2
1 1/2" = 1'-0"

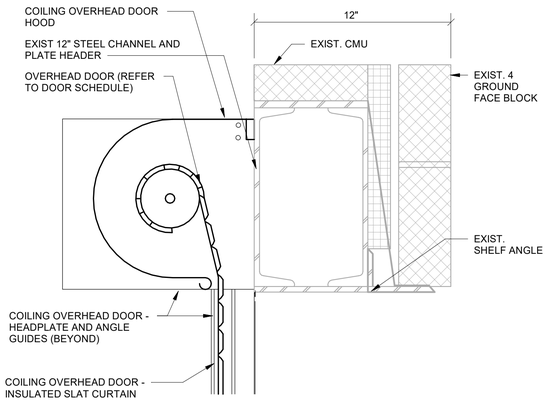

8 A-602 HEAD DETAIL H1
1 1/2" = 1'-0"

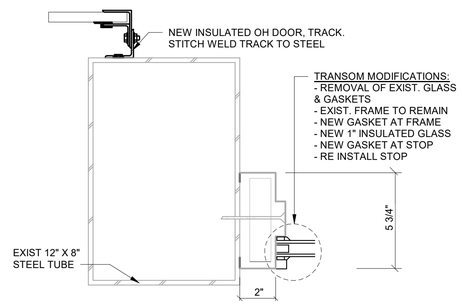

7 A-602 JAMB DETAIL J7
1 1/2" = 1'-0"

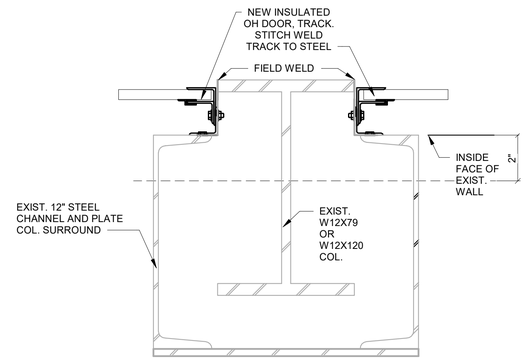

6 A-602 JAMB DETAIL J6
1 1/2" = 1'-0"

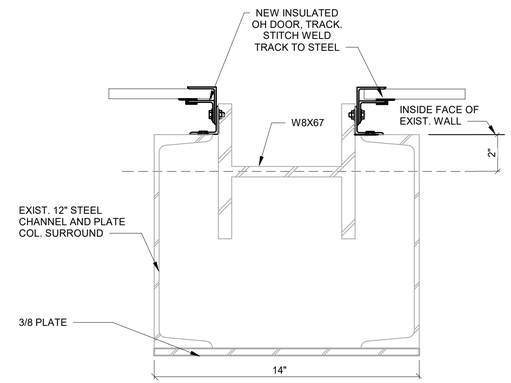

5 A-602 JAMB DETAIL J5
1 1/2" = 1'-0"

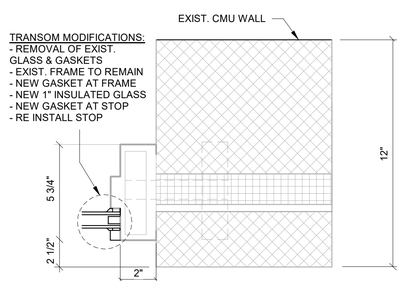

4 A-602 JAMB DETAIL J4
1 1/2" = 1'-0"

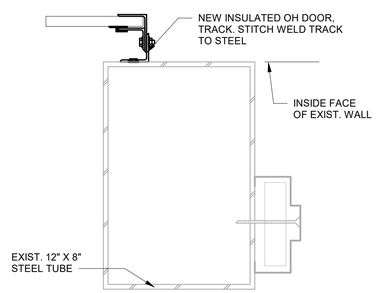

3 A-602 JAMB DETAIL J3
1 1/2" = 1'-0"

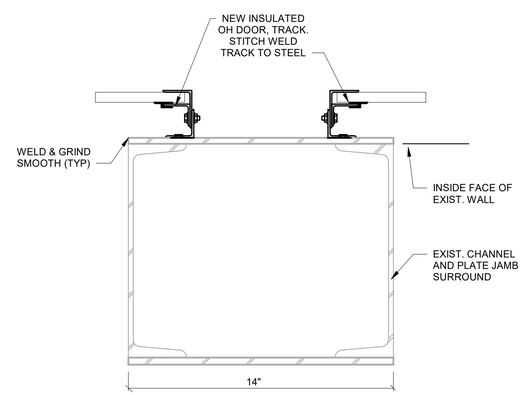

2 A-602 JAMB DETAIL J2
1 1/2" = 1'-0"

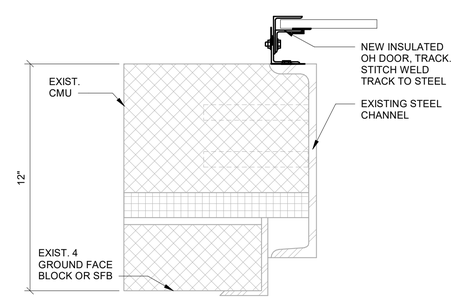

1 A-602 JAMB DETAIL J1
1 1/2" = 1'-0"

0 0.25' 0.5' 1' 1.5'
SCALE: 1 1/2"=1'-0"

MARK	DESCRIPTION	DATE
4	ISSUE FOR CONSTRUCTION	29 MAY 2026
3	TYPE B-3 (100%) FINAL DESIGN	26 FEB 2026
2	TYPE B-2 (100%) PRE-FINAL DESIGN	18 JUL 2025
1	TYPE A-2 (35%) SUBMITTAL	10 APR 2024

ISSUE DATE: 29 MAY 2026
SOLICITATION NO.:
CONTRACT NO.: FA8903-21-D-0013

DESIGNED BY: M. REYNOLDS
DRAWN BY: S. AMIRI
CHECKED BY: A. TURBETT
SUBMITTED BY:
SIZE: ANSI D

NATIONAL GUARD BUREAU
1 MAGUIRE WAY
NEWBURGH, NY 12550

TETRA TECH

105TH AIRLIFT WING, AIR NATIONAL GUARD BASE, STEWART INTERNATIONAL AIRPORT, MAGUIRE WAY, NEWBURGH, NY 12550
ENERGY: REPAIR BUILDING 200
FY2026
WHAY142004
OPENING DETAILS

SHEET ID
A-602

100% SUBMITTAL

Contractor Staging Area

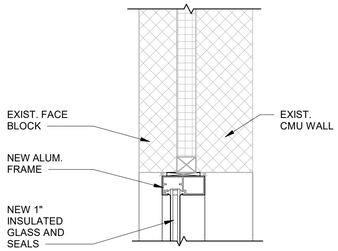

3 A-603 **HEAD DETAIL H4**

1 1/2" = 1'-0"

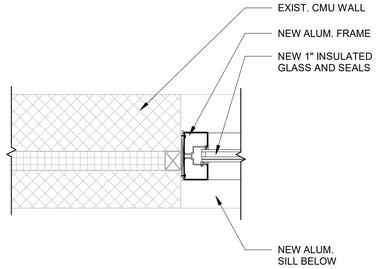

2 A-603 **JAMB DETAIL J8**

1 1/2" = 1'-0"

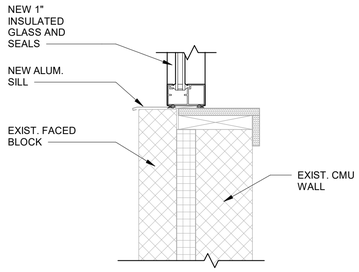

1 A-603 **SILL DETAIL S2**

1 1/2" = 1'-0"

0 0.25' 0.5' 1' 1.5'

SCALE: 1 1/2"=1'-0"

MARK	DESCRIPTION	DATE
5	DETAIL UPDATE	22 JUN 2026
4	ISSUE FOR CONSTRUCTION	29 MAY 2026
3	TYPE B-3 (100%) FINAL DESIGN	26 FEB 2026
2	TYPE B-2 (100%) PRE-FINAL DESIGN	18 JUL 2025
1	TYPE A-2 (35%) SUBMITTAL	10 APR 2024

ISSUE DATE: 29 MAY 2026
SOLICITATION NO.:
CONTRACT NO.: FA8903-21-D-0013

DESIGNED BY: M. REYNOLDS
DRAWN BY: S. AMIRI
CHECKED BY: A. FLUDETT
SUBMITTED BY:
SIZE: ANSI D

NATIONAL GUARD BUREAU
MAGUIRE WAY
NEWBURGH, NY 12550

TETRA TECH

105TH AIRLIFT WING, AIR NATIONAL GUARD BASE, STEWART INTERNATIONAL AIRPORT, MAGUIRE WAY, NEWBURGH, NY 12550
ENERGY: REPAIR BUILDING 200
FY2026
WHAY142004
OPENING DETAILS

SHEET ID

A-603

100% SUBMITTAL