ELECTRICAL SYMBOLS LEGEND

- RECEPTACLE, WALL MOUNTED, SIMPLEX, 20A, 125V, 18" AFF TO CENTER OF DEVICE UON
- RECEPTACLE, WALL MOUNTED, DUPLEX, 20A, 125V, 18" AFF TO CENTER OF DEVICE UON
- RECEPTACLE, WALL MOUNTED, QUADRULEX, 20A, 125V, 18" AFF TO CENTER OF DEVICE UON
- RECEPTACLE, GFCI PROTECTION
- RECEPTACLE, GFCI PROTECTION, WEATHERPROOF WHILE IN USE COVER
- A — RECEPTACLE, AFCI PROTECTION
- RECEPTACLE, 50% SWITCHED
- RECEPTACLE, 100% SWITCHED
- RECEPTACLE, TAMPER-RESISTANT
- 48" — RECEPTACLE, WALL MOUNTED AT 48" HEIGHT TO CENTER OF DEVICE
- RECEPTACLE, CORD REEL WALL MOUNTED, DUPLEX, REEL TO BE 30' IN LENGTH
- RECEPTACLE, SPECIAL PURPOSE, TYPE NOTED ON PLANS
- RECEPTACLE, MOUNTED IN CEILING OR AT STRUCTURE (WHICHEVER IS LOWER), DUPLEX, 20A, 125V
- RECEPTACLE, CORD REEL MOUNTED, DUPLEX, REEL TO BE 30' IN LENGTH
- RECEPTACLE, FLUSH FLOOR MOUNTED, DUPLEX, 20A, 125V
- RECEPTACLE, FLUSH FLOOR MOUNTED, QUADRUPLEX, 20A, 125V
- 4 FB — POWER/DATA/AV FLOOR BOX, FLUSH FLOOR MOUNTED, 4 REPRESENTS QUANTITY OF COMPARTMENTS
- 3 TV — POWER/DATA/TV/AV WALL BOX, FLUSH WALL MOUNTED, 3 REPRESENTS QUANTITY OF COMPARTMENTS
- 30/25/3R/1 L — MOTOR STARTER & DISCONNECT SWITCH, FUSIBLE 30/25/3R/1 INDICATES 30A 25A FUSED, NEMA 3R NEMA MOTOR STARTER TYPE 1
- 3/30/25/3R L — DISCONNECT SWITCH, FUSIBLE 3/30/25 INDICATES 3P 30A 25A FUSE, NEMA 3R
- 3/30/NF/3R L — DISCONNECT SWITCH, NON-FUSIBLE 3/30 INDICATES 3P 30A, NEMA 3R
- 3/30/3R L C — ENCLOSED CIRCUIT BREAKER, 3/30/3R INDICATES 3P 30A TRIP, NEMA 3R
- M $ — MOTOR RATED SWITCH
- CONTROL SWITCH FOR MOTORS
- TRANSFORMER
- PAD MOUNT TRANSFORMER
- S — HIGH VOLTAGE SWITCH
- PANELBOARD. DASHED LINES REPRESENT REQUIRED CLEARANCE.
- METER
- J — JUNCTION BOX
- J — JUNCTION BOX, WALL MOUNTED, RECESSED, 18" AFF TO CENTER OF DEVICE UON
- J — JUNCTION BOX, WALL MOUNTED WITH MODULAR FURNITURE WHIP, 18" AFF TO CENTER OF DEVICE UON
- E — PROVIDE ELECTRICAL CONNECTION TO EQUIPMENT FURNISHED BY OTHERS, SEE MECHANICAL EQUIPMENT CONNECTION SCHEDULE
- G — STATIC GROUNDING POINT GROUND MOUNTED
- GROUND BUS BAR
- GROUND ROD
- GROUND ROD TEST WELL
- UFER GROUND
- BONDING CLAMP
- AIR TERMINAL
- E — E — UNDERGROUND ELECTRICAL PRIMARY CONDUCTOR
- ES — ES — UNDERGROUND ELECTRICAL SECONDARY CONDUCTOR
- G — G — UNDERGROUND GROUND CONDUCTOR
- E — E — OVERHEAD ELECTRICAL PRIMARY CONDUCTOR
- ES — ES — OVERHEAD ELECTRICAL SECONDARY CONDUCTOR
- LP — LP — LIGHTNING PROTECTION CONDUCTOR
- BRANCH CIRCUIT, UNDERGROUND OR CONCEALED BELOW SLAB.
- BRANCH CIRCUIT, HOMERUN, A20 MIN UON
- BRANCH CIRCUIT, CONCEALED ABOVE CEILING OR IN WALL WHERE POSSIBLE, WHERE EXPOSED ROUTE PARALLEL OR PERPENDICULAR TO STRUCTURE.

ABBREVIATIONS

#	NUMBER
'	FEET
"	INCHES
°	DEGREES
Ø	DIAMETER
Φ	PHASE
A	AMPERE
ACP	ACCESS CONTROL PANEL
ACS	ACCESS CONTROL SYSTEM
ADJ	ADJUSTABLE
AFCI	ARC FAULT CIRCUIT INTERUPTER
AFF	ABOVE FINISHED FLOOR
AFG	ABOVE FINISHED GRADE
AL	ALUMINUM
ALT	ALTERNATIVE
AMRS	ADVANCED METER READING SYSTEM
ANN	ANNUNCIATOR
ANSI	AMERICAN NATIONAL STANDARDS INSTITUTE
ATS	AUTOMATIC TRANSFER SWITCH
AUTO	AUTOMATIC
AUX	AUXILLARY
AWG	AMERICAN WIRE GAUGE
BAS	BUILDING AUTOMATION SYSTEM
BC	BELOW COUNTER
BCG	BARE COPPER GROUNDING/BONDING CONDUCTOR
BCT	BONDING CONDUCTOR FOR TELECOMMUNICATIONS
BLDG	BUILDING
BOCT	BOTTOM OF CABLE TRAY
C	CONDUIT
CAT	CATEGORY
CATV	CABLE TELEVISION
CB	CIRCUIT BREAKER
CCT	CORRELATED COLOR TEMPERATURE
cd	CANDELA RATING
CFCI	CONTRACTOR FURNISHED, CONTRACTOR INSTALLED
CFGI	CONTRACTOR FURNISHED, GOVERNMENT INSTALLED
CH	COUNTER HEIGHT
CKT	CIRCUIT
CLG	CEILING
CMU	CONCRETE MASONRY UNIT
COMM	COMMUNICATION
CONN	CONNECTED
COR	CONTRACTING OFFICER
CP	CONTROL PANEL
CRI	COLOR RENDERING INDEX
CTB	COMPUTER TERMINAL BACKBOARD
CTRL	CONTROL/CONTROLLER
CU	COPPER
(D)	DEMOLISH
DACT	DIGITAL ALARM COMMUNICATOR TRANSMITTER
dBA	DECIBEL LEVEL
DDC	DIRECT DIGITAL CONTROL
DMU	DIGITAL METERING UNIT
DP	DISTRIBUTION PANELBOARD
DS	DISCONNECT
DWG	DRAWING
(E)	EXISTING DEVICE
EC	ELECTRICAL CONTRACTOR
ECU	ENERGY CONTROL UNIT
EF	ENTRANCE FACILITY
EGB	ELECTRIC GROUND BAR
EIA	ELECTRONIC INDUSTRIES ALLIANCE
ELCU	EMERGENCY LIGHTING CONTROL UNIT
ELEC	ELECTRICAL
ELEV	ELEVATOR
EM	EMERGENCY
EMT	ELECTRICAL METALLIC TUBING
ENT	ELECTRICAL NONMETALLIC TUBING
EPA	ENVIRONMENTAL PROTECTION AGENCY
ESS	ELECTRONIC SECURITY SYSTEM
EST	ESTIMATED
EWC	ELECTRIC WATER COOLER
EWH	ELECTRIC WATER HEATER
EX	EXISTING DEVICE
EXT	EXTERIOR
F	FAHRENHEIT
FA	FIRE ALARM
FAAP	FIRE ALARM ANNUNCIATION PANEL
FACP	FIRE ALARM CONTROL PANEL
FDU	FIBER DISTRIBUTION UNIT
FL	FLOOR
FLA	FULL LOAD AMPERES
FLR	FLOOR
FMC	FLEXIBLE METALLIC CONDUIT
FMCP	FIRE ALARM & MASS NOTIFICATION CONTROL PANEL
FO	FIBER OPTIC
FOPP	FIBER OPTIC PATCH PANEL
FOV	FIELD OF VIEW
FP	FIRE PUMP
FPC	FIRE PUMP CONTROLLER
FT	FEET
FTU	FAN TERMINAL UNIT
GC	GENERAL CONTRACTOR
GE	GROUNDING EQUALIZER
GEN	GENERATOR
GFCI	GROUND FAULT CIRCUIT INTERRUPTER / GOVERNMENT FURNISHED, CONTRACTOR INSTALLED
GFGI	GOVERNMENT FURNISHED, GOVERNMENT INSTALLED
GFP	GROUND FAULT PROTECTION
GND	GROUND
HC	HEATING, VENTILATION, AND AIR CONDITIONING CONTRACTOR
HH	HANDHOLE
HP	HORSEPOWER

ABBREVIATIONS

HT	HEIGHT
HVAC	HEATING, VENTILATION, AND AIR CONDITIONING
HZ	HERTZ
I/O	INPUT/OUTPUT
IAW	IN ACCORDANCE WITH
ID	IDENTIFICATION, INSIDE DIAMETER
IDP	INTRUSION DETECTION PANEL
IDS	INTRUSION DETECTION SYSTEM
IEEE	INSTITUTE OF ELECTRICAL AND ELECTRONIC ENGINEERS
IG	ISOLATED GROUND
IMC	INTERMEDIATE METALLIC CONDUIT
IR	IMPACT RESISTANT
ISP	INSIDE PLANT
IT	INFORMATION TECHNOLOGY
ITN	INFORMATION TRANSFER NODE
JACE	JAVA APPLICATION CONTROL ENGINE
JB/JBOX	JUNCTION BOX
JP	JOCKEY PUMP
JPC	JOCKEY PUMP CONTROLLER
K	KELVIN
KAIC	KILOAMP INTERRUPTING CAPACITY
KCMIL	THOUSAND CIRCULAR MILS
KV	KILOVOLT
KVA	KILOVOLT-AMPERE
KW	KILOWATT
KWH	KILOWATT-HOUR
LB	POUND
LC	LUCENT CONNECTOR
LCU	LIGHTING CONTROL UNIT
LFMC	LIQUIDTIGHT FLEXIBLE METAL CONDUIT
LFNC	LIQUIDTIGHT FLEXIBLE NON-METALLIC CONDUIT
LI	LONG TIME AND INSTANTANEOUS
LIU	LIGHT INTERFACE UNIT
LLF	LIGHT LOSS FACTOR
LM	LUMEN
LMC	LIQUIDTIGHT METAL CONDUIT
LPS	LIGHTNING PROTECTION SYSTEM
LPW	LUMEN PER WATT
LSI	LONG TIME, SHORT TIME, AND INSTANTANEOUS
LSIG	LONG TIME, SHORT TIME, INSTANTANEOUS, AND GROUND FAULT
LTG	LIGHTING
m	METERS
MAX	MAXIMUM
MC	MECHANICAL CONTRACTOR/METAL-CLAD
MCB	MAIN CIRCUIT BREAKER
MCC	MOTOR CONTROL CENTER
MCP	MAIN CONTROL PANEL
MECH	MECHANICAL
MEZZ	MEZZANINE
MGB	MAIN GROUND BAR
MIN	MINIMUM
MLO	MAIN LUGS ONLY
MM	MULTI-MODE
mm	MILLIMETERS
MNS	MASS NOTIFICATION SYSTEM
MOD	MOTOR OPERATED DAMPER
MOV	METAL-OXIDE-VARISTOR
MPZ	MINI POWER ZONE
MTS	MANUAL TRANSFER SWITCH
MV	MEDIUM VOLTAGE
N	NEUTRAL
N/A, NA	NOT APPLICABLE
NAC	NOTIFICATION APPLIANCE CIRCUIT
NC	NORMALLY CLOSED
NEC	NATIONAL ELECTRICAL CODE
NEMA	NATIONAL ELECTRICAL MANUFACTURERS ASSOCIATION
NF	NON-FUSED
NFPA	NATIONAL FIRE PROTECTION ASSOCIATION
NO	NORMALLY OPEN
NTS	NOT TO SCALE
OC	ON CENTER
OD	OUTSIDE DIAMETER
OE	OVERHEAD ELECTRICAL
OFCI	OWNER FURNISHED, CONTRACTOR INSTALLED
OFOI	OWNER FURNISHED, OWNER INSTALLED
OH	OVERHEAD
OHD	OVERHEAD DOOR
OSHA	OCCUPATIONAL SAFETY AND HEALTH ADMINISTRATION
OSP	OUTSIDE PLANT
OT	OVERHEAD TELECOMMUNICATIONS
P	POLE(S)
PA	PUBLIC ADDRESS
PAS	PUBLIC ADDRESS SYSTEM
PB	PULL BOX
PBB	PRIMARY BONDING BUSBAR
PC	PLUMBING CONTRACTOR/PERSONAL COMPUTER
PCB	POLYCHLORINATED BIPHENYLS
PCU	PREMISES CONTROL UNIT
PDS	PROTECTED DISTRIBUTION SYSTEM
PDU	POWER DISTRIBUTION UNIT
PF	POWER FACTOR
PH	PHASE
PLC	PROGRAMMABLE LOGIC CONTROLLER
PNL	PANEL
POE	POWER OVER ETHERNET
POTS	PLAIN OLD TELEPHONE SYSTEM
PP	PATCH PANEL
PRI	PRIMARY
PS	POWER SUPPLY
PV	PHOTOVOLTAIC

ABBREVIATIONS

PVC	POLYVINYL-CHLORIDE
(R)	RELOCATE
RBB	RACK BONDING BUSBAR
RCP	REFLECTED CEILING PLAN
RE	RELOCATED/REQUEST TO EXIT
REC	RECEPTACLE
REQ	REQUIRED
REV	REVISION
RF	RADIO-FREQUENCY
RGS	RIGID STEEL CONDUIT
RM	ROOM
RMC	RIGID METALLIC CONDUIT
RNC	RIGID NON-METALLIC CONDUIT
RO	REVERSE OSMOSIS
RPS	REMOTE POWER SUPPLY
RSC	RIGID GALVANIZED STEEL CONDUIT
RSFACU	RELEASING SERVICE FIRE ALARM CONTROL UNIT
RT	REMOTE TRANSMITTER
RU	RACK UNIT
RX	REQUEST TO EXIT
SBB	SECONDARY BONDING BUSBAR
SC	SHORT-CIRCUIT/SQUARE CONNECTOR
SCCR	SHORT-CIRCUIT CURRENT RATING
SE	SERVICE ENTRANCE
SEC	SECONDARY
SECT	SECTION
SER	SERVICE ENTRANCE RATED
SF	SQUARE FEET
SM	SINGLE MODE
SN	SOLID NEUTRAL
SPD	SURGE PROTECTION DEVICE
SPEC	SPECIFICATION(S)
ST	STRAIGHT TIP
STP	SHIELDED TWISTED PAIR
SWBD	SWITCHBOARD
SWGR	SWITCHGEAR
TBB	TELECOMMUNICATIONS BONDING BACKBONE
TE	TELECOMMUNICATIONS ENCLOSURE
TEBC	TELECOMMUNICATIONS EQUIPMENT BONDING CONDUCTOR
TELE	TELEPHONE
TER	TELECOMMUNICATIONS EQUIPMENT ROOM
TIA	TELECOMMUNICATIONS INDUSTRY ASSOCIATION
TOCT	TOP OF CABLE TRAY
TR	TELECOMMUNICATIONS ROOM
TTB	TELEPHONE TERMINAL BACKBOARD
TVSS	TRANSIENT VOLTAGE SURGE SUPPRESSION
TX	TRANSMIT
TYP	TYPICAL
UFCI	UTILITY FUNDED CONTRACTOR INSTALLED
UFUI	UTILITY FUNDED UTILITY INSTALLED
UG	UNDERGROUND
UH	UNIT HEATER
UL	UNDERWRITERS LABORATORIES
UMCS	UTILITY MANAGEMENT CONTROL SYSTEM
UON	UNLESS OTHERWISE NOTED
UPC	ULTRA-PHYSICAL CONTACT
UPS	UNINTERRUPTIBLE POWER SUPPLY
UTP	UNSHIELDED TWISTED PAIR
V	VOLTAGE
VA	VOLT AMPERE
VFD	VARIABLE FREQUENCY DRIVE
VSD	VARIABLE SPEED DRIVE
W	WATT
W/	WITH
WAP	WIRELESS ACCESS POINT
WID	WIRELESS INTRUSION DEVICE
WKST	WORKSTATION
WP	WEATHERPROOF
XFMR	TRANSFORMER

SHEET NOTES

1. ALL WORK SHALL BE PERFORMED BY CERTIFIED ELECTRICIANS OR UNDER THE SUPERVISION OF A CERTIFIED ELECTRICIAN. ELECTRICIAN SHALL BE LICENSED IN ACCORDANCE WITH LOCAL, STATE, AND FEDERAL GOVERNING AUTHORITIES.
2. REFER TO THE APPROPRIATE DRAWING FOR THE EXACT LOCATION OF EQUIPMENT INSTALLED UNDER DIVISIONS OF THE DOCUMENTS WHICH REQUIRE ELECTRICAL SERVICE.
3. FIELD ADJUST LIGHT FIXTURES UP TO 3' MAX TO CLEAR ANY BEAMS, COLUMNS, MECHANICAL EQUIPMENT, PIPING, ETC.
4. VERIFY DOOR SWINGS WITH ARCHITECTURAL PLANS AND MANUFACTURER SHOP DRAWINGSLOCATE LIGHT SWITCHES ON JAMB SIDE OF DOOR, WHERE POSSIBLE.
5. FIXTURE FINISHES SHALL BE COORDINATED WITH CONTRACTING OFFICER.
6. RECESSED ELECTRICAL BOXES SHALL BE OFFSET 2'-0" MINIMUM IN FIRE RATED WALLS. COORDINATE WITH CONTRACTING OFFICER FOR LOCATION AND TYPES OF FIRE RATED WALLS.
7. PENETRATIONS THROUGH FIRE RATED WALLS SHALL BE FIRE STOPPED BY A UL APPROVED FIRE STOP SYSTEM.
8. ELECTRICAL WORK SHALL CONFORM WITH ALL LOCALLY, STATE, AND FEDERALLY ADOPTED CODES, REGULATIONS, AND STANDARDS.
9. MECHANICAL EQUIPMENT IS INDICATED ON POWER PLANS FOR LOCATION REFERENCE ONLY. REFER TO MECHANICAL EQUIPMENT SCHEDULE FOR SPECIFIC WIRING, DISCONNECT, AND CONTROLS REQUIREMENTS.
10. PROVIDE FINAL ELECTRICAL CONNECTION TO MECHANICAL EQUIPMENT USING FLEXIBLE METALLIC CONDUIT.
11. THE CONTRACTOR SHALL BECOME FAMILIAR WITH ALL OTHER DISCIPLINE DRAWINGS AND SPECIFICATIONS DRAWINGS PRIOR TO THE INSTALLATION OF THE ELECTRICAL SYSTEMS.
12. PROVIDE GFCI PROTECTED RECEPTACLES AT THE FOLLOWING LOCATIONS:
    A. BUILDING EXTERIOR.
    B. WITHIN 6' OF A SINK AND WATER FOUNTAINS.
    C. SERVING VENDING MACHINES
    D. LATRINES, SHOWER ROOMS, LOCKER ROOMS, KITCHENS, MECHANICAL ROOMS, FIRE PUMP ROOMS, ELECTRICAL ROOMS, AND GARAGES.
13. RECEPTACLE AND SWITCH BOXES SHALL BE ROUGHED IN FLUSH WITH WALL SURFACE, UON.
14. PROVIDE SUPPORTS AS REQUIRED FOR ALL ELECTRICAL SYSTEMS. MOUNT ALL OVERHEAD UTILITIES AND OTHER FIXTURES WEIGHING 31LBS OR MORE USING EITHER RIGID OR FLEXIBLE SYSTEMS.
15. COORDINATE EXACT MOUNTING LOCATION OF SERVICE RECEPTACLES, DISCONNECTS, AND STARTERS FOR MECHANICAL AND OWNER FURNISHED EQUIPMENT IN FIELD WITH EQUIPMENT INSTALLER BEFORE ROUGH-IN. INSTALL AS INDICATED ON THE EQUIPMENT CONNECTION SCHEDULE, WHETHER OR NOT EXPLICITLY SHOWN ON FLOOR PLANS. DO NOT INSTALL DEVICES WHERE LOCATION IMPEDES REQUIRED EQUIPMENT CLEARANCES AND SERVICE ACCESS POINTS.
16. EXIT SIGNS SHALL BE CIRCUITED AHEAD OF ANY LIGHTING CONTROLS.
17. EMERGENCY LIGHTING FIXTURES WITH BATTERY BACK-UP UNITS SHALL BE PROVIDED WITH AN UNSWITCHED CONDUCTOR.
18. PROVIDE JUNCTION BOXES AS INDICATED ON PLANS AND WHERE REQUIRED..
19. DISCONNECT SWITCHES FOR MECHANICAL EQUIPMENT SHALL BE MOUNTED TO THE STRUCTURE, NOT TO THE EQUIPMENT.
20. LABEL RECEPTACLES AND LINES VOLTAGE SWITCHES WITH PANEL NAME AND CIRCUIT NUMBER(S).
21. CONDUITS LEAVING OR ENTERING BUILDING SHALL BE SEALED TO PREVENT ENTRANCE OF MOISTURE.
22. PROVIDE ARC FLASH HAZARD WARNING LABELS ON ELECTRICAL EQUIPMENT. LABELS SHALL BE LOCATED SO AS TO BE CLEARLY VISIBLE TO QUALIFIED PERSONS BEFORE EXAMINATION, ADJUSTMENT, SERVICING, OR MAINTENANCE OF EQUIPMENT. LABEL TEMPLATES MAY BE OBTAINED FROM WBDG UFC 3-560-01.
23. BRANCH CONDUITS SHALL BE RUN HIGH AND TIGHT TOGETHER WHEN FEASIBLE, UON.
24. ELECTRICAL LEGEND IS GENERIC AND NOT ALL ITEMS MAY BE USED.
25. SPECIAL CARE SHALL BE TAKEN TO AVOID DAMAGING EXISTING UTILITIES (WATER, SEWER, POWER, GAS, COMMUNICATIONS, ETC.) DURING DEMOLITION AND CONSTRUCTION. CONTRACTOR SHALL BE RESPONSIBLE FOR IDENTIFYING AND LOCATING ALL EXISTING SITE UTILITIES (OVERHEAD & UNDERGROUND) IN THE AREA OF EXCAVATION AND/OR DRILLING. CONTRACTOR MUST CONTACT MISS DIG SYSTEM, INC. BY PHONE AT 811 OR VIA THE WEB A MINIMUM OF 3 BUSINESS DAY PRIOR TO EXCAVATING AND/OR DRILLING, EXCLUDING WEEKENDS AND HOLIDAYS. NO ADDITIONAL COMPENSATION SHALL BE GIVEN FOR REPAIRS REQUIRED FOR ANY INCURRED DAMAGES, WHICH MIGHT BE CAUSED BY THE CONTRACTOR'S FAILURE TO EXACTLY LOCATE AND PRESERVE ANY AND ALL UNDERGROUND UTILITIES. SUCH DAMAGES (IF HAPPENED) SHALL BE REPAIRED IMMEDIATELY TO RESUME SERVICES WITH MINIMAL OUTAGES AND AT NO ADDITIONAL COST TO THE GOVERNMENT.
26. WHERE POWER CABLES ARE NOT ROUTED IN CABLE TRAY, REFER TO CABLE SCHEDULE FOR CONDUIT SIZE. CABLES IN CABLE TRAY DO NOT NEED TO BE ROUTED IN CONDUIT.
27. PROVIDE FIRE ALARM INTERFACE FOR EMERGENCY LIGHTING AS INDICATED.
28. PROVIDE ALL FIRE ALARM AND FIRE PROTECTION SYSTEMS WITH CIRCUIT BREAKERS LOCKABLE IN THE "ON" POSITION AND RED IN COLOR.
29. EXTERIOR DEVICES AND EQUIPMENT SHALL BE NEMA 3R RATED, UON.
30. CONTRACTOR SHALL BE RESPONSIBLE FOR PROVIDING WIRING, CABLING, CONDUIT, AND ANY ANCILLARY EQUIPMENT INCLUDING PROGRAMMING OF LIGHTING CONTROL SYSTEM. THE INSTALLATION SHALL BE TESTED BY AN REPRESENTATIVE OF THE LIGHTING CONTROL SYSTEM MANUFACTURER AFTER INSTALLATION. THE REPRESENTATIVE SHALL CERTIFY THAT THE LIGHTING CONTROL SYSTEM IS INSTALLED AND TESTED TO THEIR FULL SATISFACTION.
31. LEADS BETWEEN SPD AND ASSOCIATED BREAKER SHALL NOT EXCEED 36". SPD MUST BE LOCATED IN A SEPERATE ENCLOSURE FROM THEIR ASSOCIATED PANELS.

DEMOLITION SHEET NOTES

1. DEMOLITION DRAWINGS INDICATE GENERAL DEMOLITION SCOPE AND INTENT OF DEMOLITION WORK REQUIRED. DEMOLITION DRAWINGS DO NOT PROVIDE EXACT QUANTITIES AND SPECIFIC TYPES OF MATERIALS AND EQUIPMENT TO BE REMOVED.
2. EXISTING CONDUITS REMAINING IN PLACE MAY BE REUSED, PROVIDED CONDUIT IS IN SATISFACTORY CONDITION, AS DETERMINED BY OWNER, AND IS RUN IN DIRECT MANNER BETWEEN INTENDED SOURCE AND LOAD. THOROUGHLY CLEAN EXISTING CONDUITS BEFORE INSTALLATION OF WIRE.
3. DO NOT REUSE REMOVED CONDUIT, CABLE, AND WIRE.
4. IN AREAS OF WORK (INCLUDING AREAS WHERE CEILING WILL BE REMOVED), REMOVE EXISTING EXPOSED UNUSED SYSTEMS CABLES IN THEIR ENTIRETY IAW THE NEC. VERIFY WITH OWNER THAT CABLES ARE UNUSED AND OBTAIN OWNER'S WRITTEN APPROVAL PRIOR TO REMOVAL.
5. DEVICES AND EQUIPMENT NOT EXPLICITLY NOTED AS DEMOLISHED ARE TO REMAIN POWERED, UON. ELECTRICAL DEVICES AND CIRCUITRY INTERFERING WITH DEMOLITION WORK SHALL BE DISCONNECTION AND REMOVED, UON. EXISTING CIRCUIT WIRING SHALL BE REMOVED BACK TO SOURCE AND PANEL DIRECTORIES MODIFIED ACCORDINGLY.
6. ELECTRICAL DEMOLITION WORK SHALL BE PROPERLY COORDINATED WITH OTHER TRADES.
7. CONTRACTOR IS SOLELY RESPONSIBLE FOR THE SAFE HANDLING AND DISPOSAL OF ALL REMOVED LIGHT FIXTURES AND BALLASTS THAT MAY CONTAIN PCBs OR MERCURY, IAW ALL APPLICABLE EPA, OSHA, FEDERAL, STATE, AND LOCAL CODES AND LAW.
8. REVIEW EQUIPMENT SCHEDULED TO BE REMOVED WITH OWNER, DELIVER TO OWNER'S STORAGE FACILITY ALL EQUIPMENT REQUESTED, BY OWNER, ALL OTHER EQUIPMENT TO BE DISPOSED OF PROPERLY.

DEMOLITION SHEET NOTES

9. DISCONNECT AND REMOVE EXISTING RECEPTACLE, RECEPTACLE CONTROL DEVICES, RACEWAYS, CABLES, WIRES, AND ASSOCIATED COMPONENTS CIRCUITRY TO SOURCE UON. MODIFY/EXTEND CIRCUITRY TO MAINTAIN OPERATION OF REMAINING DEVICES ON THE SAME CIRCUIT. UPDATE MARKS/LABELS/TAGS ON CIRCUITRY TO INDICATE TYPE OF CIRCUIT (NORMAL/EMERGENCY/ETC.) AND THE AREA OR ITEMS SERVED.
10. DISCONNECT AND REMOVE EXISTING LIGHTING, LIGHTING CONTROL DEVICES, RACEWAYS, CABLES, WIRES, AND ASSOCIATED COMPONENTS INDICATED TO SOURCE, UON. MODIFY/EXTEND CIRCUITRY TO MAINTAIN OPERATION OF REMAINING DEVICES ON THE SAME CIRCUIT. UPDATE MARKS/LABELS/TAGS ON CIRCUITRY TO INDICATE TYPE OF CIRCUIT (NORMAL/EMERGENCY/ETC.) AND THE AREA OR ITEMS SERVED.
11. UPON COMPLETION OF SCHEDULED WORK, TRACE AND IDENTIFY NEW AND EXISTING LOADS SERVED BY EACH CIRCUIT FROM PANELS AND BALANCE LOADS AMONG PHASE (RE-CIRCUITING) WHEN NEEDED. PROVIDE NEW ACCURATE TYPE-WRITTEN PANEL DIRECTORIES IDENTIFYING LOADS. SWITCH OFF UNUSED BREAKERS AND LABEL AS "SPARE".
12. WHERE EXISTING CEILINGS ARE TO BE DEMOLISHED, THE CONTRACTOR IS TO PROVIDE SUPPORT FOR EXISTING TO REMAIN RACEWAYS AND CIRCUITRY SUPPORTED BY CEILING GRID OR CEILING SUPPORT CABLES. MODIFY/EXTEND RACEWAYS AND CIRCUITRY AS NECESSARY TO MAINTAIN REQUIRED SUPPORT.
13. WHERE WALL DEVICES ARE SHOWN AS DEMOLISHED IN WALLS THAT ARE EXISTING TO REMAIN, PATCH TO MATCH ADJACET FINISHES. WHERE WIRING FOR OTHER DEVICES PASS THROUGH THE WALL BOX OR THE BOX IS OTHERWISE STILL UTILIZED, PROVIDE COVER PLATE.

105th AIRLIFT WING

MARK	DESCRIPTION	DATE
4	ISSUE FOR CONSTRUCTION	29 MAY 2026
3	TYPE B-3 (100%) FINAL DESIGN	26 FEB 2026
2	TYPE B-2 (100%) PRE-FINAL DESIGN	18 JUL 2025
1	TYPE A-2 (35%) SUBMITTAL	10 APR 2024

ISSUE DATE: 29 MAY 2026
SOLICITATION NO.:
CONTRACT NO.: FA8903-21-D-0013

DESIGNED BY: J. HARLAN
DRAWN BY: R. BARNARD
CHECKED BY: J. HOOVER
SUBMITTED BY: S. FORD
SIZE: ANSI D

NATIONAL GUARD BUREAU
1 MAGUIRE WAY
NEWBURGH, NY 12550

TETRA TECH

105TH AIRLIFT WING, AIR NATIONAL GUARD BASE, STEWART INTERNATIONAL AIRPORT, 1 MAGUIRE WAY, NEWBURGH, NY 12550
ENERGY: REPAIR BUILDING 200
FY2026
WHAY 142004

LEGEND,ABBREVIATIONS, AND NOTES

SHEET ID
E-001

100% SUBMITTAL

KEYNOTES

1. REMOVE AND REINSTALL EXISTING CONDUCTORS TO NEW COILING DOOR MOTOR.
   NOTE: DOORS 127A, 127B, 127C AND 127D ARE NIC.

SHEET NOTES

1. REFER TO SHEET E-001 FOR GENERAL NOTES, ABBREVIATIONS, AND SYMBOL LEGENDS.
2. SEE EQUIPMENT CONNECTION SCHEDULE FOR CIRCUITS TO EQUIPMENT SPECIFIED BY OTHER DISCIPLINES.
3. REFER TO MECHANICAL SHEETS FOR ALL CONTROL AND NETWORK CABLING ASSOCIATED WITH HVAC AND BUILDING AUTOMATION SYSTEM. ELECTRICAL CONTRACTOR SHALL BE RESPONSIBLE FOR INSTALLATION OF CABLING.
4. EXTERIOR DEVICES SHALL BE NEMA 3R RATED, MINIMUM.

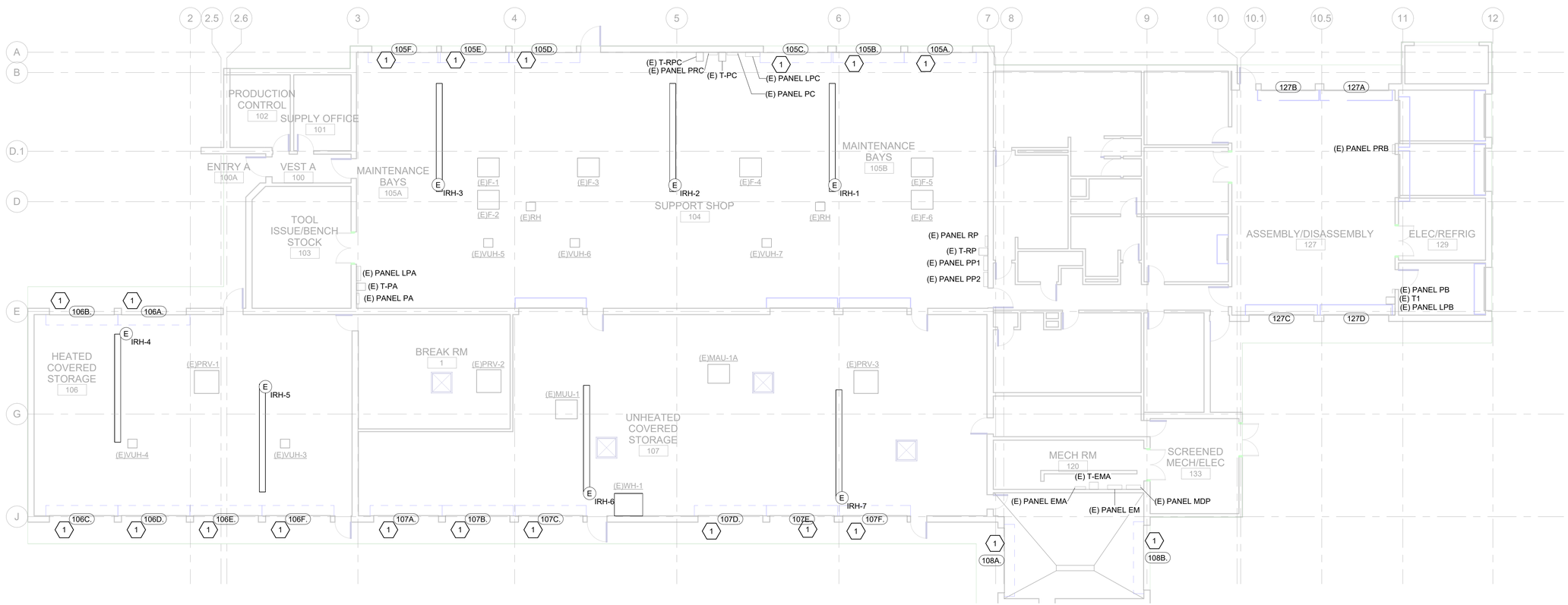

A1 ELECTRICAL POWER PLAN

SCALE: 3/32" = 1'-0"

PLAN NORTH

0 10 21 32

SCALE: 3/32"=1'-0"

105th AIRLIFT WING

MARK	DESCRIPTION	DATE
4	ISSUE FOR CONSTRUCTION	29 MAY 2026
3	TYPE B-3 (100%) FINAL DESIGN	26 FEB 2026
2	TYPE B-2 (100%) PRE-FINAL DESIGN	18 JUL 2025
1	TYPE A-2 (35%) SUBMITTAL	10 APR 2024

ISSUE DATE: 29 MAY 2026
SOLICITATION NO.:
CONTRACT NO.: FA8903-21-D-0013

DESIGNED BY: J. HARLAN
DRAWN BY: R. BARNARD
CHECKED BY: J. HOOVER
SUBMITTED BY: R. FORD
SIZE: ANSI D

NATIONAL GUARD BUREAU
1 MAGUIRE WAY
NEWBURGH, NY 12550

TETRA TECH

105TH AIRLIFT WING, AIR NATIONAL GUARD BASE, STEWART INTERNATIONAL AIRPORT, MAGUIRE WAY, NEWBURGH, NY 12550
ENERGY: REPAIR BUILDING 200
FY2026
WHAY 142004

ELECTRICAL POWER PLAN

SHEET ID

E-101

100% SUBMITTAL

SHEET NOTES

1. SEE SHEET E-001 FOR GENERAL ELECTRICAL NOTES, ABBREVIATIONS, AND SYMBOL LEGEND.
2. NOT ALL CIRCUITS ARE SHOWN ON THIS SHEET. REFER TO INDIVIDUAL PANEL SCHEDULES FOR ADDITIONAL INFORMATION.

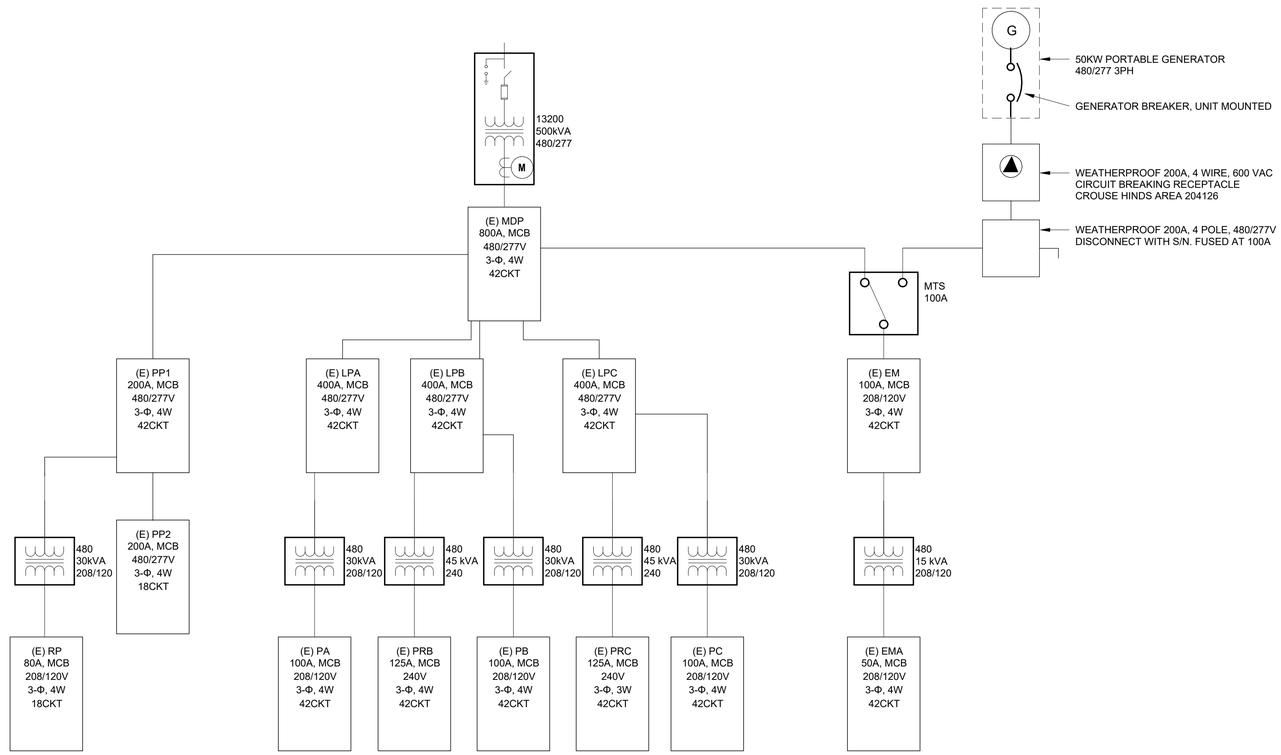

B4 EXISTING ONE-LINE DIAGRAM

SCALE: 12" = 1'-0"

MARK	DESCRIPTION	DATE
4	ISSUE FOR CONSTRUCTION	29 MAY 2026
3	TYPE B-3 (100%) FINAL DESIGN	26 FEB 2026
2	TYPE B-2 (100%) PRE-FINAL DESIGN	18 JUL 2025
1	TYPE A-2 (35%) SUBMITTAL	10 APR 2024

ISSUE DATE: 29 MAY 2026
SOLICITATION NO.:
CONTRACT NO.: FA8903-21-D-0013

DESIGNED BY: J. HARLAN
DRAWN BY: R. BARNARD
CHECKED BY: J. HOOVER
SUBMITTED BY: S. FORD
SIZE: ANSI D

NATIONAL GUARD BUREAU
1 MAGUIRE WAY
NEWBURGH, NY 12550

TETRA TECH

105TH AIRLIFT WING, AIR NATIONAL GUARD BASE, STEWART INTERNATIONAL AIRPORT, MAGUIRE WAY, NEWBURGH, NY 12550
ENERGY: REPAIR BUILDING 200
FY2026
WHAY 142004

ELECTRICAL ONE-LINE DIAGRAM

SHEET ID

E-601

100% SUBMITTAL

EQUIPMENT CONNECTIONS SCHEDULE

NAME	PANEL	CKT #	LOAD DESCRIPTION	EQUIPMENT CIRCUIT INFORMATION							FEEDER	DISCONNECT INFORMATION					NAME	NOTES
				V	POLES	Φ	HP	W	MCA	MOCP		FURNISHED BY	INSTALLED BY	TYPE	SWITCH RATING	NEMA TYPE		
MECHANICAL																		
IRH-1	(E) PANEL RP	3		120	1	1	-	120	1	20	A30	EC	EC	SWITCH	20 A	1	IRH-1	
IRH-2	(E) PANEL RP	3		120	1	1	-	120	1	20	A30	EC	EC	SWITCH	20 A	1	IRH-2	
IRH-3	(E) PANEL RP	3		120	1	1	-	120	1	20	A30	EC	EC	SWITCH	20 A	1	IRH-3	
IRH-4	(E) PANEL RP	7		120	1	1	-	120	1	20	A30	EC	EC	SWITCH	20 A	1	IRH-4	
IRH-5	(E) PANEL RP	7		120	1	1	-	120	1	20	A30	EC	EC	SWITCH	20 A	1	IRH-5	
IRH-6	(E) PANEL RP	5		120	1	1	-	120	1	20	A30	EC	EC	SWITCH	20 A	1	IRH-6	
IRH-7	(E) PANEL RP	5		120	1	1	-	120	1	20	A30	EC	EC	SWITCH	20 A	1	IRH-7	
MECHANICAL: 7																		

CABLE SCHEDULE (CU)

LABEL	CB RATING	# OF SETS	CURRENT CARRYING CONDUCTORS		NEUTRAL CONDUCTORS		GROUNDING CONDUCTORS		CONDUIT
			#	SIZE	#	SIZE	#	SIZE	
A									
A20	20 A	1	2	#12	0	N/A	1	#12	3/4"
A30	30 A	1	2	#10	0	N/A	1	#10	3/4"
A40	40 A	1	2	#8	0	N/A	1	#10	3/4"
A50	50 A	1	2	#6	0	N/A	1	#10	1"
A60	60 A	1	2	#4	0	N/A	1	#10	1"
A70	70 A	1	2	#4	0	N/A	1	#8	1"
A80	80 A	1	2	#3	0	N/A	1	#8	1-1/2"
A90	90 A	1	2	#2	0	N/A	1	#8	1-1/2"
A100	100 A	1	2	#1	0	N/A	1	#8	1-1/2"
A110	110 A	1	2	#1	0	N/A	1	#6	1-1/2"
A125	125 A	1	2	#1	0	N/A	1	#6	1-1/2"
A150	150 A	1	2	#1/0	0	N/A	1	#6	1-1/2"
A175	175 A	1	2	#2/0	0	N/A	1	#6	1-1/2"
A200	200 A	1	2	#3/0	0	N/A	1	#6	2"
A225	225 A	1	2	#4/0	0	N/A	1	#4	2"
A250	250 A	1	2	250KCMIL	0	N/A	1	#4	2"
A300	300 A	1	2	350KCMIL	0	N/A	1	#4	2-1/2"
A350	350 A	1	2	500KCMIL	0	N/A	1	#4	3"
A400	400 A	2	2	#3/0	0	N/A	1	#3	2"
A450	450 A	2	2	#4/0	0	N/A	1	#2	2"

Branch Panel: (E) PANEL MDP

LOCATION: MECH RM 120
SUPPLY FROM:
MOUNTING: Surface
VOLTS: 480Y/277V
PHASES: 3
WIRES: 4
A.I.C. RATING: 50000
MAINS TYPE: MCB
BUS RATING: 800 A

CKT	CIRCUIT DESCRIPTION	TRIP	POLES	A		B		C		POLES	TRIP	CIRCUIT DESCRIPTION	CKT
1	DEAD RELAY PANEL NORTH WALL (E)	100 A	3	0	0					3	100 A	DEAD RELAY PANEL SOUTH MAINT BAYS "10...	2
3	--	--	--			0	0			--	--	--	4
5	--	--	--					0	0	--	--	--	6
7	TRANSFER SWITCH (E)	100 A	3	0	0					3	100 A	DEAD RELAY PANEL MARINE AREA HIGH BA...	8
9	--	--	--			0	0			--	--	--	10
11	--	--	--					0	0	--	--	--	12
13	DEAD RELAY PANEL MAINT BAYS 105 (E)	200 A	3	0	0					3	70 A	OFF - SPARE CAPPED OFF	14
15	--	--	--			0	0			--	--	--	16
17	--	--	--					0	0	--	--	--	18
19	OFF - SPARE	400 A	3	0	21					3	400 A	PANEL LPA (E)	20
21	--	--	--			0	21			--	--	--	22
23	--	--	--					0	21	--	--	--	24
25	OFF - SPARE	400 A	3	0	27					3	400 A	PANEL LPB (E)	26
27	--	--	--			0	27			--	--	--	28
29	--	--	--					0	27	--	--	--	30
31	PANEL PP1 (E)	225 A	3	30.34	21.1					3	400 A	PANEL LPC (E)	32
33	--	--	--			18.66	19.55			--	--	--	34
35	--	--	--					18.54	18.8	--	--	--	36
		TOTAL LOAD:		99440 VA		86210 VA		85340 VA					
		TOTAL AMPS:		359 A		312 A		308 A					

LEGEND:

NOTES: PROVIDE PROVISIONS FOR LOCKING IN THE OPEN POSITION FOR BREAKERS FEEDING TO REMOTELY LOCATED TRANSFORMERS.

LOAD CLASSIFICATION	CONNECTED LOAD	DEMAND FACTOR	ESTIMATED DEMAND	PANEL TOTALS	
Mechanical Equipment	840 VA	100.00%	840 VA		
Spare	270150 VA	100.00%	270150 VA	**TOTAL CONNECTED LOAD:**	270990 VA
				TOTAL ESTIMATED DEMAND:	270990 VA
				TOTAL CONNECTED CURRENT:	326 A
				TOTAL EST. DEMAND CURRENT	326 A

Branch Panel: (E) PANEL PP1

LOCATION: MAINTENANCE BAYS 105B
SUPPLY FROM: (E) PANEL MDP
MOUNTING: Surface
VOLTS: 480Y/277V
PHASES: 3
WIRES: 4
A.I.C. RATING: 25000
MAINS TYPE: MCB
BUS RATING: 200 A

CKT	CIRCUIT DESCRIPTION	TRIP	POLES	A		B		C		POLES	TRIP	CIRCUIT DESCRIPTION	CKT
1	RTU-1 (E)	20 A	3	3.9	3.6					3	20 A	RTU-2 (E)	2
3	--	--	--			3.9	3.6			--	--	--	4
5	--	--	--					3.9	3.6	--	--	--	6
7	MAU-1A (E)	20 A	3	3	0.5					3	20 A	F-1 (E)	8
9	--	--	--			3	0.5			--	--	--	10
11	--	--	--					3	0.5	--	--	--	12
13	EF-1 (E)	20 A	3	0.7	0.5					3	20 A	F-2 (E)	14
15	--	--	--			0.7	0.5			--	--	--	16
17	--	--	--					0.7	0.5	--	--	--	18
19	EF-2 (E)	20 A	3	0.7	0.5					3	20 A	F-3 (E)	20
21	--	--	--			0.7	0.5			--	--	--	22
23	--	--	--					0.7	0.5	--	--	--	24
25	F-6 (E)	20 A	3	0.5	0.5					3	20 A	F-4 (E)	26
27	--	--	--			0.5	0.5			--	--	--	28
29	--	--	--					0.5	0.5	--	--	--	30
31	EWH-1 (E)	40 A	1	9	0.5					3	20 A	F-5 (E)	32
33	SPARE	20 A	1			0	0.5			--	--	--	34
35	SPARE	20 A	1					0	0.5	--	--	--	36
37	T-RP (E)	50 A	3	4.24	0.8					3	20 A	CRANE (E)	38
39	--	--	--			1.56	0.8			--	--	--	40
41	--	--	--					1.44	0.8	--	--	--	42
		TOTAL LOAD:		30340 VA		18660 VA		18540 VA					
		TOTAL AMPS:		110 A		67 A		67 A					

LEGEND:

NOTES: PROVIDE PROVISIONS FOR LOCKING IN THE OPEN POSITION FOR BREAKERS FEEDING TO REMOTELY LOCATED TRANSFORMERS.

LOAD CLASSIFICATION	CONNECTED LOAD	DEMAND FACTOR	ESTIMATED DEMAND	PANEL TOTALS	
Mechanical Equipment	840 VA	100.00%	840 VA		
Spare	66700 VA	100.00%	66700 VA	**TOTAL CONNECTED LOAD:**	67540 VA
				TOTAL ESTIMATED DEMAND:	67540 VA
				TOTAL CONNECTED CURRENT:	81 A
				TOTAL EST. DEMAND CURRENT	81 A

Branch Panel: (E) PANEL RP

LOCATION: MAINTENANCE BAYS 105B
SUPPLY FROM: (E) T-RP
MOUNTING: Surface
VOLTS: 208Y/120V
PHASES: 3
WIRES: 4
A.I.C. RATING: 14000
MAINS TYPE: MCB
BUS RATING: 80 A

CKT	CIRCUIT DESCRIPTION	TRIP	POLES	A		B		C		POLES	TRIP	CIRCUIT DESCRIPTION	CKT
1	FOOD DISPOSER, HEATER (E)	20 A	1	1.6	1.2					2	20 A	HAND DRYER (E)	2
3	**IRH-1,2,3**	20 A	1			0.36	1.2			--	--	--	4
5	**IRH-6,7**	20 A	1					0.24	1.2	2	20 A	HAND DRYER (E)	6
7	**IRH-4,5**	20 A	1	0.24	1.2					--	--	--	8
9	**SPARE**	20 A	1			0	0			1	20 A	SPARE	10
11	**SPARE**	20 A	1					0	0	1	20 A	SPARE	12
13	**SPARE**	20 A	1	0	0					1	20 A	SPARE	14
15	**SPARE**	20 A	1			0	0			1	20 A	SPARE	16
17	SPARE	20 A	1					0	0	1	20 A	SPARE	18
		TOTAL LOAD:		4240 VA		1560 VA		1440 VA					
		TOTAL AMPS:		35 A		13 A		12 A					

LEGEND:

NOTES: PROVIDE PROVISIONS FOR LOCKING IN THE OPEN POSITION FOR BREAKERS FEEDING TO REMOTELY LOCATED TRANSFORMERS.

LOAD CLASSIFICATION	CONNECTED LOAD	DEMAND FACTOR	ESTIMATED DEMAND	PANEL TOTALS	
Mechanical Equipment	840 VA	100.00%	840 VA		
Spare	6400 VA	100.00%	6400 VA	**TOTAL CONNECTED LOAD:**	7240 VA
				TOTAL ESTIMATED DEMAND:	7240 VA
				TOTAL CONNECTED CURRENT:	20 A
				TOTAL EST. DEMAND CURRENT	20 A

105th AIRLIFT WING

MARK	DESCRIPTION	DATE
4	ISSUE FOR CONSTRUCTION	29 MAY 2026
3	TYPE B-3 (100%) FINAL DESIGN	26 FEB 2026
2	TYPE B-2 (100%) PRE-FINAL DESIGN	18 JUL 2025
1	TYPE A-2 (35%) SUBMITTAL	10 APR 2024

ISSUE DATE: 29 MAY 2026
SOLICITATION NO.:
CONTRACT NO.: FA8903-21-D-0013

DESIGNED BY: J. HARLAN
DRAWN BY: R. BARNARD
CHECKED BY: J. HOOVER
SUBMITTED BY: S. FORD
SIZE: ANSI D

NATIONAL GUARD BUREAU
1 MAGUIRE WAY
NEWBURGH, NY 12550

TETRA TECH

105TH AIRLIFT WING, AIR NATIONAL GUARD BASE, STEWART INTERNATIONAL AIRPORT, MAGUIRE WAY, NEWBURGH, NY 12550
ENERGY: REPAIR BUILDING 200
FY2026
WHAY 142004

ELECTRICAL SCHEDULES

SHEET ID
E-602

100% SUBMITTAL