TABLE OF CONTENTS

SECTION 1 - THE SCHEDULE

- SF-1449 cover sheet
- Continuation To SF-1449, RFQ Number 19MX5326Q0032, Prices, Block 23
- Continuation To SF-1449, RFQ Number 19MX5326Q0032, Schedule Of Supplies/Services, Block 20 Description/Specifications/Work Statement
- Attachment A to Statement of Work
- Attachment B to Equipment List
- Attachment C to Payment Registration Form – Pesos
- Attachment D to Payment Registration– USD to a bank in the United States
- Attachment E to Payment Registration– USD to a bank in Mexico
- Attachment F to Vendor Portal Registration
- Attachment G Safety Plan

SECTION 2 - CONTRACT CLAUSES

- Contract Clauses
- Addendum to Contract Clauses - FAR and DOSAR Clauses not Prescribed in Part 12

SECTION 3 - SOLICITATION PROVISIONS

- Solicitation Provisions
- Addendum to Solicitation Provisions - FAR and DOSAR Provisions not Prescribed in Part 12

SECTION 4 - EVALUATION FACTORS

- Evaluation Factors
- Addendum to Evaluation Factors - FAR and DOSAR Provisions not Prescribed in Part 12

SECTION 5 - REPRESENTATIONS AND CERTIFICATIONS

- Addendum to Offeror Representations and Certifications - FAR and DOSAR Provisions not Prescribed in Part 12

SECTION 1 - THE SCHEDULE
CONTINUATION TO SF-1449
RFQ NUMBER 19MX5326Q0032
PRICES, BLOCK 23

1. SCOPE OF SERVICES

1.1 General.

The Contractor shall be responsible for performing Preventive Maintenance and Repair for Medium Voltage Electrical Equipment. These services shall result to maintain medium voltage demarcation switches, switchgears, and transformers in safe, reliable and efficient operating condition worldwide.
The Contractor must demonstrate a high level of expertise, along with the necessary abilities, resources, licenses, and permits to perform the specified activities in compliance with all applicable local and federal Mexican regulations. Additionally, the contractor shall adhere to the highest industry standards and maintain superior quality in the execution of these duties. Excellence in customer service is also required as requested and approved by the Contracting Officer in accordance with the specifications, terms and conditions set forth herein.

1.2 Contract Type.

This is a firm-fixed price contract for routine maintenance services, including any repair(s) required in addition to safety inspection and testing at specified intervals, to be paid at the appropriate rates. These rates include all costs associated with providing electrical maintenance and repair services in accordance with manufacturer's warranty including materials, labor, insurance, overhead, profit and VAT (if applicable).

1.3 Period of Performance.

The performance period under this contract will commence on the date listed in the Award Letter and continue for twelve (12) months. This contract also contains FAR 52.217-9. "Option to Extend the Term of the Contract". This option allows two (2) additional 12-month periods of performance.) Site visits for Preventive Maintenance and Repair services must be scheduled with a minimum of ten (10) business days' advance notice to ensure proper access and support.

1.4 Currency.

1.4.1 Offer and Payment in U.S. Dollars.

U.S. firms are eligible to be paid in U.S. dollars. U.S. firms desiring to be paid in U.S. dollars should submit their offer in U.S. dollars. A U.S. firm is defined as a company which operates as a corporation incorporated under the laws of a state within the United States. Local companies are eligible to be paid in U.S. dollars provided that such company has a bank account in U.S. dollars at a Local Bank.

1.4.2 Offers and Payment in Pesos, Mexican Currency.

Any firm that is not a U.S. firm is a foreign firm. Any local or foreign firm that does not meet the definition of a U.S. firm shall submit its prices and receive payment in local currency unless the foreign or local firm has a U.S. dollar bank account in Mexico.

1.5 Value Added Tax.

1.5.1 U.S. Firms.
Value Added Tax (VAT) is not applicable to U.S. firms; therefore, it shall not be included in U.S. firm's rates or Invoices.

1.5.2 Local Companies.
Value Added Tax (VAT) for offers submitted by local companies, either in U.S. Dollars or in Pesos, Mexican currency, is not included in line-item rates. Instead, it will be priced as a separate amount in the contract and on the Invoices. Local law dictates the portion of the contract price that is subject to VAT; this percentage is multiplied only against that portion.

1.6 Pricing.

The fixed prices established below for the Base Year maintenance services for the Medium Voltage Electrical Equipment plus two (2) Option Years are fully loaded rates that include all work, including furnishing any managerial, administrative, and direct labor (in compliance with any local regulations), materials, overhead, insurance, and profit. Any costs not separately priced shall be considered to be included in the overhead and other indirect costs. The U.S. Government will not pay any additional expenses.

1.6.1 Base Year Prices.

The firm fixed-price for this Base Year shall be a fully loaded rate.

As per paragraph 1.4 above, Base Year Prices are in _____ [Insert Currency].

CLIN	**Type of Service / Equipment**	**Qty**	**Model**	**Switchgear / Transformer Serial Number**	**Unit price / service ($)**	**Total per Year ($)**
001	Medium Voltage Metal Enclosed Switchgear MV-UTIL-1 (23 kV)	1	Metal Enclosed Switchgear – HVL/cc	FACTORY ORDER 40021516-412		
002	Medium Voltage Metal Enclosed Switchgear MCDS-1 (23 kV	1	MASTERCLAD METAL CLAD INDOOR SWITCHGEAR MAIN GEAR CLASS 6055	FACTORY ORDER 40021516-413		

003	Medium Voltage Metal Enclosed Interrupter switch TX1-MV-NOB-NE	1	LOAD INTERRUPTOR 44036-325-50	FACTORY ORDER 40021516-506		
004	Medium Voltage Metal Enclosed Interrupter switch TX1-MV-NOB-NU	1	LOAD INTERRUPTOR 44036-325-50	FACTORY ORDER 40021516-508		
005	Medium Voltage Metal Enclosed Interrupter switch TX1-MV-NOB-SE	1	LOAD INTERRUPTOR 44036-325-50	FACTORY ORDER 40021516-507		
006	Medium Voltage Metal Enclosed Interrupter switch TX1-MV-NOB-SU	1	LOAD INTERRUPTOR 44036-325-50	FACTORY ORDER 40021516-509		
007	Medium Voltage Metal Enclosed Interrupter switch TX2-MV-NOB-NE	1	LOAD INTERRUPTOR 44036-325-50	FACTORY ORDER 40021516-418		
008	Medium Voltage Metal Enclosed Interrupter switch TX2-MV-NOB-NU	1	LOAD INTERRUPTOR 44036-325-50	FACTORY ORDER 40021516-416		
009	Medium Voltage Metal Enclosed Interrupter switch TX2-MV-NOB-SE	1	LOAD INTERRUPTOR 44036-325-50	FACTORY ORDER 40021516-510		
010	Medium Voltage Metal Enclosed Interrupter switch TX2-MV-NOB-SU	1	LOAD INTERRUPTOR 44036-325-50	FACTORY ORDER 40021516-511		
011	5 MVA TRANSFORMER #1	1	CA202003EN	0002KA68X2HA		
012	5 MVA TRANSFORMER #2	1	CA202003EN	0002KA68X2HA		
013	TRANSFORMER TX1-MV-NOB-N-E	1	Cooper Power Series. Triplex Indoor-Powercenter (Step UP transformers)	Triplex OOOOBA70FMMA single XFO OOOOBA24EMLA		
014	TRANSFORMER TX1-MV-NOB-N-U	1	Cooper Power Series. Triplex Indoor-Powercenter (Step UP transformers)	Triplex OOOOBA70FMMA single XFO OOOOBA24EMLA		
015	TRANSFORMER TX1-MV-NOB-S-E	1	Cooper Power Series. Triplex Indoor-	Triplex OOOOBA70FMMA single		

			Powercenter (Step UP transformers)	XFO OOOOBA24E MLA		
016	TRANSFORMER TX1-MV-NOB-S-U	1	Cooper Power Series. Triplex Indoor-Powercenter (Step UP transformers)	Triplex OOOOBA70F MMA single XFO OOOOBA24E MLA		
017	TRANSFORMER TX2-MV-NOB-N-U	1	Cooper Power Series. Triplex Indoor-Powercenter (Step DOWN transformers)	Triplex OOOOBA70FJ YA single XFO OOOOBA24E 3DA		
018	TRANSFORMER TX2-MV-NOB-N-E	1	Cooper Power Series. Triplex Indoor-Powercenter (Step DOWN transformers)	Triplex OOOOBA70FJ YA single XFO OOOOBA24E 3DA		
019	TRANSFORMER TX2-MV-NOB-S-E	1	Cooper Power Series. Triplex Indoor-Powercenter (Step DOWN transformers)	Triplex OOOOBA70FJ YA single XFO OOOOBA24E 3DA		
020	TRANSFORMER TX2-MV-NOB-S-U	1	Cooper Power Series. Triplex Indoor-Powercenter (Step DOWN transformers)	Triplex OOOOBA70FJ YA single XFO OOOOBA24E 3DA		
Subtotal Base Year						
Value Added Tax (VAT)						
Total Base Year						

1.6.2. First Option Year Prices.

The firm fixed-price for this First Option Year shall be a fully loaded rate.

As per paragraph 1.4 above, Base Year Prices are in _____ *[Insert Currency]*.

CLIN	**Type of Service / Equipment**	**Qty**	**Model**	**Switchgear / Transformer Serial Number**	**Unit price / service ($)**	**Total per Year ($)**
101	Medium Voltage Metal Enclosed Switchgear MV-UTIL-1 (23 kV)	1	Metal Enclosed Switchgear – HVL/cc	FACTORY ORDER 40021516-412		

102	Medium Voltage Metal Enclosed Switchgear MCDS-1 (23 kV	1	MASTERCLAD METAL CLAD INDOOR SWITCHGEAR MAIN GEAR CLASS 6055	FACTORY ORDER 40021516-413		
103	Medium Voltage Metal Enclosed Interrupter switch TX1-MV-NOB-NE	1	LOAD INTERRUPTOR 44036-325-50	FACTORY ORDER 40021516-506		
104	Medium Voltage Metal Enclosed Interrupter switch TX1-MV-NOB-NU	1	LOAD INTERRUPTOR 44036-325-50	FACTORY ORDER 40021516-508		
105	Medium Voltage Metal Enclosed Interrupter switch TX1-MV-NOB-SE	1	LOAD INTERRUPTOR 44036-325-50	FACTORY ORDER 40021516-507		
106	Medium Voltage Metal Enclosed Interrupter switch TX1-MV-NOB-SU	1	LOAD INTERRUPTOR 44036-325-50	FACTORY ORDER 40021516-509		
107	Medium Voltage Metal Enclosed Interrupter switch TX2-MV-NOB-NE	1	LOAD INTERRUPTOR 44036-325-50	FACTORY ORDER 40021516-418		
108	Medium Voltage Metal Enclosed Interrupter switch TX2-MV-NOB-NU	1	LOAD INTERRUPTOR 44036-325-50	FACTORY ORDER 40021516-416		
109	Medium Voltage Metal Enclosed Interrupter switch TX2-MV-NOB-SE	1	LOAD INTERRUPTOR 44036-325-50	FACTORY ORDER 40021516-510		
110	Medium Voltage Metal Enclosed Interrupter switch TX2-MV-NOB-SU	1	LOAD INTERRUPTOR 44036-325-50	FACTORY ORDER 40021516-511		
111	5 MVA TRANSFORMER #1	1	CA202003EN	0002KA68X2HA		
112	5 MVA TRANSFORMER #2	1	CA202003EN	0002KA68X2HA		
113	TRANSFORMER TX1-MV-NOB-N-E	1	Cooper Power Series. Triplex Indoor-Powercenter (Step UP transformers)	Triplex OOOOBA70FMMA single XFO OOOOBA24EMLA		
114	TRANSFORMER TX1-MV-NOB-N-U	1	Cooper Power Series. Triplex	Triplex OOOOBA70F		

			Indoor-Powercenter (Step UP transformers)	MMA single XFO OOOOBA24E MLA		
115	TRANSFORMER TX1-MV-NOB-S-E	1	Cooper Power Series. Triplex Indoor-Powercenter (Step UP transformers)	Triplex OOOOBA70F MMA single XFO OOOOBA24E MLA		
116	TRANSFORMER TX1-MV-NOB-S-U	1	Cooper Power Series. Triplex Indoor-Powercenter (Step UP transformers)	Triplex OOOOBA70F MMA single XFO OOOOBA24E MLA		
117	TRANSFORMER TX2-MV-NOB-N-U	1	Cooper Power Series. Triplex Indoor-Powercenter (Step DOWN transformers)	Triplex OOOOBA70FJ YA single XFO OOOOBA24E 3DA		
118	TRANSFORMER TX2-MV-NOB-N-E	1	Cooper Power Series. Triplex Indoor-Powercenter (Step DOWN transformers)	Triplex OOOOBA70FJ YA single XFO OOOOBA24E 3DA		
119	TRANSFORMER TX2-MV-NOB-S-E	1	Cooper Power Series. Triplex Indoor-Powercenter (Step DOWN transformers)	Triplex OOOOBA70FJ YA single XFO OOOOBA24E 3DA		
120	TRANSFORMER TX2-MV-NOB-S-U	1	Cooper Power Series. Triplex Indoor-Powercenter (Step DOWN transformers)	Triplex OOOOBA70FJ YA single XFO OOOOBA24E 3DA		
Subtotal Base Year						
Value Added Tax (VAT)						
Total Base Year						

1.6.3 Second Option Year Prices.

The firm fixed-price for this Second Option Year shall be a fully loaded rate.

As per paragraph 1.4 above, Base Year Prices are in _____ *[Insert Currency]*.

CLIN	Type of Service / Equipment	Qty	Model	Switchgear / Transformer Serial Number	Unit price / service ($)	Total per Year ($)
201	Medium Voltage Metal Enclosed Switchgear MV-UTIL-1 (23 kV)	1	Metal Enclosed Switchgear – HVL/cc	FACTORY ORDER 40021516-412		
202	Medium Voltage Metal Enclosed Switchgear MCDS-1 (23 kV	1	MASTERCLAD METAL CLAD INDOOR SWITCHGEAR MAIN GEAR CLASS 6055	FACTORY ORDER 40021516-413		
203	Medium Voltage Metal Enclosed Interrupter switch TX1-MV-NOB-NE	1	LOAD INTERRUPTOR 44036-325-50	FACTORY ORDER 40021516-506		
204	Medium Voltage Metal Enclosed Interrupter switch TX1-MV-NOB-NU	1	LOAD INTERRUPTOR 44036-325-50	FACTORY ORDER 40021516-508		
205	Medium Voltage Metal Enclosed Interrupter switch TX1-MV-NOB-SE	1	LOAD INTERRUPTOR 44036-325-50	FACTORY ORDER 40021516-507		
206	Medium Voltage Metal Enclosed Interrupter switch TX1-MV-NOB-SU	1	LOAD INTERRUPTOR 44036-325-50	FACTORY ORDER 40021516-509		
207	Medium Voltage Metal Enclosed Interrupter switch TX2-MV-NOB-NE	1	LOAD INTERRUPTOR 44036-325-50	FACTORY ORDER 40021516-418		
208	Medium Voltage Metal Enclosed Interrupter switch TX2-MV-NOB-NU	1	LOAD INTERRUPTOR 44036-325-50	FACTORY ORDER 40021516-416		
209	Medium Voltage Metal Enclosed Interrupter switch TX2-MV-NOB-SE	1	LOAD INTERRUPTOR 44036-325-50	FACTORY ORDER 40021516-510		
210	Medium Voltage Metal Enclosed Interrupter switch TX2-MV-NOB-SU	1	LOAD INTERRUPTOR 44036-325-50	FACTORY ORDER 40021516-511		
211	5 MVA TRANSFORMER #1	1	CA202003EN	0002KA68X2HA		
212	5 MVA TRANSFORMER #2	1	CA202003EN	0002KA68X2HA		

213	TRANSFORMER TX1-MV-NOB-N-E	1	Cooper Power Series. Triplex Indoor-Powercenter (Step UP transformers)	Triplex OOOOBA70F MMA single XFO OOOOBA24E MLA		
214	TRANSFORMER TX1-MV-NOB-N-U	1	Cooper Power Series. Triplex Indoor-Powercenter (Step UP transformers)	Triplex OOOOBA70F MMA single XFO OOOOBA24E MLA		
215	TRANSFORMER TX1-MV-NOB-S-E	1	Cooper Power Series. Triplex Indoor-Powercenter (Step UP transformers)	Triplex OOOOBA70F MMA single XFO OOOOBA24E MLA		
216	TRANSFORMER TX1-MV-NOB-S-U	1	Cooper Power Series. Triplex Indoor-Powercenter (Step UP transformers)	Triplex OOOOBA70F MMA single XFO OOOOBA24E MLA		
217	TRANSFORMER TX2-MV-NOB-N-U	1	Cooper Power Series. Triplex Indoor-Powercenter (Step DOWN transformers)	Triplex OOOOBA70FJ YA single XFO OOOOBA24E 3DA		
218	TRANSFORMER TX2-MV-NOB-N-E	1	Cooper Power Series. Triplex Indoor-Powercenter (Step DOWN transformers)	Triplex OOOOBA70FJ YA single XFO OOOOBA24E 3DA		
219	TRANSFORMER TX2-MV-NOB-S-E	1	Cooper Power Series. Triplex Indoor-Powercenter (Step DOWN transformers)	Triplex OOOOBA70FJ YA single XFO OOOOBA24E 3DA		
220	TRANSFORMER TX2-MV-NOB-S-U	1	Cooper Power Series. Triplex Indoor-Powercenter (Step DOWN transformers)	Triplex OOOOBA70FJ YA single XFO OOOOBA24E 3DA		
Subtotal Base Year						
Value Added Tax (VAT)						
Total Base Year						

1.6.4 GRAND TOTAL OF BASE AND ALL OPTION YEARS	
Base Year Total	
Option Year 1 Total	
Option Year 2 Total	
GRAND TOTAL	

CONTINUATION TO SF-1449,
RFQ NUMBER 19MX5326Q0032
SCHEDULE OF SUPPLIES/SERVICES, BLOCK 20
DESCRIPTION/SPECIFICATIONS/WORK STATEMENT

2. ACRONYMS

- CDMX: Mexico City
- CO: Contracting Officer
- COR: Contracting Officer's Representative
- DS: Diplomatic Security
- FAC: Facility Manager
- FM: Facility Manager
- GSO: General Service Office
- HAZMAT: Hazardous Materials
- JHA: Job Hazards Analysis
- MSDS: Material Safety Data Sheet
- O&M: Operations and Maintenance
- OEM: Original Equipment Manufacturer
- PCO: Post Control Officer
- PM: Preventive Maintenance
- PMSC: Preventive Maintenance System
- POSHO: Post Occupation Safety and Health Officer
- QAP: Quality Assurance Plan
- RSO: Regional Security Officer
- SBU: Sensitive But Unclasssified
- SOW: Statement of Works
- SPT: Safety Plan Template
- US: United States
- USPP: United States Personal Property
- VFD: Variable Frequency Drive
- PCC: Post Communications Center
- CAA: Controlled-Access Area
- CLIN: Contract Line Item Numbers
- CY: Calendar Year
- FAR: Federal Acquisition Regulation

3. DESCRIPTION

The American Embassy in Mexico City requires services of a Contractor to maintain medium voltage demarcation switches, switchgears, and transformers in safe, reliable and efficient operating condition worldwide.

4. NOTICE TO PROCEED

After contract award and submission of acceptable insurance certificates and copies of all applicable licenses and permits, the Contracting Officer will issue a Notice to Proceed. The Notice to Proceed will establish a date (a minimum of ten (10) days from date of contract award unless the Contractor agrees to an earlier date) on which performance shall start.

5. GENERAL REQUIREMENTS

5.1 Procedures, Planning And Scheduling

The Contractor shall implement all work control procedures necessary to ensure timely processing of work requirements. However, the work requirements may be performed in any order.
The Contractor shall plan, estimate, and schedule all work to assure material, labor, and equipment are available to complete work requirements within the specified time limits and in conformance with the quality standards established herein.

5.2 Scheduling

The Contractor shall schedule and arrange work so as to cause the least interference with the normal Post operations. In those cases where some interference is unavoidable, the Contractor shall make every effort to minimize the impact of the interference and its effects on the occupants or users.
The intent of the Government is to allow the Contractor to develop an optimal formal schedule rather than to impose a fixed schedule which in some cases may not be appropriate or cost effective. In developing work schedules, the Contractor shall consider and rely on: (1) contract requirements, (2) past Government experience; (3) the Contractor's own experience; (4) industry standards and guides; and (5) Post input. All work schedules required by this statement of work shall be electronically documented and updated and made available to the Contracting Officer's Representative (COR) upon request, verbal or written. If the COR determines that the Contractor’s schedule conflicts with critical Post operations, the Contractor shall modify the schedule as required.

Hours of performance
The Contractor shall maintain work schedules. The schedules shall take into consideration the hours that the staff can effectively perform their services without placing a burden on the security personnel of the Post. The Contractor shall deliver standard services between the hours of 8:00

AM and 4:30 PM Monday through Friday. No work shall be performed on US Government and local holidays. Below is a list of the holidays.

Date	Holiday	US/Local
Jan 01	New Year's Day	Am
Jan 15	Birthday of Martin Luther King, Jr.	Am
Feb 5	Anniversary of the Mexican Constitution	Mx
Feb 22	President's Day (Washington's Birthday)	Am
Mar 21	Benito Juarez's Birthday	Mx
Thursday of the 1st or 2nd week of April	Holy Thursday	Mx
Friday of the 1st or 2nd week of April	Good Friday	Mx
May 1	Mexican Labor Day	Mx
May 5	Anniversary of the Battle of Puebla	Mx
May 10	Mother's Day	Mx
Last Monday of May	Memorial Day	Am
Jun 19	Juneteenth	Am
Jul 04	Independence Day	Am
1st Monday of September	Labor Day	Am
Sep 16	Mexican Independence Day	Mx
Oct 1	Presidential Transition Day	Mx
2nd Monday in October	Columbus Day	Am
Nov 2	All Soul's Day	Mx
Nov 20	Anniversary of the Mexican Revolution	Mx
Nov 11	Veterans Day	Am
4th Thursday of Nov	Thanksgiving Day	Am
Dec 12	Day of the Virgin Guadalupe	Mx
Dec 25	Christmas	Am

5.3 Planned Facility Shutdown

A planned system transfers shall be scheduled and approved by the Facility Manager at each location. The contractor must schedule work to maintain flexibility as system transfers from utility power to generator power may not be granted on the date(s) requested. The Contractor shall accomplish the transfer work in a coordinated effort within the planned schedule. The intent is to schedule the transfer from utility power to generator power prior to the start of normal operations at Post, and then to transfer from generator power to utility power at the end of normal operating hours. Notice of changes to the approved transfer schedule will be provided to the Contractor by the Government not less than 24 hours or as technically feasible before the scheduled event. Shutdown schedule changes required by the Government and made with sufficient notice to the Contractor shall be made at no additional cost to the Government.

Electrical shutdowns and operation of electrical breakers, including bypass transfers, shall be accomplished only by qualified personnel and upon advance approval from the Facility Manager. Where fire protection, detection, or evacuation alarms are affected, advance written approval of the Facility Manager shall be obtained. Proper lock out/tag out procedures shall be followed to maximize safety. The Contractor shall supply all lock out/tag out materials. Power shall be maintained to all operational loads during normal working hours and to all critical loads at all times, except where otherwise approved by Post's IMO/IPO representative.

5.4. Logistics Planning

The Contractor shall be responsible for coordinating all logistics associated with the shipment of tools, materials, and equipment to and from the work site. This includes adequate coordination with overseas diplomatic missions to determine shipment planning and execution requirements, as required and as applicable.

5.5. Personnel Travel

The Contractor shall initiate and process all travel arrangements. However, the contractor shall under no circumstances incur any costs related to travel without approval from the COR. All officially directed travel, per diem, and associated miscellaneous expenses for site surveys will be reimbursed under the most current provisions of the Federal Travel Regulations. The Contractor shall ensure that all costs are allowable under the provisions of the Federal Travel Regulations and shall certify that travel vouchers are correct prior to forwarding them to the COR for payment.

The Contractor shall be responsible for coordinating all personnel travel for the Contractor's employees and subcontractor employees to and from the project site. This includes coordination with external Government/non-Government organizations through which these requirements are processed, e.g. travel agencies, passport offices, and foreign consulates for visas.

6. SECURITY AND ACCESS PROCEDURES

Contractor will coordinate with post and the COR for access procedures.

6.1 Visit Authorization Request

The contractor shall submit a Visit Authorization Request (VAR) for the traveling technicians to Posts point of contact at the following address:

COR
Jorge Enriquez –Electrical Engineer
EnriquezJ2@state.gov

6.2 Country Clearance Process

For the purpose of obtaining country clearance, the contactor shall furnish to the COR, ***at least fifteen (15) days in advance of travel***, for each contracted employee, including subcontractors, the following data:

1. traveler full name,
2. traveler security clearance level
3. place of birth,
4. passport type and number,

5. passport country of issuance, and
6. complete travel itinerary including transit points, arrival and departure flight data and arrival and departure times and dates.

6.4 Provision of Personnel

6.4.1 Qualified Staff

This statement of work requires the awarded contractor to provide qualified and licensed technicians and responsible for providing all required information as stated in the following stipulations and listed in Section 4 Evaluation Factors, subsection 4.6 for Technical Evaluation.

Personnel changes may be necessary throughout the duration of this project. If the awarded contractor must make personnel changes or substitutions, the new members will be required to meet all stipulations of this Statement of Work. The notification of changes must be made to COR. Approval must be granted by COR prior to any travel arrangements. Failure to receive approval will result in unauthorized individual(s) being removed from Post at the contractor's expense.

The contractor shall promptly notify the COR in writing of any changes to the list of subcontractors, including additions, removals, or changes in contact information. If subcontracted labor does not exceed ten percent (10%), the contractor shall submit a written memorandum to the COR within five (5) business days of the Notice to Proceed, confirming that subcontracted labor does not exceed the ten percent (10%) threshold.

6.4.2 Safety

Safety is the highest priority on this and all OBO/CFSM/FAC projects. The contractor shall direct all of those under his charge to work safely. A Work Hazard Assessment shall be performed at each location prior to any work being performed. All safety concerns shall be brought to the attention of the Post Safety and Health Officer (POSHO) and/or the COR.

6.4.3 Conduct

The Government reserves the right to direct the Contractor to remove an employee from the worksite for failure to comply with the standards of conduct. The Contractor shall immediately replace such an employee to maintain continuity of services at no additional cost to the Government.

1. Neglect of duties shall not be condoned. This includes sleeping while on duty, unreasonable delays or failures to carry out assigned tasks, conducting personal affairs during duty hours and refusing to render assistance or cooperate in upholding the integrity of the worksite security.
2. The Contractor shall not condone disorderly conduct, use of abusive or offensive language, quarreling, and intimidation by words, actions, or fighting. Also included is participation in disruptive activities that interfere with normal and efficient Government operations.

3. The Contractor shall not allow its employees while on duty to possess, sell, consume, or be under the influence of intoxicants, drugs or substances which produce similar effects.

Contractor employees may be subject to criminal actions as allowed by law in certain circumstances. These circumstances include but are not limited to the following actions:

• Falsification or unlawful concealment, removal, mutilation, or destruction of any official documents or records or concealment of material facts by willful omission from official documents or records; unauthorized use of Government property, theft, vandalism, or immoral conduct; unethical or improper use of official authority or credentials; security violations; organizing or participating in gambling in any form; and misuse of weapons.

7. SCHEDULED PREVENTIVE MAINTENANCE SERVICES

7.1 General.

The intent of this scope is to ensure the operational readiness of compound Medium Voltage (MV) equipment. The awarded contractor must complete all aspects of this work statement. This entire work statement, each portion or step, applies to each individual MV demarcation switch, switchgear and Transformer

7.2 Maintenance and Repair

1. Coordinate site visit dates and work plan with the COR prior to making any travel arrangements.
2. Upon arrival at site, meet with the embassy Facility Manager to coordinate the scheduled transfer from the utility source to generator power. The Utility Company must de-energize from the Pole or Fuse Location so that the demarcation switchgear/switch is completely de-energized.
3. Discuss history of MV equipment service and note in the STR any known maintenance or repair actions performed on the system in the past five years, where applicable.
4. Contractor personnel must familiarize themselves with site power conditions, related compound power anomalies, and power distribution concerns.
5. Survey the existing embassy owned arc-flash personal protective equipment (PPE) and testing tools. Provide a site specific Bill of Material (BOM) for recommended and required safety equipment not present or past expiration date. Include part numbers, retail prices, and a supply sources for each item.
   Example:

   SALISBURY
   Black Exterior/Red Interior Electrical Glove Kit, Natural Rubber, 2 Class, Size 10
   Item # **3RMZ2** Mfr. Model # **GK214RB/10** Catalog Page # **N/A** Catalog Group # **E4077** UNSPSC # **46181504**

6. Verify Post's existing One-Line Diagram is posted for access in the associated

switchgear room. Make corrections necessary to reflect the current configuration.

7. Prior to equipment testing, ensure that Post generator system(s) and auto-transfer switch(s) are in automatic mode. Confirm adequate fuel levels in the generator day tanks.
8. Schedule a system outage and coordinate the power transfer with the site Facility Manager.
9. Follow all manufacturer's recommended safety practices and requirements. An electrical approved fire extinguisher (Class "C") and all NFPA 70E required PPE for the rated voltages and available fault currents must be present and in use. All safety equipment must be well maintained and meet the requirements for periodic inspection/certification.
10. Perform a visual inspection of the entire MV distribution system. Include transformer(s), demarcation disconnect switch, distribution cables, fuse holders, terminals, insulators, lightning arrestors, etc.
11. Perform infrared (IR) scanning and inspection of all energized MV equipment per NETA thermographic survey procedures and guidelines. Correct hotspot connections as applicable. Include in the final report only those IR photos that note a discrepancy or correction. Label all photographs.
12. Perform Lock Out/Tag Out procedures on all incoming medium voltage sources and on low voltage distribution breakers to prevent back feeding
13. For reporting purposes, photo document the MV isolation. Include photographs of LOTO, use of PPE, and the installation of safety grounds. Label all photographs..
14. Draw oil samples on all MV equipment. Conduct all manufacturer recommended tests.
15. Perform general maintenance (clean, adjust, and lubricate as required) the entire MV system from the demarcation switch to the step-down transformer. Examine closely for signs of carbon tracking and document all findings with photographs. Label all photographs.
    a. NOTE: The demarcation switch or switchgear may be owned and maintained by the Local Utility Company
16. Correct any minor deficiencies found using Post materials. Include photographs of deficiencies found or corrective measures taken. Label all photographs.

17. Provide two (2) site specific Bill of Materials (BOM) per each Post visit: BOM #1 - repair material not presently on site (as applicable), BOM #2 - missing items from Post's existing spares kit (see Attachment Z). Both BOM must note component name, part number, price and source.
    a. Example:

        SALISBURY

        40.0 cal./cm2 Flame-Resistant Coat/Overall Kit, 4-HRC, Gray, L

        Item # **6WU88** Mfr. Model # **SK40L** Catalog Page # **1754** Catalog Group # **D0676** UNSPSC # **46181533**

    If no items are required, note "Not Applicable" in the BOM section of the STR
18. Ensure the total voltage drop from the utility building to the Chancery building is less than 3% of nominal (desired host country voltage). Raise/lower the generator output as required. Match the MV transformer output voltage to within 3-volts of the

compound diesel generator voltage output.

19. The contractor shall note in the final report: defects, deficiencies, violations pertaining to equipment operation, safety hazards, safety code non-compliance. Provide photographs of all noted discrepancies and code violations along with the applicable code article in reference to the stated violation. Label all photographs.
20. Review and revise, as necessary, all existing site specific standard operating procedures (SOPs) for proper AVR isolation and lock-out procedures required for any maintenance action on the AVRs.
21. Label with P-touch (white label with black letters) the following information on the outside door of each completed AVR controller. The label can replace the previous service label: ***PM performed by (company name) via OBO/CFSM/FAC/PM on (date). For service or repair contact:…***
22. Re-energize the system and restore to automatic operation unless a noted safety concern exists. Upon encountering a hazardous situation, pre-existing or resulting from work performed under this scope, immediately contact the Post Facility Manager, Post electrical engineer or COR.
23. Prior to departure, send a summary email to Post Facility Manager, Post electrical engineer or COR.
24. Conduct an Out-brief with the site Facility Manager, or Facility Maintenance Representative, noting work completed and any safety concerns.
25. Provide a separate STR for each site visit location. Refer to section 4.0 for Executive Summary requirements and STR report format. Submit Executive Summary report within 10 days and STR within 30 days, of leaving Post.

7.3 Repairs

The Contractor shall make every attempt to repair any deficiency found during visit if possible. If the repair isn't possible during visit comply with 7.4

7.4 Replacement Parts, Materials and Supplies

The Contractor shall provide spare replacement parts as listed in Attachment A.

The Government shall be responsible for the disposal of all trash created while performing this work statement. The Contractor shall transport all waste materials to Post's designated disposal storage site.

8. PERFORMANCE AND DELIVERABLES

Provide a Trip Report for all activities done at post. The final report must outline site conditions, noted discrepancies, operational functionality, and applicable safety concerns. The report is to be a typed summary, written in the English language, not to exceed 10 MB in total size. Deliver the report electronically to COR at EnriquezJ2@state.gov Utilize the following report format:

1. Provide a one page Executive Summary noting scope completion, equipment status at

project completion, Provide a detailed Service Trip Report expounding on all findings/corrective measures, recommendations, and required follow-up items. Provide photographs as necessary. Label all photographs.

2. Provide all necessary BOM as outlined in the work requirements. In the event of failed MV equipment, the contractor shall provide a Root Cause Failure Analysis Overview (RCFAO), based on professional opinion and experience. Note all site conditions, findings, and observations without un-tanking the regulators or draining transformer. Provide a professional recommendation for follow-up work to restore the MV equipment to a fully functional and safe operational state.
3. Provide a detailed list with the nameplate data of each piece of MV equipment on site.
4. All materials identified for repair/replacement shall be ordered within 30 days of contract award. Shipping information at a later date.

5. Provide a typewritten report to Post Facilities Manager containing following:

a) System information (make, model, all device types).
b) Photo album before & after performing preventive maintenance.
c) Pass/Fail of each feature and type of component tested. If a device fails, note device type, address, and location within Post.
d) Findings & Observations; any comments on system (or device) condition pertaining to service life and dependability.
e) Full printout of test from system printer.
f) Recommendations.

The following items shall be delivered under this contract:

Description	QTY	Delivery Date	Deliver to
Names, biographic data, police clearance on Contractor personnel	1	5 days after contract award.	COR
Certificate of Insurance	1	10 days after contract award.	COR
Certification of disposal of toxic chemicals by local authorities	1	After each oil change Service.	COR
Checklist signed by Contractor's employee	1	After completion of each maintenance service.	COR
Narrative summary of all checks findings.	1	After completion of each Service.	COR
Laboratory report for chemical analysis	1	30 days after completion of each oil change service.	COR
Vibration Analysis report	1	30 days after completion of each oil change service.	COR
PMI/service Report	1	After completion of each Service.	COR

Applicable test and calibrations report	1	After completion of each service.	COR
Safety report. All incidents and near miss incidents.	1	After completion of each service.	COR
Invoice	1	After completion of each maintenance service.	COR

9. PERFORMANCE STANDARDS

The contractor shall ensure that all facilities affected by work performed under this scope be left in a condition acceptable to the Facility Manager and COR. If not, the following billing will be credited.

10. GOVERNMENT INSPECTIONS AND QUALITY ASSURANCE

The U.S. Government will monitor the Contractor's performance using a Quality Assurance Surveillance Program (QASP) through random inspections, scheduled inspections, or any other method of inspection that the U.S. Government determines best gauges the actual successful performance of this contract. As part of the Government's QASP, the U.S. Government may:

a. Review and, if warranted, reject any reports or other submittals required from the Contractor.
b. The COR will receive and document all complaints from Government personnel regarding the services provided. If appropriate, the COR will send the complaints to the Contractor for corrective action.
b. Review performance and service records, including but not limited to monthly progress reports, CMMS data, preventative maintenance data, operations systems/equipment data, alarm/alarm responses, condition monitoring data, RCM results data, systems and any computerized or hardcopy records maintained by the Contractor documenting performance under this contract.
c. Determine the adequacy of the Contractor's quality control program including contractors' documentation and the overall success of this program. The U.S. Government may order improvements, if it determines the program is insufficient or ineffective.
e. Conduct physical inspections of facility equipment and systems, to include programs and files maintained, and require notice of any deficiencies and corrective action(s) to mitigate further deficiencies.
f. Perform scheduled and unscheduled inspections with U.S. Government personnel or third party inspectors.

The Contractor will be evaluated on the basis of the successful performance or deficiencies, success or failure in meeting all contract requirements, and the Contractor's record of correcting deficiencies when noted. While corrective actions will be noted, a record of significant

performance deficiencies may lead to a performance evaluation that is less than satisfactory even if the Contractor takes corrective action. Any corrective actions requiring a CO intervention will result in a Contractor Performance Assessment Reports System (CPARS) negative notation even if corrected.

A QASP will be provided by the CO, through OBO/CFSM/FAC and the Facility Manager, and in accordance OBO Maintenance Standards and FAR subpart 46.4 to describe the performance surveillance process that will be used by the U.S. Embassy to manage the Contractor's compliance with and performance under this contract. The QASP will identify roles and responsibilities, summarize the performance requirements, and methods of surveillance used by U.S. Government to assure quality.

Performance Objective	**Scope of Work Paragraphs**	**Performance Threshold**
Services. Performs all services set forth in the Statement of Work (SOW)	Attachment A	All required services are performed and no more than one (1) customer complaint is received per month.

11. INSURANCE REQUIREMENTS

11.1 Personal Injury, Property Loss or Damage (Liability). The Contractor assumes absolute responsibility and liability for any and all personal injuries or death and property damage or losses suffered due to negligence of the Contractor's personnel in the performance of this Contract.

The Contractor's assumption of absolute liability is independent of any insurance policies.

11.2 Insurance. The Contractor, at its own expense, shall provide and maintain during the entire period of performance of this Contract, whatever insurance is legally necessary. The Contractor shall carry the following minimum insurance:

Public Liability Insurance

Property damage: $ 5,000.00 USD
Cumulative: $ 50,000.00 USD

Workers' Compensation and Employer's Liability

11.3 Worker's Compensation Insurance. The Contractor agrees to provide all employees with worker's compensation benefits as required under local laws (see FAR 52.228-4 "Worker's Compensation and War-Hazard Insurance Overseas").

12. LOCAL LAW REGISTRATION

If the local law or decree requires that one or both parties to the contract register the contract with the designated authorities to ensure compliance with this law or decree, the entire burden of this registration shall rest upon the Contractor. Any local or other taxes which may be assessed against the Contract shall be payable by the Contractor without Government reimbursement.

13 LICENSES AND PERMITS

The contractor shall perform the duties specified in this SOW in full compliance with all applicable local and federal regulations of Mexico and the United States, as well as applicable international standards and any additional regulations outlined in this document. The contractor shall also provide evidence of all necessary licenses, permits, and registrations required to complete the specified duties.

14 SAFETY REQUIREMENTS

The contractors shall provide and maintain work environments and procedures which will safeguard the public and Government personnel, property, materials, supplies, and equipment exposed to contractor operations and activities; contractors must avoid interruptions of Government operations and delays in project completion dates, and control costs in the performance of contract tasks. For these purposes, the contractor shall:

1. Submit a written Safety plan and JHA to the COR. The plan shall include specific management or technical procedures for effectively controlling hazards associated with the project/contract; the safety plan shall also include emergency procedures in case of any incident with his personnel.
2. Meet with the COR and the POSHO to discuss and develop a mutual understanding relative to the administration of the overall safety program.
3. Maintain an accurate record of all incidents that occurred under the contract resulting in death, injury, occupational disease, or damage to or theft of property, materials, supplies, or equipment.
4. Report all incidents/mishaps immediately in the manner indicated by the COR and/or POSHO.
5. Be responsible for its personnel and subcontractor's compliance with all the requirements of the Safety plan and JHA.
6. Provide appropriate safety barricades, signs, and signal lights.
7. Comply with the standards issued by any local government authority having jurisdiction over occupational health and safety issues.
8. Ensure that any additional safety measures that the COR and/or POSHO determines to be reasonably necessary for this purpose are accomplished.

9. Specify in the Safety plan and JHA the requirements and mitigation steps regarding safety if the work involves:
    a. Scaffolding.
    b. Work at heights.
    c. Trenching or other excavation.
    d. Earthmoving equipment.
    e. Temporary wiring, use of portable electric tools, or other recognized electrical hazards.
    f. Work in confined spaces.
    g. Use of hazardous materials – a material with a physical or health hazard
    h. Operations that create any kind of contamination inside an occupied building such as dust from demolition activities, paints, solvents, etc.
    i. Hazardous noise levels.
10. Comply with all the requirements included in the safety plan and the JHA, or any extra indications given by the POSHO and/or the COR.

The COR and/or the POSHO shall notify the CO and the contractor of any non-compliance with the safety requirements and the corrective actions required. This notice, when delivered to the contractor or the contractor's representative on site, shall be deemed sufficient notice of the non-compliance and corrective action required. After receiving the notice, the contractor shall immediately take corrective action. If the contractor fails or refuses to promptly take corrective action, the COR may issue an order suspending all or part of the work until satisfactory corrective action has been taken. The contractor shall not be entitled to any equitable adjustment of the contract price or extension of the performance schedule on any suspension of a work order issued related to safety violations detected.

15 PROCEDURES

If any Government personnel observe unacceptable services, either incomplete work or required services not being performed they should immediately contact the COR.

The COR will document any complaint of unacceptable service, either incomplete work or required services not being performed.

If the COR determines the complaint is invalid, the COR will advise the complainant. The COR will retain the annotated copy of the written complaint for his/her files.

If the COR determines the complaint is valid, the COR will inform the Contractor and give the Contractor additional time to correct the defect, if additional time is available. The COR shall determine how much time is reasonable.

The COR shall, as a minimum, orally notify the Contractor of any valid complaints.

If the Contractor disagrees with the complaint after investigation of the site and challenges the validity of the complaint, the Contractor will notify the COR. The COR will review the matter to determine the validity of the complaint.

The COR will consider complaints as resolved unless notified otherwise by the complainant.

Repeat customer complaints are not permitted for any services. If a repeat customer complaint is received for the same deficiency during the service period, the COR will contact the Contracting Officer for appropriate action under the Inspection clause.

16 CONTRACT OVERSIGHT

Government Contracting Officer (CO): TBD
Contracting Officer Representative (COR): Jorge Enriquez, EnriquezJ2@state.gov
Assistant Contracting Officer Representative (ACOR): TBD
Government Technical Monitors (GTMs): TBD

17 SUBMISSION OF INVOICES

The Contractor shall submit an invoice after each preventive maintenance service has been performed. Invoices must be accompanied by a signed copy of the Maintenance Checklist for the work performed including parts replacement and breakdown calls, if any. No invoice for preventive maintenance services will be considered for payment unless accompanied by the relevant documentation.

The Contractor should expect payment 30 days after completion of service or 30 days after receipt of invoice at the Embassy's payment office, whichever is later.

Attachment A - Statement of Work Switchgears

I. GENERAL INFORMATION:

The United States Embassy in Mexico City requires professional services and contractor cost proposals to perform preventive maintenance services of the facility's switchgears.

II. PROJECT REQUIREMENTS:

The Contractor shall perform preventive maintenance as described in this STATEMENT OF WORK. The objective of scheduled preventive maintenance is to eliminate system malfunction, breakdown and deterioration when unit is activated/running.

DESCRIPTION OF EQUIPMENT *:
**Please see attachment at the end of this sheet for more details*

III. GENERAL REQUIREMENTS:

The contractor shall provide the labor and materials required to carry out all preventive maintenance as outlined in this SOW. Embassy staff have service manuals for switchgears on-site. The contractor shall confirm on-site manuals are complete and current. The contractor shall provide the Contracting Officer's Representative (COR) a listing of any missing or out of date manuals.

IV. SCOPE OF WORK – SWITCHGEAR PREVENTIVE MAINTENANCE

The contractor shall provide all materials, supervision, labor, tools, and equipment to perform preventive maintenance. All personnel working in the vicinity shall wear and /or use appropriate safety protection while work is performed. Any questions or injuries **shall** be brought to the attention of the Post COR and Occupation Safety and Health Officer (POSHO). Material Safety Data Sheets (MSDS) shall be provided by the contractor for all HAZMAT materials. Copies will be provided to the COR for approval.

The contractor shall provide the COR with a list of necessary parts and materials. Lubricants, fuses, and preventive maintenance parts shall be provided at the expense of the U.S. Govt. Only fluids which meet or exceed manufacturer's specifications shall be used.

If any discrepancies are found with the switchgear that are not covered under this scope of work, the contractor shall provide the following:

1. Detailed report noting the discrepancy found.
2. Bill of Materials (BOM) to include component name, quantity, part #, and price for any repair material required and material lead time.
3. Price quote for repair labor.

SAFETY & SPECIAL INSTRUCTIONS:

1. Use appropriate personal protective equipment (PPE) when performing work.
2. Check all work areas, tools, and equipment to ensure unsafe conditions are eliminated or guarded against.
3. Follow site safety procedures.
4. Schedule maintenance with operating personnel and affected offices (security).
5. Follow approved lockout/tag out procedures in order to avoid the hazard of electrical shock, which could result in serious personal injury or death.
6. Review and follow the manufacturer's instructions.
7. Record results in the equipment history log.
8. Report all incidents and near miss incidents to COR and assist as requested in the investigation and corrective action.

At a minimum, the following work shall be completed:

Notes:

- Contractor shall submit to the COR for review, work sheet/checklist that will be used for performing maintenance service.
- A discrepancy report shall be submitted to the COR immediately upon discovery of any condition that could result in equipment failure.
- Test and inspection report shall be submitted to the COR within three days of completing work.

Maintenance Interval Schedule

The purpose of this Statement of Work is to ensure the switchgears for this facility are maintained according to manufacturer's recommendations to ensure the readiness and proper operation.

MAINTENANCE PROCEDURES:

Annually:

1. Visually inspect the entire switchgear for loose parts or connections. Slight discoloration or tarnish of the silver plate is normal and of no concern. Severe discoloration of the silver plate is a sign of an improper or loose contact and overheating.
2. Examine the switchgear for signs of overheating or excessive dirt or moisture.
3. Vacuum each compartment to remove dust, spider webs, and so forth. Wipe off the insulation with a clean cloth.
4. Visual and mechanical inspection to insure the proper operation of all installed meters, breakers, remote power monitoring equipment associated with the switchgear.
5. Inspect the cable load connectors, stand-off insulators, primary contact supports, and all accessible cable terminations for indications of insulation deterioration. Vacuum each compartment and wipe off all insulation. Replace removable back covers.
6. Withdraw each circuit breaker from its compartment, and thoroughly inspect each of the moving mechanisms in the compartment.
    A. The shutters should raise and lower smoothly with no indication of binding, twisting, hesitation, or hang-up. Inspect the shutter hardware. Tighten if necessary.
    B. The primary contacts should have a silver-gray appearance, indicating good contact with the circuit breaker separable contacts. Slight discoloration or tarnish of the silver plate on the primary contact is normal. Severe discoloration of the silver plat
    C. The ground contact bar should have marks indicating good contact with the circuit breaker sliding contacts. Clean the contact surfaces, removing grease and dirt buildup. Inspect and tighten the hardware and re- grease.
    D. Inspect the stationary control power receptacle, ensuring that the molding is free of cracks, the female contacts are clean, and the assembly is free to move. Clean the front and back surfaces of the receptacle to remove any contamination buildup.
    E. Lightly lubricate the primary contacts and the ground contacts.
    F. Lubricate all moving joints (shutters, MOC, TOC, and so forth).
    G. Check all terminal block connections for loose hardware and crimp-on terminal conditions. Make certain that the hinge wiring to the door is not frayed and has no insulation damage. Route all wires through the hinge loop.
7. Relays and instrument transformers:
    A. Perform a visual and mechanical inspection of relays and instrument transformers. Look for signs of loose or damaged or cracked insulation or connections.
    B. Inspect VT, CPT and Fuse Drawout Units as follows:
    C. Pull the drawer to the fully withdrawn position. Inspect the moving and primary and secondary contacts and the static ground contacts. Clean the contact surfaces, removing any burn or pit marks if required. Use an abrasive pad.
    D. Remove the current limiting fuses, and inspect the fuse clip and fuse contact surfaces. Check the transformer for indication of insulation deterioration. Tighten all hardware, including the secondary contact wiring terminals.
    E. Vacuum the compartment and drawer. Wipe off the insulation and control power transformer with a clean, dry cloth.
    F. Lightly lubricate the moving primary and secondary contacts and fingers.
    G. Lubricate all rollers and sliding parts.

H. Inspect the interlock mechanism for proper operation. Replace the current limiting fuses, but leave the drawer in the withdrawn position until all the inspection and maintenance is completed.

8. Inspect that all filters are in place, and the vents are clear, if required.
9. Re-energizing:
    A. Insert all of the circuit breakers to the test/disconnected position with their secondary control power plugs engaged, and close the compartment doors. Connect the control power source.
    B. Close the main source of power, and operate each circuit breaker electrically in the test/disconnected position.
    C. If all controls are functioning properly, disconnect the secondary control plugs. Rack the circuit breakers into the connected position. Close the circuit breakers and resume normal operation.
10. Ensure that the working space is maintained in front of all electrical gear per the National Electrical Code (NEC) requirements 36".
11. Clean up area, remove tags, and return to service.
12. Fill out maintenance checklist and return to service.

All friction surfaces and articulation in the circuit breaker, disconnector and earthing switch drives must be lubricated. Refer to manufacturers recommendations for approved lubricants and points of lubrication.

Spare Parts and Expendables Inventory.

Every 2 Years:
Provide the following maintenance items in the first year of the contract taking place.

1. Perform an infrared test before de-energizing the switchgear.
2. Visually inspect the entire switchgear for loose parts or connections. Slight discoloration or tarnish of the silver plate is normal and of no concern. Severe discoloration of the silver plate is a sign of an improper or loose contact and overheating.
3. Examine the switchgear for signs of overheating or excessive dirt or moisture.
4. Vacuum each compartment to remove dust, spider webs, and so forth. Wipe off the insulation with a clean cloth.
5. Inspect the cable load connectors, stand-off insulators, primary contact supports, and all accessible cable terminations for indications of insulation deterioration. Vacuum each compartment and wipe off all insulation. Replace removable back covers.
6. Withdraw each circuit breaker from its compartment and thoroughly inspect each of the moving mechanisms in the compartment.
    A. The shutters should raise and lower smoothly with no indication of binding, twisting, hesitation, or hang-up. Inspect the shutter hardware. Tighten if necessary.
    B. The primary contacts should have a silver-gray appearance, indicating good contact with the circuit breaker separable contacts. Slight discoloration or tarnish of the silver plate on the primary contact is normal. Severe discoloration of the silver plate is a sign of an improper or loose contact and overheating.
    C. The ground contact bar should have marks indicating good contact with the circuit breaker sliding contacts. Clean the contact surfaces, removing grease and dirt buildup. Inspect and tighten the hardware and re- grease.

    D. Inspect the stationary control power receptacle, ensuring that the molding is free of cracks, the

female contacts are clean, and the assembly is free to move. Clean the front and back surfaces of the receptacle to remove any contamination buildup.

E. Lightly lubricate the primary contacts and the ground contacts.
F. Lubricate all moving joints (shutters, MOC, TOC, and so forth).
G. Check all terminal block connections for loose hardware and crimp-on terminal conditions. Make certain that the hinge wiring to the door is not frayed and has no insulation damage. Route all wires through the hinge loop.

7. Relays and instrument transformers:
   A. Perform a visual and mechanical inspection of relays and instrument transformers. Look for signs of loose or damaged or cracked insulation or connections.
8. Inspect VT, CPT and Fuse Drawout Units as follows:
   A. Pull the drawer to the fully withdrawn position. Inspect the moving and primary and secondary contacts and the static ground contacts. Clean the contact surfaces, removing any burn or pit marks if required. Use an abrasive pad.
   B. Remove the current limiting fuses, and inspect the fuse clip and fuse contact surfaces. Check the transformer for indication of insulation deterioration. Tighten all hardware, including the secondary contact wiring terminals.
   C. Vacuum the compartment and drawer. Wipe off the insulation and control power transformer with a clean, dry cloth.
   D. Lightly lubricate the moving primary and secondary contacts and fingers.
   E. Lubricate all rollers and sliding parts.
   F. Inspect the interlock mechanism for proper operation. Replace the current limiting fuses, but leave the drawer in the withdrawn position until all the inspection and maintenance is completed.
9. Electrical Test:
   A. Perform insulation resistance tests for one minute on each bus section, phase-to-phase and phase-to-ground. Minimum test voltage is 2500VDC and minimum insulation resistance is 5000 megohms.
   B. Test all control and instrument transformers.
   C. Determine accuracy of all meters and calibrate watt-hour meters.
   D. Verify function of control transfer relays located in switchgear with multiple power sources.
   E. Verify function of synchronizing system.
   F. Tests relays for proper operation and record settings.
   G. Perform a ground resistance test.
10. Re-energizing:
   A. Insert all of the circuit breakers to the test/disconnected position with their secondary control power plugs engaged, and close the compartment doors. Connect the control power source.
   B. Close the main source of power, and operate each circuit breaker electrically in the test/disconnected position.
   C. If all controls are functioning properly, disconnect the secondary control plugs. Rack the circuit breakers into the connected position. Close the circuit breakers and resume normal operation.

11. Ensure that the working space is maintained in front of all electrical gear per the National Electrical Code (NEC) requirements 36”.
12. Perform an operational test and ensure all scenarios in the switchgear sequence of operation perform properly.
13. Clean up area, remove tags, and return to service.
14. Fill out maintenance checklist and report deficiencies.

All friction surfaces and articulation in the circuit breaker, disconnector and earthing switch drives must be lubricated. Refer to manufacturers recommendations for approved lubricants and points of lubrication.

Spare Parts and Expendables Inventory.

Equipment list:

	Equipment	Manufacturer	Model	Serial Number	Capacity	Specifications	Location
1	Medium Voltage Metal Enclosed Switchgear MV-UTIL-1 (23 kV)	SCHNEIDER ELECTRIC, SQUARE D	Metal Enclosed Switchgear – HVL/cc	FACTORY ORDER 40021516-412	600A	23k volts, 3 phase, 3 wire Delta, ungrounded, 125kv BIL, 60 Hz, 600A copper tin plated main bus, bare copper ground bus, type 3R outdoor non-walk in "A" enclosure, front and rear accessible	Transformer Yard (PKG)
2	Medium Voltage Metal Enclosed Switchgear MCDS-1 (23 kV)	SCHNEIDER ELECTRIC, SQUARE D	MASTERCLAD METAL CLAD INDOOR SWITCHGEAR MAIN GEAR CLASS 6055	FACTORY ORDER 40021516-413	600A 100KACI	23k volts, 3 phase, 3 wire Delta, ungrounded, 125kv BIL, 60 Hz, 1200A main bus, type 3R outdoor single aisle, front and rear accessible, series 5 vacum breakers 27/25kA	Transformer Yard (PKG)
3	Medium Voltage Metal Enclosed Interrupter switch TX1-MV-NOB-NE	SCHNEIDER ELECTRIC, SQUARE D	LOAD INTERRUPTOR 44036-325-50	FACTORY ORDER 40021516-506	600A	13800 volts, 3PH 3W, WYE solid ground, 15.0 kV max volt 95kV BIL 60HZ 600A coppersilver plated main bus TYPE 1 "B" enclosure	PKG MAIN SWITCHGEAR ROOM A1.420
4	Medium Voltage Metal Enclosed Interrupter switch TX1-MV-NOB-NU	SCHNEIDER ELECTRIC, SQUARE D	LOAD INTERRUPTOR 44036-325-50	FACTORY ORDER 40021516-508	600A	13800 volts, 3PH 3W, WYE solid ground, 15.0 kV max volt 95kV BIL 60HZ 600A coppersilver plated main bus TYPE 1 "B" enclosure	PKG MAIN SWITCHGEAR ROOM A1.420
5	Medium Voltage Metal Enclosed Interrupter switch TX1-MV-NOB-SE	SCHNEIDER ELECTRIC, SQUARE D	LOAD INTERRUPTOR 44036-325-50	FACTORY ORDER 40021516-507	600A	13800 volts, 3PH 3W, WYE solid ground, 15.0 kV max volt 95kV BIL 60HZ 600A coppersilver plated main bus TYPE 1 "B" enclosure	PKG MAIN SWITCHGEAR ROOM A1.420

6	Medium Voltage Metal Enclosed Interrupter switch TX1-MV-NOB-SU	SCHNEIDER ELECTRIC, SQUARE D	LOAD INTERRUPTOR 44036-325-50	FACTORY ORDER 40021516-509	600A	13800 volts, 3PH 3W, WYE solid ground, 15.0 kV max volt 95kV BIL 60HZ 600A coppersilver plated main bus TYPE 1 "B" enclosure	PKG MAIN SWITCHGEAR ROOM A1.420
7	Medium Voltage Metal Enclosed Interrupter switch TX2-MV-NOB-NE	SCHNEIDER ELECTRIC, SQUARE D	LOAD INTERRUPTOR 44036-325-50	FACTORY ORDER 40021516-418	600A	13800 volts, 3PH 3W, WYE solid ground, 15.0 kV max volt 95kV BIL 60HZ 600A coppersilver plated main bus TYPE 1 "B" enclosure	NOB SWITCHGEAR ROOM C2.552
8	Medium Voltage Metal Enclosed Interrupter switch TX2-MV-NOB-NU	SCHNEIDER ELECTRIC, SQUARE D	LOAD INTERRUPTOR 44036-325-50	FACTORY ORDER 40021516-416	600A	13800 volts, 3PH 3W, WYE solid ground, 15.0 kV max volt 95kV BIL 60HZ 600A coppersilver plated main bus TYPE 1 "B" enclosure	NOB SWITCHGEAR ROOM C2.552
9	Medium Voltage Metal Enclosed Interrupter switch TX2-MV-NOB-SE	SCHNEIDER ELECTRIC, SQUARE D	LOAD INTERRUPTOR 44036-325-50	FACTORY ORDER 40021516-510	600A	13800 volts, 3PH 3W, WYE solid ground, 15.0 kV max volt 95kV BIL 60HZ 600A coppersilver plated main bus TYPE 1 "B" enclosure	NOB SWITCHGEAR ROOM C2.300
10	Medium Voltage Metal Enclosed Interrupter switch TX2-MV-NOB-SU	SCHNEIDER ELECTRIC, SQUARE D	LOAD INTERRUPTOR 44036-325-50	FACTORY ORDER 40021516-511	600A	13800 volts, 3PH 3W, WYE solid ground, 15.0 kV max volt 95kV BIL 60HZ 600A coppersilver plated main bus TYPE 1 "B" enclosure	NOB SWITCHGEAR ROOM C2.300

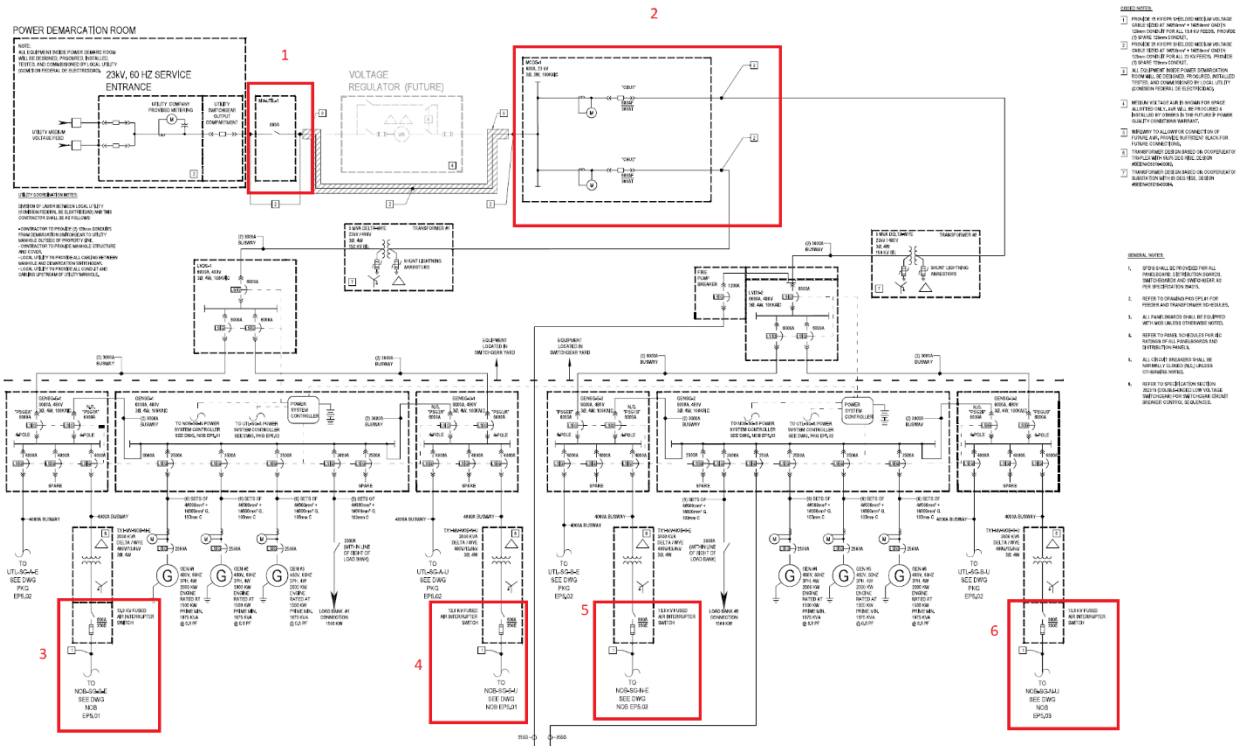
POWER DEMARCATION ROOM
23kV, 60 HZ SERVICE ENTRANCE
VOLTAGE REGULATOR (FUTURE)
1
2
3
4
5
6

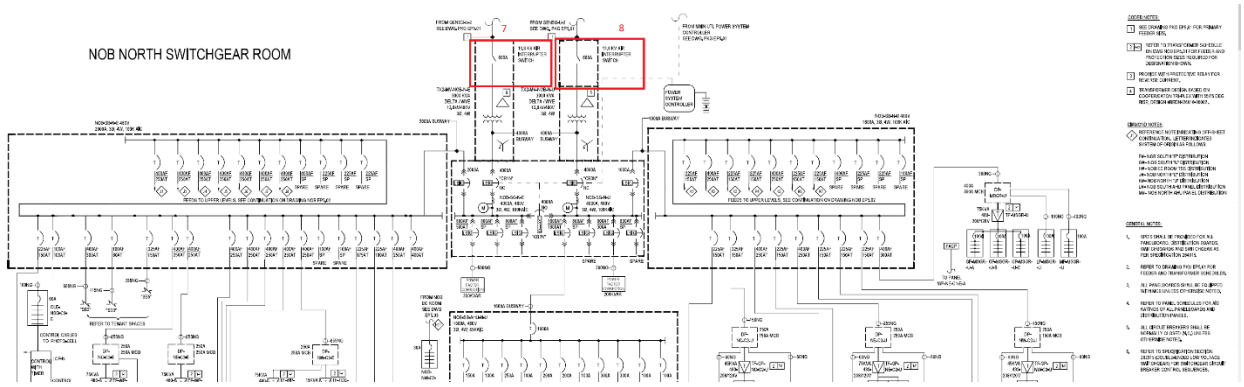
NOB NORTH SWITCHGEAR ROOM
7
8

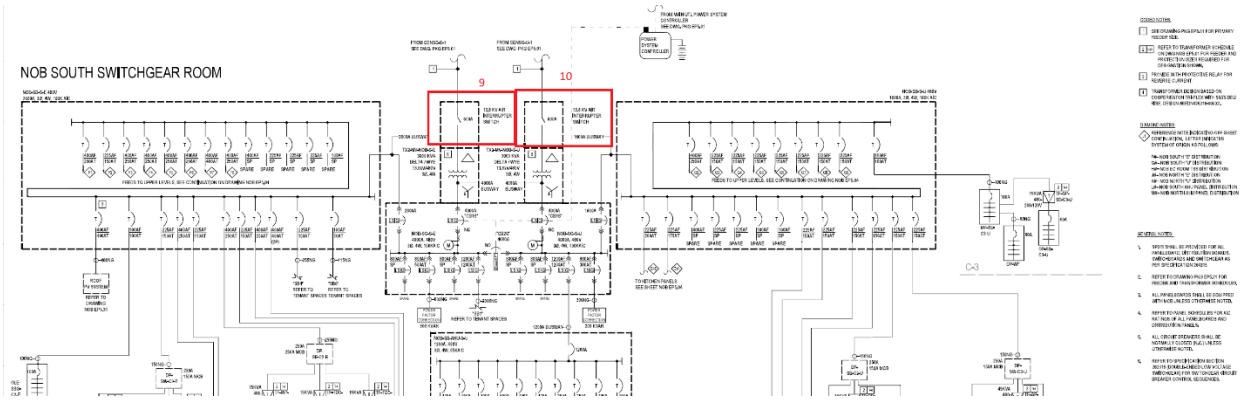

Attachment B - Statement of Work <u>Transformers</u>

I. GENERAL INFORMATION:

The United States Embassy in Mexico City requires professional services and contractor cost proposals to perform preventive maintenance services of the facility's MV transformers.

II. PROJECT REQUIREMENTS:

The Contractor shall perform preventive maintenance as described in this STATEMENT OF WORK. The objective of scheduled preventive maintenance is to eliminate system malfunction, breakdown and deterioration when unit is activated/running.

DESCRIPTION OF EQUIPMENT *:
**Please see attachment at the end of this sheet for more details*

III. GENERAL REQUIREMENTS:

The contractor shall provide the labor and materials required to carry out all preventive maintenance as outlined in this SOW. Embassy staff have service manuals for switchgears(s) on-site. The contractor shall confirm on-site manuals are complete and current. The contractor shall provide the Contracting Officer's Representative (COR) a listing of any missing or out of date manuals.

IV. SCOPE OF WORK – TRANSFORMERS PREVENTIVE MAINTENANCE

The contractor shall provide all materials, supervision, labor, tools, and equipment to perform preventive maintenance. All personnel working in the vicinity shall wear and /or use appropriate safety protection while work is performed. Any questions or injuries **<u>shall</u>** be brought to the attention of the Post COR and Occupation Safety and Health Officer (POSHO). Material Safety Data Sheets (MSDS) shall be provided by the contractor for all HAZMAT materials. Copies will be provided to the COR for approval.

The contractor shall provide the COR with a list of necessary parts and materials. Lubricants, fuses, and preventive maintenance parts shall be provided at the expense of the U.S. Govt. Only fluids which meet or exceed manufacturer's specifications shall be used.

If any discrepancies are found with the transformers that are not covered under this scope of work, the contractor shall provide the following:

4. Detailed report noting the discrepancy found.
5. Bill of Materials (BOM) to include component name, quantity, part #, and price for any repair material required and material lead time.
6. Price quote for repair labor.

SAFETY & SPECIAL INSTRUCTIONS:

9. Use appropriate personal protective equipment (PPE) when performing work
10. Check all work areas, tools, and equipment to ensure unsafe conditions are eliminated or guarded against.
11. Follow site safety procedures.
12. Schedule maintenance with operating personnel and affected offices (security).
13. Follow approved lockout/tag out procedures in order to avoid the hazard of electrical shock, which could result in serious personal injury or death.
14. Review and follow the manufacturer's instructions.
15. Record results in the equipment history log.
16. Report all incidents and near miss incidents to COR and assist as requested in the investigation and corrective action.

At a minimum, the following work shall be completed:

Notes:

- Contractor shall submit to the COR for review, work sheet/checklist that will be used for performing maintenance service.
- A discrepancy report shall be submitted to the COR immediately upon discovery of any condition that could result in equipment failure.
- Test and inspection report shall be submitted to the COR within three days of completing work.

Maintenance Interval Schedule

The purpose of this Statement of Work is to ensure the transformers for this facility is maintained according to manufacturer's recommendations to ensure the readiness and proper operation.

MAINTENANCE PROCEDURES:

Oil-Filled Transformers:

Semi-Annually

1. Check and record the transformer oil level when this information is available on the exterior of the transformer.
2. Look for signs of leakage or damage. Notify the FM immediately of any leakage problems found.
3. Wipe all oil from the transformer casing.
4. Visually inspect the transformer for signs of overheating.
5. Check spacing and rigidity of conductors.
6. Check that cooling fans attached externally are properly working.
7. Test operation of any temperature alarm or trips.
8. Ensure proper system operation and work acceptance prior to leaving site.
9. Provide a narrative summary of all findings, and conditions.

10. Provide the Post Facility Manager with a Bill of Materials (BOM) noting any required or suggested material replacements not presently onsite, along with the item's part number, unit price, and availability.
11. Provide the following required deliverables: a complete list of all transformer spares onsite; a narrative summary of all findings, repairs, conditions, and readings.

Annually:

1. Coordinate site visit service dates with the embassy Facility Manager. Pre-arrange a switch over to maintenance bypass, or static bypass.
2. Open the transformer covers and complete an infrared inspection. Make sure the transformer is at least 40% loaded and has warmed up before doing this inspection. Fix any problems you find after the transformer is de- energized.
3. Perform Lock-out/Tag-out the transformer input power and verify a de-energized and safe working condition prior to accessing internal transformer components. Provide a Lock-out/Tag-out SOP noting power isolation points and isolation steps in the final report.
4. Examine the condition of the mounting and support members.
5. Clean the transformer thoroughly. Clean the interior with a vacuum cleaner and rags.
6. Check the transformer electrical grounding conductor.
7. Inspect accessible insulators for chips, cracks, or fractures.
8. Clean accessible insulators according to the manufacturer's instructions. Use a clean damp cloth. Never use water, caustic solutions or abrasives such as steel wool. Never use a wire brush. When cleaned, polish the insulators with a soft cloth or lamb
9. Take an oil sample and send it to a qualified testing laboratory for analysis.
10. Look for leaks and check the transformer oil level and oil reservoir. Notify the FM immediately of any leakage problems found. Sealed oil filled transformers with internal open space should be purged and left with an inert gas (nitrogen ultra high purity)
11. Tighten all connections.
12. Remove rust spots from body, caps and flanges by sanding. Prime bare metal with a rust inhibitor primer before you paint it. Never use aluminum or copper base paints or primers.
13. Inspect the transformer disconnects for damage and condition of contact surfaces.
14. Check the operation of all cooling equipment such as fans or pumps, etc.
15. Check the operation of temperature and overpressure pressure alarms. Check all electrical interlocks.
16. Check the transformer conductors for signs of overheating or arcing. Tighten the connections with a torque wrench to the manufacturer's specifications.
17. Clean all oil, dirt and grime from exterior surfaces.
18. Perform an insulation resistance Test.
19. Perform a power factor test.
20. Perform a high potential test at no more than 60 percent of the test voltage for a new transformer. Follow the rules in ANSI C57.1290. Test primary to secondary and ground, and secondary to primary and ground.
21. Remove tags and lock, return circuit to service.
22. With unit loaded re-accomplish infrared checks on any problem areas.
23. Perform all function tests **(REPO, Over/Under Voltage)** and calibrate unit.
24. Restore the transformer to its online condition. If any discrepancies remain, which prohibit the unit from supporting the load, the contractor's technician must notify the COR and post FM of these discrepancies and the units bypass condition immediately. Ensure proper system operation and work acceptance prior to leaving site.

25. Test all transformer alarms and remote alarm panels.
26. Provide a narrative summary of all findings, and conditions. Include all input and output voltage, amperage, and frequency readings.
27. Provide the Post Facility Manager with a Bill of Materials (BOM) noting any required or suggested material replacements not presently onsite, along with the item's part number, unit price, and availability.
28. Provide the following required deliverables: a complete list of all transformer spares onsite; a narrative summary of all findings, repairs, conditions, and readings.

Spare Parts and Expendables Inventory. […]

Equipment List:

Equipment	Manufacturer	Model	Serial Number	Specifications	Location
5 MVA TRANSFORMER #1	EATON	CA202003EN	0002KA68X2HA	3PH PADMOUNT COMPARTMENTAL TYPE TRANSFORMER OIL FILLED 60HZ 5000KVA HV 23KV LV 480/277 V 6.49%IZ	UTILITY BUILDING LEVEL A0, TRANSFORMER YARD
5 MVA TRANSFORMER #2	EATON	CA202003EN	0002KA68X2HA	3PH PADMOUNT COMPARTMENTAL TYPE TRANSFORMER OIL FILLED 60HZ 5000KVA HV 23KV LV 480/277 V 6.49%IZ	UTILITY BUILDING LEVEL A0, TRANSFORMER YARD
TRANSFORMER TX1-MV-NOB-N-E	EATON	Cooper Power Series. Triplex Indoor-Powercenter (Step UP transformers)	Triplex OOOOBA70FMMA single XFO OOOOBA24EMLA	(Qty 3)1000-1220 kVA 1 Phase PEAK Substation Transformer, liquid filled step UP (3000-3660KVA Triplex Indoor Power Center) 13800Y/7970 High Voltage 480Delta Low Voltage	PKG MAIN SWITCHGEAR ROOM A1.420
TRANSFORMER TX1-MV-NOB-N-U	EATON	Cooper Power Series. Triplex Indoor-Powercenter (Step UP transformers)	Triplex OOOOBA70FMMA single XFO OOOOBA24EMLA	(Qty 3)1000-1220 kVA 1 Phase PEAK Substation Transformer, liquid filled step UP (3000-3660KVA Triplex Indoor Power Center) 13800Y/7970 High Voltage 480Delta Low Voltage	PKG MAIN SWITCHGEAR ROOM A1.420

TRANSFORMER TX1-MV-NOB-S-E	EATON	Cooper Power Series. Triplex Indoor-Powercenter (Step UP transformers)	Triplex OOOOBA70FMMA single XFO OOOOBA24EMLA	(Qty 3)1000-1220 kVA 1 Phase PEAK Substation Transformer, liquid filled step UP (3000-3660KVA Triplex Indoor Power Center) 13800Y/7970 High Voltage 480Delta Low Voltage	PKG MAIN SWITCHGEAR ROOM A1.420
TRANSFORMER TX1-MV-NOB-S-U	EATON	Cooper Power Series. Triplex Indoor-Powercenter (Step UP transformers)	Triplex OOOOBA70FMMA single XFO OOOOBA24EMLA	(Qty 3)1000-1220 kVA 1 Phase PEAK Substation Transformer, liquid filled step UP (3000-3660KVA Triplex Indoor Power Center) 13800Y/7970 High Voltage 480Delta Low Voltage	PKG MAIN SWITCHGEAR ROOM A1.420
TRANSFORMER TX2-MV-NOB-N-U	EATON	Cooper Power Series. Triplex Indoor-Powercenter (Step DOWN transformers)	Triplex OOOOBA70FJYA single XFO OOOOBA24E3DA	(Qty 3)1000-1220 kVA 1 Phase PEAK Substation Transformer, liquid filled step DOWN (3000-3660KVA Triplex Indoor Power Center) 13800Y/7970 High Voltage 480 Low Voltage	NOB SWITCHGEAR ROOM C2.551
TRANSFORMER TX2-MV-NOB-N-E	EATON	Cooper Power Series. Triplex Indoor-Powercenter (Step DOWN transformers)	Triplex OOOOBA70FJYA single XFO OOOOBA24E3DA	(Qty 3)1000-1220 kVA 1 Phase PEAK Substation Transformer, liquid filled step DOWN (3000-3660KVA Triplex Indoor Power Center) 13800Y/7970 High Voltage 480 Low Voltage	NOB SWITCHGEAR ROOM C2.552
TRANSFORMER TX2-MV-NOB-S-E	EATON	Cooper Power Series. Triplex Indoor-Powercenter (Step DOWN transformers)	Triplex OOOOBA70FJYA single XFO OOOOBA24E3DA	(Qty 3)1000-1220 kVA 1 Phase PEAK Substation Transformer, liquid filled step DOWN (3000-3660KVA Triplex Indoor Power Center) 13800Y/7970 High Voltage 480 Low Voltage	NOB SWITCHGEAR ROOM C2.300
TRANSFORMER TX2-MV-NOB-S-U	EATON	Cooper Power Series. Triplex Indoor-Powercenter (Step DOWN transformers)	Triplex OOOOBA70FJYA single XFO OOOOBA24E3DA	(Qty 3)1000-1220 kVA 1 Phase PEAK Substation Transformer, liquid filled step DOWN (3000-3660KVA Triplex Indoor Power Center) 13800Y/7970 High Voltage 480 Low Voltage	NOB SWITCHGEAR ROOM C2.300

Attachment C - Payment Registration Form – Pesos

Company Information

New Registration of Account ☐ Change of Account ☐

Fiscal Name of the account holder _____
RFC (for Mexican Companies) _____
Name - Point of Contact _____
Telephone Number(s) _____
E-mail Address _____
Company Address _____
_____
_____
_____

Bank information needed for EFT transfers in Pesos, Mexican Currency.

BANK INFORMATION
Bank Name _____
CLABE Interbancaria (18 digits) _____
Currency of Account MXN

If it is a collection account, please include the reference number:

Numeric reference: _____
Alphanumeric reference: _____

_____ _____
Signature Date

FMC approval _____

Note to Offeror: This form has to be signed and attached in PDF format.

Attachment D - Payment Registration– USD to a bank in the United States

Company Information

New Registration of Account ☐ Change of Account ☐

Name of the account holder _____
Name - Point of Contact _____
Telephone Number _____
E-mail Address _____
Address _____
_____
UEI _____
Contractor US Tax ID _____

Bank information needed for EFT transfers in U.S. Dollars to a Bank in the United States

BANK INFORMATION _____
Bank Name _____
Bank Routing Number
(must be 9 digits beginning with a 0,1,2 or 3) _____
Account Number _____
Currency of Account USD

_____ _____
Signature Date

FMC approval _____

Note to Offeror: This form has to be signed and attached in PDF format.

Attachment E - Payment Registration– USD to a bank in Mexico

Company Information

New Registration of Account ☐ Change of Account ☐

Name of the account holder _____

RFC (for Mexican Companies) _____

Name - Point of Contact _____

Telephone Number _____

E-mail Address _____

Address _____

_____

_____

UEI _____

Bank information needed for EFT transfers in U.S. Dollars to a U.S. Dollar Bank Account in Mexico.

BANK INFORMATION _____

Bank Name _____

SWIFT Bank Mexico (Different from SWIFT Intermediate Bank) _____

CLABE Interbancaria (18 digits) _____

Currency of Account USD

INTERMEDIATE BANK INFORMATION _____

Bank Name _____

SWIFT Intermediate Bank (Different from SWIFT Bank Mexico) _____

_____ _____

Signature Date

FMC approval _____

Note to Offeror: This form has to be signed and attached in PDF format.

Attachment F – Vendor Portal Registration

Attachments are included as separate files as part of the Solicitation Package.

Attachment G– Safety Plan

Safety plan
template - Contractc

SECTION 2 - CONTRACT CLAUSES

52.212-4 Terms and Conditions—Commercial Products and Commercial Services.

Terms and Conditions—Commercial Products and Commercial Services (Deviation Date)

(a) *Definitions*. The clause at Federal Acquisition Regulation (FAR) 52.202-1, Definitions, is incorporated by reference.

(b) *Inspection/Acceptance*. The Contractor shall only tender for acceptance those items that conform to the requirements of this contract. The Government reserves the right to inspect or test any supplies or services that have been tendered for acceptance. The Government may require repair or replacement of nonconforming supplies or reperformance of nonconforming services at no increase in contract price. If repair/replacement or reperformance will not correct the defects or is not possible, the Government may seek an equitable price reduction or adequate consideration for acceptance of nonconforming supplies or services. The Government must exercise its post acceptance rights—

(1) Within a reasonable time after the defect was discovered or should have been discovered; and
(2) Before any substantial change occurs in the condition of the item, unless the change is due to the defect in the item.

(c) *Assignment*. The Contractor or its assignee may assign its rights to receive payment due as a result of performance of this contract to a bank, trust company, or other financing institution, including any Federal lending agency in accordance with the Assignment of Claims Act (31 U.S.C. 3727). However, when a third party makes payment (*e.g.,* use of the Governmentwide commercial purchase card), the Contractor may not assign its rights to receive payment under this contract.

(d) *Changes*. Changes in the terms and conditions of this contract may be made only by written agreement of the parties.

(e) *Disputes*. This contract is subject to 41 U.S.C. chapter 71, Contract Disputes. Failure of the parties to this contract to reach agreement on any request for equitable adjustment, claim, appeal, or action arising under or relating to this contract shall be a dispute to be resolved in accordance with the clause FAR 52.233-1, Disputes, which is incorporated in this contract by reference. The Contractor shall proceed diligently with performance of this contract, pending final resolution of any dispute arising under the contract.

(f) *Excusable delays*. The Contractor shall be liable for default unless nonperformance is caused by an occurrence beyond the reasonable control of the Contractor and without its fault or negligence. Examples of occurrences include acts of God or the public enemy, acts of the Government in either its sovereign or contractual capacity, fires, floods, epidemics, quarantine restrictions, strikes, unusually severe weather, and delays of common carriers. When an excusable delay occurs, the Contractor shall—
(1) Notify the Contracting Officer in writing as soon as possible;

(2) Remedy the delay as quickly as possible; and
(3) Notify the Contracting Officer when the occurrence is over.

(g) Invoice. The Government will handle invoices according to the Prompt Payment Act (31 U.S.C. 3903) and 5 CFR part 1315. The Contractor shall submit invoices to the address designated in the contract to receive invoices. An invoice must include the information required by 5 CFR part 1315.9(b).

(h) *Patent indemnity*. The Contractor shall indemnify the Government and its officers, employees, and agents against liability, including costs, for actual or alleged direct or contributory infringement of, or inducement to infringe, any United States or foreign patent, trademark, or copyright, arising out of the performance of this contract, provided the Contractor is reasonably notified of such claims and proceedings.

(i) *Payment*—
(1) *Items accepted*. Payment shall be made for items accepted by the Government that have been delivered to the delivery destinations set forth in this contract.
(2) *Prompt payment*. The Government will make payment in accordance with the Prompt Payment Act (31 U.S.C. 3903) and prompt payment regulations at 5 CFR part 1315.
(3) *Discount*. In connection with any discount offered for early payment, time shall be computed from the date of the invoice. For the purpose of computing the discount earned, payment shall be considered to have been made on the date that appears on the payment check or the specified payment date if an electronic funds transfer payment is made.
(4) *Overpayments*. If the Contractor becomes aware of a duplicate contract financing or invoice payment or that the Government has otherwise overpaid on a contract financing or invoice payment, the Contractor shall—
(i) Remit the overpayment amount to the payment office cited in the contract along with a description of the overpayment including the—
(A) Circumstances of the overpayment (*e.g.*, duplicate payment, erroneous payment, liquidation errors, date(s) of overpayment);
(B) Affected contract number and delivery order number, if applicable;
(C) Affected line item or subline item, if applicable;
(D) Contractor point of contact; and
(ii) Provide a copy of the remittance and supporting documentation to the Contracting Officer.

(5) *Interest*.
(i) All amounts that become payable by the Contractor to the Government under this contract shall bear simple interest from the date due until paid unless paid within 30 days of becoming due. The interest rate shall be the interest rate established by the Secretary of the Treasury as provided in 41 U.S.C. 7109, which is applicable to the period in which the amount becomes due, as provided in (i)(6)(v) of this clause, and then at the rate applicable for each six-month period as fixed by the Secretary until the amount is paid.
(ii) The Government may issue a demand for payment to the Contractor upon finding a debt is due under the contract.
(iii) *Final decisions*. The Contracting Officer will issue a final decision as required by FAR part 33 if–

(A) The Contracting Officer and the Contractor are unable to reach agreement on the existence or amount of a debt within 30 days;
(B) The Contractor fails to liquidate a debt previously demanded by the Contracting Officer within the timeline specified in the demand for payment unless the amounts were not repaid because the Contractor has requested an installment payment agreement; or
(C) The Contractor requests a deferment of collection on a debt previously demanded by the Contracting Officer (see FAR part 32).
(iv) If a demand for payment was previously issued for the debt, the demand for payment included in the final decision shall identify the same due date as the original demand for payment.
(v) Amounts shall be due at the earliest of the following dates:
(A) The date fixed under this contract.
(B) The date of the first written demand for payment, including any demand for payment resulting from a termination for cause.
(vi) The interest charge shall be computed for the actual number of calendar days involved beginning on the due date and ending on-
(A) The date on which the designated office receives payment from the Contractor;
(B) The date of issuance of a Government check to the Contractor from which an amount otherwise payable has been withheld as a credit against the contract debt; or
(C) The date on which an amount withheld and applied to the contract debt would otherwise have become payable to the Contractor.
(vii) The interest charge made under this clause may be reduced under the procedures for interest credits prescribed in FAR part 32 in effect on the date of this contract.

(j) *Risk of loss*. Unless the contract specifically provides otherwise, risk of loss or damage to the supplies provided under this contract shall remain with the Contractor until, and shall pass to the Government upon—
(1) Delivery of the supplies to a carrier, if transportation is f.o.b. origin; or
(2) Delivery of the supplies to the Government at the destination specified in the contract, if transportation is f.o.b. destination.

(k) *Taxes*. The contract price includes all applicable Federal, State, and local taxes and duties.

(l) *Termination for the Government's convenience*. The Government reserves the right to terminate this contract, or any part hereof, for its sole convenience. In the event of such termination, the Contractor shall immediately stop all work and shall immediately cause any and all of its suppliers and subcontractors to cease work. Subject to the terms of this contract, the Contractor shall be paid a percentage of the contract price reflecting the percentage of the work performed prior to the notice of termination, plus reasonable charges the Contractor can demonstrate to the satisfaction of the Government using its standard record keeping system, have resulted from the termination. The Contractor shall not be required to comply with the cost accounting standards or contract cost principles for this purpose. This paragraph does not give the Government any right to audit the Contractor's records. The Contractor shall not be paid for any work performed or costs incurred which reasonably could have been avoided.

(m) *Termination for cause*. The Government may terminate this contract, or any part hereof, for cause in the event of any default by the Contractor, or if the Contractor fails to comply with any

contract terms and conditions, or fails to provide the Government, upon request, with adequate assurances of future performance. The Government will send a cure notice to the Contractor, unless the reason for the termination is late delivery. In the event of termination for cause, the Government shall not be liable to the Contractor for any amount for supplies or services not accepted, and the Contractor shall be liable to the Government for any and all rights and remedies provided by law. If it is determined that the Government improperly terminated this contract for default, such termination shall be deemed a termination for convenience.

(n) *Title*. Unless specified elsewhere in this contract, title to items furnished under this contract shall pass to the Government upon acceptance, regardless of when or where the Government takes physical possession.

(o) *Warranty*. The Contractor warrants and implies that the items delivered under this contract are merchantable and fit for use for the particular purpose described in this contract.

(p) *Limitation of liability*. Except as otherwise provided by an express warranty, the Contractor will not be liable to the Government for consequential damages resulting from any defect or deficiencies in accepted items.

(q) *Compliance with laws unique to Government contracts*. The Contractor agrees to comply with 31 U.S.C. 1352 relating to limitations on the use of appropriated funds to influence certain Federal contracts; 40 U.S.C. chapter 37, Contract Work Hours and Safety Standards; 41 U.S.C. chapter 87, Kickbacks; 49 U.S.C. 40118, Government-financed air transportation; and 41 U.S.C. chapter 21 relating to procurement integrity.

(r) *Order of precedence*. Any inconsistencies in this solicitation or contract shall be resolved by giving precedence in the following order:
(1) The schedule of supplies/services;
(2) The Disputes, Payments, Invoice, Compliance with Laws Unique to Government Contracts, and Unauthorized Obligations paragraphs of this clause;
(3) Other contract clauses incorporated in the solicitation or contract;
(4) Addenda to this solicitation or contract;
(5) Solicitation provisions incorporated in the solicitation;
(6) Other paragraphs of this clause;
(7) Other documents, exhibits, and attachments; and
(8) The specification.

(s) *Unauthorized obligations*.
(1) Except as stated in paragraph (s)(2) of this clause, when any supply or service acquired under this contract is subject to any End User License Agreement (EULA), Terms of Service (TOS), or similar legal instrument or agreement, that includes any clause requiring the Government to indemnify the Contractor or any person or entity for damages, costs, fees, or any other loss or liability that would create an Anti-Deficiency Act violation (31 U.S.C. 1341), the following shall govern:
(i) Any such clause is unenforceable against the Government.

(ii) Neither the Government nor any Government-authorized end user shall be deemed to have agreed to such clause by virtue of it appearing in the EULA, TOS, or similar legal instrument or agreement. If the EULA, TOS, or similar legal instrument or agreement is invoked through an "I agree" click box or other comparable mechanism (e.g., "click-wrap" or "browse-wrap" agreements), execution does not bind the Government or any Government authorized end user to such clause.
(iii) Any such clause is deemed to be stricken from the EULA, TOS, or similar legal instrument or agreement.
(2) Paragraph (s)(1) of this clause does not apply to indemnification by the Government that is expressly authorized by statute and specifically authorized under applicable agency regulations and procedures.

(t) *Comptroller General examination of record*. This paragraph applies if this contract was awarded using other than sealed bid procedures and is in excess of the simplified acquisition threshold on the date of award of this contract.
(1) The Comptroller General of the United States, or an authorized representative of the Comptroller General, shall have access to and right to examine any of the Contractor's directly pertinent records involving transactions related to this contract.
(2) The Contractor shall make available at its offices, at all reasonable times, the records, materials, and other evidence for examination, audit, or reproduction, until 3 years after final payment under this contract or for any shorter period specified in FAR part 4, longer period required by statute, or periods specified in other clauses of this contract. If this contract is completely or partially terminated, the records relating to the work terminated shall be made available for 3 years after any resulting final termination settlement. Records relating to appeals under the disputes clause or to litigation or the settlement of claims arising under or relating to this contract shall be made available until such appeals, litigation, or claims are finally resolved.
(3) As used in this clause, records include books, documents, accounting procedures and practices, and other data, regardless of type and regardless of form. This clause does not require the Contractor to create or maintain any record that the Contractor does not maintain in the ordinary course of business or pursuant to a provision of law.

(u) *Incorporation by reference*. The Contractor's representations and certifications, including those completed electronically via the System for Award Management (SAM), are incorporated by reference into the contract.

(End of clause)

Alternate I (Deviation Date). When contemplating a time-and-materials or labor-hour contract, substitute the following paragraphs (a), (b), (i), (l), and (m) for those in the basic clause.
(a) The clause at Federal Acquisition Regulation (FAR) 52.202-1, Definitions, is incorporated by reference. As used in this clause—
Direct materials means those materials that enter directly into the end product, or that are used or consumed directly in connection with the furnishing of the end product or service.
Hourly rate means the rate(s) prescribed in the contract for payment for labor that meets the labor category qualifications of a labor category specified in the contract that are—

(1) Performed by the contractor;
(2) Performed by the subcontractors; or
(3) Transferred between divisions, subsidiaries, or affiliates of the contractor under a common control.
Materials means—
(1) Direct materials, including supplies transferred between divisions, subsidiaries, or affiliates of the contractor under a common control;
(2) Subcontracts for supplies and incidental services for which there is not a labor category specified in the contract;
(3) Other direct costs (e.g., incidental services for which there is not a labor category specified in the contract, travel, computer usage charges, etc.);
(4) The following subcontracts for services which are specifically excluded from the hourly rate: *[Insert any subcontracts for services to be excluded from the hourly rates prescribed in the schedule.]*; and
(5) Indirect costs specifically provided for in this clause.
Subcontract means any contract, as defined in FAR 2.101, entered into with a subcontractor to furnish supplies or services for performance of the prime contract or a subcontract including transfers between divisions, subsidiaries, or affiliates of a contractor or subcontractor. It includes, but is not limited to, purchase orders, and changes and modifications to purchase orders.
(b) *Inspection/Acceptance*.
(1) The Government has the right to inspect and test all materials furnished and services performed under this contract at all places and times before acceptance. The Government will perform inspections and tests in a manner that will not unduly delay the work.
(2) If the Government performs inspection or tests on the premises of the Contractor or a subcontractor, the Contractor shall furnish and shall require subcontractors to furnish all reasonable facilities and assistance for the safe and convenient performance of these duties.
(3) Unless otherwise specified in the contract, the Government will accept or reject services and materials at the place of delivery as promptly as practicable after delivery, and they will be presumed accepted 60 days after the date of delivery, unless accepted earlier.
(4) At any time during contract performance, but not later than 6 months (or such other time as may be specified in the contract) after acceptance of the services or materials last delivered under this contract, the Government may require the Contractor to replace or correct services or materials that at time of delivery failed to meet contract requirements. Except as otherwise specified in paragraph (b)(6) of this clause, the cost of replacement or correction shall be determined under paragraph (i) of this clause, but the "hourly rate" for labor hours incurred in the replacement or correction shall be reduced to exclude that portion of the rate attributable to profit. Unless otherwise specified below, the portion of the "hourly rate" attributable to profit shall be 10 percent. The Contractor shall not tender for acceptance materials and services required to be replaced or corrected without disclosing the former requirement for replacement or correction, and, when required, shall disclose the corrective action taken. *[Insert portion of labor rate attributable to profit.]*
(5)(i) If the Contractor fails to proceed with reasonable promptness to perform required replacement or correction, and if the replacement or correction can be performed within the ceiling price (or the ceiling price as increased by the Government), the Government may—
(A) By contract or otherwise, perform the replacement or correction, charge to the Contractor any increased cost, or deduct such increased cost from any amounts paid or due under this contract; or

(B) Terminate this contract for cause.
(ii) Failure to agree to the amount of increased cost to be charged to the Contractor shall be a dispute under the Disputes clause of the contract.
(6) Notwithstanding paragraphs (b)(4) and (5) of this clause, the Government may, at any time, require the Contractor to remedy by correction or replacement, without cost to the Government, any failure by the Contractor to comply with the requirements of this contract, if the failure is due to—
(i) Fraud, lack of good faith, or willful misconduct on the part of the Contractor's managerial personnel; or
(ii) The conduct of one or more of the Contractor's employees selected or retained by the Contractor after any of the Contractor's managerial personnel has reasonable grounds to believe that the employee is habitually careless or unqualified.
(7) This clause applies in the same manner and to the same extent to corrected or replacement materials or services as to materials and services originally delivered under this contract.
(8) The Contractor has no obligation or liability under this contract to correct or replace materials and services that at time of delivery do not meet contract requirements, except as provided in this clause or as may be otherwise specified in the contract.
(9) Unless otherwise specified in the contract, the Contractor's obligation to correct or replace Government-furnished property shall be governed by the clause pertaining to Government property.
(i) *Payments*.
(1) *Work performed*. The Government will pay the Contractor as follows upon the submission of commercial invoices approved by the Contracting Officer:
(i) *Hourly rate*.
(A) The amounts shall be computed by multiplying the appropriate hourly rates prescribed in the contract by the number of direct labor hours performed. Fractional parts of an hour shall be payable on a prorated basis.
(B) The rates shall be paid for all labor performed on the contract that meets the labor qualifications specified in the contract. Labor hours incurred to perform tasks for which labor qualifications were specified in the contract will not be paid to the extent the work is performed by individuals that do not meet the qualifications specified in the contract, unless specifically authorized by the Contracting Officer.
(C) Invoices may be submitted once each month (or at more frequent intervals, if approved by the Contracting Officer) to the Contracting Officer or the authorized representative.
(D) When requested by the Contracting Officer or the authorized representative, the Contractor shall substantiate invoices (including any subcontractor hours reimbursed at the hourly rate in the schedule) by evidence of actual payment, individual daily job timecards, records that verify the employees meet the qualifications for the labor categories specified in the contract, or other substantiation specified in the contract.
(E) Unless the Schedule prescribes otherwise, the hourly rates in the Schedule shall not be varied by virtue of the Contractor having performed work on an overtime basis.
(*1*) If no overtime rates are provided in the Schedule and the Contracting Officer approves overtime work in advance, overtime rates shall be negotiated.
(*2*) Failure to agree upon these overtime rates shall be treated as a dispute under the Disputes clause of this contract.

(*3*) If the Schedule provides rates for overtime, the premium portion of those rates will be reimbursable only to the extent the overtime is approved by the Contracting Officer.
(ii) *Materials*.
(A) If the Contractor furnishes materials that meet the definition of a commercial product at FAR 2.101, the price to be paid for such materials shall not exceed the Contractor's established catalog or market price, adjusted to reflect the—
(*1*) Quantities being acquired; and
(*2*) Any modifications necessary because of contract requirements.
(B) Except as provided for in paragraph (i)(1)(ii)(A) and (D)(2) of this clause, the Government will reimburse the Contractor the actual cost of materials (less any rebates, refunds, or discounts received by the contractor that are identifiable to the contract) provided the Contractor—
(*1*) Has made payments for materials in accordance with the terms and conditions of the agreement or invoice; or
(*2*) Makes these payments within 30 days of the submission of the Contractor's payment request to the Government and such payment is in accordance with the terms and conditions of the agreement or invoice.
(C) To the extent able, the Contractor shall—
(*1*) Obtain materials at the most advantageous prices available with due regard to securing prompt delivery of satisfactory materials; and
(*2*) Give credit to the Government for cash and trade discounts, rebates, scrap, commissions, and other amounts that are identifiable to the contract.
(D) Unless listed below, other direct and indirect costs will not be reimbursed.
(*1*) *Other direct costs*. The Government will reimburse the Contractor on the basis of actual cost for the following, provided such costs comply with the requirements in paragraph (i)(1)(ii)(B) of this clause: *None*
(*2) Indirect costs (material handling, subcontract administration, etc.)*. The Government will reimburse the Contractor for indirect costs on a pro-rata basis over the period of contract performance at the following fixed price: *None*
(2) *Total cost*. The total cost to the Government for the performance of this contract shall not exceed the ceiling price set forth in the Schedule. The Contractor agrees to use its best efforts to perform the work specified in the Schedule and all obligations under this contract within such ceiling price. If at any time the Contractor has reason to believe that the hourly rate payments and material costs that will accrue in performing this contract in the next succeeding 30 days, if added to all other payments and costs previously accrued, will exceed 85 percent of the ceiling price in the Schedule, the Contractor shall notify the Contracting Officer giving a revised estimate of the total price to the Government for performing this contract with supporting reasons and documentation. If at any time during the performance of this contract, the Contractor has reason to believe that the total price to the Government for performing this contract will be substantially greater or less than the stated ceiling price, the Contractor shall so notify the Contracting Officer, giving a revised estimate of the total price for performing this contract, with supporting reasons and documentation. If at any time during performance of this contract, the Government has reason to believe that the work to be required in performing this contract will be substantially greater or less than the stated ceiling price, the Contracting Officer will so advise the Contractor, giving the revised estimate of the total amount of effort to be required under the contract.
(3) *Ceiling price*. The Government will not be obligated to pay the Contractor any amount in excess of the ceiling price in the Schedule, and the Contractor shall not be obligated to continue

performance if to do so would exceed the ceiling price set forth in the Schedule, unless and until the Contracting Officer notifies the Contractor in writing that the ceiling price has been increased and specifies in the notice a revised ceiling that shall constitute the ceiling price for performance under this contract. When and to the extent that the ceiling price set forth in the Schedule has been increased, any hours expended and material costs incurred by the Contractor in excess of the ceiling price before the increase shall be allowable to the same extent as if the hours expended and material costs had been incurred after the increase in the ceiling price.

(4) *Access to records*. At any time before final payment under this contract, the Contracting Officer (or authorized representative) will have access to the following (access shall be limited to the listing below unless otherwise agreed to by the Contractor and the Contracting Officer):

(i) Records that verify that the employees whose time has been included in any invoice meet the qualifications for the labor categories specified in the contract;

(ii) For labor hours (including any subcontractor hours reimbursed at the hourly rate in the schedule), when timecards are required as substantiation for payment—

(A) The original timecards (paper-based or electronic);

(B) The Contractor's timekeeping procedures;

(C) Contractor records that show the distribution of labor between jobs or contracts; and

(D) Employees whose time has been included in any invoice for the purpose of verifying that these employees have worked the hours shown on the invoices.

(iii) For material and subcontract costs that are reimbursed on the basis of actual cost—

(A) Any invoices or subcontract agreements substantiating material costs; and

(B) Any documents supporting payment of those invoices.

(5) *Overpayments/Underpayments*. Each payment previously made shall be subject to reduction to the extent of amounts, on preceding invoices, that are found by the Contracting Officer not to have been properly payable and shall also be subject to reduction for overpayments or to increase for underpayments. The Contractor shall promptly pay any such reduction within 30 days unless the parties agree otherwise. The Government will pay any such increases within 30 days, unless the parties agree otherwise. The Contractor's payment will be made by check. If the Contractor becomes aware of a duplicate invoice payment or that the Government has otherwise overpaid on an invoice payment, the Contractor shall—

(i) Remit the overpayment amount to the payment office cited in the contract along with a description of the overpayment including the—

(A) Circumstances of the overpayment (e.g., duplicate payment, erroneous payment, liquidation errors, date(s) of overpayment);

(B) Affected contract number and delivery order number, if applicable;

(C) Affected line item or subline item, if applicable; and

(D) Contractor point of contact.

(ii) Provide a copy of the remittance and supporting documentation to the Contracting Officer.

(6) *Interest*.

(i) All amounts that become payable by the Contractor to the Government under this contract shall bear simple interest from the date due until paid unless paid within 30 days of becoming due. The interest rate shall be the interest rate established by the Secretary of the Treasury, as provided in 41 U.S.C. 7109, which is applicable to the period in which the amount becomes due, and then at the rate applicable for each six-month period as established by the Secretary until the amount is paid.

(ii) The Government may issue a demand for payment to the Contractor upon finding a debt is due under the contract.
(iii) The Contracting Officer will issue a final decision if—
(A) The Contracting Officer and the Contractor are unable to reach agreement on the existence or amount of a debt in a timely manner;
(B) The Contractor fails to liquidate a debt previously demanded by the Contracting Officer within the timeline specified in the demand for payment unless the amounts were not repaid because the Contractor has requested an installment payment agreement; or
(C) The Contractor requests a deferment of collection on a debt previously demanded by the Contracting Officer.
(iv) If a demand for payment was previously issued for the debt, the demand for payment included in the final decision shall identify the same due date as the original demand for payment.
(v) Amounts shall be due at the earliest of the following dates:
(A) The date fixed under this contract.
(B) The date of the first written demand for payment, including any demand for payment resulting from a default termination.
(vi) The interest charge shall be computed for the actual number of calendar days involved beginning on the due date and ending on—
(A) The date on which the designated office receives payment from the Contractor;
(B) The date of issuance of a Government check to the Contractor from which an amount otherwise payable has been withheld as a credit against the contract debt; or
(C) The date on which an amount withheld and applied to the contract debt would otherwise have become payable to the Contractor.
(vii) The interest charge made under this clause may be reduced under the procedures prescribed in FAR part 32 in effect on the date of this contract.
(viii) Upon receipt and approval of the invoice designated by the Contractor as the "completion invoice" and supporting documentation, and upon compliance by the Contractor with all terms of this contract, any outstanding balances will be paid within 30 days unless the parties agree otherwise. The completion invoice, and supporting documentation, shall be submitted by the Contractor as promptly as practicable following completion of the work under this contract, but in no event later than 1 year (or such longer period as the Contracting Officer may approve in writing) from the date of completion.
(7) *Release of claims*. The Contractor, and each assignee under an assignment entered into under this contract and in effect at the time of final payment under this contract, shall execute and deliver, at the time of and as a condition precedent to final payment under this contract, a release discharging the Government, its officers, agents, and employees of and from all liabilities, obligations, and claims arising out of or under this contract, subject only to the following exceptions:
(i) Specified claims in stated amounts, or in estimated amounts if the amounts are not susceptible to exact statement by the Contractor.
(ii) Claims, together with reasonable incidental expenses, based upon the liabilities of the Contractor to third parties arising out of performing this contract, that are not known to the Contractor on the date of the execution of the release, and of which the Contractor gives notice in writing to the Contracting Officer not more than 6 years after the date of the release or the date of any notice to the Contractor that the Government is prepared to make final payment, whichever is earlier.

(iii) Claims for reimbursement of costs (other than expenses of the Contractor by reason of its indemnification of the Government against patent liability), including reasonable incidental expenses, incurred by the Contractor under the terms of this contract relating to patents.
(8) *Prompt payment*. The Government will make payment in accordance with the Prompt Payment Act (31 U.S.C. 3903) and prompt payment regulations at 5 CFR part 1315.
(9) Discount. In connection with any discount offered for early payment, time shall be computed from the date of the invoice. For the purpose of computing the discount earned, payment shall be considered to have been made on the date that appears on the payment check or the specified payment date if an electronic funds transfer payment is made.
(l) *Termination for the Government's convenience*. The Government reserves the right to terminate this contract, or any part hereof, for its sole convenience. In the event of such termination, the Contractor shall immediately stop all work under this contract and shall immediately cause any and all of its suppliers and subcontractors to cease work. Subject to the terms of this contract, the Contractor shall be paid an amount for direct labor hours (as defined in the Schedule of the contract) determined by multiplying the number of direct labor hours expended before the effective date of termination by the hourly rate(s) in the contract, less any hourly rate payments already made to the Contractor plus reasonable charges the Contractor can demonstrate to the satisfaction of the Government using its standard record keeping system that have resulted from the termination. The Contractor shall not be required to comply with the cost accounting standards or contract cost principles for this purpose. This paragraph does not give the Government any right to audit the Contractor's records. The Contractor shall not be paid for any work performed or costs incurred that reasonably could have been avoided.
(m) *Termination for cause*. The Government may terminate this contract, or any part hereof, for cause in the event of any default by the Contractor, or if the Contractor fails to comply with any contract terms and conditions, or fails to provide the Government, upon written request, with adequate assurances of future performance. The Government will send a cure notice to the Contractor, unless the reason for the termination is late delivery. Subject to the terms of this contract, the Contractor shall be paid an amount computed under paragraph (i), Payments, of this clause, but the "hourly rate" for labor hours expended in furnishing work not delivered to or accepted by the Government shall be reduced to exclude that portion of the rate attributable to profit. Unless otherwise specified in paragraph (b)(4) of this clause, the portion of the "hourly rate" attributable to profit shall be 10 percent. In the event of termination for cause, the Contractor shall be liable to the Government for any and all rights and remedies provided by law. If it is determined that the Government improperly terminated this contract for default, such termination shall be deemed a termination for convenience.

ADDENDUM TO CONTRACT CLAUSES
FAR AND DOSAR CLAUSES NOT PRESCRIBED IN PART 12

52.252-2 CLAUSES INCORPORATED BY REFERENCE (FEB 1998)

This contract incorporates one or more clauses by reference, with the same force and effect as if they were given in full text. Upon request, the Contracting Officer will make their full text available. In addition, the full text of a clause may be accessed electronically at: Acquisition.gov this address is subject to change.

If the Federal Acquisition Regulation (FAR) is not available at the location indicated above, use the Department of State Acquisition website at e-CFR to see the links to the FAR. You may also use an Internet "search engine" (for example, Google, Yahoo or Excite) to obtain the latest location of the most current FAR.

THE FOLLOWING FEDERAL ACQUISITION REGULATIONS (FAR) CLAUSES ARE INCORPORATED BY REFERENCE:

CLAUSE	TITLE AND DATE
52.203-17	CONTRACTOR EMPLOYEE WHISTLEBLOWER RIGHTS (NOV 2023)
52.204-9	PERSONAL IDENTITY VERIFICATION OF CONTRACTOR PERSONNEL (JAN 2011)
52.204-13	SYSTEM FOR AWARD MANAGEMENT MAINTENANCE (DEVIATION DATE)
52.204-27	PROHIBITION ON A BYTEDANCE COVERED APPLICATION (JUN 2023)
52.222-19	CHILD LABOR-COOPERATION WITH AUTHORITIES AND REMEDIES (DEVIATION DATE)
52.225-14	INCONSISTENCY BETWEEN ENGLISH VERSION AND TRANSLATION OF CONTRACT (FEB 2000)
52.228-4	WORKER'S COMPENSATION AND WAR-HAZARD INSURANCE OVERSEAS (APRIL 1984)
52.228-5	INSURANCE - WORK ON A GOVERNMENT INSTALLATION (JAN 1997)
52.229-6	TAXES - FOREIGN FIXED PRICE CONTRACTS (DATE)
52.232-39	UNENFORCEABILITY OF UNAUTHORIZED OBLIGATIONS (JUNE 2013)

52.232-40 PROVIDING ACCELERATED PAYMENTS TO SMALL BUSINESS SUBCONTRACTORS (MAR 2023)

52.244-6 SUBCONTRACTS FOR COMMERCIAL PRODUCTS AND COMMERCIAL SERVICES (DEVIATION DATE)

THE FOLLOWING FAR CLAUSES ARE PROVIDED IN FULL TEXT:

52.217-8 OPTION TO EXTEND SERVICES (NOV 1999)

The Government may require continued performance of any services within the limits and at the rates specified in the contract. The option provision may be exercised more than once, but the total extension of performance hereunder shall not exceed 6 months. The Contracting Officer may exercise the option by written notice to the Contractor within the performance period of the contract.

(End of clause)

52.217-9 OPTION TO EXTEND THE TERM OF THE CONTRACT (MAR 2000)

(a) The Government may extend the term of this contract by written notice to the Contractor within the performance period of the contract or within 30 days after funds for the option year become available, whichever is later.

(b) If the Government exercises this option, the extended contract shall be considered to include this option clause.

(c) The total duration of this contract, including the exercise of any options under this clause, shall not exceed four (4) years.

(End of clause)

52.232-19 AVAILABILITY OF FUNDS FOR THE NEXT FISCAL YEAR (APR 1984)

Funds are not presently available for performance under this contract beyond September 30 of the current calendar year. The Government's obligation for performance of this contract beyond that date is contingent upon the availability of appropriated funds from which payment for contract purposes can be made. No legal liability on the part of the Government for any payment may arise for performance under this contract beyond September 30 of the current calendar year, until funds are made available to the Contracting Officer for performance and until the Contractor receives notice of availability, to be confirmed in writing by the Contracting Officer.

(End of clause)

THE FOLLOWING DOSAR CLAUSES ARE PROVIDED IN FULL TEXT:

652.204-70 DEPARTMENT OF STATE PERSONAL IDENTIFICATION CARD ISSUANCE (FEB 2015)

(a) The Contractor shall comply with the Department of State (DOS) Personal Identification Card Policy and Procedures for all employees performing under this contract who require frequent and continuing access to DOS facilities, or information systems. The Contractor shall insert the substance of this clause in all subcontracts when the subcontractor's employees will require frequent and continuing access to DOS facilities, or information systems.

(b) The DOS Personal Identification Card Policy and Procedures may be accessed at *http://www.state.gov/m/ds/rls/rpt/c21664.htm*.

(End of clause)

CONTRACTOR IDENTIFICATION (JULY 2008)

Contract performance may require contractor personnel to attend meetings with government personnel and the public, work within government offices, and/or utilize government email.

Contractor personnel must take the following actions to identify themselves as non-federal employees:

1) Use an email signature block that shows name, the office being supported and company affiliation (e.g. "John Smith, Office of Human Resources, ACME Corporation Support Contractor");

2) Clearly identify themselves and their contractor affiliation in meetings;

3) Identify their contractor affiliation in Departmental e-mail and phone listings whenever contractor personnel are included in those listings; and

4) Contractor personnel may not utilize Department of State logos or indicia on business cards.

(End of clause)

652.215-70 EXAMINATION OF RECORDS

(a) With respect to matters related to this contract or a subcontract hereunder, the Department of State Office of the Inspector General, or an authorized representative, shall have upon request:
(1) Complete, prompt, and free access to all Contractor and Subcontractor files (in any format), documents, records, data, premises, and employees, except as limited by law; and

(2) The right to interview any current Contractor and Subcontractor personnel, individually and directly, with respect to such matters.

(b) This clause may not be construed to require the contractor or any subcontractor to create or maintain any record that the contractor or subcontractor does not maintain in the ordinary course of business or pursuant to a provision of law.

(c) The Contractor shall insert a clause containing all the terms of this clause, including this paragraph (c), in all subcontracts under this contract other than acquisitions described in Federal Acquisition Regulation 15.209(b)(1).

652.229-70 EXCISE TAX EXEMPTION STATEMENT FOR CONTRACTORS WITHIN THE UNITED STATES (JUL 1988)

This is to certify that the item(s) covered by this contract is/are for export solely for the use of the U.S. Foreign Service Post identified in the contract schedule.
The Contractor shall use a photocopy of this contract as evidence of intent to export. Final proof of exportation may be obtained from the agent handling the shipment. Such proof shall be accepted in lieu of payment of excise tax.

(End of clause)

652.232-70 PAYMENT SCHEDULE AND INVOICE SUBMISSION (FIXED-PRICE) (AUG 1999)

a) General

The Government shall pay the contractor as full compensation for all work required, performed, and accepted under this contract the firm fixed price stated in this contract.

b) Invoice Submission

The contractor shall submit invoices in electronic format to the office identified in Block 18b of the SF-1449. To constitute a proper invoice, the invoice shall include all the items required by FAR 52.232-25, 32.905(e), and the following minimum requirements:

1. Electronic Invoice.
2. Contractor's name and complete legal address.
3. Contractor's RFC.
4. Date issued.
5. Issue Invoice as follows:
   Embajada de los Estados Unidos de America
   Presa la Angostura No. 225,
   Colonia Irrigación,
   CDMX, C.P.11500
   RFC: EEU 930201 289.
6. Period of performance being charged.
7. Invoice Number

8. Account Number.
9. IVA broken down (if applicable).
10. Amounts shall be in numbers and spelled out.
11. Signed copy of the Maintenance Checklist for the work performed including parts replacement and break down calls, if any.

If an invoice does not contain the above information, the United States Government reserves the right to reject the invoice as improper and return it to the Contractor within 7 calendars days. The Contractor must then submit a proper invoice.

c) Invoice Submission Schedule and Instructions

The Contractor shall submit an invoice with the total amounts of services incurred within ten (10) calendar days after completing the service.

d) Address to Send Electronic Invoices

The Accounts Payable section of the U.S. Embassy has a paperless Voucher processing system known as ILMS VENDOR PORTAL. Please follow the guidelines stated in Attachment 9, to submit a payment request through the VENDOR PORTAL. Paper or emailed invoices are no longer accepted.

e) Frequency of Payments

Payment shall be made by Electronic Funds Transfer (EFT) within 30 days after receipt of the proper invoice and approval by the COR or designated GTM.

f) Contractor Remittance Address

The Government will make payment to the contractor's address stated on the cover page of this contract, unless a separate remittance address is shown below:

_____
_____
_____
_____

(End of clause)

652.237-72 OBSERVANCE OF LEGAL HOLIDAYS AND ADMINISTRATIVE LEAVE (FEB 2015)

(a) The Department of State observes the following days as holidays:

Date	Holiday	US/Local
Jan 01	New Year's Day	US
Jan 16	Birthday of Martin Luther King, Jr.	US
Feb 18	President's Day	US
May 27	Memorial Day	US
June 19	Juneteenth	US
Jul 04	Independence Day	US
Sep 02	Labor Day	US
Oct 14	Columbus Day	US
Nov 11	Veterans Day	US
Nov 28	Thanksgiving Day	US
Dec 25	Christmas	US

Below is a list of the Mexican holidays*

Date	Holiday	US/Local
Jan 01	Año Nuevo	LOC
Feb 5	Dia de la Constitución	LOC
March 21	Benito Juarez's Birthday	LOC
March 28-29	Holy week	LOC
May 1	Dia Internacional del Trabajador	LOC
May 10	Mother's day	LOC
Sept 16	Mexico's Independency day	LOC
Nov 2	Dia de Muertos	LOC
Nov 20	Revolución Mexicana	LOC
Dec 12	Dia de la Virgen de Guadalupe	LOC
Dec 25	Christmas	LOC

*Some dates could change every year. Please check with post before scheduling the visit

Any other day designated by Federal law, Executive Order, or Presidential Proclamation.

(b) When New Year's Day, Independence Day, Veterans Day or Christmas Day falls on a Sunday, the following Monday is observed; if it falls on Saturday the preceding Friday is observed. Observance of such days by Government personnel shall not be cause for additional period of performance or entitlement to compensation except as set forth in the contract. If the contractor's personnel work on a holiday, no form of holiday or other premium compensation will be reimbursed either as a direct or indirect cost, unless authorized pursuant to an overtime clause elsewhere in this contract.

(c) When the Department of State grants administrative leave to its Government employees, assigned contractor personnel in Government facilities shall also be dismissed. However, the contractor agrees to continue to provide sufficient personnel to perform round-the-clock requirements of critical tasks already in operation or scheduled, and shall be guided by the instructions issued by the contracting officer or his/her duly authorized representative.

(d) For fixed-price contracts, if services are not required or provided because the building is closed due to inclement weather, unanticipated holidays declared by the President, failure of Congress to appropriate funds, or similar reasons, deductions will be computed as follows:

(1) The deduction rate in dollars per day will be equal to the per month contract price divided by 21 days per month.

(2) The deduction rate in dollars per day will be multiplied by the number of days services are not required or provided.

If services are provided for portions of days, appropriate adjustment will be made by the contracting officer to ensure that the contractor is compensated for services provided.

(e) If administrative leave is granted to contractor personnel as a result of conditions stipulated in any "Excusable Delays" clause of this contract, it will be without loss to the contractor. The cost of salaries and wages to the contractor for the period of any such excused absence shall be a reimbursable item of direct cost hereunder for employees whose regular time is normally charged, and a reimbursable item of indirect cost for employees whose time is normally charged indirectly in accordance with the contractors accounting policy.

(End of clause)

652.242-70 CONTRACTING OFFICER'S REPRESENTATIVE (COR) AUG 1999)

(a) The Contracting Officer may designate in writing one or more Government employees, by name or position title, to take action for the Contracting Officer under this contract. Each designee shall be identified as a Contracting Officer's Representative (COR). Such designation(s) shall specify the scope and limitations of the authority so delegated; provided, that the designee shall not change the terms or conditions of the contract, unless the COR is a warranted Contracting Officer and this authority is delegated in the designation.

(a) The COR for this contract is Electrical Engineer.

(End of clause)

652.242-73 AUTHORIZATION AND PERFORMANCE (AUG 1999)

(a) The Contractor warrants the following:

(1) That is has obtained authorization to operate and do business in the country or countries in which this contract will be performed;

(2) That is has obtained all necessary licenses and permits required to perform this contract; and,

(3) That it shall comply fully with all laws, decrees, labor standards, and regulations of said country or countries during the performance of this contract.

(b) If the party actually performing the work will be a subcontractor or joint venture partner, then such subcontractor or joint venture partner agrees to the requirements of paragraph (a) of this clause.

652.243-70 NOTICES (AUG 1999)

Any notice or request relating to this contract given by either party to the other shall be in writing. Said notice or request shall be mailed or delivered by hand to the other party at the address provided in the schedule of the contract. All modifications to the contract must be made in writing by the Contracting Officer.

52.240-91 Security Prohibitions and Exclusions

Security Prohibitions and Exclusions (Deviation Date)

(a) *Definitions.* As used in this clause—
American Security Drone Act-covered foreign entity means an entity included on a list that the Federal Acquisition Security Council (FASC) develops and maintains and publishes in the System for Award Management (SAM) at https://www.sam.gov (section 1822 of Pub. L. 118-31, 41 U.S.C. 3901 note prec.).
Backhaul means intermediate links between the core network, or backbone network, and the small subnetworks at the edge of the network (e.g., connecting cell phones/towers to the core telephone network). Backhaul can be wireless (e.g., microwave) or wired (e.g., fiber optic, coaxial cable, Ethernet).
Covered application means the social networking service TikTok or any successor application or service developed or provided by ByteDance Limited or an entity owned by ByteDance Limited.
Covered article, as defined in 41 U.S.C. 4713(k), means:
(1) Information technology, as defined in 40 U.S.C. 11101, including cloud computing services of all types;
(2) Telecommunications equipment or telecommunications service, as those terms are defined in section 3 of the Communications Act of 1934 (47 U.S.C. 153);
(3) The processing of information on a Federal or non-Federal information system, subject to the requirements of the Controlled Unclassified Information program (see 32 CFR part 2002); or
(4) Hardware, systems, devices, software, or services that include embedded or incidental information technology.

Covered foreign country means The People's Republic of China.
Covered telecommunications equipment or services means—
(1) Telecommunications equipment produced by Huawei Technologies Company or ZTE Corporation (or any subsidiary or affiliate of such entities);
(2) For the purpose of public safety, security of Government facilities, physical security surveillance of critical infrastructure, and other national security purposes, video surveillance and

telecommunications equipment produced by Hytera Communications Corporation, Hangzhou Hikvision Digital Technology Company, or Dahua Technology Company (or any subsidiary or affiliate of such entities);
(3) Telecommunications or video surveillance services provided by such entities or using such equipment; or
(4) Telecommunications or video surveillance equipment or services produced or provided by an entity that the Secretary of Defense, in consultation with the Director of National Intelligence or the Director of the Federal Bureau of Investigation, reasonably believes to be an entity owned or controlled by, or otherwise connected to, the government of a covered foreign country.

Critical technology means—
(1) Defense articles or defense services included on the United States Munitions List set forth in the International Traffic in Arms Regulations under subchapter M of chapter I of title 22, Code of Federal Regulations;
(2) Items included on the Commerce Control List set forth in Supplement No. 1 to part 774 of the Export Administration Regulations under subchapter C of chapter VII of title 15, Code of Federal Regulations, and controlled—
(i) Pursuant to multilateral regimes, including for reasons relating to national security, chemical and biological weapons proliferation, nuclear nonproliferation, or missile technology; or
(ii) For reasons relating to regional stability or surreptitious listening;
(3) Specially designed and prepared nuclear equipment, parts and components, materials, software, and technology covered by part 810 of title 10, Code of Federal Regulations (relating to assistance to foreign atomic energy activities);
(4) Nuclear facilities, equipment, and material covered by part 110 of title 10, Code of Federal Regulations (relating to export and import of nuclear equipment and material);
(5) Select agents and toxins covered by part 331 of title 7, Code of Federal Regulations, part 121 of title 9 of such Code, or part 73 of title 42 of such Code; or
(6) Emerging and foundational technologies controlled pursuant to section 1758 of the Export Control Reform Act of 2018 (50 U.S.C. 4817).

FASC-prohibited unmanned aircraft system means an unmanned aircraft system manufactured or assembled by an American Security Drone Act—covered foreign entity.
FASCSA order means any of the following orders issued under the Federal Acquisition Supply Chain Security Act (FASCSA) requiring removing covered articles from executive agency information systems or excluding one or more named sources or named covered articles from executive agency procurement actions, as described in 41 CFR 201-1.303(d) and (e):
(1) The Secretary of Homeland Security may issue FASCSA orders that apply to civilian agencies, to the extent not covered by paragraph (2) or (3) of this definition. This type of FASCSA order may be referred to as a Department of Homeland Security (DHS) FASCSA order.
(2) The Secretary of Defense may issue FASCSA orders that apply to the Department of Defense (DoD) and national security systems other than sensitive compartmented information systems. This type of FASCSA order may be referred to as a DoD FASCSA order.
(3) The Director of National Intelligence (DNI) may issue FASCSA orders that apply to the intelligence community and sensitive compartmented information systems, to the extent not covered by paragraph (2) of this definition. This type of FASCSA order may be referred to as a DNI FASCSA order.

Information technology, as defined in 40 U.S.C. 11101(6)—
(1) Means any equipment or interconnected system or subsystem of equipment, used in the automatic acquisition, storage, analysis, evaluation, manipulation, management, movement, control, display, switching, interchange, transmission, or reception of data or information by the executive agency, if the equipment is used by the executive agency directly or is used by a contractor under a contract with the executive agency that requires the use—
(i) Of that equipment; or
(ii) Of that equipment to a significant extent in the performance of a service or the furnishing of a product;
(2) Includes computers, ancillary equipment (including imaging peripherals, input, output, and storage devices necessary for security and surveillance), peripheral equipment designed to be controlled by the central processing unit of a computer, software, firmware and similar procedures, services (including support services), and related resources; but
(3) Does not include any equipment acquired by a Federal contractor incidental to a Federal contract.

Intelligence community, as defined by 50 U.S.C. 3003(4), means the following—
(1) The Office of the Director of National Intelligence;
(2) The Central Intelligence Agency;
(3) The National Security Agency;
(4) The Defense Intelligence Agency;
(5) The National Geospatial-Intelligence Agency;
(6) The National Reconnaissance Office;
(7) Other offices within the Department of Defense for the collection of specialized national intelligence through reconnaissance programs;
(8) The intelligence elements of the Army, the Navy, the Air Force, the Marine Corps, the Coast Guard, the Federal Bureau of Investigation, the Drug Enforcement Administration, and the Department of Energy;
(9) The Bureau of Intelligence and Research of the Department of State;
(10) The Office of Intelligence and Analysis of the Department of the Treasury;
(11) The Office of Intelligence and Analysis of the Department of Homeland Security; or
(12) Such other elements of any department or agency as may be designated by the President, or designated jointly by the Director of National Intelligence and the head of the department or agency concerned, as an element of the intelligence community.

Interconnection arrangements means arrangements governing the physical connection of two or more networks to allow the use of another's network to hand off traffic where it is ultimately delivered (e.g., connecting a customer of telephone provider A to a customer of telephone company B) or sharing data and other information resources.
Kaspersky Lab-covered article means any hardware, software, or service that—
(1) Is developed or provided by a Kaspersky Lab-covered entity;
(2) Includes any hardware, software, or service developed or provided in whole or in part by a Kaspersky Lab-covered entity; or
(3) Contains components using any hardware or software developed in whole or in part by a Kaspersky Lab-covered entity.

Kaspersky Lab-covered entity means—
(1) Kaspersky Lab;
(2) Any successor entity to Kaspersky Lab, including any change in name, e.g., "Kaspersky";
(3) Any entity that controls, is controlled by, or is under common control with Kaspersky Lab; or
(4) Any entity of which Kaspersky Lab has a majority ownership.

National security system, as defined in 44 U.S.C. 3552, means any information system (including any telecommunications system) used or operated by an agency or by a contractor of an agency, or other organization on behalf of an agency—
(1) The function, operation, or use of which involves intelligence activities; involves cryptologic activities related to national security; involves command and control of military forces; involves equipment that is an integral part of a weapon or weapons system; or is critical to the direct fulfillment of military or intelligence missions, but does not include a system that is to be used for routine administrative and business applications (including payroll, finance, logistics, and personnel management applications); or
(2) Is protected at all times by procedures established for information that have been specifically authorized under criteria established by an Executive order or an Act of Congress to be kept classified in the interest of national defense or foreign policy.

Roaming means cellular communications services (e.g., voice, video, data) received from a visited network when unable to connect to the facilities of the home network either because signal coverage is too weak or because traffic is too high.
Sensitive compartmented information means classified information concerning or derived from intelligence sources, methods, or analytical processes, which is required to be handled within formal access control systems established by the Director of National Intelligence.
Sensitive compartmented information system means a national security system authorized to process or store sensitive compartmented information.
Source means a non-Federal supplier, or potential supplier, of products or services, at any tier.
Subsidiary means an entity in which more than 50 percent of the entity is owned directly by a parent corporation or through another subsidiary of a parent corporation.
Substantial or essential component means any component necessary for the proper function or performance of a piece of equipment, system, or service.
Unmanned aircraft means an aircraft that is operated without the possibility of direct human intervention from within or on the aircraft (49 U.S.C. 44801(11)).
Unmanned aircraft system means an unmanned aircraft and associated elements (including communication links and the components that control the unmanned aircraft) that are required for the operator to operate safely and efficiently in the national airspace system (49 U.S.C. 44801(12)).
(b) *Prohibitions on providing or using specific products or services in performance of contract*. Unless a waiver or exception applies, the Contractor is prohibited from providing any products or services to the Government or using in the performance of the contract any of the following:
(1) A covered application on any information technology owned or managed by the Government, or on any information technology used or provided by the Contractor under this contract, including equipment provided by the Contractor's employees (section 102 of Division R of the Consolidated Appropriations Act, 2023 (Pub. L. 117-328));

(2) A Kaspersky Lab-covered article (Section 1634 of Division A of the National Defense Authorization Act for Fiscal Year 2018 (Pub. L. 115-91));
(3) Covered telecommunications equipment or services used as a substantial or essential component of any system, or as critical technology as part of any system (paragraphs (a)(1)(A) of section 889 of the John S. McCain National Defense Authorization Act for Fiscal Year 2019 (Pub. L. 115-232)). This does not prohibit contractors from providing—
(i) A service that connects to the facilities of a third-party, such as backhaul, roaming, or interconnection arrangements; or
(ii) Telecommunications equipment that cannot route or redirect user data traffic or cannot permit visibility into any user data or packets that such equipment transmits or otherwise handles.
(c) Prohibition on unmanned aircraft systems manufactured or assembled by American Security Drone Act—covered foreign entities.
(1) Prohibition. The Contractor is prohibited from—
(i) Delivering any FASC-prohibited unmanned aircraft system, which includes unmanned aircraft (i.e., drones) and associated elements (sections 1823 and 1826 of American Security Drone Act of 2023, within the National Defense Authorization Act for Fiscal Year 2024, Pub. L. 118-31, Div. A, Title XVIII, Subtitle B, 41 U.S.C. 3901 note prec.);
(ii) On or after December 22, 2025, operating a FASC-prohibited unmanned aircraft system in the performance of the contract (section 1824 of Pub. L. 118-31); and
(iii) On or after December 22, 2025, using Federal funds to procure or operate a FASC-prohibited unmanned aircraft system (section 1825 of Pub. L. 118-31).
(2) *Procedures*. The Contractor shall search SAM for the FASC-maintained list of American Security Drone Act—covered foreign entities before proposing, or using in performance of the contract, any unmanned aircraft system. Also, the Contractor shall ensure any effort or expenditure associated with a FASC-prohibited unmanned aircraft system is consistent with a corresponding exemption, exception, or waiver determination expressly stated in the contract.
(3) *Exemptions, exceptions, and waivers*. The prohibitions in paragraph (c) of this clause do not apply where the agency has determined an exemption, exception, or waiver applies, and the contract indicates that such a determination has been made. See sections 1823 through 1825 and 1832 of Public Law 118-31 for statutory requirements pertaining to exemptions, exceptions, and waivers.
(d) *Prohibition on using or providing specific products or services or conducting certain transactions regardless of connection to contract*.
(1) *Certain telecommunications and video surveillance equipment, systems, or services*.
(i) Unless an applicable waiver has been issued by the Government, the Contractor cannot use any equipment, systems, or services that uses covered telecommunications equipment or services as a substantial or essential component of any system, or as critical technology as part of any system (paragraph (a)(1)(B) of section 889 of the John S. McCain National Defense Authorization Act for Fiscal Year 2019 (Pub. L. 115-232)).
(ii) This prohibition applies to using covered telecommunications equipment or services, regardless of whether that use is in performance of work under a Federal contract. This does not prohibit the contractor from using—
(A) A service that connects to the facilities of a third party, such as backhaul, roaming, or interconnection arrangements; or
(B) Telecommunications equipment that cannot route or redirect user data traffic or cannot permit visibility into any user data or packets that such equipment transmits or otherwise handles.

(2) *Office of Foreign Assets Control Restrictions*.
(i) Except as authorized by the Office of Foreign Assets Control (OFAC) in the Department of the Treasury, the Contractor shall not acquire, for use in the performance of this contract, any supplies or services if any proclamation, Executive order, or statute administered by OFAC, or if OFAC's implementing regulations at 31 CFR chapter V, would prohibit such a transaction by a person subject to the jurisdiction of the United States.
(ii) Except as authorized by OFAC, most transactions involving Cuba, Iran, and Sudan are prohibited, as are most imports from Burma or North Korea, into the United States or its outlying areas.
(A) For lists of entities and individuals subject to economic sanctions, see OFAC's List of Specially Designated Nationals and Blocked Persons at https://home.treasury.gov/policy-issues/financial-sanctions/specially-designated-nationals-and-blocked-persons-list-sdn-human-readable-lists.
(B) For more information about these restrictions, as well as updates, see OFAC's regulations at 31 CFR chapter V and at https://home.treasury.gov/policy-issues/office-of-foreign-assets-control-sanctions-programs-and-information.
(C) To conduct electronic screens of potential parties to regulated transactions, see the consolidated screening list at https://www.trade.gov/consolidated-screening-list, which consolidates multiple export screening lists of the Departments of Commerce, State, and the Treasury.
(3) *Sudan prohibition*. The Contractor is prohibited from conducting any restricted business operations in Sudan in accordance with Accountability and Divestment Act of 2007 (Pub. L. 110-174).
(4) *Iran prohibitions*.
(i) Unless an exception applies according to paragraph (d)(4)(iii) or the Government grants a waiver, the contractor shall not engage in certain activities or transactions relating to Iran (section 6(b)(1)(A) of Iran Sanctions Act (50 U.S.C. 1701 note).
(ii) Unless an exception applies according to paragraph (d)(4)(iii) or the Government grants a waiver, contractor shall not export certain sensitive technology to Iran, as determined by the President, and has an active exclusion in SAM (22 U.S.C. 8515).
(iii) The prohibition in paragraphs (d)(4)(i) and (d)(4)(ii) do not apply if the acquisition is subject to trade agreements and the offeror certifies that all the offered products are designated country end products or designated country construction material (see part 25).
(iv) Unless an exception applies or the Government grants a waiver, contractors are prohibited from knowingly engaging in any significant transaction (i.e., over $15,000) with Iran's Revolutionary Guard Corps or any of its officials, agents, or affiliates, the property and interests in property of which are blocked according to the International Emergency Economic Powers Act (section 6(b)(1)(B) of Iran Sanctions Act (50 U.S.C. 1701 note)).
(e) *Governmentwide exclusion and removal orders*.
(1) Unless the Government has issued an applicable waiver, contractors shall not provide or use as part of the performance of the contract any covered article, or any products or services produced or provided by a source, if the covered article or the source is prohibited by an applicable FASCSA order as follows:
(i) For solicitations and contracts awarded by a Department of Defense contracting office, DoD FASCSA orders apply.
(ii) For all other solicitations and contracts, DHS FASCSA orders apply.

(2) The Contractor shall search for the phrase "FASCSA order" in the System for Award Management (SAM) at https://www.sam.gov to locate applicable FASCSA orders.
(3) The Government may identify in the solicitation other FASCSA orders that are not in SAM, which are effective and apply to the solicitation and resulting contract.
(4) A FASCSA order issued after the date of solicitation applies to this contract only if added by an amendment to the solicitation or modification to the contract (see FAR 40.204-1(c)).
(f) *Reasonable inquiry*. The contractor shall conduct a reasonable inquiry to determine if there are any prohibited products or services. The inquiry will look at any information in the entity's possession but does not need to include an internal or third-party audit.
(g) *Removal of prohibited products and services*. For Federal Supply Schedules, Governmentwide acquisition contracts, multi-agency contracts or any other procurement instrument intended for use by multiple agencies, upon notification from the Contracting Officer, during the performance of the contract, the Contractor shall promptly make any necessary changes or modifications to remove any product or service produced or provided by a source that this clause prohibits.
(h) *General report*.
(1) If the Contractor identifies or is notified by any source, (including a subcontractor at any tier), that any product or service provided or used (or to be provided or used) during contract performance does not comply with any prohibition in this clause, then the Contractor shall report the following information, or as much information is known, in writing to the contracting office as identified in paragraph (h)(2) within 72 hours:
(i) Contract number and order number, if applicable;
(ii) The specific prohibition the product or service is not complying with;
(iii) A description of the products or services that the Contractor identifies or has reason to suspect is prohibited (include brand; model number, such as the original equipment manufacturer (OEM) number, manufacturer part number, or wholesaler number; and item description, as applicable);
(iv) The entity that produced the product or service (include entity name, unique entity identifier, Contractor and Government Entity (CAGE) code, facilities responsible for design, fabrication, assembly, packaging, and test of the product, and whether the entity was the OEM or a distributor (provide manufacturer codes and distributor codes used for the product));
(v) Description of the functionality of the product or service and how that functionality impacts the risk to the product or service;
(vi) An explanation of any factors relevant to determining if the product or service should be permitted by an applicable exception, exemption, or waiver (if the contractor would like the Government to consider a waiver, and asks for such a waiver);
(vii) Whether alternative products or services are available that would comply with the prohibition;
(viii) If the product or service is related to item maintenance, include the following information on the item being maintained:
(A) Brand;
(B) Model number, OEM number, manufacturer part number, or wholesaler number; and
(C) Item description, as applicable.
(ix) Any readily available information about mitigation actions implemented or recommended.
(2) If a report must be submitted to a contracting office, the Contractor shall submit the report as follows:
(i) If a Department of Defense contracting office, the Contractor shall report to the website at https://dibnet.dod.mil.
(ii) For all other contracting offices, the Contractor shall report to the Contracting Officer.

(iii) For indefinite delivery contracts, the Contractor shall report to both the contracting office for the indefinite delivery contract and the contracting office for any affected order.
(3) If the report provided does not contain any of the information required by paragraph (h)(1) of this clause, and the contractor later discovers new information that is required by paragraph (h)(1) of this clause, then the contractor shall submit a subsequent report within 72 hours of discovering the new information.
(4) The contractor shall also report the information in paragraph (h)(1) if the contractor wishes to ask for a waiver of the requirements of a new FASCSA order being applied through modification.
(i) *New FASCSA orders report*.
(1) During contract performance, the Contractor shall review SAM at least once every three months, or as advised by the Contracting Officer, to check for covered articles subject to FASCSA order(s), or for products or services produced by a source subject to FASCSA order(s) not currently identified under paragraph (e) of this clause.
(2) If the Contractor identifies a new FASCSA order(s) that could impact their supply chain, then the Contractor shall conduct a reasonable inquiry to identify whether a covered article or product or service produced or provided by a source subject to the FASCSA order(s) was provided to the Government or used during contract performance. The inquiry will look at any information in the entity's possession but does not need to include an internal or third-party audit.
(3) The Contractor shall submit a report to the contracting office identified in paragraph (h)(2) of this clause if the Contractor identifies, including through any notification by a subcontractor at any tier, that a covered article or product or service produced or provided by a source was provided to the Government or used during contract performance and is subject to a FASCSA order(s). For indefinite delivery contracts, the Contractor shall report to both the contracting office for the indefinite delivery contract and the contracting office for any affected order. The Contractor shall report the following information within 72 hours for each covered article or each product or service produced or provided by a source, where the covered article or source is subject to a FASCSA order:
(i) Contract number and order number, if applicable;
(ii) Name of the covered article or source subject to a FASCSA order;
(iii) The specific FASCSA order the product or service does not comply with;
(iv) The elements of (h)(1)(iii) through (ix) of this clause.
(j) Subcontracts. The Contractor shall insert the substance of this clause, including this paragraph (j) but excluding subparagraphs (d)(1) and (i)(1), in all subcontracts and other contractual instruments, including subcontracts for acquiring commercial products or commercial services.

(End of clause)

SETION 3 - SOLICITATION PROVISIONS

52.212-1 INSTRUCTIONS TO OFFERORS- COMMERCIAL PRODUCTS AND COMMERCIAL SERVICES

Instructions to Offerors—Commercial Products and Commercial Services (Deviation Date)

(a) *Submission of offers*. Submit signed and dated offers to the office specified in this solicitation at or before the exact time specified in this solicitation. As a minimum, offers shall include—

(1) The solicitation number;

(2) The name, address, telephone number of the Offeror;

(3) The Offeror's Unique Entity Identifier (UEI) and, if applicable, Electronic Funds Transfer (EFT) indicator;

(4) Information necessary to evaluate the factors contained in the provision at 52.212-2 or as described in the solicitation;

(5) Responses to provisions that require Offeror completion of information, representations, and certifications (other than those collected via the System for Award Management (SAM)); and

(6) A statement specifying the extent of agreement with all terms, conditions, and provisions included in the solicitation and any solicitation amendments.

(b) *Period for acceptance of offers*. The Offeror agrees to hold the prices in its offer firm for 60 calendar days from the date specified for receipt of offers, unless another time period is specified in an addendum to the solicitation.

(c) *Late submissions, modifications, revisions, and withdrawals of offers*.

(1) Offerors are responsible for submitting offers and any modifications or revisions to the Government office designated in the solicitation by the time specified in the solicitation.

(2) Any offer, modification, or revision received after the time specified for receipt of offers is "late" and will not be considered unless it is received before award is made and the Contracting Officer determines that accepting the late offer would not unduly delay the acquisition. However, a late modification of an otherwise successful offer that makes its terms more favorable to the Government will be considered at any time it is received and may be accepted.

(3) If an emergency or unanticipated event interrupts normal Government processes so that offers cannot be received at the Government office designated for receipt of offers by the exact time specified in the solicitation, and urgent Government requirements preclude amendment of the solicitation or other notice of an extension of the closing date, the time specified for receipt of offers will be deemed to be extended to the same time of day specified in the solicitation on the first work day on which normal Government processes resume.

(4) Offerors may withdraw their offers by written notice to the Government received at any time before award.

(d) *Contract award (not applicable to Invitation for Bids)*. The Government intends to evaluate offers and award a contract without discussions with Offerors. Therefore, the Offeror's initial offer should contain the Offeror's best terms. However, the

Government reserves the right to conduct discussions, if necessary. The Government may reject any or all offers if such action is in the public interest, accept other than the lowest offer, and waive informalities and minor irregularities in offers received.

(e) *Debriefings*. If a postaward debriefing is given to requesting Offerors, the Government will disclose the following information, if applicable:

(1) The agency's evaluation of the significant weak or deficient factors in the debriefed Offeror's offer.

(2) The overall evaluated cost or price and technical rating of the successful Offeror and the debriefed Offeror and past performance information on the debriefed Offeror.

(3) The overall ranking of all Offerors when any ranking was developed by the agency during source selection.

(4) A summary of the rationale for award.

(5) For acquisitions of commercial products, the make and model of the product to be delivered by the successful Offeror.

(6) Reasonable responses to relevant questions posed by the debriefed Offeror as to whether the agency followed source-selection procedures set forth in the solicitation, applicable regulations, and other applicable authorities.

(End of provision)

ADDENDUM TO SOLICITATION PROVISIONS
FAR AND DOSAR PROVISIONS NOT PRESCRIBED IN PART 12

THE FOLLOWING FEDERAL ACQUISITION REGULATION SOLICITATION PROVISIONS ARE INCORPORATED BY REFERENCE:

PROVISION TITLE AND DATE

52.204-7 SYSTEM FOR AWARD MANAGEMENT—REGISTRATION (DEVIATION DATE)

52.212-1 INSTRUCTIONS TO OFFERORS -- COMMERCIAL PRODUCTS AND COMMERCIAL SERVICES (DEVIATION DATE)

52.214-34 SUBMISSION OF OFFERS IN THE ENGLISH LANGUAGE (APR 1991)

52.233-2 SERVICE OF PROTEST (SEP 2006)

a) Protests, as defined in section 33.101 of the Federal Acquisition Regulation, that are filed directly with an agency, and copies of any protests that are filed with the General Accounting Office (GAO) shall be served on the Contracting Officer (addressed as follows) by obtaining written and dated acknowledgment of receipt from the Head of Contracting Activity of the U.S. Embassy Mexico City.

b) The copy of any protest shall be received in the office designated above within one day of filing a protest with the GAO.

THE FOLLOWING DOSAR PROVISION(S) IS/ARE PROVIDED IN FULL TEXT:

652.206-70 ADVOCATE FOR COMPETITION/OMBUDSMAN (FEB 2015)

(a) The Department of State's Advocate for Competition is responsible for assisting industry in removing restrictive requirements from Department of State solicitations and removing barriers to full and open competition and use of commercial items. If such a solicitation is considered competitively restrictive or does not appear properly conducive to competition and commercial practices, potential offerors are encouraged first to contact the contracting office for the solicitation. If concerns remain unresolved, contact:

(1) For solicitations issued by the Office of Acquisition Management (A/GA/AMD) or a Regional Procurement Support Office, the A/GA/AMD Advocate for Competition, at AQMCompetitionAdvocate@state.gov.

(2) For all others, the Department of State Advocate for Competition at cat@state.gov.

(b) The Department of State's Acquisition Ombudsman has been appointed to hear concerns from potential offerors and contractors during the pre-award and post-award phases of this acquisition. The role of the ombudsman is not to diminish the authority of the contracting officer, the Technical Evaluation Panel or Source Evaluation Board, or the selection official. The purpose of the ombudsman is to facilitate the communication of concerns, issues, disagreements, and recommendations of interested parties to the appropriate Government personnel, and work to resolve them. When requested and appropriate, the ombudsman will maintain strict confidentiality as to the source of the concern. The ombudsman does not participate in the evaluation of quotes, the source selection process, or the adjudication of formal contract disputes. Interested parties are invited to contact the contracting activity ombudsman, Minister Counselor for Management Affairs, at 5080-2300. For an American Embassy or overseas post, refer to the numbers below for the Department Acquisition Ombudsman. Concerns, issues, disagreements, and recommendations which cannot be resolved at a contracting activity level may be referred to the Department of State Acquisition Ombudsman at (703) 516-1696 or write to: Department of State, Acquisition Ombudsman, Office of Global Acquisitions (A/GA), Suite 1060, SA-15, Washington, DC 20520.

(End of provision)

3.1 PRE-PROPOSAL CONFERENCE

3.1.1 Date and Time.

A site visit to discuss the requirements of this solicitation will be held on May 28, 2026 at 10:00 hours (CST) Prospective offerors/quoters should contact the Contracting team at MexicoCityGSOSolicitations@groups.state.gov for additional information.

3.2 QUESTIONS & ANSWERS

Oral questions will not be answered. Questions related to this Solicitation shall be submitted in writing and in English language. All questions shall refer to the page number, section, paragraph, and sentence of the solicitation to prevent confusions.

3.2.1 Questions and Answers Before Site Visit.

Offerors are urged to submit written questions at least three (3) days before the scheduled pre-proposal conference date using the email address below:

MexicoCityGSOSolicitations@groups.state.gov

3.2.2 Questions at the Site Visit.

The Government will try to answer all questions submitted before the Site Visit. Attendees may also ask additional questions at the site visit; however, if any answer requires further research, there is no guarantee that the question will be answered at the visit.

3.2.3 Government Statements at the Site Visit.

The Government's statements at the pre-proposal conference shall not be considered to be a change to the solicitation unless a written amendment is issued.

3.2.4 Deadline to Submit Questions.

The deadline to submit a question is June 4, 2026, before 13:00 hours (noon), local time.

3.2.5 Posting of Questions and Answers

Following the questions deadline, questions and answers will be posted on SAM.gov (https://sam.gov/content/opportunities). All prospective offerors will be able to download all questions presented in writing prior, during and after the pre-proposal conference, along with answers. If the answer requires a change to the solicitation, a solicitation amendment will also be issued and posted.

SECTION 4 - EVALUATION FACTORS

4.1 Award will be made to the lowest priced, acceptable, responsible offeror. The quoter shall submit a completed solicitation, including Sections 1 and 5.

4.2 The Government reserves the right to reject quotes that are unreasonably low or high in price.

4.3 The lowest price will be determined by multiplying the offered prices times the estimated quantities in "Prices - Continuation of SF-1449, block 23", and arriving at a grand total, including all options.

4.4 The Government will determine acceptability by assessing the offeror's compliance with the terms of the RFQ to include the technical information required by Section 3 and 4.

4.5 The Government will determine contractor responsibility by analyzing whether the apparent successful offeror complies with the requirements of FAR 9.1, including:

- Adequate financial resources or the ability to obtain them;
- Ability to comply with the required performance period, taking into consideration all existing commercial and governmental business commitments;
- Satisfactory record of integrity and business ethics;
- Necessary organization, experience, and skills or the ability to obtain them;
- Necessary equipment and facilities or the ability to obtain them; and
- Be otherwise qualified and eligible to receive an award under applicable laws and regulations.

ADDENDUM TO EVALUATION FACTORS
FAR AND DOSAR PROVISION(S) NOT PRESCRIBED IN PART 12

THE FOLLOWING FAR PROVISION(S) IS/ARE PROVIDED IN FULL TEXT:

52.217-5 EVALUATION OF OPTIONS (DEVIATION DATE)

Except when it is determined in accordance with FAR 17.202(b) not to be in the Government's best interests, the Government will evaluate offers for award purposes by adding the total price for all options to the total price for the basic requirement. Evaluation of options will not obligate the Government to exercise the option(s).

(End of provision)

52.225-17 EVALUATION OF FOREIGN CURRENCY OFFERS (FEB 2000)

If the Government receives offers in more than one currency, the Government will evaluate offers by converting the foreign currency to United States currency using the exchange rate used by the Embassy in effect as follows:

(a) For acquisitions conducted using sealed bidding procedures, on the date of bid opening.

(b) For acquisitions conducted using negotiation procedures—

(1) On the date specified for receipt of offers, if award is based on initial offers; Otherwise

(2) On the date specified for receipt of quote revisions.

4.6 TECHNICAL EVALUATION

4.6.1 Licensing and Legal Authorization Requirement.

Offerors must provide documentation demonstrating their legal authorization to perform the services described in this solicitation. To comply, offerors may provide the following:

a) For Offerors Operating in Mexico:
- Valid REPSE registration for the specialized services being offered, specifically including Voltage Electrical Equipment maintenance.

b) For Offerors Operating in the United States:
- Valid General Contractor License, if required by the relevant state or local jurisdiction.

c) The Contractor must provide a valid copy of their Electrical Contractor's License, Electrical Masters Licenses, or State equivalent that provides Signing Authority for Permits acquired by the Electrical Contractor, and any Electrical Journeyman's Licenses for the personnel performing work on site. These licenses are only accepted if issued by a State or Municipal Licensing Authority in which the contractor's business operates, or if accepted by that State's Licensing Authority. Licenses will be verified through the State's website prior to acceptance of a proposal. A qualified Electrical Journeyman, or above, is required to perform switchgear inspections, function testing, and/or system operations, in accordance with this work statement. A qualified Electrical Journeyman, or above, is required to be on site when any work is being performed under this contract.

d) The contractor must provide copies of Training Certificates in the Fundamentals of Electrical Safety based on NFPA 70E standards for all proposed on-site personnel. This training must have been completed within one year prior to the start of the contract. NFPA 70E defines a qualified person as one who has skills and knowledge related to construction and operation of electrical equipment and installations. The contractor must demonstrate that all personnel assigned to perform the tasks, described in this scope, are trained as defined by NFPA 70E, Article 110.3. A Qualified Person has received safety training to recognize and avoid all hazards involved. All performing

technicians and engineers must be formally trained to comply with NFPA-70E guidelines and provide documentation of successful course completion. Recertification is required at three (3) year intervals. The contractor shall furnish all tools, test equipment, arc-flash PPE, and electrical safety PPE required by NFPA 70E to comply with this statement of work. The contractor will properly supervise all site personnel who are trained and qualified to work on MV systems. Working voltages for the equipment being maintained as part of this scope is 10kV - 35kV, line to line.

4.6.2 Proof of experience

a) Offerors shall provide documentation demonstrating relevant experience in performing Preventive Maintenance and Repair for Medium Voltage Electrical Equipment, controls, and auxiliary equipment, for facilities of similar size and complexity.

b) Offerors must submit details for at least five (5) contracts completed within the past ten (10) years. At least three (3) of these contracts shall include Medium Voltage Electrical Equipment Maintenance Services comparable in scope to this solicitation

c) For each contract, the following information shall be provided:

- Client Name:
- Location (City, Country):
- Contract Title or Description:
- Brief Scope of Work:
- Contract Value:
- Period of Performance: (start and end dates)
- Client Point of Contact: (name, title, email, and telephone number)

d) The Government reserves the right to contact any or all references to verify the information provided and to assess the offeror's performance on previous contracts.

4.6.3 Organizational Structure Submission.

a) Offerors shall submit an organizational chart specific to this contract, clearly indicating the proposed structure and position titles necessary to fulfill the requirements of the scope of work.

b) The organizational structure shall include, at a minimum:

- The Contractor must provide company as well as the individual technicians documentation of experience of +10 years of medium voltage electrical indoor and underground MV systems.
- At least one qualified electrician and one qualified MV technician.

4.6.4 Technical Capability Verification

Offerors shall demonstrate the technical capability of their proposed personnel to perform Medium Voltage Electrical Equipment Preventive Maintenance Services in accordance with this SOW. As part of the proposal, Offerors shall provide written description to the following technical subjects:

a) As applicable for the equipment to be serviced, demonstrable evidence of their personnel expertise in the equipment's software, and troubleshooting capabilities.

Responses will be evaluated based on technical accuracy, completeness, and practical knowledge. Failure to demonstrate sufficient technical capability may result in the proposal being considered technically unacceptable.

4.6.5 Subcontracting Limitation and Notification Requirement:

The contractor shall not subcontract more than ten percent (10%) of the total value of maintenance services under this contract without prior written approval from the COR. If subcontracted labor exceeds this threshold, the contractor must provide a list of all subcontractors engaged, including primary points of contact for each,

Any Offeror intending to subcontract these services shall provide all documents requested in paragraph 4.6.1 through 4.6.4 of this Section 4 for both the prime contractor and the subcontractor as part of their proposal. The submission must include a duly signed letter from the subcontractor's legal representative confirming acceptance of the Terms and Conditions of this Contract.

Offerors/Quoters in a partnering or subcontracting arrangement must submit a proposal that clearly delineates the roles and responsibilities of the prime contractor and the subcontractor. In the case of a joint venture arrangement, the proposal must clearly outline the structure and responsibilities of the partnership.

4.6.6 Safety Plan (Attachment G)

SECTION 5 - REPRESENTATIONS AND CERTIFICATIONS

ADDENDUM TO SOLICITATION PROVISIONS
FAR AND DOSAR PROVISIONS NOT PRESCRIBED IN PART 12

FAR Clauses Incorporated by Reference

52.252-1 SOLICITATION PROVISIONS INCORPORATED BY REFERENCE (FEB 1998)

This solicitation incorporates one or more solicitation provisions by reference, with the same force and effect as if they were given in full text. Upon request, the Contracting Officer will make their full text available. Also, the full text of a clause may be accessed electronically at: *http://www.acquisition.gov/far/* or *http://farsite.hill.af.mil/vffara.htm*

These addresses are subject to change. If the FAR is not available at the locations indicated above, use of an internet "search engine" (for example, Google, Yahoo, Excite) is suggested to obtain the latest location of the most current FAR provisions.

52.240-90 Security Prohibitions and Exclusions Representations and Certifications.

Security Prohibitions and Exclusions Representations and Certifications (Deviation Date)

(a) *Definitions.* As used in this provision-—
Backhaul, covered article, covered telecommunications equipment or services, critical technology, FASCSA order, Intelligence community, interconnection arrangements, national security system, roaming, sensitive compartmented information, sensitive compartmented information system, source, and substantial or essential component have the meanings provided in the clause 52.240-91, Security Prohibitions and Exclusions.
Business operations means engaging in commerce in any form, including by acquiring, developing, maintaining, owning, selling, possessing, leasing, or operating equipment, facilities, personnel, products, services, personal property, real property, or any other apparatus of business or commerce.
Marginalized populations of Sudan means—
(1) Adversely affected groups in regions authorized to receive assistance under section 8(c) of the Darfur Peace and Accountability Act (Pub. L. 109-344) (50 U.S.C. 1701 note); and
(2) Marginalized areas in Northern Sudan described in section 4(9) of such Act.

Restricted business operations means business operations in Sudan that include power production activities, mineral extraction activities, oil-related activities, or the production of military equipment, as those terms are defined in the Sudan Accountability and Divestment Act of 2007 (Pub. L. 110-174). Restricted business operations do not include business operations that the person (as that term is defined in Section 2 of the Sudan Accountability and Divestment Act of 2007) conducting the business can demonstrate—

(1) Are conducted under contract directly and exclusively with the regional government of southern Sudan;
(2) Are conducted under specific authorization from the Office of Foreign Assets Control in the Department of the Treasury, or are expressly exempted under Federal law from the requirement to be conducted under such authorization;
(3) Consist of providing goods or services to marginalized populations of Sudan;
(4) Consist of providing goods or services to an internationally recognized peacekeeping force or humanitarian organization;
(5) Consist of providing goods or services that are used only to promote health or education; or
(6) Have been voluntarily suspended.

Sensitive technology—
(1) Means hardware, software, telecommunications equipment, or any other technology that is to be used specifically—
(i) To restrict the free flow of unbiased information in Iran; or
(ii) To disrupt, monitor, or otherwise restrict speech of the people of Iran; and
(2) Does not include information or informational materials the export of which the President does not have the authority to regulate or prohibit pursuant to section 203(b)(3) of the International Emergency Economic Powers Act (50 U.S.C. 1702(b)(3)).

(b) *Procedures*.
(1) *Covered telecommunications and video surveillance*. The Offeror shall review the list of excluded parties in the System for Award Management (SAM) at https://www.sam.gov for entities excluded from receiving federal awards for "covered telecommunications equipment or services."
(2) *FASCSA Orders*.
(i) The Offeror shall search in SAM for the phrase "FASCSA order" for any covered article, or any products or services produced or provided by a source, if there is an applicable FASCSA order described in paragraph (e) of FAR 52.240-91, Security Prohibitions and Exclusions.
(ii) The Offeror shall review the solicitation for any FASCSA orders that are not in SAM but are effective and apply to the solicitation and resultant contract (see FAR 40.204-1(c)(2)).
(iii) FASCSA orders issued after the date of solicitation do not apply unless added by an amendment to the solicitation.
(c) *Covered telecommunications equipment or services representations*. By submission of its offer, the Offeror represents that, after conducting a reasonable inquiry (that looks at any information in the Offeror's possession but does not need to include an internal or third-party audit)—
(1) It will not provide covered telecommunications equipment or services to the Government in the performance of any contract, subcontract or other contractual instrument resulting from this solicitation, except as waived by the solicitation, or as disclosed in paragraph (g); and
(2) It does not use covered telecommunications equipment or services, or use any equipment, system, or service that uses covered telecommunications equipment or services, except as waived by the solicitation, or as disclosed in paragraph (g).
(d) *FASCSA Representation*. By submission of this offer, the offeror represents that it has conducted a reasonable inquiry, and that the offeror does not propose to provide or use in response to this solicitation any covered article, or any products or services produced or provided by a source, if the covered article or the source is prohibited by an applicable FASCSA order in effect

on the date the solicitation was issued, except as waived by the solicitation, or as disclosed in paragraph (g). A reasonable inquiry will look at any information in the offeror's possession but does not need to include an internal or third-party audit.

(e) *Sudan certification*. By submission of its offer, the offeror certifies, after conducting a reasonable inquiry (that looks at any information in the offeror's possession but does not need to include an internal or third-party audit), that the offeror does not conduct any restricted business operations in Sudan.

(f) *Iran Representation and Certifications*.

(1) Except as provided in paragraph (f)(2) of this provision or if a waiver has been granted in accordance with FAR 40.203-3, the offeror, after conducting a reasonable inquiry (that looks at any information in the offeror's possession but does not need to include an internal or third-party audit), by submission of its offer—

(i) Represents, to the best of its knowledge and belief, that the offeror does not export any sensitive technology to the government of Iran or any entities or individuals owned or controlled by, or acting on behalf or at the direction of, the government of Iran;

(ii) Certifies that the offeror, or any person (as defined at section 15 of the Iran Sanctions Act of 1996, Pub. L. 104-172, 50 U.S.C. 1701 note) owned or controlled by the offeror, does not engage in any activities for which sanctions may be imposed under section 5 of the Act. These sanctioned activities are in the areas of development of the petroleum resources of Iran, production of refined petroleum products in Iran, sale and provision of refined petroleum products to Iran, and contributing to Iran's ability to acquire or develop certain weapons or technologies; and

(iii) Certifies that the offeror, and any person owned or controlled by the offeror, does not knowingly engage in any transaction that exceeds $15,000 with Iran's Revolutionary Guard Corps or any of its officials, agents, or affiliates, the property and interests in property of which are blocked pursuant to the International Emergency Economic Powers Act (50 U.S.C. 1701 et seq.) (see OFAC's Specially Designated Nationals and Blocked Persons List at https://www.treasury.gov/resource-center/sanctions/SDN-List/Pages/default.aspx)

(2) Exception for trade agreements. The representation and certification requirements of paragraph (f)(1) of this provision do not apply if—

(i) This solicitation includes a trade agreements notice or certification (e.g., 52.225-6, Trade Agreements Certificate); and

(ii) The offeror has certified that all the offered products to be supplied are designated country end products or designated country construction material.

(iii) The offeror shall email questions concerning sensitive technology to the Department of State at CISADA106@state.gov.

(g) *Disclosure*.

(1) If the Offeror is not able to represent compliance with the prohibitions in paragraphs (c) or (d), then the Offeror shall disclose within 72 hours to the contracting office identified in paragraph (g)(2) the following information for each product or service not compliant:

(i) Contract number and order number, if applicable;

(ii) Identification of whether this disclosure relates to paragraph (c) on covered telecommunication equipment or services, or to paragraph (d) on FASCSA orders;

(iii) A description of the products or services that the Contractor identifies or has reason to suspect is prohibited (include brand; model number, such as the original equipment manufacturer (OEM) number, manufacturer part number, or wholesaler number; and item description, as applicable);

(iv) The entity that produced the product or service (include entity name, unique entity identifier, Contractor and Government Entity (CAGE) code, facilities responsible for design, fabrication, assembly, packaging, and test of the product, and whether the entity was the OEM or a distributor (provide manufacturer codes and distributor codes used for the product));
(v) Description of the functionality of the product or service and how that functionality impacts the risk to the product or service;
(vi) An explanation of any factors relevant to determining if the product or service should be permitted by an applicable exception, exemption, or waiver (if the offeror would like the Government to consider a waiver);
(vii) Whether alternative products or services are available that would be compliant with the prohibition;
(viii) If the product or service is related to item maintenance, include the following information on the item being maintained:
(A) Brand;
(B) Model number, OEM number, manufacturer part number, or wholesaler number; and
(C) Item description, as applicable.
(ix) Any readily available information about mitigation actions undertaken or recommended.
(2) If a disclosure is required to be submitted to a contracting office, the offeror shall submit the disclosure as follows:
(i) If a Department of Defense contracting office, the offeror shall submit the disclosure to the website at https://dibnet.dod.mil.
(ii) For all other contracting offices, the Offeror shall submit the disclosure to the Contracting Officer.
(3) If the disclosure provided does not contain any of the information required by paragraph (1), and the Offeror later discovers new information that is required by paragraph (1), then the Offeror shall submit a subsequent disclosure within 72 hours of discovering the new information.
(h) *Executive agency review of disclosures*. The Contracting Officer will review disclosures provided in paragraph (g) to determine if any applicable waiver may be sought. The Contracting Officer may choose not to pursue a waiver and may instead make an award to an Offeror that does not require a waiver.

(End of provision)