Request for Proposal (RFP)
Solicitation No. 140R6026R0014

Spillway Gantry Crane Removal

Tiber Dam, Chester, Montana

FOR OFFICIAL USE ONLY

U.S. Department of the Interior
Bureau of Reclamation
Missouri Basin and Arkansas-Rio Grande-Texas Gulf Regions
Billings, Montana

June 2026

SPILLWAY GANTRY CRANE REMOVAL
TIBER DAM, CHESTER, MONTANA

FOREWORD

The work is located at Tiber Dam, which is approximately 20 miles southwest of Chester, Montana in Liberty County.

Principal components of work include:

A. Remove all crane components, including the crane frame, bridge, hoist, rail, and rail support beams and columns.

B. Load, haul, and legally dispose of all materials off site.

C. After removal of the existing crane components, install and remove government furnished stoplogs into each of the 3 spillway gate bays.

Method Of Procurement – This requirement is solicited as a Request for Proposal (RFP) using the Federal Acquisition Regulation (FAR) part 15 – Contracting by Negotiation.

Point Of Contact – The Contract Specialist for this requirement is Ms. Sydney Oakes and the Contracting Officer is Ms. Charlene Maurer. All questions and correspondence concerning this solicitation shall be directed to them via email at sydney_oakes@ios.doi.gov and charlene_maurer@ios.doi.gov.

Organized Site Visit – An organized site visit has been scheduled for July 8th, 2026, at 10:00 AM MDT. Participants will meet at 882 Sanford Park Road, Chester, Montana, 59522. Prospective offerors are strongly encouraged to attend the pre-proposal site visit to gain a better understanding of the work requirements and site conditions. Prospective offerors that are interested in attending shall contact the Contracting Officer Representative (COR), Mr. Jacob Noland, via email at jnoland@usbr.gov.

Contractor Questions – The Government will not address questions received during the organized site visit. The Government will not address questions received from prospective offerors after July 14, 2026, at 5:00 PM MDT. Questions shall be submitted via email to the Contract Specialist and Contracting Officer. The Government's answers to questions received will be addressed via an amendment.

Reclamation Safety and Health Standards (RSHS) – For information regarding Bureau of Reclamation's publication "Reclamation Safety and Health Standards" including revisions at https://www.usbr.gov/safety/rshs/ which is applicable to work under this contract, see clause at "WBR 1452.223-81 Safety and Health."

System for Award Management (SAM) – Effective October 26, 2018, all contractors interested in doing business with the Federal Government must be registered in the System for Award Management (SAM) database prior to submitting an offer or quotation. Note: Registering in SAM does not constitute an automatic award of any contract or agreement to the registering contractor. SAM is a centralized database consolidating the Central Contractor Registration (CCR), the online

Representation and Certifications Application (ORCA), and the Excluded Parties List System (EPLS). Additionally, the contractor's DUNS and BRADSTREET and banking information are required for the SAM registration. Annual confirmation of registration requirements must be accomplished through the SAM website at https://www.sam.gov. For assistance with registering in SAM, contact the Federal Services Desk at 1-866-606-8220.

> **Note:** System updates may lag policy updates. The System for Award Management (SAM) may continue to require entities to complete representations based on provisions that are not included in agency solicitations. Examples include 52.222-25, Affirmative Action Compliance, and paragraph (d) of 52.212-3, Offeror Representations and Certifications—Commercial Products and Commercial Services. Contracting officers will not consider these representations when making award decisions or enforce requirements. Entities are not required to, nor are they able to, update their entity registration to remove these representations in SAM.

Invoice Processing Platform (IPP) – Payment requests for the anticipated contract are required to be submitted electronically through the U.S. Department of Treasury's Invoice Processing Platform (IPP) system. The IPP website is https://www.ipp.gov. The contractor must use the IPP website to register access and submit requests for payment. Contractor assistance with enrollment can be obtained by contacting the IPP production helpdesk via e-mail at ippgroup@bos.frb.org or by telephone at (866) 973-3131. If the contractor is unable to comply with the requirement to use IPP for submitting invoices for payment, the contractor must submit a waiver request in writing to the Contracting Officer with their proposal.

> **Note:** Waivers will be on a case by case basis and not automatically granted as determined by the Contract Officer. Please see Paragraph G.3, DOI-AAAP-0028 for more specific information on the process for submitting invoices in IPP.

END OF FOREWARD

SOLICITATION, OFFER, AND AWARD (Construction, Alteration, or Repair)	1. SOLICITATION NO. 140R6026R0014	2. TYPE OF SOLICITATION ☐ SEALED BID (IFB) INVITATION FOR BID ☒ NEGOTIATED (RFP) REQUEST FOR PROPOSAL	3. DATE ISSUED 06/26/2026	PAGE 1 OF 3 PAGES

IMPORTANT - The "offer" section on the reverse must be fully completed by offeror.

4. CONTRACT NO.	5. REQUISITION/PURCHASE REQUEST NO.	6. PROJECT NO.

7. ISSUED BY CODE R60	8. ADDRESS OFFER TO
Bureau of Reclamation Missouri Basin Regional Office 2021 4th Avenue North Billings MT 59101	Bureau of Reclamation Attn: MB-5000, Charlene Maurer 2021 4th Ave North Billings MT 59101

9. FOR INFORMATION CALL	a. NAME	b. TELEPHONE NO. *(Include area code) (NO COLLECT CALLS)*
	Sydney Oakes	4062333647

SOLICITATION

NOTE: In sealed bid solicitations "offer" and "offeror" mean "bid and "bidder".

10. THE GOVERNMENT REQUIRES PERFORMANCE OF THE WORK DESCRIBED IN THESE DOCUMENTS *(Title, identifying number, date)*

Spillway Gantry Crane Removal, Tiber Dam, Chester, Montana

The North American Industry Classification System (NAICS) code is: 237990 - Other Heavy and Civil Engineering Construction.

The Product Service Code (PSC) is: Z2KA - Repair or Alteration of Dams.

This Request for Proposal (RFP) is issued as a Total Small Business Set-Aside.

Proposals are to be submitted via email to sydney_oakes@ios.doi.gov and charlene_maurer@ios.doi.gov. Reclamation's email servers limit attachments to 25 MB per message. Therefore, the offeror may need to submit multiple emails to ensure the Contract Specialist and Contracting Officer receives the complete proposal (Volumes 1-3) (See Provision WBR 1452.215-81 Proposal Instructions - Bureau of Reclamation).

11. The contractor shall begin performance within 10 calendar days and complete it within 73 calendar days after receiving ☐ award, ☒ notice to proceed. This performance period is ☒ mandatory ☐ negotiable. ***(See*** SOW ***).***

12a. THE CONTRACTOR MUST FURNISH ANY REQUIRED PERFORMANCE AND PAYMENT BONDS? *(If "YES", indicate within how many calendar days after award in Item 12b.)*	12b. CALENDAR DAYS
☒ YES ☐ NO	10

13. ADDITIONAL SOLICITATION REQUIREMENTS:

a. Sealed offers in original and _____ copies to perform the work required are due at the place specified in Item 8 by 1500 ***(hour)*** local time 07/27/2026 (date). If this is a sealed bid solicitation, offers will be publicly opened at that time. Sealed envelopes containing offers shall be marked to show the offeror's name and address, the solicitation number, and the date and time offers are due.

b. An offer guarantee ☐ is, ☒ is not required.

c. All offers are subject to the (1) work requirements, and (2) other provisions and clauses incorporated in the solicitation in full text or by reference.

d. Offers providing less than 60 calendar days for Government acceptance after the date offers are due will not be considered and will be rejected.

OFFER *(Must be fully completed by offeror)*

14. NAME AND ADDRESS OF OFFEROR *(Include ZIP Code)*

CODE FACILITY CODE

15. TELEPHONE NO. *(Include area code)*

16. REMITTANCE ADDRESS *(Include only if different than Item 14.)*

17. The offeror agrees to perform the work required at the prices specified below in strict accordance with the terms of this solicitation, if this offer is accepted by the Government in writing within _____ calendar days after the date offers are due. *(Insert any number equal to or greater than the minimum requirement stated in Item 13d. Failure to insert any number means the offeror accepts the minimum in Item 13d.)*

AMOUNTS ▶

18. The offeror agrees to furnish any required performance and payment bonds.

19. ACKNOWLEDGMENT OF AMENDMENTS

(The offeror acknowledges receipt of amendments to the solicitation -- give number and date of each)

AMENDMENT NUMBER										
DATE.										

20a. NAME AND TITLE OF PERSON AUTHORIZED TO SIGN OFFER *(Type or print)*

20b. SIGNATURE

20c. OFFER DATE

AWARD *(To be completed by Government)*

21. ITEMS ACCEPTED:

22. AMOUNT

23. ACCOUNTING AND APPROPRIATION DATA

24. SUBMIT INVOICES TO ADDRESS SHOWN IN ▶ *(4 copies unless otherwise specified)*

ITEM

25. OTHER THAN FULL AND OPEN COMPETITION PURSUANT TO THE UNITED STATES CODE AT

☐ 10 U.S.C. 3204(a) ( ) ☐ 41 U.S.C. 3304(a) ( )

26. ADMINISTERED BY R60

Bureau of Reclamation
Missouri Basin Regional Office
2021 4th Avenue North
Billings MT 59101

27. PAYMENT WILL BE MADE BY

CONTRACTING OFFICER WILL COMPLETE ITEM 28 OR 29 AS APPLICABLE

☐ 28. NEGOTIATED AGREEMENT *(Contractor is required to sign this document and return _____ copies to issuing office.)* Contractor agrees to furnish and deliver all items or perform all work requirements identified on this form and any continuation sheets for the consideration stated in this contract. The rights and obligations of the parties to this contract shall be governed by (a) this contract award, (b) the solicitation, and (c) the clauses, representations, certifications, and specifications incorporated by reference in or attached to this contract.

☐ 29. AWARD *(Contractor is not required to sign this document.)* Your offer on this solicitation is hereby accepted as to the items listed. This award consummates the contract, which consists of (a) the Government solicitation and your offer, and (b) this contract award. No further contractual document is necessary.

30a. NAME AND TITLE OF CONTRACTOR OR PERSON AUTHORIZED TO SIGN *(Type or print)*

31a. NAME OF CONTRACTING OFFICER *(Type or print)*

Charlene Maurer

30b. SIGNATURE

30c. DATE

31b. UNITED STATES OF AMERICA

BY

31c. DATE

NAME OF OFFEROR OR CONTRACTOR

ITEM NO. (A)	SUPPLIES/SERVICES (B)	QUANTITY (C)	UNIT (D)	UNIT PRICE (E)	AMOUNT (F)
	Period of Performance: 08/17/2026 to 10/29/2026				
00010	Crane Removal Product/Service Code: Z2KA Product/Service Description: REPAIR OR ALTERATION OF DAMS				
00020	Stop Log Installation and Removal Product/Service Code: Z2KA Product/Service Description: REPAIR OR ALTERATION OF DAMS				
00030	Mobilization and Preparatory Work Product/Service Code: Z2KA Product/Service Description: REPAIR OR ALTERATION OF DAMS				

SPILLWAY GANTRY CRANE REMOVAL
TIBER DAM, CHESTER, MONTANA

PRICE SCHEDULE

(a) Offerors will be considered for award on the following Price Schedule, but no offer will be considered for award on only part of the Price Schedule.

(b) Offers are subject to the terms and conditions of this solicitation.

(c) Definitions:

(1) CLIN – Contract Line Item Number

Price Schedule

CLIN	Description	Quantity & Unit	Unit Price	Amount
1	Mobilization & Preparatory Work	For the Lump Sum of		$
2	Crane Removal	For the Lump Sum of		$
3	Stoplog Installation & Removal	For the Lump Sum of		$
			Price Schedule Total Amount:	**$**

SPILLWAY GANTRY CRANE REMOVAL
TIBER DAM, CHESTER, MONTANA

STATEMENT OF WORK (SOW)

1.0 Background

The Bureau of Reclamation (Reclamation) Missouri Basin Regional Office (MBRO) has need for the removal and disposal of a gantry crane located at the spillway of Tiber Dam, Montana. Attached to the end of this SOW are drawings and photographs of the existing crane installation.

2.0 Scope

The Tiber Dam Spillway Gantry Crane (crane) was installed in 2001 and has since become inoperable. Removal of the crane is required. Portions of the crane are located over the spillway. The Contractor shall remove the crane as described below in Section 3.0 Principal Components of Work and 4.0 Protection of Existing Installations. Following removal of the crane, the Contractor shall install and remove Government-furnished stoplogs for operational testing.

The Contractor shall provide all management, supervision, labor, subcontractors, materials, supplies and equipment, and shall plan, schedule, coordinate, and assure effective completion of the work detailed within this SOW.

3.0 Principal Components of Work

The principal components of work include:

A. Remove all crane components, including the crane frame, bridge, hoist, rail, and rail support beams and columns.

1. Connections to concrete decks/piers shall be removed by methods which minimize damage to the concrete. It is anticipated that all anchors embedded in the concrete substructure be flush with the concrete surface after the structure is removed. All concrete is to be left in place.

B. Load, haul, and legally dispose of all materials off site.

1. The Contractor may salvage all materials at their discretion.

C. After removal of the existing crane components, install and remove Government-furnished stoplogs into each of the three (3) spillway gate bays.

1. Stoplogs shall remain in place for one (1) full workday for each gate to allow Government forces to operationally test the radial gates. The day that the stoplogs are left in place shall be during the working week, Monday through Thursday.

2. Only one (1) full set of stoplogs is available and will have to be moved between the gate bays.

3. After all the gate bays have been tested, place the stoplogs back in the storage area near the spillway.

4.0 Protection of Existing Installations

Drawings and photos are included as an attachment to this SOW to show items of existing materials and equipment but may not show all equipment and materials existing at the jobsite. Provide protection for personnel and existing facilities from harm due to the Contractor's operations. Protection shall be subject to approval of the Government. Repair, at Contractor's expense, damage to existing installations due to Contractor's operations or Contractor's failure to provide proper protection. At the Government's option, damage may be repaired by the Government, and the Contractor will be back charged repair costs.

The chain-link fence at the jobsite may be temporarily removed for the duration of the work and replaced upon completion. However, access to the area shall be secured following each shift.

5.0 Use of Site/Site Security

Only authorized contract employees shall be permitted in the facilities. Contractor personnel will be escorted and will not require security clearances. A Reclamation employee must be on-site with the Contractor during performance of work. The Contractor shall comply with all site security requirements under WBR 1452.237-80 Alt III.

The gantry crane is located adjacent to county road which runs across the dam. The contractor’s work shall not require extended closure of the County Road. The contractor is responsible for coordinating and scheduling necessary closures and any traffic control measures. Road closures will not be allowed on weekend or federal holidays. Road closures shall be coordinated with Reclamation 14 days before the closure is to begin.

Contractor staging and parking area will be provided near the crane.

Do not interfere with work of other contractors or the Government in vicinity, or with reservations made by the Government for use of such land.

Site Security Requirements:

A. List of all contractor and subcontractor employees, vehicles and equipment that will be onsite. Provide approved identification information for each employee and vehicle. Update the list for any person or item not previously listed at least 10 days prior to those employees or vehicles arriving at the job site.

1. All contractor and subcontractor employees must be U.S. citizens or possess valid documentation authorizing them to work in the United States.

2. The Government may perform background checks on any or all workers and deny access to any worker.

3. The Government will control access to the worksite to authorized persons with proper identification.

4. In case of emergency, all contractor and subcontractor personnel will follow emergency instructions provided by the Reclamation Representative.

5. All firearms and dangerous weapons are prohibited in federal facilities by all persons not specifically authorized by Title 18, United States Code, Section 930.

Any violations of security requirements and/or restrictions may result in prohibiting contractor and subcontractor access to the federal facility at any time.

6.0 Place of Performance

The work is located at Tiber Dam, which is approximately 20 miles southwest of Chester, Montana in Liberty County. The crane is located at the spillway intake structure near the right abutment. The jobsite is adjacent to a public roadway, however the area around the spillway is closed to the public. See Figures 1 and 2 for location map.

Figure 1: Tiber Dam Spillway Gantry Crane Location Map

Figure 2: Aerial view of the access points, guardrail, and fencing.

7.0 Period of Performance

The contractor shall be required to commence work under this contract within 10 calendar days after the contractor's receipt of the Notice to Proceed (NTP). The contractor shall work diligently and complete the entire work ready for use within 73 calendar days from receipt of the NTP.

On site work is allowed between August 15 and November 1. Work outside these windows may be allowed with Reclamation approval depending on reservoir elevations. Any work outside this designated period shall be arranged and approved prior to scheduling with the Contracting Officer's Representative (COR).

8.0 Work Hours

Work shall be performed Monday through Thursday from 7:00 AM to 5:30 PM. Any work outside the designated hours shall be arranged and approved prior to scheduling with the COR.

Alternate work schedules may be approved, including Friday and Saturday work, with written notice provided 7 working days in advance when proposed work is contemplated outside of the normally authorized work hours of Monday through Thursday 7:00 a.m. to 5:30 p.m.

No night work will be allowed. No work during Federal holidays or Sundays will be allowed. For the list of Federal holidays see https://www.opm.gov/policy-data-oversight/pay-leave/federal-holidays/#url=2026.

9.0 Safety

The Contractor shall comply with all federal, state and local laws and standards as well as Reclamation Safety and Health Standards (RSHS). The Contractor should plan to download or view the electronic version of the RSHS manual at no charge from the Bureau of Reclamation web site at: https://www.usbr.gov/ssle/safety/RSHS/rshs.html

The Contractor is required to furnish safety documents to the Government per the Required Submittal Number (RSN) Table under Section 10 Required Submittal Numbers (RSNs) below. The required safety documents are a written safety plan (site specific) and a job hazard analysis. These documents will be approved by the Government, prior to the start of onsite work.

RSHS Appendix A and Appendix B provide excellent descriptions of how to write a safety plan and how to write a job hazard analysis.

Some specific safety requirements applicable to this work are a good starting point for a safety plan and job hazard analysis is provided as follows:

Safety Plan sample items: Morning safety meetings, on site point of contact in case of emergency, general requirement for use of PPE, etc.

Job Hazard Analysis sample items: Care while climbing ladders to access the crane (utilizing the 3-points of contact with the ladder at all times), proper lifting methods when rigging, consistent use of PPE such as hard hat, steel toed boots, hearing protection, safety glasses, protective clothing or uniform, and gloves. Care while transiting from the parking area to the crane and back along roadway.

10.0 Required Submittals Numbers (RSNs)

A. Submittal review will require 21 days for review of each submittal or resubmittal, unless otherwise specified.

B. Time required for review of each submittal or resubmittal begins when complete sets of materials required for a particular RSN are received.

C. RSNs shall be submitted electronically via email to the following as designated on the RSN Table below:

1. Contracting Officer (CO): charlene_maurer@ios.doi.gov
2. COR: jnoland@usbr.gov

RSN Table

RSN	Clause Or Title	Submittals Required	Due date or Delivery Time	Send to:	Format
1	Alternative Payment Protections (52.228-13)	Alternative Payment Protection	10 days after award	CO	(1) Electronic
2	Additional Bond Security (52.228-2)	Additional Bond Security	10 days after award	CO	(1) Electronic
3	Insurance – Work on Government installations (1452.228-70)	1) Written certification that the required insurance has been obtained 2) Current certification of insurance for each subcontractor	Submitted and accepted prior to start of onsite work	CO	(1) Electronic
4	Liability Insurance (1452.228-70)	Acceptable Certificate of Liability Insurance	Submitted and accepted prior to start of work under the contact	CO	(1) Electronic
5	Reporting Executive Compensation and First-Tier Subcontract Awards (52.204-10)	Certification that executive compensation and subcontract awards were reported	Within 10 days of each report being submitted	CO	(1) Electronic
6	Labor Standards Data (52.222-11)	1) List of subcontractors 2) Statement and Acknowledgement Form (SF-1413) for each subcontract	14 days after award	CO & COR	(1) Electronic
7	Payrolls and Basic Records (52.222-8)	Copies of all payrolls	Weekly for each week of contract performance	CO & COR	(1) Electronic **Encrypted**
8	Site Security (WBR 1452.237-80 Alt III)	1) List of all contractor and subcontractor employees 2) List of vehicles and equipment to be onsite	10 days prior to onsite work	COR	(1) Electronic **Encrypted**
9	Job Hazard Analysis (JHA)	Contractor JHA identifying work hazards and work safety plan	Before beginning onsite work	COR	(1) Electronic
10	Gantry Crane Removal	Plan for removal of the crane, to include all proposed equipment, materials, and methods for removal, including dismantling plan if applicable.	Approved before beginning onsite work	COR	(1) Electronic
11	Mobile Crane Safety Crane Operator and critical lift plan if required	Mobile Crane Safety Crane Operator crane inspection certifications, and critical lift plan if required	Approved before beginning onsite work	COR	(1) Electronic

11.0 Government Points of Contact

Charlee Maurer, Contracting Officer, charlene_maurer@ios.doi.gov
Sydney Oakes, Contract Specialist, sydney_oakes@ios.doi.gov
Jacob Noland, Contracting Officer Representative, jnoland@usbr.gov

12.0 Site Visit

The Revolutionary Federal Acquisition Regulation (FAR) Overhaul (RFO) clauses at RFO 52.236-2, Differing Site Conditions, and RFO 52.236-3, Site Investigations and Conditions Affecting the Work, will be included in any contract awarded as a result of this solicitation. Accordingly, offerors or quoters are urged and expected to inspect the site where the work will be performed. An organized site visit has been scheduled for July 8th, 2026, at 10:00 AM MDT. Participants will meet at 882 Sanford Park Road, Chester, Montana, 59522. The point of contact for the organized site visit is Jacob Noland, Contracting Officer Representative.

13.0 Drawings and Photos

The drawings and photos for this requirement are attached below.

7-1289 (2-80)
Water and Power

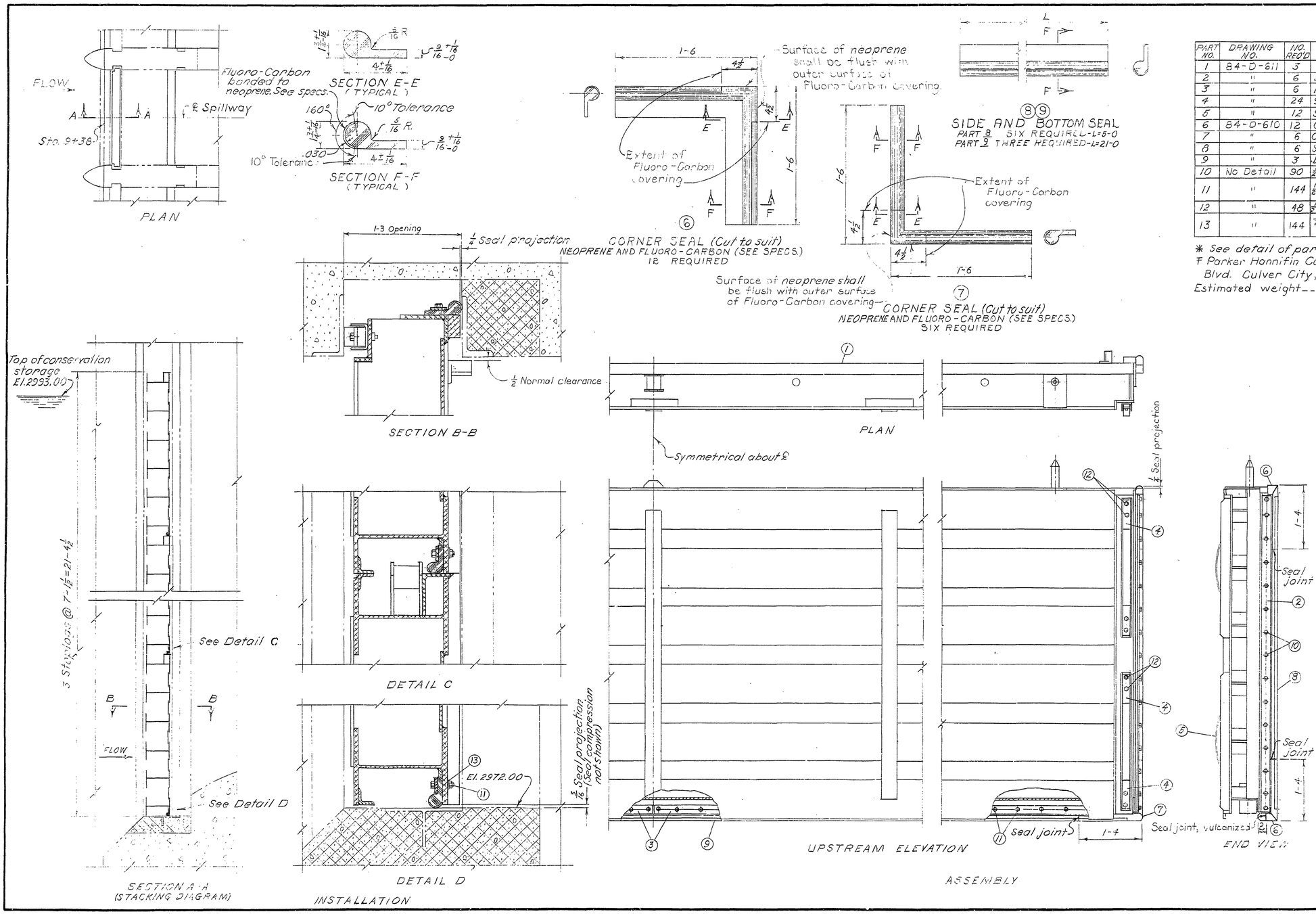

LIST OF PARTS

PART NO.	DRAWING NO.	NO. REQ'D	DESCRIPTION	*MATERIAL
1	84-D-611	3	Log section	Aluminum
2	"	6	Side seal clamp	
3	"	6	Bottom seal clamp	
4	"	24	Spring keeper	
5	"	12	Spring	Stainless steel
6	84-D-610	12	Corner seal	Neoprene and fluoro-carbon. See specs.
7	"	6	Corner seal	
8	"	6	Side seal	
9	"	3	Bottom seal	
10	No Detail	90	1/2-13UNC-2A x 1 1/2 Hex h.d. cap screw.	Aluminum
11	"	144	1/8 x 2 1/4 Hex hd. bolt with hex nut.	
12	"	48	3/8 x 3 Hex hd. bolt with hex nut.	
13	"	144	1/2" Sealing washer, thread seal by Parker Seal Company ‡ or equal	Cadmium plated and synth. rubber

* See detail of parts for material specification
‡ Parker Hannifin Corp., O-seal Division, 10567 Jefferson Blvd. Culver City, CA. 90230
Estimated weight ---------- 10,050 lbs.

NOTE

Joints of seals, unless otherwise noted, shall be carefully fitted and closely butted.

DESIGN CRITERIA

Maximum design head ---------- 20.3 ft.

LIST OF DRAWINGS

STOPLOGS
INSTALLATION-ASSEMBLY-
LIST OF PARTS-SEALS ---------- 84-D-610
LOG SECTION-CLAMPS-SPRING-KEEPER ---- 84-D-611

REFERENCE DRAWINGS

SPILLWAY REHABILITATION:
CREST STRUCTURE ---------- 84-D-523
STOPLOG SEATS AND GUIDES:
INSTALLATION-ANCHOR BOLT SETTING-
LIST OF PARTS ---------- 84-D-541
STOPLOG LIFTING BEAM:
INSTALLATION-ASSEMBLY-DETAILS-
LIST OF PARTS ---------- 84-D-612

ALWAYS THINK SAFETY

UNITED STATES
DEPARTMENT OF THE INTERIOR
WATER AND POWER RESOURCES SERVICE
PICK-SLOAN MISSOURI BASIN PROGRAM
MARIAS DIVISION-LOWER MARIAS UNIT-MONTANA

TIBER DAM
SPILLWAY REHABILITATION
STOPLOGS
INSTALLATION-ASSEMBLY-LIST OF PARTS-SEALS

DESIGNED L.A. Cragg TECHNICAL APPROVAL E.J. Trout
DRAWN L.A. Cragg SUBMITTED J.C. Wedge
CHECKED R.L. Dwyer APPROVED Ernest Zerbe
CHIEF, MECHANICAL BRANCH

DENVER, COLORADO FEB. 3, 1982 SHEET 1 OF 2 | 84-D-610

7-1289 (2-80)
Water and Power

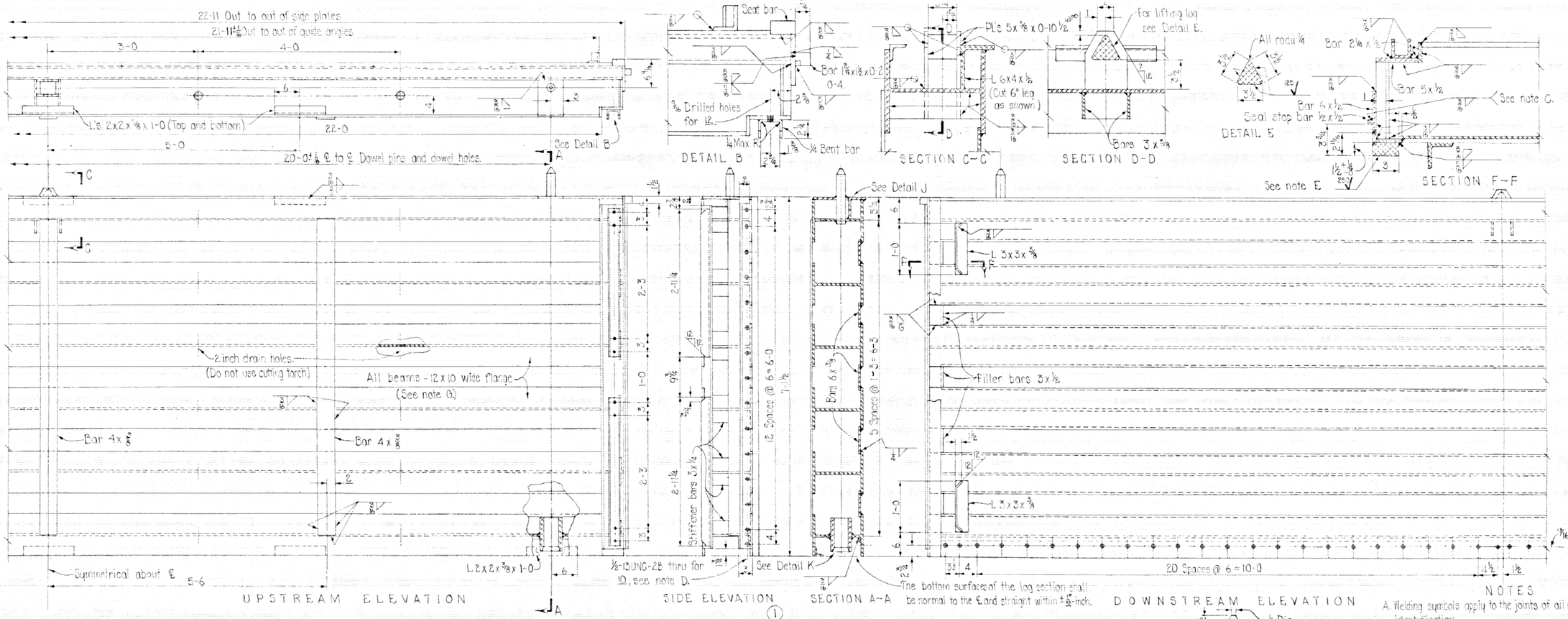

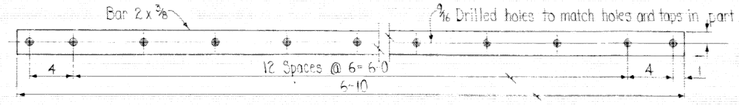

② SIDE SEAL CLAMP
ALUMINUM ALLOY 6061-T6
SIX REQUIRED

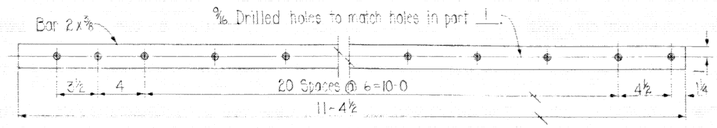

③ BOTTOM SEAL CLAMP
ALUMINUM ALLOY 6061-T6
SIX REQUIRED

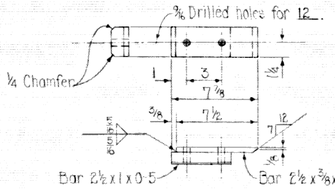

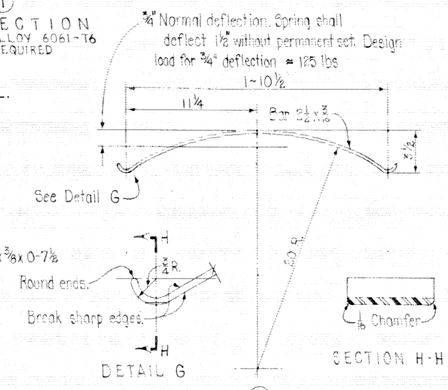

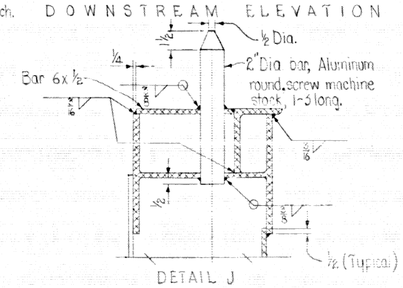

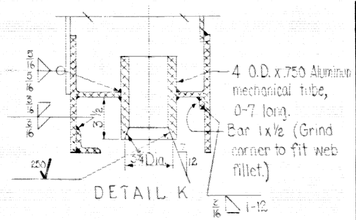

NOTES

A. Welding symbols apply to the joints of all members of similar identification.
B. Beams shall have ends cut square before assembling.
C. Weld seal stop bars after machining seat bars.
D. Locate holes and taps after tolerances have been obtained.
E. Each log section shall be suspended by the lifting lug and while suspended the face of the seat bar on both sides of the stoplog shall lie in a common plane within ±1/16". Min. thickness of the seat bar shall be maintained by using a bar of sufficient thickness to machine down to the required tolerances.
F. Filler bars shall be flush with downstream face of flanges.
G. All beams shall be continuous with no splices.

ALWAYS THINK SAFETY

UNITED STATES
DEPARTMENT OF THE INTERIOR
WATER AND POWER RESOURCES SERVICE
PICK-SLOAN MISSOURI BASIN PROGRAM
MARIAS DIVISION - LOWER MARIAS UNIT - MONTANA

TIBER DAM
SPILLWAY REHABILITATION
STOPLOGS
LOG SECTION, CLAMPS, SPRING KEEPER

DESIGNED E.J. Campana TECHNICAL APPROVAL E.J. Trout
DRAWN L.L. Crook SUBMITTED J.C. Wadge
CHECKED R.L. Lund APPROVED [illegible]
DENVER, COLORADO FEBRUARY 5, 1980 84-11-511

U.S. GOVERNMENT PRINTING OFFICE: 1980-676-067

21" x 36"

7-1289 (2-80)
Water and Power

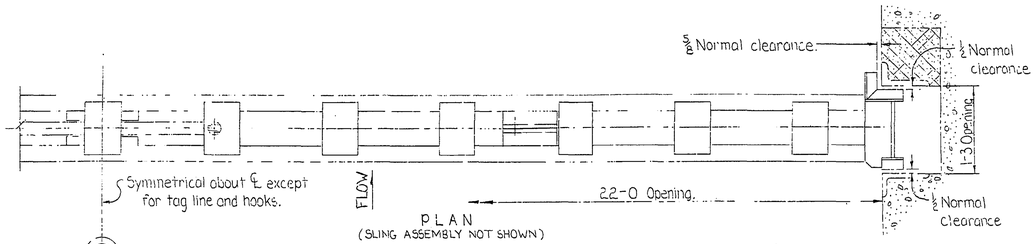

PLAN
(SLING ASSEMBLY NOT SHOWN)

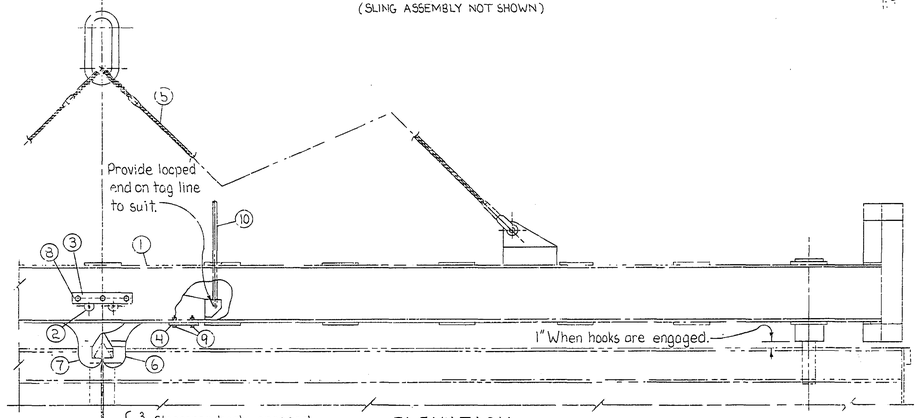

ELEVATION

3/16 Clearance, hooks engaged.
3/8 Clearance, hooks free.
4 1/2 Min. clearance, hooks open.

INSTALLATION-ASSEMBLY

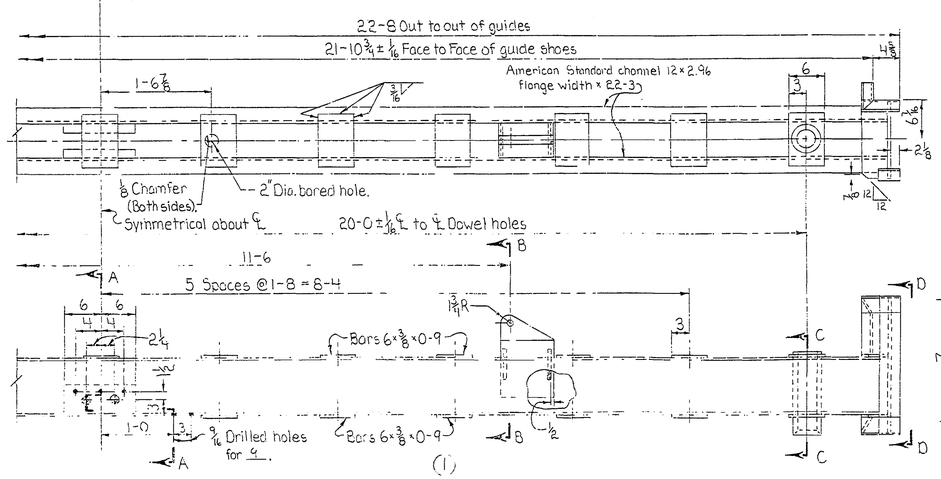

(1)
LIFTING BEAM
ALUMINUM ALLOY 6061 T-6
ONE REQUIRED

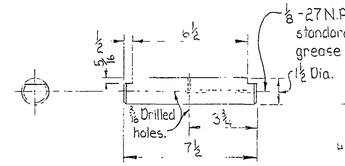

(2)
PIN
C.F. STEEL
TWO REQUIRED

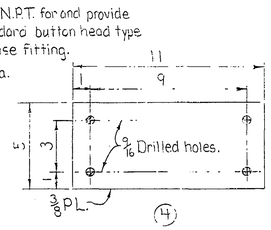

(4)
STOP
ALUMINUM ALLOY 6061-T6
TWO REQUIRED

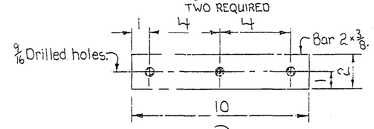

(3)
KEEPER
ALUMINUM ALLOY 6061-T6
TWO REQUIRED

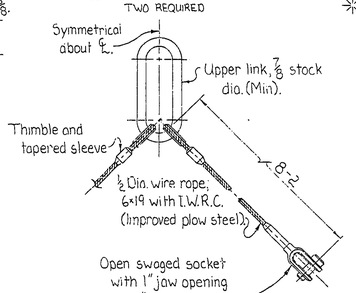

(5)
SLING
STEEL
ONE REQUIRED

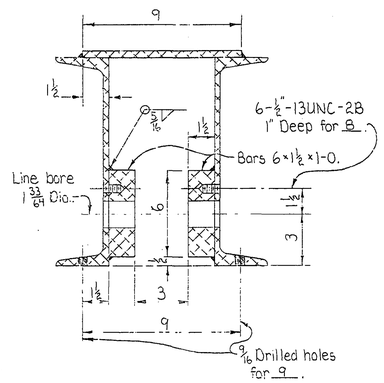

SECTION A-A

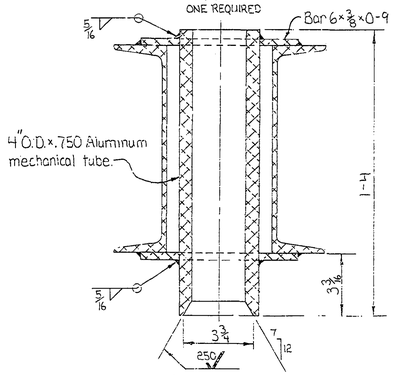

SECTION C-C

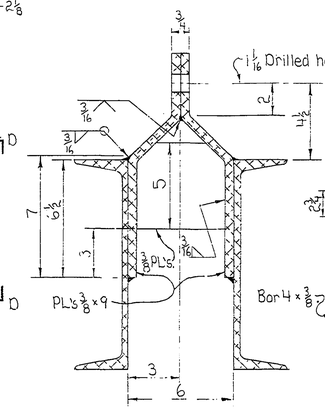

SECTION B-B

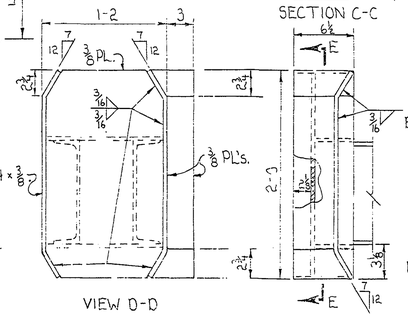

VIEW D-D

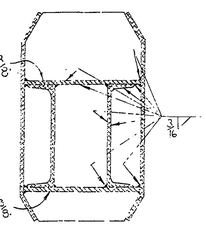

SECTION E-E

LIST OF PARTS

PART NO.	DRAWING NUMBER	NO. REQ'D.	DESCRIPTION	MATERIAL
1	84-D-612	1	Lifting beam	Aluminum
2	"	2	Pin	C.F. Steel
3	"	2	Keeper	Aluminum
4	"	2	Stop	
5	"	1	Sling	Steel
6	84-D-613	1	Hook	Structural
7	"	1	Hook	Steel
8	No detail	6	1/2-13UNC-2A×1 Hex. hd. cap screw.	Aluminum
9	"	8	1/2-13UNC-2A×1 3/4 Hex. hd. bolt with hex. nut and beveled washer.	
10	"	1	65 Foot tag line (1000 pound min. breaking strength).	Nylon

*-See detail of part for material specification.

Estimated weight
Aluminum ---------- 515 lbs.
Steel ---------- 145 lbs.

NOTES

Welding symbols apply to the joints of all members of similar identification.
All fillet welds shall be returned.
Lifting beam designed for a safe working load of 4000 lbs.
Channels for lifting beam, part 1, shall be made in one piece, with no splices.

LIST OF DRAWINGS

STOPLOG LIFTING BEAM
INSTALLATION ASSEMBLY-DETAILS-LIST OF PARTS ---------- 84-D-612
HOOKS ---------- 84-D-613

REFERENCE DRAWINGS

SPILLWAY REHABILITATION
CREST STRUCTURE ---------- 84-D-523
STOPLOGS
INSTALLATION - ASSEMBLY - LIST OF PARTS - SEALS ---------- 84-D-610

ALWAYS THINK SAFETY

UNITED STATES
DEPARTMENT OF THE INTERIOR
WATER AND POWER RESOURCES SERVICE
PICK-SLOAN MISSOURI BASIN PROGRAM
MARIAS DIVISION - LOWER MARIAS UNIT - MONTANA

TIBER DAM
SPILLWAY REHABILITATION
STOPLOG LIFTING BEAM
INSTALLATION-ASSEMBLY-DETAILS-LIST OF PARTS

DESIGNED J. N. Vandeveer TECHNICAL APPROVAL E. J. Trout
DRAWN J. N. Vandeveer SUBMITTED J. C. Hodge
CHECKED B. L. Brush APPROVED [signature]
CHIEF, MECHANICAL BRANCH

DENVER, COLORADO FEBRUARY 3, 1982 SHEET 1 OF 2 | 84-D-612

☆U.S. GOVERNMENT PRINTING OFFICE: 1980-679-087

21" x 36"

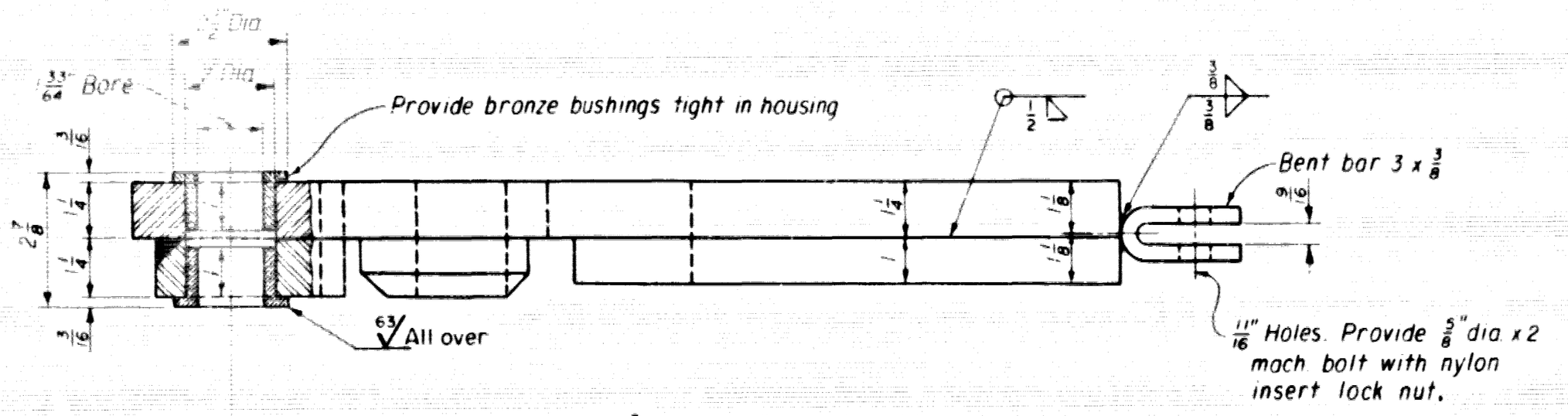

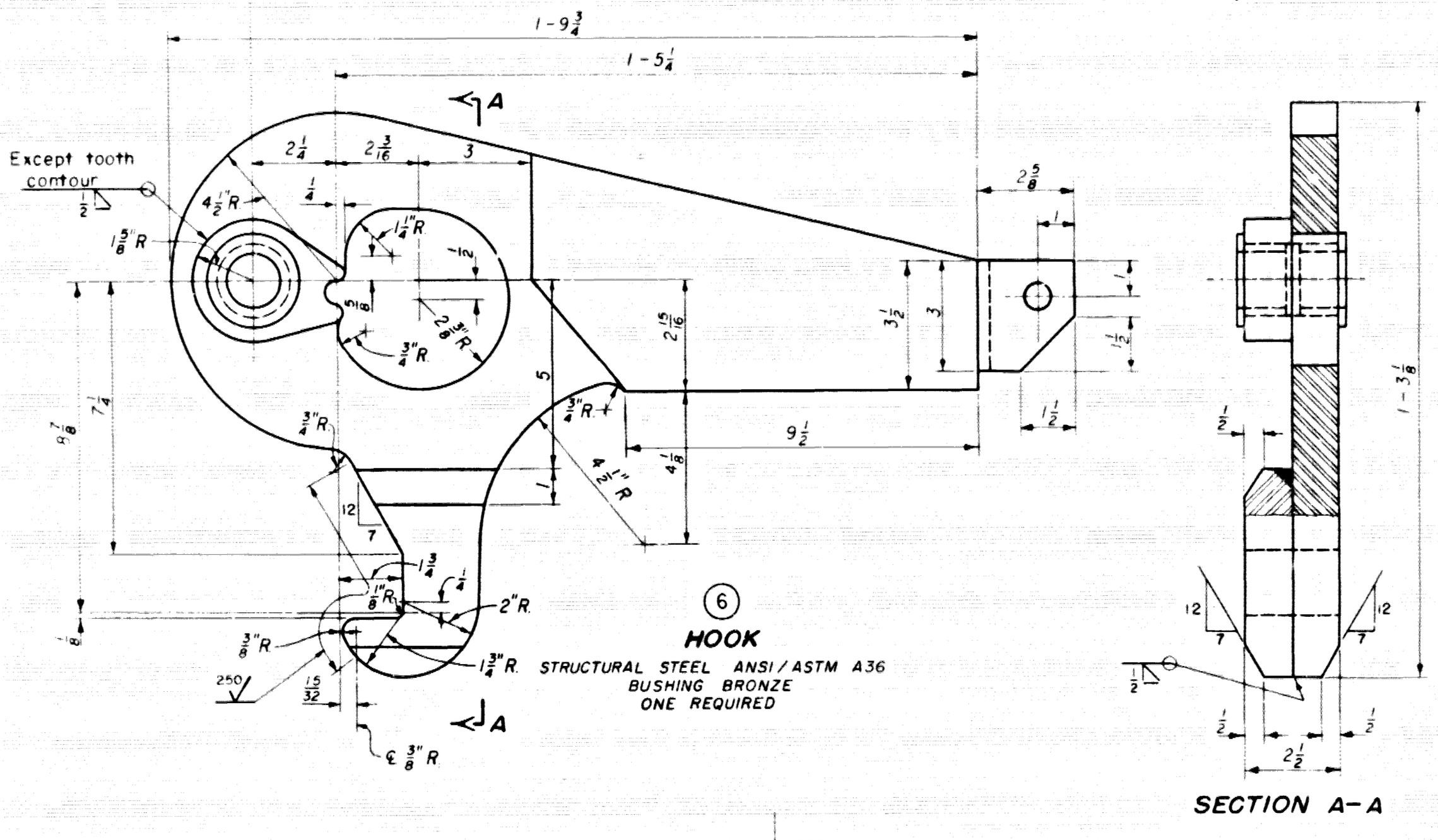

6

HOOK

STRUCTURAL STEEL ANSI/ASTM A36
BUSHING BRONZE
ONE REQUIRED

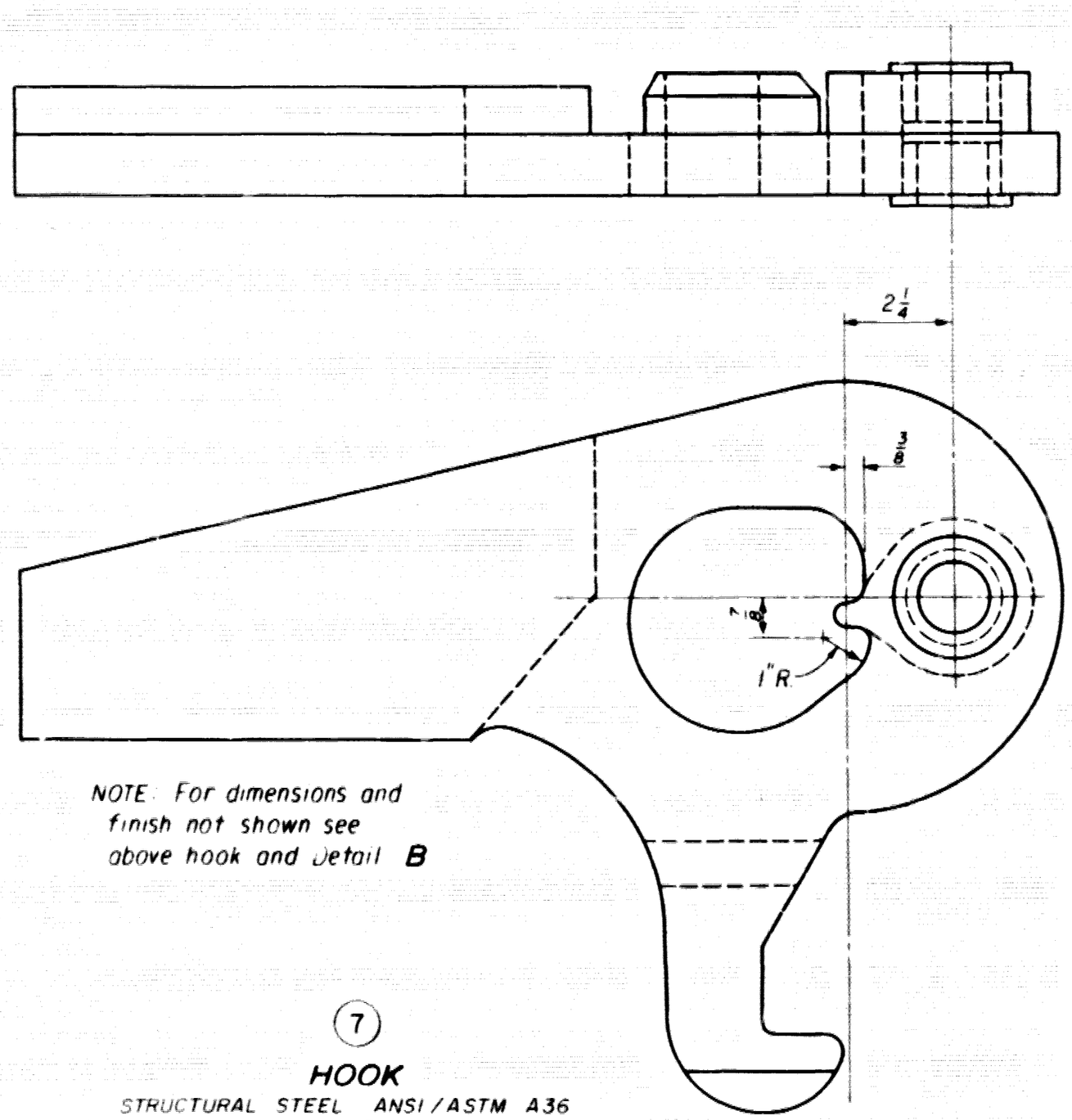

NOTE: For dimensions and finish not shown see above hook and Detail B

7

HOOK

STRUCTURAL STEEL ANSI/ASTM A36
BUSHING BRONZE
ONE REQUIRED

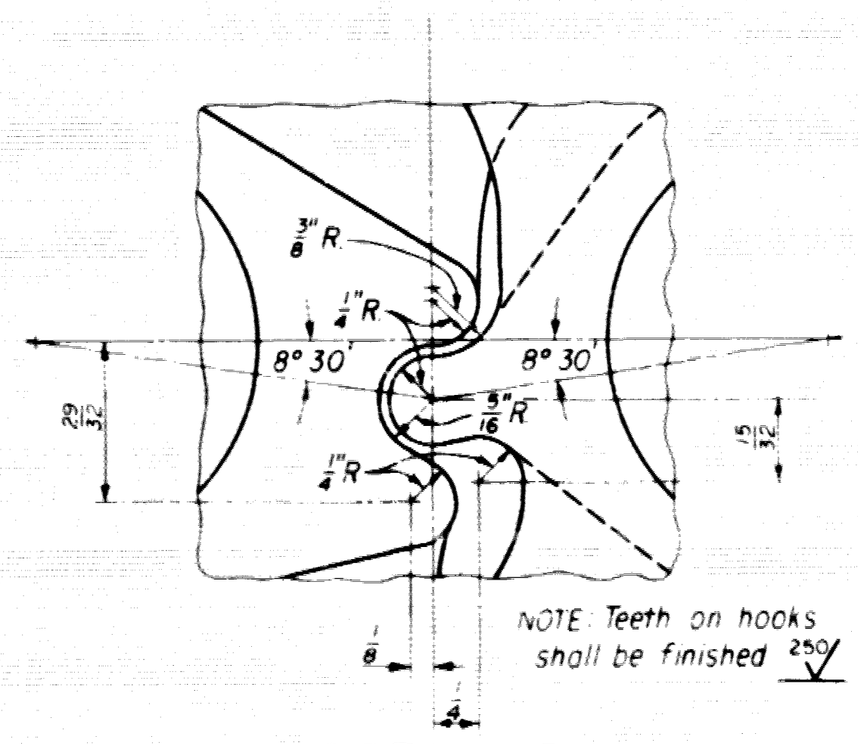

DETAIL B

ALWAYS THINK SAFETY

UNITED STATES
DEPARTMENT OF THE INTERIOR
BUREAU OF RECLAMATION
PICK-SLOAN MISSOURI BASIN PROGRAM
MARIAS DIVISION - LOWER MARIAS UNIT-MONTANA

TIBER DAM

SPILLWAY REHABILITION

STOPLOG LIFTING BEAM HOOKS

DESIGNED J. W. Vandeveer — TECHNICAL APPROVAL E. J. Traub
DRAWN [illegible] — SUBMITTED [illegible]
CHECKED R. S. Sund — APPROVED [illegible]
CHIEF, MECHANICAL BRANCH

DENVER, COLORADO — FEB. 3, 1982 — SHEET 2 OF 2

84-D-613

84-600-407

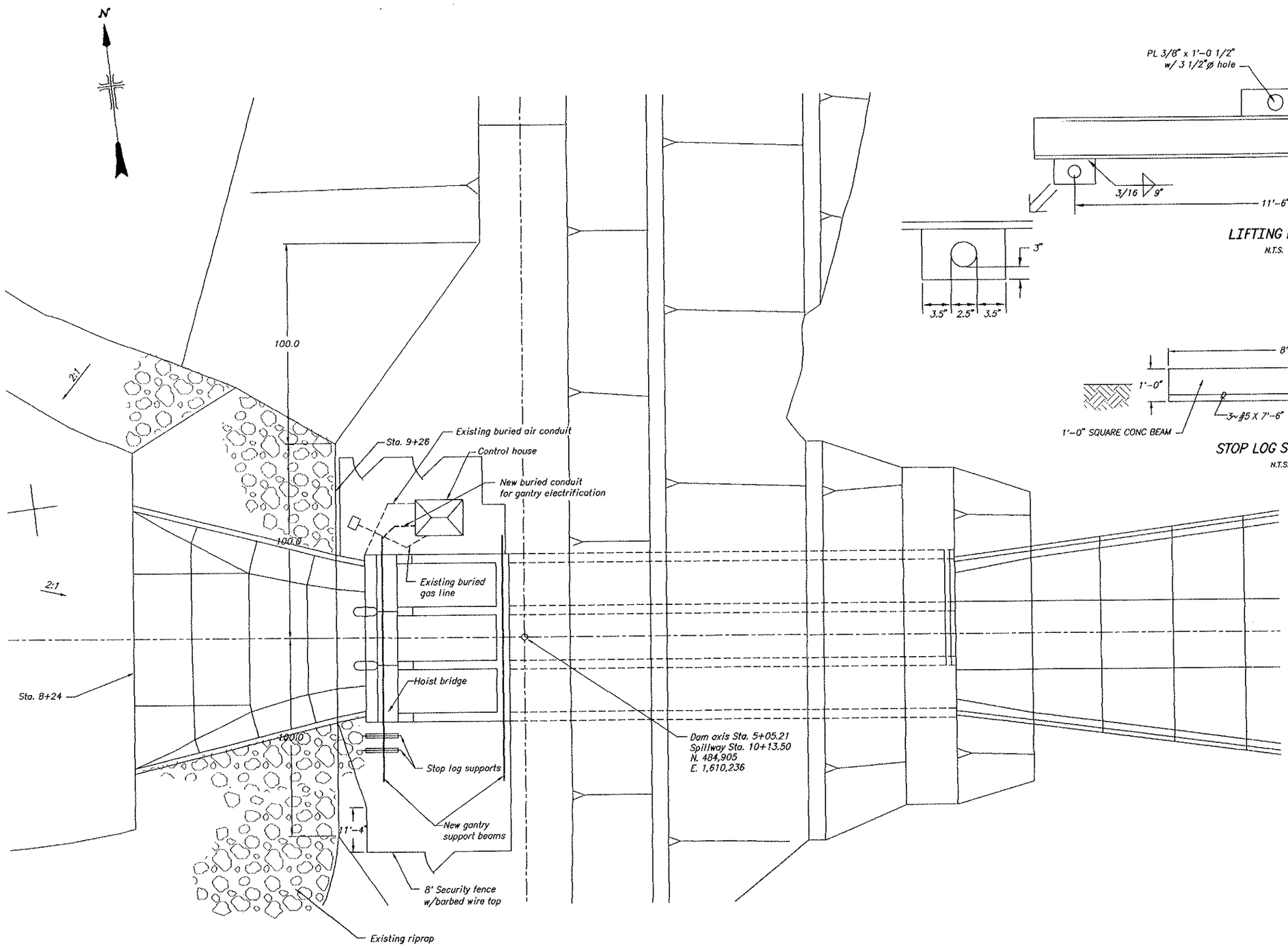

PLAN

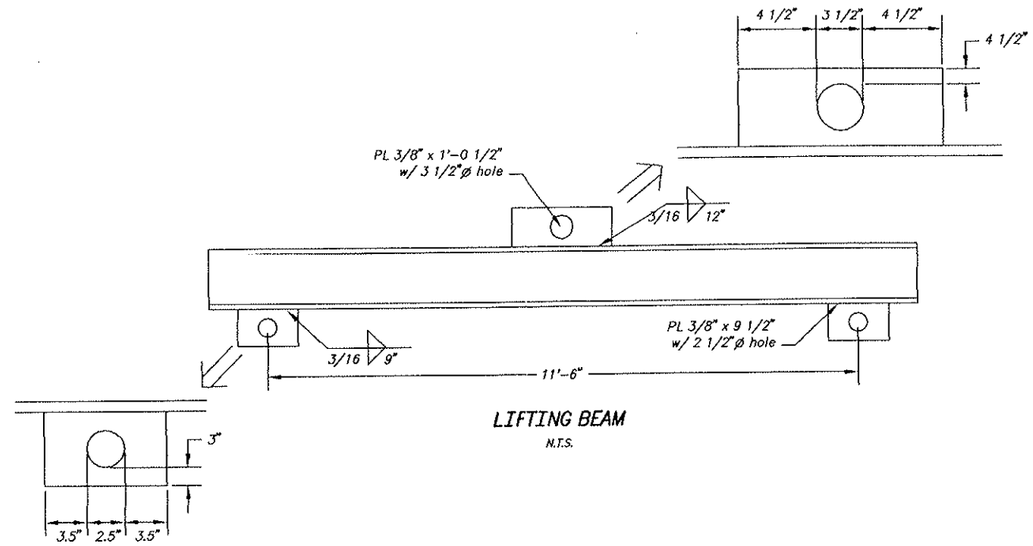

LIFTING BEAM

N.T.S.

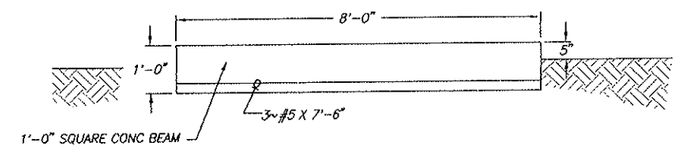

STOP LOG SUPPORTS

N.T.S.

REV NO	DATE	DESCRIPTION
1	10/23/01 600-KRG	AS-BUILT. ADD STOP LOG SUPPORTS & SECURITY FENCING. CHANGED SCALE SIZE. ADDED LIFTING BEAM.

ALWAYS THINK SAFETY

UNITED STATES
DEPARTMENT OF THE INTERIOR
BUREAU OF RECLAMATION
PICK-SLOAN MISSOURI BASIN PROGRAM
MARIAS DIVISION-LOWER MARIAS UNIT-MONTANA

TIBER DAM

SPILLWAY GATE REFURBISHMENT-TIBER DAM SPILLWAY

GANTRY LOCATION

DESIGNED G. BONE — TECH. APPROVAL SARCI BONE
DRAWN ENGINEERING SUPPORT — SUBMITTED GARY BONE
CHECKED L.K. LALLUM — APPROVED L.D. ASNER

CADD SYSTEM	CADD FILENAME	DATE AND TIME PLOTTED
AutoCAD 2000 i	0000007HELD.DWG	12/8/2000 10:17 AM
BILLINGS, MONTANA 10/2000	SHEET 1 OF 1	84-600-407

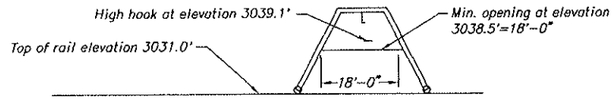

END VIEW OF WEST GANTRY END FRAME

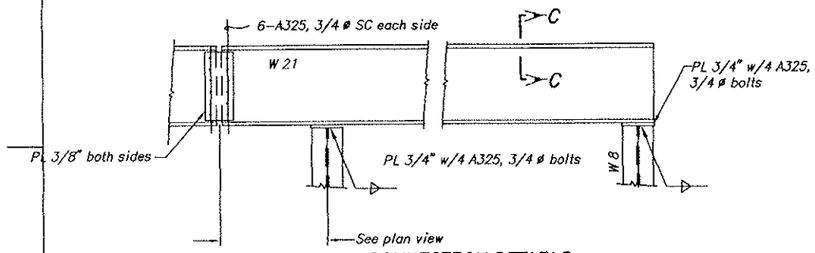

CONNECTION DETAILS

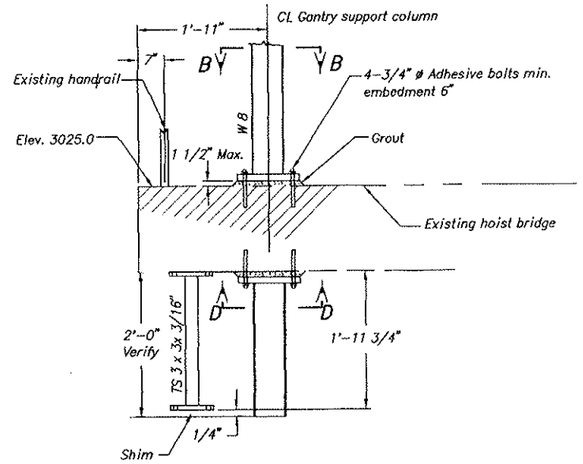

THREE LOCATIONS

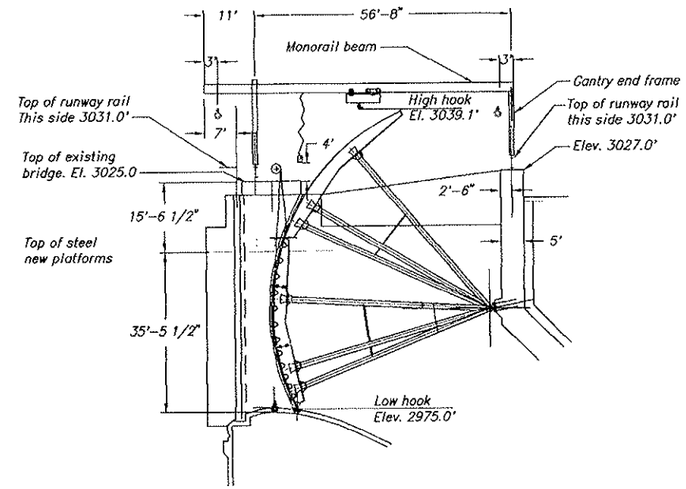

SECTION PARALLEL TO MONORAIL BEAM

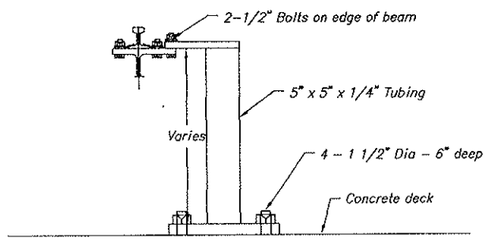

LATERAL SUPPORT COLUMN

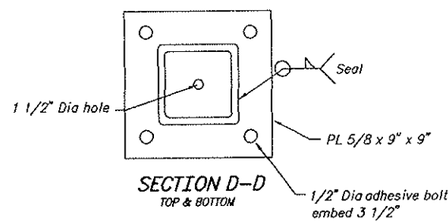

SECTION D-D
TOP & BOTTOM

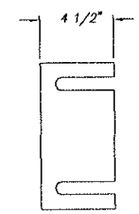

SHIMS

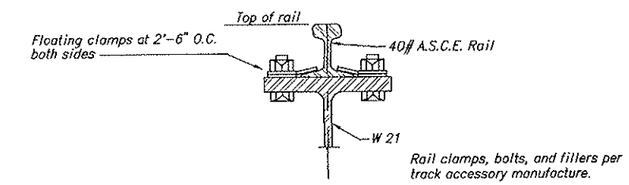

SECTION C-C

GANTRY SUPPORT COLUMN

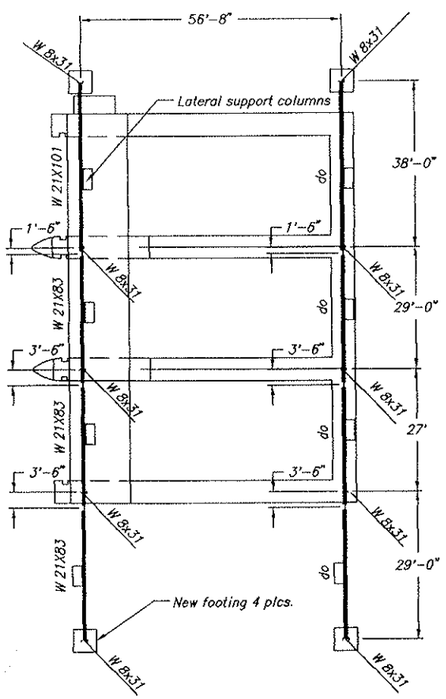

PLAN VIEW GANTRY SUPPORT

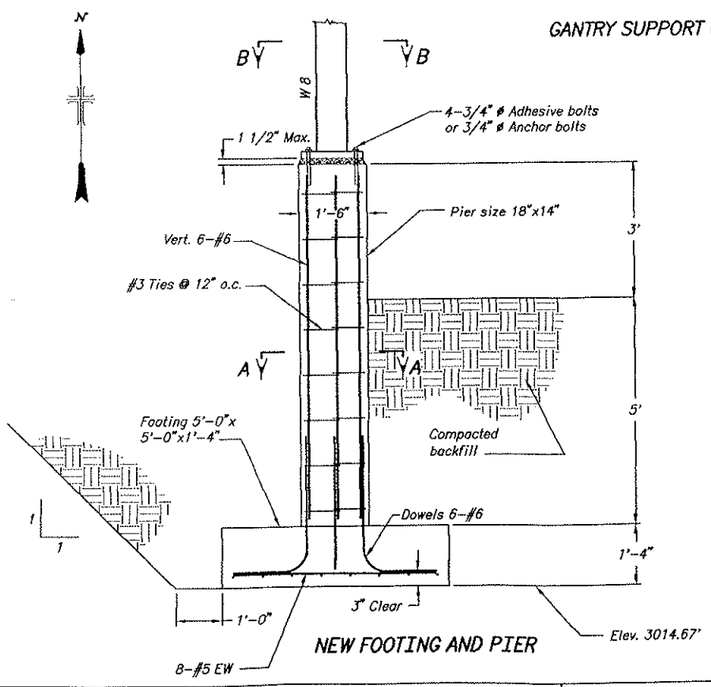

NEW FOOTING AND PIER

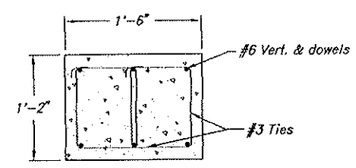

SECTION A-A

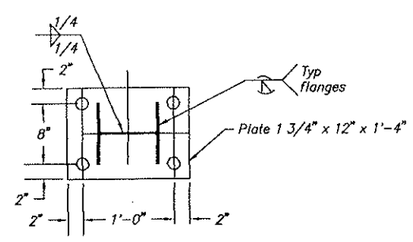

SECTION B-B

NOTE

1. See drawing 84-600-407 for gantry crane orientation.
2. Column to concrete adhesive bolts and / or anchor bolts shall be stainless steel, and consist of leveling nut with flat washer under the base plate and flat washer, nut, and locking nut above base plate. All hardware for column to concrete connection shall be stainless steel.
3. The contractor shall verify existing conditions prior to the fabrication of the structural steels.

REV NO		
1	10/23/01 600-KRG	AS-BUILT. ADD LATERAL AND HOIST DECK SUPPORT COLUMNS CHANGE TOP OF RUNWAY US SIDE & HIGH HOOK ON CRANE.

ALWAYS THINK SAFETY

UNITED STATES
DEPARTMENT OF THE INTERIOR
BUREAU OF RECLAMATION
PICK-SLOAN MISSOURI BASIN PROGRAM
MARIAS DIVISION - LOWER MARIAS UNIT - MONTANA

TIBER DAM

SPILLWAY GATE REFURBISHMENT-TIBER DAM SPILLWAY

GANTRY CRANE DETAILS

DESIGNED G. BONE — TECH. APPROVAL GARY BONE
DRAWN ENGINEERING SUPPORT — SUBMITTED GARY BONE
CHECKED L.K. LAUUM — APPROVED L.D. ASHER

CADD SYSTEM	CADD FILENAME	DATE AND TIME PLOTTED
AutoCAD 2000 1	0000070Y.dwg	12/15/2000 2:18 PM
BILLINGS, MONTANA 09/2000	SHEET 1 OF 1	84-600-408

7-1289 (7-72)
Bureau of Reclamation

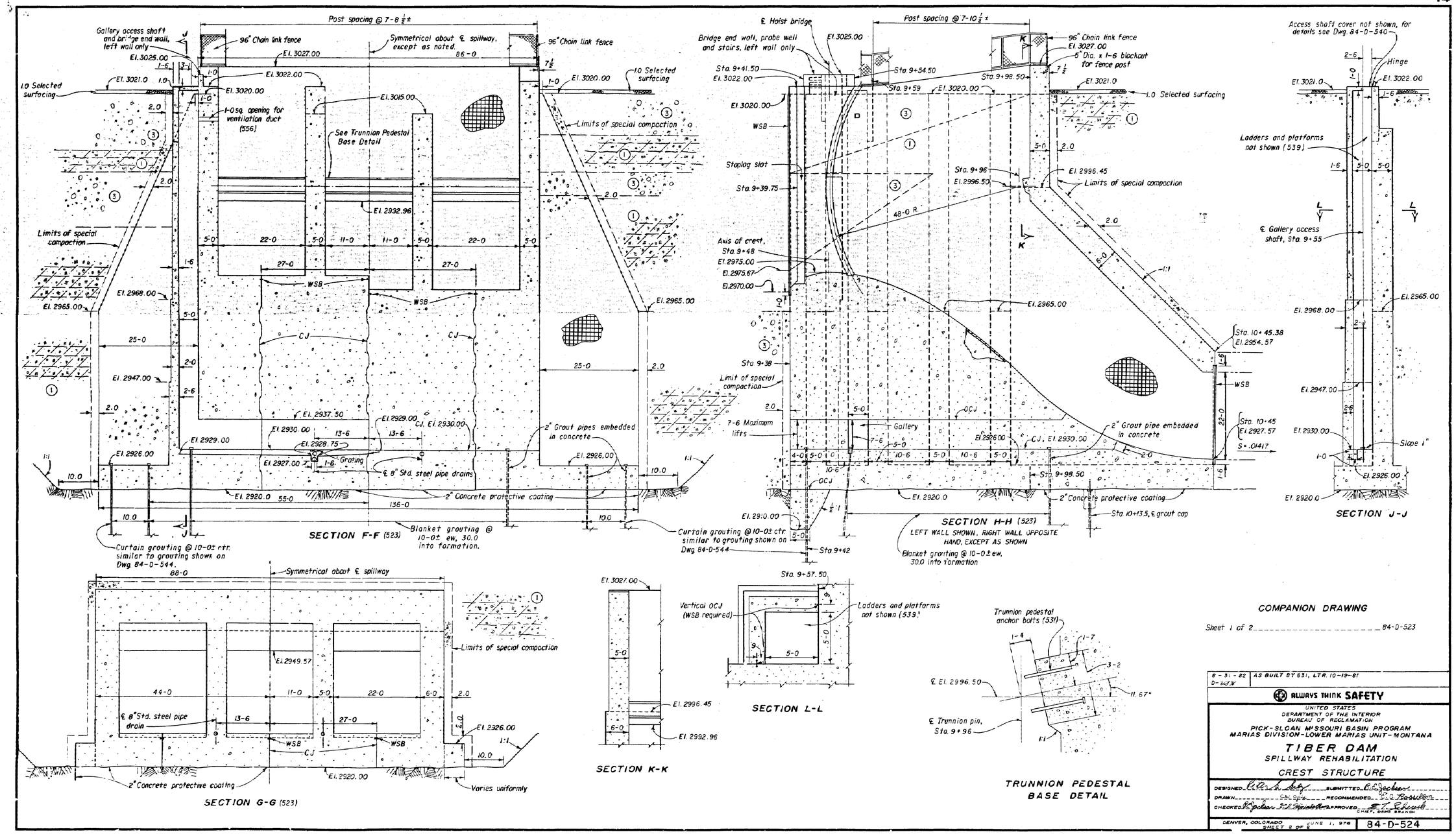

COMPANION DRAWING

Sheet 1 of 2 _____ 84-D-523

8-31-88	AS BUILT BY 631, LTR. 10-19-81
D-[illegible]	

ALWAYS THINK SAFETY

UNITED STATES
DEPARTMENT OF THE INTERIOR
BUREAU OF RECLAMATION
PICK-SLOAN MISSOURI BASIN PROGRAM
MARIAS DIVISION-LOWER MARIAS UNIT-MONTANA

TIBER DAM

SPILLWAY REHABILITATION

CREST STRUCTURE

DESIGNED [illegible] SUBMITTED R.E. Jackson
DRAWN [illegible] RECOMMENDED [illegible]
CHECKED [illegible] APPROVED [illegible] CHIEF, DAMS BRANCH

DENVER, COLORADO JUNE 1, 1976 SHEET 2 OF 2

84-D-524

C-507

21" x 36"

PHOTO LOG

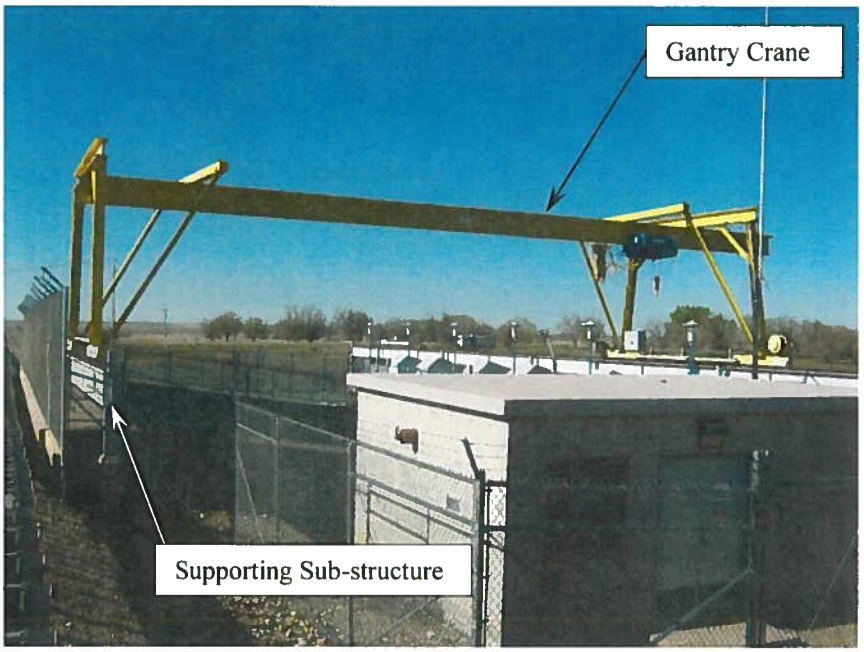

Photo #1, 05/20/2015: (*Photo by Gary Grassel, Tiber Dam – Overall Gantry Crane System*). Photo represents the overall spillway region looking to the south.

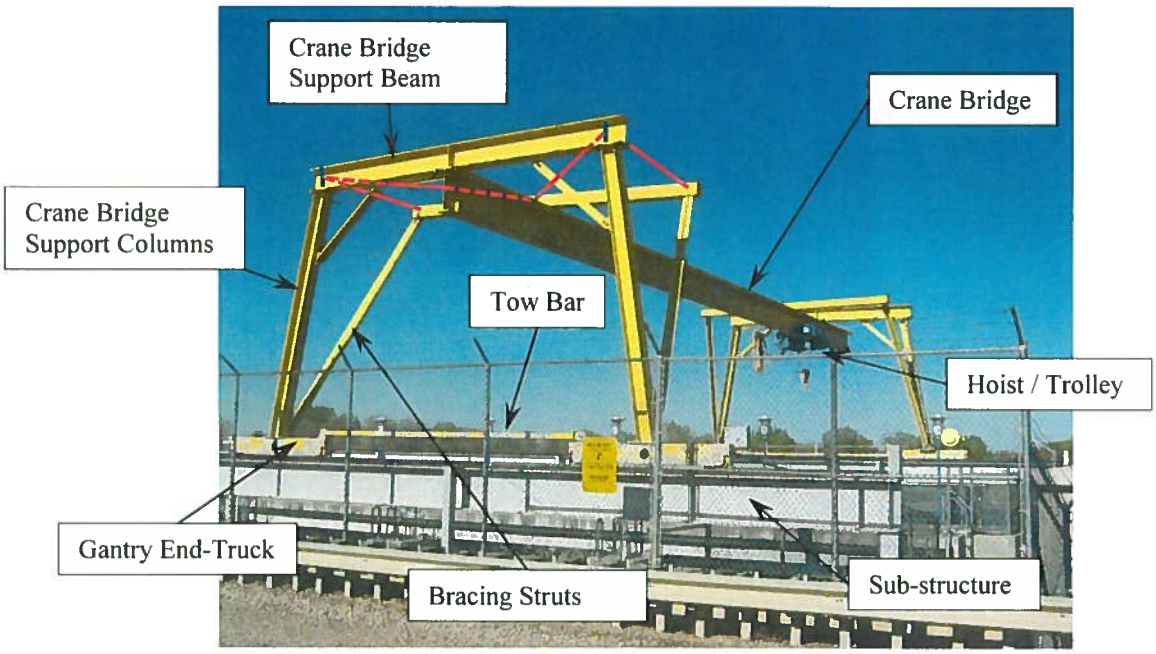

Photo #2, 05/20/2015: (*Photo by Gary Grassel, Tiber Dam – Overall Gantry Crane System*). Photo shows the overall Gantry Crane System looking west. Red lines indicated on east end of frame system represent members I would suggest to be in place at both ends for a more stable system.

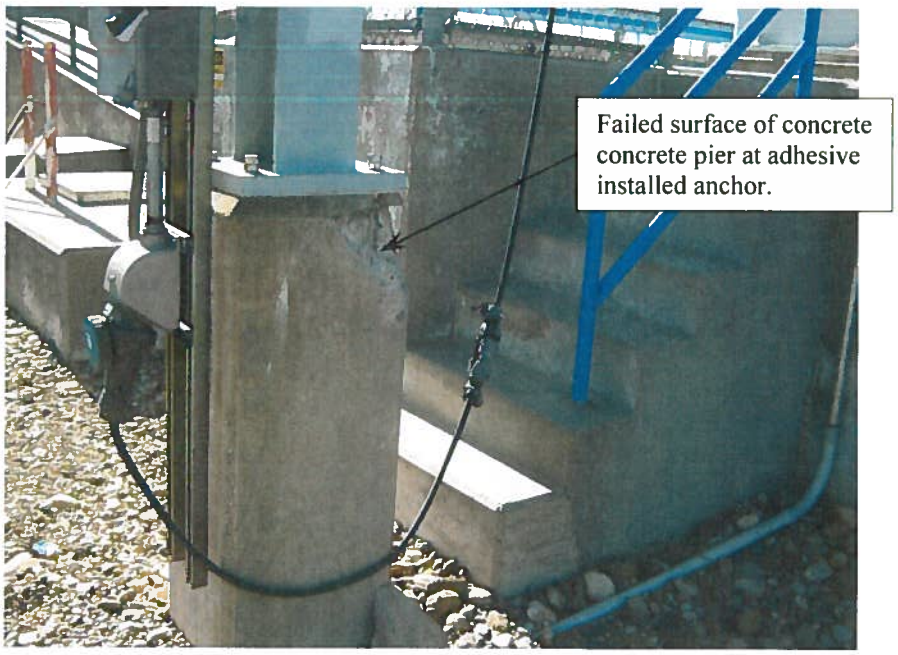

Photo #3, 05/20/2015: (*Photo by Gary Grassel, Northwest Concrete Pier*).
Photo indicates concrete pier failure at adhesive installed anchor. *(Looking East)*

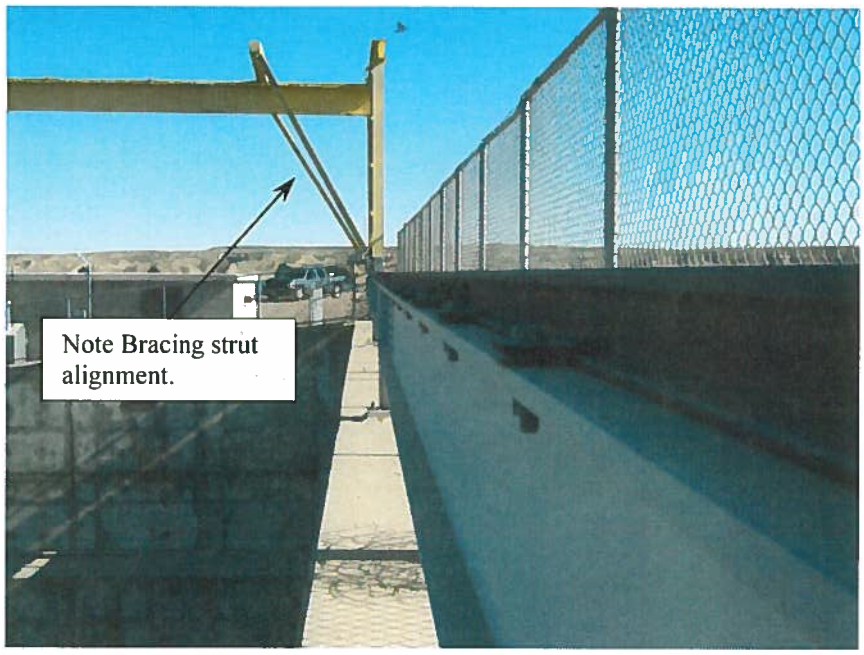

Photo #4, 05/20/2015: (*Photo by Gary Grassel, East Gantry Crane System*).
Photo illustrates position of bracing strut and represents a non-parallel frame configuration.
(Looking North)

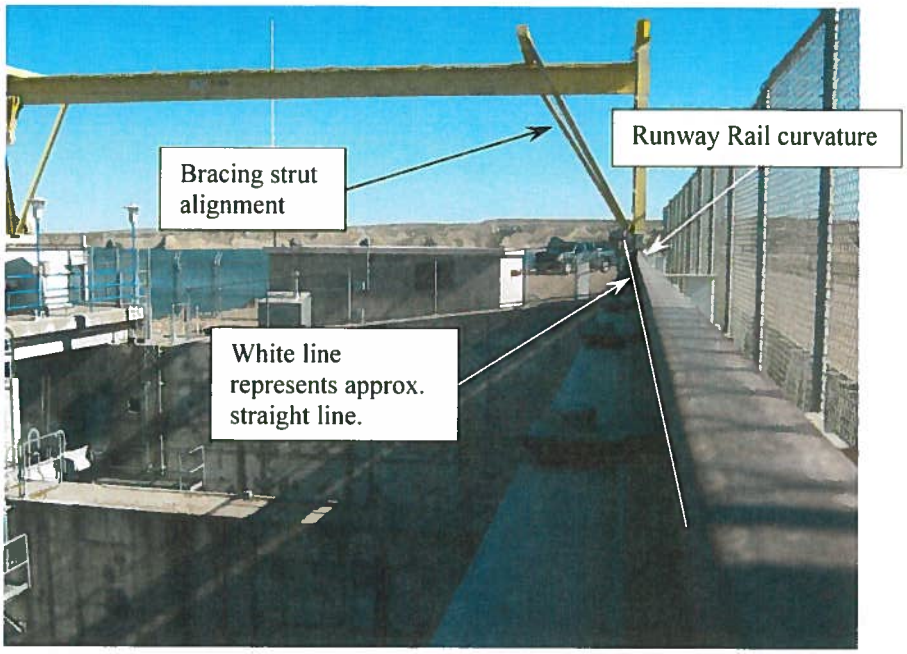

Photo #5, 05/20/2015: (*Photo by Gary Grassel, Tiber Dam – Gantry Crane System*). Photo illustrates position of bracing strut and represents a non-parallel frame configuration. Also note the curved sweep in Gantry runway rail. *(Looking North)*

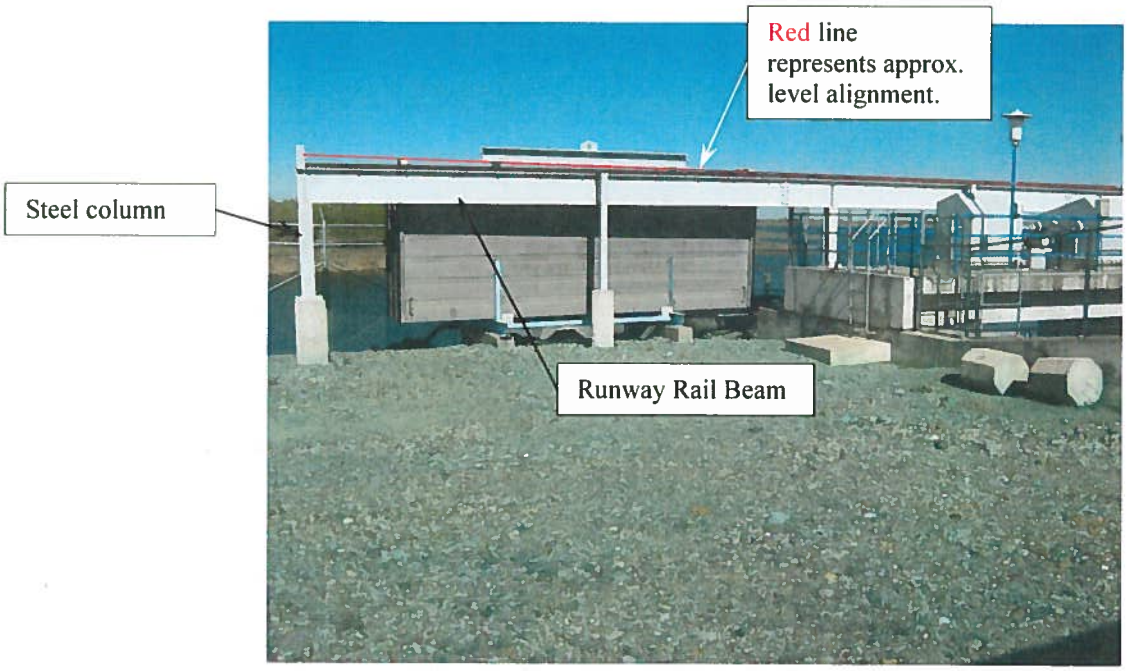

Photo #6, 05/20/2015: (*Photo by Gary Grassel, Tiber Dam – Southwest Gantry Sub-structure*). Photo appears to indicate Runway Rail Beam not level with remaining system and south end steel column out of plumb. *(Looking West)*

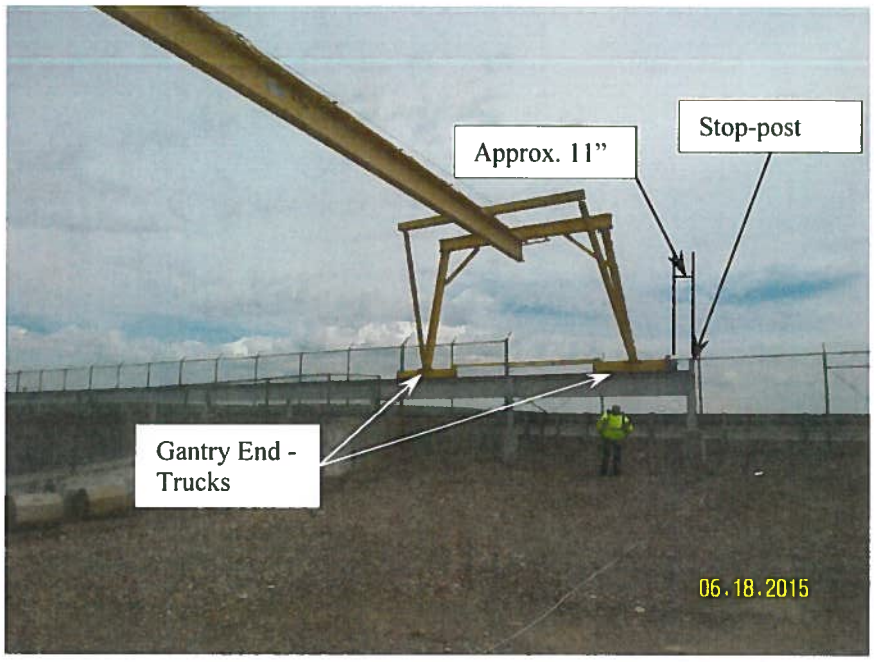

Photo #7, 06/18/2015: (*Photo by Gary Grassel, Tiber Dam – Southeast Gantry Crane System*). Photo represents gap at end-truck from end of sub-structure stop-post. West side of crane end-truck is in contact with end of sub-structure stop-post. *(Looking East)*

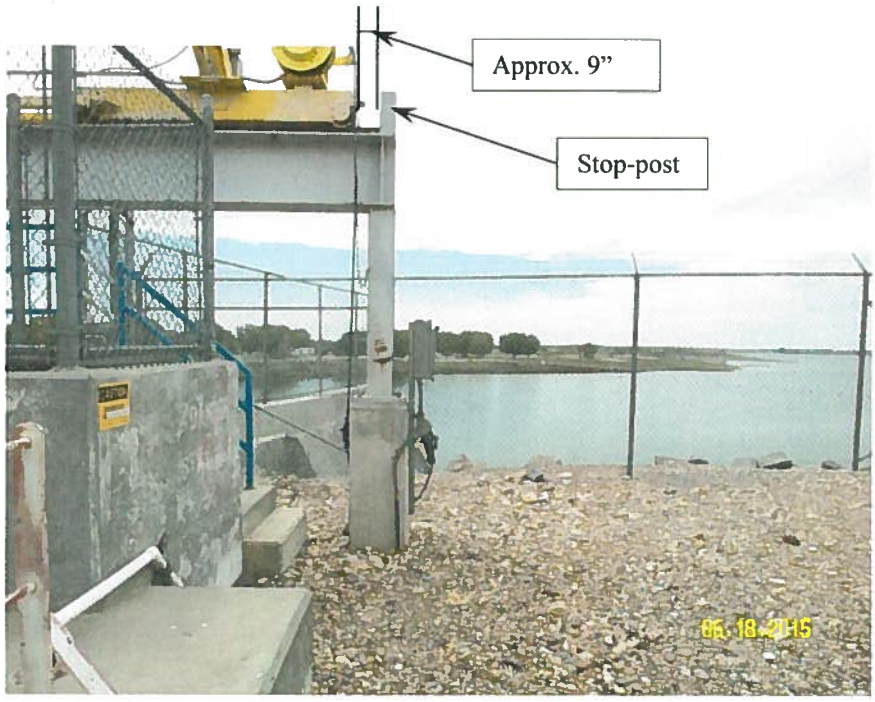

Photo #8, 06/18/2015: (*Photo by Gary Grassel, Tiber Dam – Northwest Gantry Crane System*). Photo represents gap at end-truck from end of sub-structure stop-post. East side of crane end-truck is in contact with end of sub-structure stop-post. *(Looking West)*

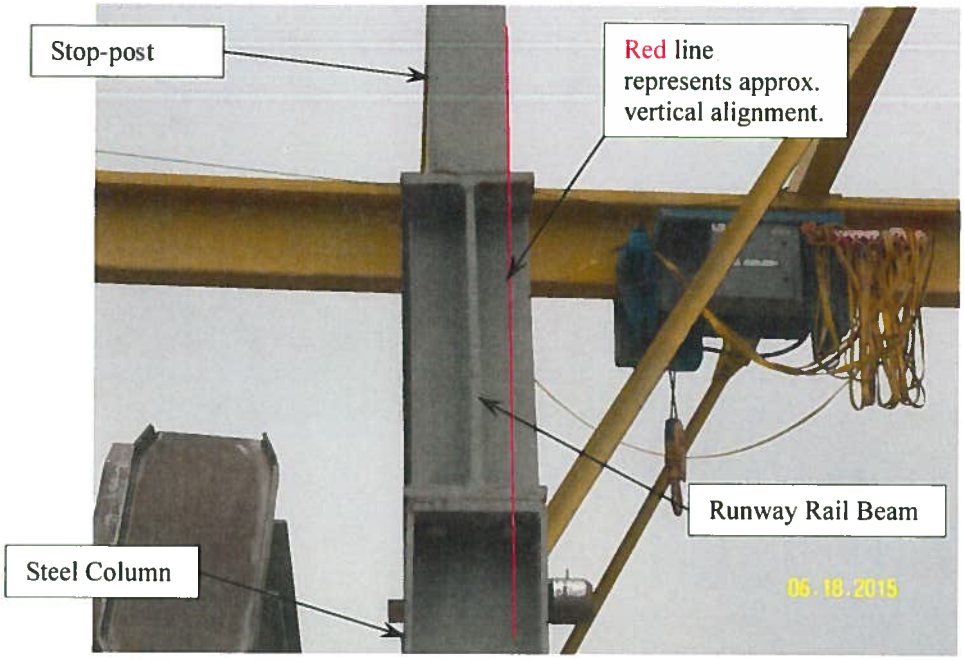

Photo #9, 06/18/2015: (*Photo by Gary Grassel, Tiber Dam – Southwest column / Rail beam*). Photo shows Runway Rail Beam out of plumb condition. *(Looking North)*

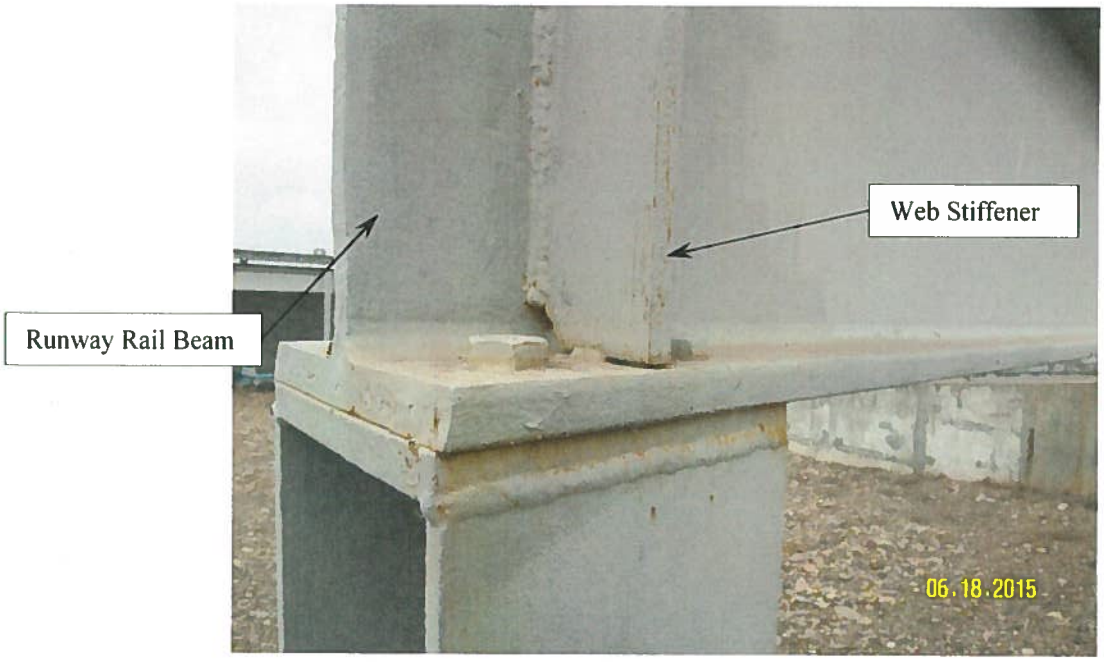

Photo #10, 06/18/2015: (*Photo by Gary Grassel, Tiber Dam – Southeast column / Rail beam).* Photo indicates inadequate weld from stiffener to Rail Beam. (*Looking North West*)

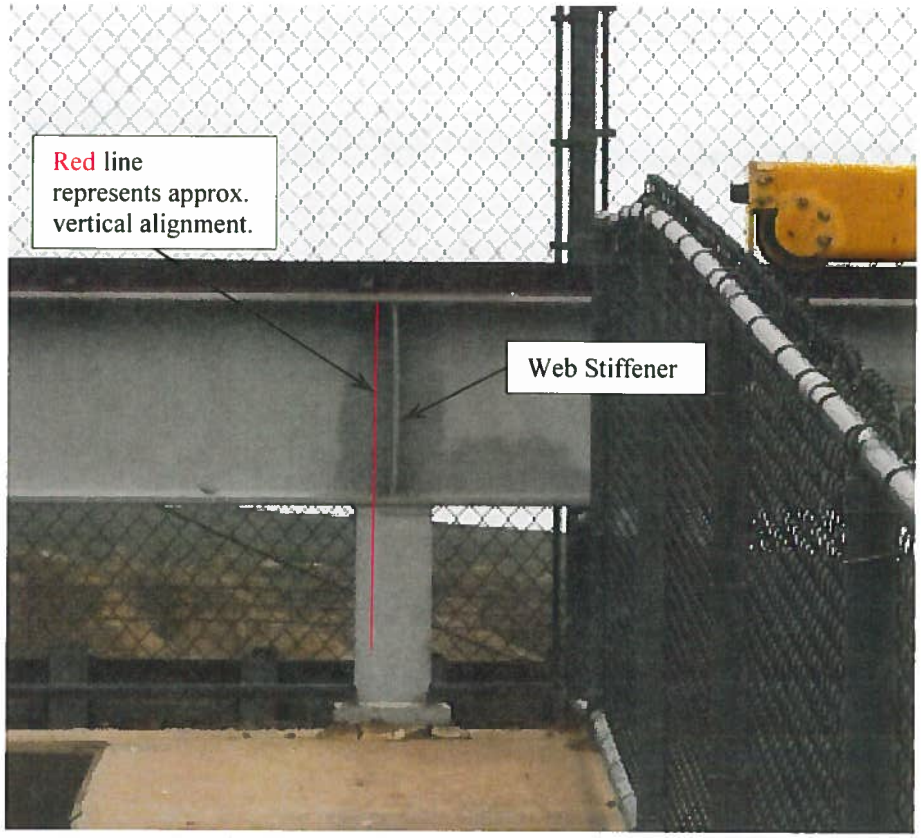

Photo #11, 06/18/2015: (*Photo by Gary Grassel, Tiber Dam – East Sub-structure System*). Photo is taken at second support location from south end for east Runway Rail Beam system. Though somewhat difficult to see in photo, the beam web stiffener is significantly warped out of a plumb condition. *(Looking East)*

Clauses

52.252-2 Clauses Incorporated by Reference (Feb 1998)

This contract incorporates one or more clauses by reference, with the same force and effect as if they were given in full text. Upon request, the Contracting Officer will make their full text available. Also, the full text of a clause may be accessed electronically at this/these address(es):

(1) Federal Acquisition Regulation (FAR) Clauses: https://www.acquisition.gov/far/part-52

(2) Revolutionary FAR Overhaul (RFO) Deviation Clauses: https://www.acquisition.gov/far-overhaul/far-part-deviation-guide/far-overhaul-part-52

The following clauses are incorporated by reference:

52.203-17 Contractor Employee Whistleblower Rights (Nov 2023)

52.204-13 System for Award Management—Maintenance (RFO DEVIATION Mar 2026)

52.204-10 Reporting Executive Compensation and First-Tier Subcontract Awards (RFO DEVIATION Mar 2026)

52.204-13 System for Award Management – Maintenance (RFO DEVIATION Mar 2026)

52.204-19 Incorporation by Reference of Representations and Certifications (Dec 2014)

52.209-6 Protecting the Government's Interest When Subcontracting with Contractors Debarred, Suspended, Proposed for Debarment, or Voluntary Excluded (RFO DEVIATION May 2026)

52.209-10 Prohibition on Contracting with Inverted Domestic Corporations (RFO DEVIATION May 2026)

52.219-6 Notice of Total Small Business Set-Aside (RFO DEVIATION Jan 2026)

52.222-3 Convict Labor (RFO DEVIATION May 2026)

52.222-6 Construction Wage Rate Requirements (RFO DEVIATION May 2026)

52.222-7 Withholding of Funds (RFO DEVIATION May 2026)

52.222-8 Payrolls and Basic Records (RFO DEVIATION May 2026)

52.222-9 Apprentices and Trainees (RFO DEVIATION May 2026)

52.222-10 Compliance with Copeland Act Requirements (RFO DEVIATION May 2026)

52.222-11 Subcontracts (Labor Standards) (RFO DEVIATION May 2026)

52.222-12 Contract Termination – Debarment (May 2014)

52.222-13 Compliance with Construction Wage Rate Requirements and Related Regulations (May 2014)

52.222-14 Disputes Concerning Labor Standards (RFO DEVIATION May 2026)

52.222-15 Certification of Eligibility (May 2014)

52.222-36 Equal Opportunity for Workers with Disabilities (RFO DEVIATION May 2026)

52.222-50 Combating Trafficking in Persons (RFO DEVIATION May 2026)

52.222-55 Minimum Wages for Contractor Workers Under Executive Order 14026 (RFO DEVIATION May 2026)

52.222-62 Paid Sick Leave Under Executive Order 13706 (RFO DEVIATION May 2026)

52.222-90 Addressing DEI Discrimination by Federal Contractors (RFO DEVIATION May 2026)

52.223-5 Pollution Prevention and Right-to-Know Information (May 2024)

52.223-23 Sustainable Products (RFO DEVIATION May 2026)

52.225-13 Restrictions on Certain Foreign Purchases (Feb 2021)

52.226-8 Encouraging Contractor Policies to Ban Text Messaging While Driving (May 2024)

52.227-1 Authorization and Consent (Jun 2020)

52.227-2 Notice and Assistance Regarding Patent and Copyright Infringement (Jun 2020)

52.227-4 Patent Indemnity – Construction Contracts (Dec 2007)

52.228-5 Insurance – Work on a Government Installation (Jan 1997)

52.228-11 Individual Surety – Pledge of Assets (Feb 2021)

52.228-12 Prospective Subcontractor Requests for Bonds (Dec 2022)

52.232-23 Assignment of Claims (May 2014)

52.232-33 Payment by Electronic Funds Transfer – System for Award Management (Oct 2018)

52.232-39 Unenforceability of Unauthorized Obligations (Jun 2013)

52.232-40 Providing Accelerated Payments to Small Business Subcontractors (Mar 2023)

52.233-1 Disputes (May 2014)

52.233-3 Protest after Award (Aug 1996)

52.233-4 Applicable Law for Breach of Contract Claim (Oct 2004)

52.236-3 Site Investigation and Conditions Affecting the Work (RFO DEVIATION Jan 2026)

52.236-5 Material and Workmanship (RFO DEVIATION Jan 2026)

52.236-7 Permits and Responsibilities (RFO DEVIATION Jan 2026)

52.236-9 Protection of Existing Vegetation, Structures, Equipment, Utilities, and Improvements (RFO DEVIATION Jan 2026)

52.236-10 Operations and Storage Areas (RFO DEVIATION Jan 2026)

52.236-12 Cleaning Up (RFO DEVIATION Jan 2026)

52.240-91 Security Prohibitions and Exclusions (RFO DEVIATION Mar 2026)

52.240-93 Basic Safeguarding of Covered Contractor Information Systems (RFO DEVIATION Mar 2026)

52.244-6 Subcontracts for Commercial Products and Commercial Services (RFO DEVIATION May 2026)

52.245-1 Alt I Government Property (Sep 2021) – Alternate I (Apr 2012)

52.249-1 Alt I Termination for Convenience of the Government (Fixed-Price)(Short Form) (Apr 1984) – Alternate I (Apr 1984)

52.249-10 Alt I Default (Fixed-Price Construction) (Apr 1984) – Alternate I (Apr 1984)

52.253-1 Computer Generated Forms (RFO DEVIATION May 2026)

(End of Clauses Incorporated by Reference)

52.219-28 Post-Award Small Business Program Rerepresentation (RFO DEVIATION Jan 2026)

(a) *Definitions*. As used in this clause—

Long-term contract means a contract of more than five years in duration, including options. However, the term does not include contracts that exceed five years in duration because the period of performance has been extended for a cumulative period not to exceed six months under the clause at 52.217-8, Option to Extend Services, or other appropriate authority.

Small business concern—

(1) Means a concern, including its affiliates, that is independently owned and operated, not dominant in its field of operation, and qualified as a small business under the criteria in 13 CFR part 121 and the size standard in paragraph (c) of this clause.

(2) Affiliates, as used in this definition, means business concerns, one of whom directly or indirectly controls or has the power to control the others, or a third party or parties control or have the power to control the others. In determining whether affiliation exists, consideration is given to all appropriate factors including common ownership, common management, and contractual relationships. SBA determines affiliation based on the factors set forth at 13 CFR 121.103.

(b) If the Contractor represented that it was a small business concern, a small disadvantaged business concern, or a joint venture that was any of the small business concerns identified in 19.000(a)(3) prior to award of this contract, the Contractor shall rerepresent its size and socioeconomic status according to paragraph (e) of this clause or, if applicable, paragraph (g) of this clause, upon occurrence of any of the following:

(1) Within 30 days after execution of a novation agreement or within 30 days after modification of the contract to include this clause, if the novation agreement was executed prior to inclusion of this clause in the contract.

(2) Within 30 days after a merger or acquisition that does not require a novation or within 30 days after modification of the contract to include this clause, if the merger or acquisition occurred prior to inclusion of this clause in the contract.

(3) For long-term contracts-

(i) Within 60 to 120 days prior to the end of the fifth year of the contract; and

(ii) Within 60 to 120 days prior to the date specified in the contract for exercising any option thereafter.

(c) The Contractor shall rerepresent its size status in accordance with the size standard in effect at the time of this rerepresentation that corresponds to the North American Industry Classification System (NAICS) code(s) assigned to this contract. The small business size standard corresponding to this NAICS code(s) can be found at https://www.sba.gov/document/support--table-size-standards.

(d) The small business size standard for a Contractor providing an end item that it does not manufacture, process, or produce itself, for a contract other than a construction or service contract, is 500 employees, or 150 employees for information technology value-added resellers under NAICS code 541519, if the acquisition—

(1) Was set aside for small business and has a value above the simplified acquisition threshold;

(2) Used the HUBZone price evaluation preference regardless of dollar value, unless the Contractor waived the price evaluation preference; or

(3) Was an 8(a), HUBZone, service-disabled veteran-owned, economically disadvantaged women-owned, or women-owned small business set-aside or sole-source award regardless of dollar value.

(e) Except as provided in paragraph (g) of this clause, the Contractor shall make the representation(s) required by paragraph (b) of this clause by validating or updating all its representations in the Representations and Certifications section of the System for Award Management (SAM) and its other data in SAM, as necessary, to ensure that they reflect the Contractor's current status. The Contractor shall notify the contracting officer in writing within the timeframes specified in paragraph (b) of this clause, that the data have been validated or updated, and provide the date of the validation or update.

(f) If the Contractor represented that it was other than a small business concern prior to award of this contract, the Contractor may, but is not required to, take the actions required by paragraphs (e) or (g) of this clause.

(g) If the Contractor does not have representations and certifications in SAM, or does not have a representation in SAM for the NAICS code applicable to this contract, the Contractor is required to complete the following rerepresentation and submit it to the contracting office, along with the contract number and the date on which the rerepresentation was completed:

(1) The Contractor represents that it ☐ is, ☐ is not a small business concern under NAICS Code **237990 – Other Heavy and Civil Engineering Construction** assigned to contract number **TBD**.

(2) [*Complete only if the Contractor represented itself as a small business concern in paragraph (g)(1) of this clause.*] The Contractor represents that it ☐ is, ☐ is not, a small disadvantaged business concern as defined in 13 CFR 124.1001.

(3) *Women-owned small business (WOSB) joint venture eligible under the WOSB Program*. The Contractor represents that it ☐ is, ☐ is not a joint venture that complies with the requirements of 13 CFR 127.506(a) through (c). [*The Contractor shall enter the name and unique entity identifier of each party to the joint venture:* _____.]

(4) *Economically disadvantaged women-owned small business (EDWOSB) joint venture*. The Contractor represents that it ☐ is, ☐ is not a joint venture that complies with the requirements of 13 CFR 127.506(a) through (c). [*The Contractor shall enter the name and unique entity identifier of each party to the joint venture:* _____.]

(5) *Service-disabled veteran-owned small business (SDVOSB) joint venture eligible under the SDVOSB Program*. The Contractor represents that it ☐ is, ☐ is not an SDVOSB joint venture eligible under the SDVOSB Program that complies with the requirements of 13 CFR 128.402. [*The Contractor shall enter the name and unique entity identifier of each party to the joint venture:* _____.]

(6) *HUBZone joint venture eligible under the HUBZone Program*. [*Complete only if the offeror is a HUBZone small business concern.*] The offeror represents, as part of its offer, that It ☐ is, ☐ is not a HUBZone joint venture that complies with the requirements of 13 CFR 126.616(a) through (c). [*The Contractor shall enter the name and unique entity identifier of each party to the joint venture:* _____.] Each HUBZone small business concern participating in the HUBZone joint venture must be certified as a HUBZone concern. [*Contractor to sign and date and insert authorized signer's name and title.*_____.]

(End of Clause)

52.225-9 Buy American – Construction Materials (Oct 2022)

(a) *Definitions*. As used in this clause—

Commercially available off-the-shelf (COTS) item—

(1) Means any item of supply (including construction material) that is–

(i) A commercial product (as defined in paragraph (1) of the definition of "commercial product" at Federal Acquisition Regulation (FAR) 2.101);

(ii) Sold in substantial quantities in the commercial marketplace; and

(iii) Offered to the Government, under a contract or subcontract at any tier, without modification, in the same form in which it is sold in the commercial marketplace; and

(2) Does not include bulk cargo, as defined in 46 U.S.C. 40102(4), such as agricultural products and petroleum products.

Construction material means an article, material, or supply brought to the construction site by the Contractor or a subcontractor for incorporation into the building or work. The term also includes an item brought to the site preassembled from articles, materials, or supplies. However, emergency life safety systems, such as emergency lighting, fire alarm, and audio evacuation systems, that are discrete systems incorporated into a public building or work and that are produced as complete systems, are evaluated as a single and distinct construction material regardless of when or how the individual parts or components of those systems are delivered to the construction site. Materials purchased directly by the Government are supplies, not construction material.

Cost of components means—

(1) For components purchased by the Contractor, the acquisition cost, including transportation costs to the place of incorporation into the construction material (whether or not such costs are paid to a domestic firm), and any applicable duty (whether or not a duty-free entry certificate is issued); or

(2) For components manufactured by the Contractor, all costs associated with the manufacture of the component, including transportation costs as described in paragraph (1) of this definition, plus allocable overhead costs, but excluding profit. Cost of components does not include any costs associated with the manufacture of the construction material.

Critical component means a component that is mined, produced, or manufactured in the United States and deemed critical to the U.S. supply chain. The list of critical components is at FAR 25.105.

Critical item means a domestic construction material or domestic end product that is deemed critical to U.S. supply chain resiliency. The list of critical items is at FAR 25.105.

Domestic construction material means—

(1) For construction material that does not consist wholly or predominantly of iron or steel or a combination of both-

(i) An unmanufactured construction material mined or produced in the United States; or

(ii) A construction material manufactured in the United States, if–

(A) The cost of its components mined, produced, or manufactured in the United States exceeds 60 percent of the cost of all its components, except that the percentage will be 65 percent for items delivered in calendar years 2024 through 2028 and 75 percent for items delivered starting in calendar year 2029. Components of foreign origin of the same class or kind for which nonavailability determinations have been made are treated as domestic. Components of unknown origin are treated as foreign; or

(B) The construction material is a COTS item; or

(2) For construction material that consists wholly or predominantly of iron or steel or a combination of both, a construction material manufactured in the United States if the cost of foreign iron and steel constitutes less than 5 percent of the cost of all components used in such construction material. The cost of foreign iron and steel includes but is not limited to the cost of foreign iron or steel mill products (such as bar, billet, slab, wire, plate, or sheet), castings, or forgings utilized in the manufacture of the construction material and a good faith estimate of the cost of all foreign iron or steel components excluding COTS fasteners. Iron or steel components of unknown origin are treated as foreign. If the construction material contains multiple components, the cost of all the materials used in such construction material is calculated in accordance with the definition of "cost of components".

Fastener means a hardware device that mechanically joins or affixes two or more objects together. Examples of fasteners are nuts, bolts, pins, rivets, nails, clips, and screws.

Foreign construction material means a construction material other than a domestic construction material.

Foreign iron and steel means iron or steel products not produced in the United States. Produced in the United States means that all manufacturing processes of the iron or steel must take place in the United States, from the initial melting stage through the application of coatings, except metallurgical processes involving refinement of steel additives. The origin of the elements of the iron or steel is not relevant to the determination of whether it is domestic or foreign.

Predominantly of iron or steel or a combination of both means that the cost of the iron and steel content exceeds 50 percent of the total cost of all its components. The cost of iron and steel is the cost of the iron or steel mill products (such as bar, billet, slab, wire, plate, or sheet), castings, or forgings utilized in the manufacture of the product and a good faith estimate of the cost of iron or steel components excluding COTS fasteners.

Steel means an alloy that includes at least 50 percent iron, between 0.02 and 2 percent carbon, and may include other elements.

United States means the 50 States, the District of Columbia, and outlying areas.

(b) *Domestic preference*.

(1) This clause implements 41 U.S.C. chapter 83, Buy American, by providing a preference for domestic construction material. In accordance with 41 U.S.C. 1907, the domestic content test of the Buy American statute is waived for construction material that is a COTS item, except that for construction material that consists wholly or predominantly of iron or steel or a combination of both, the domestic content test is applied only to the iron and steel content of the construction materials, excluding COTS fasteners. (See FAR 12.505(a)(2)). The Contractor shall use only domestic construction material in performing this contract, except as provided in paragraphs (b)(2) and (b)(3) of this clause.

(2) This requirement does not apply to information technology that is a commercial product or to the construction materials or components listed by the Government as follows: **None.**

(3) The Contracting Officer may add other foreign construction material to the list in paragraph (b)(2) of this clause if the Government determines that-

(i) The cost of domestic construction material would be unreasonable.

(A) *For domestic construction material that is not a critical item or does not contain critical components*.

(1) The cost of a particular domestic construction material subject to the requirements of the Buy American statute is unreasonable when the cost of such material exceeds the cost of foreign material by more than 20 percent;

(2) For construction material that is not a COTS item and does not consist wholly or predominantly of iron or steel or a combination of both, if the cost of a particular domestic construction material is determined to be unreasonable or there is no domestic offer received, and the low offer is for foreign construction material that is manufactured in the United States and does not exceed 55 percent domestic content, the Contracting Officer will treat the lowest offer of foreign construction material that exceeds 55 percent domestic content as a domestic offer and determine whether the cost of that offer is unreasonable by applying the evaluation factor listed in paragraph (b)(3)(i)(A)(1) of this clause.

(3) The procedures in paragraph (b)(3)(i)(A)(2) of this clause will no longer apply as of January 1, 2030.

(B) For domestic construction material that is a critical item or contains critical components.

(1) The cost of a particular domestic construction material that is a critical item or contains critical components, subject to the requirements of the Buy American statute, is unreasonable when the cost of such material exceeds the cost of foreign material by more than 20 percent plus the additional preference factor identified for the critical item or construction material containing critical components listed at FAR 25.105.

(2) For construction material that does not consist wholly or predominantly of iron or steel or a combination of both, if the cost of a particular domestic construction material is determined to be unreasonable or there is no domestic offer received, and the low offer is for foreign construction material that does not exceed 55 percent domestic content, the Contracting Officer will treat the lowest foreign offer of construction material that is manufactured in the United States and exceeds 55 percent domestic content as a domestic offer, and determine whether the cost of that offer is unreasonable by applying the evaluation factor listed in paragraph (b)(3)(i)(B)(1) of this clause.

(3) The procedures in paragraph (b)(3)(i)(B)(2) of this clause will no longer apply as of January 1, 2030.

(ii) The application of the restriction of the Buy American statute to a particular construction material would be impracticable or inconsistent with the public interest; or

(iii) The construction material is not mined, produced, or manufactured in the United States in sufficient and reasonably available commercial quantities of a satisfactory quality.

(c) *Request for determination of inapplicability of the Buy American statute.*

(1)

(i) Any Contractor request to use foreign construction material in accordance with paragraph (b)(3) of this clause shall include adequate information for Government evaluation of the request, including-

(A) A description of the foreign and domestic construction materials;

(B) Unit of measure;

(C) Quantity;

(D) Price;

(E) Time of delivery or availability;

(F) Location of the construction project;

(G) Name and address of the proposed supplier; and

(H) A detailed justification of the reason for use of foreign construction materials cited in accordance with paragraph (b)(3) of this clause.

(ii) A request based on unreasonable cost shall include a reasonable survey of the market and a completed price comparison table in the format in paragraph (d) of this clause.

(iii) The price of construction material shall include all delivery costs to the construction site and any applicable duty (whether or not a duty-free certificate may be issued).

(iv) Any Contractor request for a determination submitted after contract award shall explain why the Contractor could not reasonably foresee the need for such determination and could not have requested the determination before contract award. If the Contractor does not submit a satisfactory explanation, the Contracting Officer need not make a determination.

(2) If the Government determines after contract award that an exception to the Buy American statute applies and the Contracting Officer and the Contractor negotiate adequate consideration, the Contracting Officer will modify the contract to allow use of the foreign construction material. However, when the basis for the exception is the unreasonable price of a domestic construction material, adequate consideration is not less than the differential established in paragraph (b)(3)(i) of this clause.

(3) Unless the Government determines that an exception to the Buy American statute applies, use of foreign construction material is noncompliant with the Buy American statute.

(d) *Data*. To permit evaluation of requests under paragraph (c) of this clause based on unreasonable cost, the Contractor shall include the following information and any applicable supporting data based on the survey of suppliers:

Foreign and Domestic Construction Materials Price Comparison

Construction material description	Unit of Measure	Quantity	Price (dollars)*
Item 1:			
Foreign construction material			
Domestic construction material			
Item 2:			
Foreign construction material			
Domestic construction material			
[* *Include all delivery costs to the construction site and any applicable duty (whether or not a duty-free entry certificate is issued)*]. [*List name, address, telephone number, and contact for suppliers surveyed. Attach copy of response; if oral, attach summary.*] [*Include other applicable supporting information.*]			

(End of Clause)

52.228-2 Additional Bond Security (Oct 1997)

The Contractor shall promptly furnish additional security required to protect the Government and persons supplying labor or materials under this contract if-

(a) Any surety upon any bond, or issuing financial institution for other security, furnished with this contract becomes unacceptable to the Government;

(b) Any surety fails to furnish reports on its financial condition as required by the Government;

(c) The contract price is increased so that the penal sum of any bond becomes inadequate in the opinion of the Contracting Officer; or

(d) An irrevocable letter of credit (ILC) used as security will expire before the end of the period of required security. If the Contractor does not furnish an acceptable extension or replacement ILC, or other acceptable substitute, at least 30 days before an ILC's scheduled expiration, the Contracting officer has the right to immediately draw on the ILC.

(End of Clause)

52.228-13 Alternative Payment Protections (Jul 2000)

(a) The Contractor shall submit one of the following payment protections:

(1) A payment bond.

(2) An irrevocable letter of credit (ILC).

(b) The amount of the payment protection shall be 100 percent of the contract price.

(c) The submission of the payment protection is required within **10** days of contract award.

(d) The payment protection shall provide protection for the full contract performance period plus a one-year period.

(e) Except for escrow agreements and payment bonds, which provide their own protection procedures, the Contracting Officer is authorized to access funds under the payment protection when it has been alleged in writing by a supplier of labor or material that a nonpayment has occurred, and to withhold such funds pending resolution by administrative or judicial proceedings or mutual agreement of the parties.

(f) When a tripartite escrow agreement is used, the Contractor shall utilize only suppliers of labor and material that signed the escrow agreement.

(End of Clause)

52.232-5 Payments under Fixed-Price Construction Contracts (May 2014)

(a) *Payment of price*. The Government shall pay the Contractor the contract price as provided in this contract.

(b) *Progress payments*. The Government shall make progress payments monthly as the work proceeds, or at more frequent intervals as determined by the Contracting Officer, on estimates of work accomplished which meets the standards of quality established under the contract, as approved by the Contracting Officer.

(1) The Contractor's request for progress payments shall include the following substantiation:

(i) An itemization of the amounts requested, related to the various elements of work required by the contract covered by the payment requested.

(ii) A listing of the amount included for work performed by each subcontractor under the contract.

(iii) A listing of the total amount of each subcontract under the contract.

(iv) A listing of the amounts previously paid to each such subcontractor under the contract.

(v) Additional supporting data in a form and detail required by the Contracting Officer.

(2) In the preparation of estimates, the Contracting Officer may authorize material delivered on the site and preparatory work done to be taken into consideration. Material delivered to the Contractor at locations other than the site also may be taken into consideration if-

(i) Consideration is specifically authorized by this contract; and

(ii) The Contractor furnishes satisfactory evidence that it has acquired title to such material and that the material will be used to perform this contract.

(c) *Contractor certification*. Along with each request for progress payments, the Contractor shall furnish the following certification, or payment shall not be made: (However, if the Contractor elects to delete paragraph (c)(4) from the certification, the certification is still acceptable.)

I hereby certify, to the best of my knowledge and belief, that-

(1) The amounts requested are only for performance in accordance with the specifications, terms, and conditions of the contract;

(2) All payments due to subcontractors and suppliers from previous payments received under the contract have been made, and timely payments will be made from the proceeds of the payment covered by this certification, in accordance with subcontract agreements and the requirements of Chapter 39 of Title 31, United States Code;

(3) This request for progress payments does not include any amounts which the prime contractor intends to withhold or retain from a subcontractor or supplier in accordance with the terms and conditions of the subcontract; and

(4) This certification is not to be construed as final acceptance of a subcontractor's performance.
Name: _____
Title: _____
Date: _____

(d) *Refund of unearned amounts*. If the Contractor, after making a certified request for progress payments, discovers that a portion or all of such request constitutes a payment for performance by the Contractor that fails to conform to the specifications, terms, and conditions of this contract (hereinafter referred to as the "unearned amount"), the Contractor shall-

(1) Notify the Contracting Officer of such performance deficiency; and

(2) Be obligated to pay the Government an amount (computed by the Contracting Officer in the manner provided in paragraph (j) of this clause) equal to interest on the unearned amount from the 8th day after the date of receipt of the unearned amount until-

(i) The date the Contractor notifies the Contracting Officer that the performance deficiency has been corrected; or

(ii) The date the Contractor reduces the amount of any subsequent certified request for progress payments by an amount equal to the unearned amount.

(e) *Retainage*. If the Contracting Officer finds that satisfactory progress was achieved during any period for which a progress payment is to be made, the Contracting Officer shall authorize payment to be made in full. However, if satisfactory progress has not been made, the Contracting Officer may retain a maximum of 10 percent of the amount of the payment until satisfactory progress is achieved. When the work is substantially complete, the Contracting Officer may retain from previously withheld funds and future progress payments that amount the Contracting Officer considers adequate for protection of the Government and shall release to the Contractor all the remaining withheld funds. Also, on completion and acceptance of each separate building, public work, or other division of the contract, for which the price is stated

separately in the contract, payment shall be made for the completed work without retention of a percentage.

(f) *Title, liability, and reservation of rights*. All material and work covered by progress payments made shall, at the time of payment, become the sole property of the Government, but this shall not be construed as-

(1) Relieving the Contractor from the sole responsibility for all material and work upon which payments have been made or the restoration of any damaged work; or

(2) Waiving the right of the Government to require the fulfillment of all of the terms of the contract.

(g) *Reimbursement for bond premiums*. In making these progress payments, the Government shall, upon request, reimburse the Contractor for the amount of premiums paid for performance and payment bonds (including coinsurance and reinsurance agreements, when applicable) after the Contractor has furnished evidence of full payment to the surety. The retainage provisions in paragraph (e) of this clause shall not apply to that portion of progress payments attributable to bond premiums.

(h) *Final payment*. The Government shall pay the amount due the Contractor under this contract after-

(1) Completion and acceptance of all work;

(2) Presentation of a properly executed voucher; and

(3) Presentation of release of all claims against the Government arising by virtue of this contract, other than claims, in stated amounts, that the Contractor has specifically excepted from the operation of the release. A release may also be required of the assignee if the Contractor's claim to amounts payable under this contract has been assigned under the Assignment of Claims Act of1940 (31 U.S.C.3727 and 41 U.S.C. 6305).

(i) *Limitation because of undefinitized work*. Notwithstanding any provision of this contract, progress payments shall not exceed 80 percent on work accomplished on undefinitized contract actions. A "contract action" is any action resulting in a contract, as defined in FAR subpart 2.1, including contract modifications for additional supplies or services, but not including contract modifications that are within the scope and under the terms of the contract, such as contract modifications issued pursuant to the Changes clause, or funding and other administrative changes.

(j) *Interest computation on unearned amounts*. In accordance with 31 U.S.C. 3903(c)(1), the amount payable under paragraph (d)(2) of this clause shall be-

(1) Computed at the rate of average bond equivalent rates of 91-day Treasury bills auctioned at the most recent auction of such bills prior to the date the Contractor receives the unearned amount; and

(2) Deducted from the next available payment to the Contractor.

(End of Clause)

52.232-27 Prompt Payment for Construction Contracts (Jan 2017)

Notwithstanding any other payment terms in this contract, the Government will make invoice payments under the terms and conditions specified in this clause. The Government considers payment as being made on the day a check is dated or the date of an electronic funds transfer. Definitions of pertinent terms are set forth in sections 2.101, 32.001, and 32.902 of the Federal Acquisition Regulation. All days referred to in this clause are calendar days, unless otherwise specified. (However, see paragraph (a)(3) concerning payments due on Saturdays, Sundays, and legal holidays.)

(a) Invoice payments-

(1) *Types of invoice payments*. For purposes of this clause, there are several types of invoice payments that may occur under this contract, as follows:

(i) Progress payments, if provided for elsewhere in this contract, based on Contracting Officer approval of the estimated amount and value of work or services performed, including payments for reaching milestones in any project.

(A) The due date for making such payments is 14 days after the designated billing office receives a proper payment request. If the designated billing office fails to annotate the payment request with the actual date of receipt at the time of receipt, the payment due date is the 14th day after the date of the Contractor's payment request, provided the designated billing office receives a proper payment request and there is no disagreement over quantity, quality, or Contractor compliance with contract requirements.

(B) The due date for payment of any amounts retained by the Contracting Officer in accordance with the clause at 52.232-5, Payments Under Fixed-Price Construction Contracts, is as specified in the contract or, if not specified, 30 days after approval by the Contracting Officer for release to the Contractor.

(ii) Final payments based on completion and acceptance of all work and presentation of release of all claims against the Government arising by virtue of the contract, and payments for partial deliveries that have been accepted by the Government (*e.g.,* each separate building, public work, or other division of the contract for which the price is stated separately in the contract).

(A) The due date for making such payments is the later of the following two events:

(1) The 30th day after the designated billing office receives a proper invoice from the Contractor.

(2) The 30th day after Government acceptance of the work or services completed by the Contractor. For a final invoice when the payment amount is subject to contract settlement actions (*e.g.,* release of claims), acceptance is deemed to occur on the effective date of the contract settlement.

(B) If the designated billing office fails to annotate the invoice with the date of actual receipt at the time of receipt, the invoice payment due date is the 30 thday after the date of the Contractor's invoice, provided the designated billing office receives a proper invoice and there is no disagreement over quantity, quality, or Contractor compliance with contract requirements.

(2) *Contractor's invoice*. The Contractor shall prepare and submit invoices to the designated billing office specified in the contract. A proper invoice must include the items listed in paragraphs (a)(2)(i) through (a)(2)(xi) of this clause. If the invoice does not comply with these requirements, the designated billing office must return it within 7 days after receipt, with the reasons why it is not a proper invoice. When computing any interest penalty owed the Contractor, the Government will take into account if the Government notifies the Contractor of an improper invoice in an untimely manner.

(i) Name and address of the Contractor.

(ii) Invoice date and invoice number. (The Contractor should date invoices as close as possible to the date of mailing or transmission.)

(iii) Contract number or other authorization for work or services performed (including order number and line item number).

(iv) Description of work or services performed.

(v) Delivery and payment terms (*e.g.,* discount for prompt payment terms).

(vi) Name and address of Contractor official to whom payment is to be sent (must be the same as that in the contract or in a proper notice of assignment).

(vii) Name (where practicable), title, phone number, and mailing address of person to notify in the event of a defective invoice.

(viii) For payments described in paragraph (a)(1)(i) of this clause, substantiation of the amounts requested and certification in accordance with the requirements of the clause at 52.232-5, Payments Under Fixed-Price Construction Contracts.

(ix) Taxpayer Identification Number (TIN). The Contractor shall include its TIN on the invoice only if required elsewhere in this contract.

(x) Electronic funds transfer (EFT) banking information.

(A) The Contractor shall include EFT banking information on the invoice only if required elsewhere in this contract.

(B) If EFT banking information is not required to be on the invoice, in order for the invoice to be a proper invoice, the Contractor shall have submitted correct EFT banking information in accordance with the applicable solicitation provision (*e.g.,* 52.232-38, Submission of Electronic Funds Transfer Information with Offer), contract clause (*e.g.,* 52.232-33, Payment by Electronic Funds Transfer-System for Award Management, or 52.232-34, Payment by Electronic Funds Transfer-Other Than System for Award Management), or applicable agency procedures.

(C) EFT banking information is not required if the Government waived the requirement to pay by EFT.

(xi) Any other information or documentation required by the contract.

(3) *Interest penalty*. The designated payment office will pay an interest penalty automatically, without request from the Contractor, if payment is not made by the due date and the conditions listed in paragraphs (a)(3)(i) through (a)(3)(iii) of this clause are met, if applicable. However, when the due date falls on a Saturday, Sunday, or legal holiday, the designated payment office may make payment on the following working day without incurring a late payment interest penalty.

(i) The designated billing office received a proper invoice.

(ii) The Government processed a receiving report or other Government documentation authorizing payment and there was no disagreement over quantity, quality, Contractor compliance with any contract term or condition, or requested progress payment amount.

(iii) In the case of a final invoice for any balance of funds due the Contractor for work or services performed, the amount was not subject to further contract settlement actions between the Government and the Contractor.

(4) *Computing penalty amount*. The Government will compute the interest penalty in accordance with the Office of Management and Budget prompt payment regulations at 5 CFR Part 1315.

(i) For the sole purpose of computing an interest penalty that might be due the Contractor for payments described in paragraph (a)(1)(ii) of this clause, Government acceptance or approval is deemed to occur constructively on the 7 thday after the Contractor has completed the work or services in accordance with the terms and conditions of the contract. If actual acceptance or approval occurs within the constructive acceptance or approval period, the Government will base the determination of an interest penalty on the actual date of acceptance or approval. Constructive acceptance or constructive approval requirements do not apply if there is a disagreement over quantity, quality, or Contractor compliance with a contract provision. These requirements also do not compel Government officials to accept work or services, approve Contractor estimates, perform contract administration functions, or make payment prior to fulfilling their responsibilities.

(ii) The prompt payment regulations at 5 CFR1315.10(c) do not require the Government to pay interest penalties if payment delays are due to disagreement between the Government and the Contractor over the payment amount or other issues involving contract compliance, or on amounts temporarily withheld or retained in accordance with the terms of the contract. The Government and the Contractor shall resolve claims involving disputes, and any interest that may be payable in accordance with the clause at FAR 52.233-1, Disputes.

(5) *Discounts for prompt payment*. The designated payment office will pay an interest penalty automatically, without request from the Contractor, if the Government takes a discount for prompt payment improperly. The Government will calculate the interest penalty in accordance with the prompt payment regulations at 5 CFR Part 1315.

(6) *Additional interest penalty*.

(i) The designated payment office will pay a penalty amount, calculated in accordance with the prompt payment regulations at 5 CFR Part 1315 in addition to the interest penalty amount only if-

(A) The Government owes an interest penalty of $1 or more;

(B) The designated payment office does not pay the interest penalty within 10 days after the date the invoice amount is paid; and

(C) The Contractor makes a written demand to the designated payment office for additional penalty payment, in accordance with paragraph (a)(6)(ii) of this clause, postmarked not later than 40 days after the date the invoice amount is paid.

(ii)

(A) The Contractor shall support written demands for additional penalty payments with the following data. The Government will not request any additional data. The Contractor shall-

(1) Specifically assert that late payment interest is due under a specific invoice, and request payment of all overdue late payment interest penalty and such additional penalty as may be required;

(2) Attach a copy of the invoice on which the unpaid late payment interest was due; and

(3) State that payment of the principal has been received, including the date of receipt.

(B) If there is no postmark or the postmark is illegible-

(1) The designated payment office that receives the demand will annotate it with the date of receipt provided the demand is received on or before the 40th day after payment was made; or

(2) If the designated payment office fails to make the required annotation, the Government will determine the demand's validity based on the date the Contractor has placed on the demand, provided such date is no later than the 40th day after payment was made.

(b) *Contract financing payments*. If this contract provides for contract financing, the Government will make contract financing payments in accordance with the applicable contract financing clause.

(c) *Subcontract clause requirements*. The Contractor shall include in each subcontract for property or services (including a material supplier) for the purpose of performing this contract the following:

(1) *Prompt payment for subcontractors*. A payment clause that obligates the Contractor to pay the subcontractor for satisfactory performance under its subcontract not later than 7 days from receipt of payment out of such amounts as are paid to the Contractor under this contract.

(2) *Interest for subcontractors*. An interest penalty clause that obligates the Contractor to pay to the subcontractor an interest penalty for each payment not made in accordance with the payment clause-

(i) For the period beginning on the day after the required payment date and ending on the date on which payment of the amount due is made; and

(ii) Computed at the rate of interest established by the Secretary of the Treasury, and published in the *Federal Register*, for interest payments under 41 U.S.C. 7109 in effect at the time the Contractor accrues the obligation to pay an interest penalty.

(3) *Subcontractor clause flowdown*. A clause requiring each subcontractor to-

(i) Include a payment clause and an interest penalty clause conforming to the standards set forth in paragraphs (c)(1) and (c)(2) of this clause in each of its subcontracts; and

(ii) Require each of its subcontractors to include such clauses in their subcontracts with each lower-tier subcontractor or supplier.

(d) *Subcontract clause interpretation*. The clauses required by paragraph (c) of this clause shall not be construed to impair the right of the Contractor or a subcontractor at any tier to negotiate, and to include in their subcontract, provisions that-

(1) *Retainage permitted*. Permit the Contractor or a subcontractor to retain (without cause) a specified percentage of each progress payment otherwise due to a subcontractor for satisfactory performance under the subcontract without incurring any obligation to pay a late payment interest penalty, in accordance with terms and conditions agreed to by the parties to the subcontract, giving such recognition as the parties deem appropriate to the ability of a subcontractor to furnish a performance bond and a payment bond;

(2) *Withholding permitted*. Permit the Contractor or subcontractor to make a determination that part or all of the subcontractor's request for payment may be withheld in accordance with the subcontract agreement; and

(3) *Withholding requirements*. Permit such withholding without incurring any obligation to pay a late payment penalty if-

(i) A notice conforming to the standards of paragraph (g) of this clause previously has been furnished to the subcontractor; and

(ii) The Contractor furnishes to the Contracting Officer a copy of any notice issued by a Contractor pursuant to paragraph (d)(3)(i) of this clause.

(e) *Subcontractor withholding procedures*. If a Contractor, after making a request for payment to the Government but before making a payment to a subcontractor for the subcontractor's performance covered by the payment request, discovers that all or a portion of the payment otherwise due such subcontractor is subject to withholding from the subcontractor in accordance with the subcontract agreement, then the Contractor shall-

(1) *Subcontractor notice*. Furnish to the subcontractor a notice conforming to the standards of paragraph (g) of this clause as soon as practicable upon ascertaining the cause giving rise to a withholding, but prior to the due date for subcontractor payment;

(2) *Contracting Officer notice*. Furnish to the Contracting Officer, as soon as practicable, a copy of the notice furnished to the subcontractor pursuant to paragraph (e)(1) of this clause;

(3) *Subcontractor progress payment reduction*. Reduce the subcontractor's progress payment by an amount not to exceed the amount specified in the notice of withholding furnished under paragraph (e)(1) of this clause;

(4) *Subsequent subcontractor payment*. Pay the subcontractor as soon as practicable after the correction of the identified subcontract performance deficiency, and-

(i) Make such payment within-

(A) Seven days after correction of the identified subcontract performance deficiency (unless the funds therefor must be recovered from the Government because of a reduction under paragraph (e)(5)(i)) of this clause; or

(B) Seven days after the Contractor recovers such funds from the Government; or

(ii) Incur an obligation to pay a late payment interest penalty computed at the rate of interest established by the Secretary of the Treasury, and published in the *Federal Register*, for interest payments under 41 U.S.C. 7109 in effect at the time the Contractor accrues the obligation to pay an interest penalty;

(5) *Notice to Contracting Officer*. Notify the Contracting Officer upon-

(i) Reduction of the amount of any subsequent certified application for payment; or

(ii) Payment to the subcontractor of any withheld amounts of a progress payment, specifying-

(A) The amounts withheld under paragraph (e)(1) of this clause; and

(B) The dates that such withholding began and ended; and

(6) *Interest to Government*. Be obligated to pay to the Government an amount equal to interest on the withheld payments (computed in the manner provided in 31 U.S.C. 3903(c)(1)), from the 8th day after receipt of the withheld amounts from the Government until-

(i) The day the identified subcontractor performance deficiency is corrected; or

(ii) The date that any subsequent payment is reduced under paragraph (e)(5)(i) of this clause.

(f) Third-party deficiency reports-

(1) *Withholding from subcontractor*. If a Contractor, after making payment to a first-tier subcontractor, receives from a supplier or subcontractor of the first-tier subcontractor (hereafter referred to as a "second-tier subcontractor") a written notice in accordance with 40 U.S.C. 3133, asserting a deficiency in such first-tier subcontractor's performance under the contract for which the Contractor may be ultimately liable, and the Contractor determines that all or a portion of future payments otherwise due such first-tier subcontractor is subject to withholding in accordance with the subcontract agreement, the Contractor may, without incurring an obligation to pay an interest penalty under paragraph (e)(6) of this clause-

(i) Furnish to the first-tier subcontractor a notice conforming to the standards of paragraph (g) of this clause as soon as practicable upon making such determination; and

(ii) Withhold from the first-tier subcontractor's next available progress payment or payments an amount not to exceed the amount specified in the notice of withholding furnished under paragraph (f)(1)(i) of this clause.

(2) *Subsequent payment or interest charge*. As soon as practicable, but not later than 7 days after receipt of satisfactory written notification that the identified subcontract performance deficiency has been corrected, the Contractor shall-

(i) Pay the amount withheld under paragraph (f)(1)(ii) of this clause to such first-tier subcontractor; or

(ii) Incur an obligation to pay a late payment interest penalty to such first-tier subcontractor computed at the rate of interest established by the Secretary of the Treasury, and published in the *Federal Register*, for interest payments under 41 U.S.C. 7109 in effect at the time the Contractor accrues the obligation to pay an interest penalty.

(g) *Written notice of subcontractor withholding*. The Contractor shall issue a written notice of any withholding to a subcontractor (with a copy furnished to the Contracting Officer), specifying-

(1) The amount to be withheld;

(2) The specific causes for the withholding under the terms of the subcontract; and

(3) The remedial actions to be taken by the subcontractor in order to receive payment of the amounts withheld.

(h) *Subcontractor payment entitlement*. The Contractor may not request payment from the Government of any amount withheld or retained in accordance with paragraph (d) of this clause until such time as the Contractor has determined and certified to the Contracting Officer that the subcontractor is entitled to the payment of such amount.

(i) *Prime-subcontractor disputes*. A dispute between the Contractor and subcontractor relating to the amount or entitlement of a subcontractor to a payment or a late payment interest penalty under a clause included in the subcontract pursuant to paragraph (c) of this clause does not constitute a dispute to which the Government is a party. The Government may not be interpleaded in any judicial or administrative proceeding involving such a dispute.

(j) *Preservation of prime-subcontractor rights*. Except as provided in paragraph (i) of this clause, this clause shall not limit or impair any contractual, administrative, or judicial remedies otherwise available to the Contractor or a subcontractor in the event of a dispute involving late payment or nonpayment by the Contractor or deficient subcontract performance or nonperformance by a subcontractor.

(k) *Non-recourse for prime contractor interest penalty*. The Contractor's obligation to pay an interest penalty to a subcontractor pursuant to the clauses included in a subcontract under paragraph (c) of this clause shall not be construed to be an obligation of the Government for such interest penalty. A cost-reimbursement claim may not include any amount for reimbursement of such interest penalty.

(l) *Overpayments*. If the Contractor becomes aware of a duplicate contract financing or invoice payment or that the Government has otherwise overpaid on a contract financing or invoice payment, the Contractor shall-

(1) Remit the overpayment amount to the payment office cited in the contract along with a description of the overpayment including the-

(i) Circumstances of the overpayment (*e.g.*, duplicate payment, erroneous payment, liquidation errors, date(s) of overpayment);

(ii) Affected contract number and delivery order number if applicable;

(iii) Affected line item or subline item, if applicable; and

(iv) Contractor point of contact.

(2) Provide a copy of the remittance and supporting documentation to the Contracting Officer.

(End of Clause)

52.236-2 Differing Site Conditions (RFO DEVIATION Jan 2026)

(a) The Contractor shall promptly, and before the conditions are disturbed, give a written notice to the Contracting Officer of

(1) Latent physical conditions or subsurface conditions at the site which differ materially from those indicated in this contract; or

(2) Unknown physical conditions at the site, of an unusual nature, which differ materially from those ordinarily encountered and generally recognized as inherent in work of the character provided for in the contract.

(b)

(1) The Contracting Officer will investigate the site conditions promptly after receiving such a notice.

(2) If the conditions materially so differ and cause an increase or decrease in the Contractor's cost of, or the time required for, performing any part of the work under this contract an equitable adjustment must be made under this clause.

(c) No request for an equitable adjustment to the contract under this clause will be allowed, unless the Contractor has given the written notice required.

(d) No request for an equitable adjustment to the contract for differing site conditions will be allowed if made after final payment under this contract.

(End of Clause)

52.236-13 Alt I Accident Prevention (RFO DEVIATION Jan 2026) – Alternate I (Nov 1991)

(a) The Contractor shall provide and maintain work environments and procedures that—

(1) Safeguard the public and Government personnel, property, materials, supplies, and equipment exposed to Contractor operations and activities;

(2) Avoid interruptions of Government operations and delays in project completion dates; and

(3) Control costs in the performance of this contract.

(b) In addition, for contracts for construction or dismantling, demolition, or removal of improvements, the Contractor shall—

(1) Provide appropriate safety barricades, signs, and signal lights;

(2) Comply with the standards issued by the Secretary of Labor at 29 CFR part 1926 and 29 CFR part 1910 ; and

(3) Ensure that any additional measures the Contracting Officer determines to be reasonably necessary for the purposes are taken.

(c) If this contract is for construction or dismantling, demolition or removal of improvements with any Department of Defense agency or component, the Contractor shall comply with all pertinent provisions of the latest version of U.S. Army Corps of Engineers Safety and Health Requirements Manual, EM 385-1-1, in effect on the date of the solicitation.

(d)

(1) If the Contracting Officer becomes aware of any noncompliance with these requirements or any condition that poses a serious or imminent danger to the health or safety of the public or Government personnel, the Contracting Officer will notify the Contractor orally, with written confirmation, and request immediate initiation of corrective action.

(2) This notice, when delivered to the Contractor or the Contractor's representative at the work site, shall be deemed sufficient notice of the noncompliance and that corrective action is required.

(3) After receiving the notice, the Contractor shall immediately take corrective action.

(4) If the Contractor fails or refuses to promptly take corrective action, the Contracting Officer may issue an order stopping all or part of the work until satisfactory corrective action has been taken.

(5) The Contractor shall not be entitled to any equitable adjustment of the contract price or extension of the performance schedule on any stop-work order issued under this clause.

(e) The Contractor shall insert the substance of this clause, including this paragraph (e), in subcontracts.

(f) Before commencing the work, the Contractor shall-

(1) Submit a written proposed plan for implementing this clause. The plan shall include an analysis of the significant hazards to life, limb, and property inherent in contract work performance and a plan for controlling these hazards; and

(2) Meet with representatives of the Contracting Officer to discuss and develop a mutual understanding relative to administration of the overall safety program.

(End of Clause)

52.242-14 Suspension of Work (Apr 1984)

(a) The Contracting Officer may order the Contractor, in writing, to suspend, delay, or interrupt all or any part of the work of this contract for the period of time that the Contracting Officer determines appropriate for the convenience of the Government.

(b) If the performance of all or any part of the work is, for an unreasonable period of time, suspended, delayed, or interrupted (1)by an act of the Contracting Officer in the administration of this contract, or (2)by the Contracting Officer's failure to act within the time specified in this contract (or within a reasonable time if not specified), an adjustment shall be made for any increase in the cost of performance of this contract (excluding profit) necessarily caused by the unreasonable suspension, delay, or interruption, and the contract modified in writing accordingly. However, no adjustment shall be made under this clause for any suspension, delay, or interruption to the extent that performance would have been so suspended, delayed, or interrupted by any other cause, including the fault or negligence of the Contractor, or for which an equitable adjustment is provided for or excluded under any other term or condition of this contract.

(c) A claim under this clause shall not be allowed-

(1) For any costs incurred more than 20 days before the Contractor shall have notified the Contracting Officer in writing of the act or failure to act involved (but this requirement shall not apply as to a claim resulting from a suspension order); and

(2) Unless the claim, in an amount stated, is asserted in writing as soon as practicable after the termination of the suspension, delay, or interruption, but not later than the date of final payment under the contract.

(End of Clause)

52.243-5 Changes and Changed Conditions (RFO DEVIATION Oct 2025)

(a) The Contracting Officer may order changes in the drawings and specifications within the scope of the contract in writing.

(b) The Contractor shall promptly notify the Contracting Officer, in writing, of subsurface or latent physical conditions differing materially from those indicated in this contract or unknown unusual physical conditions at the site before proceeding with the work.

(c) If changes under paragraph (a) of this clause or conditions under paragraph (b) of this clause increase or decrease the cost of, or time required for performing the work, the Contracting Officer shall make an equitable adjustment (see paragraph (d) of this clause) upon submittal of a proposal for adjustment (hereafter referred to as proposal) by the Contractor before final payment under the contract.

(d) The Contracting Officer shall not make an equitable adjustment under paragraph (b) of this clause unless—

(1) The Contractor has submitted the required written notice and the Contracting Officer has received the notice; or

(2) The Contracting Officer waives the requirement for written notice.

(e) Failure to agree to any adjustment shall be a dispute under the Disputes clause.

(End of Clause)

52.246-13 Inspection – Dismantling, Demolition, or Removal of Improvements (Aug 1996)

(a) Unless otherwise designated by the specifications, all workmanship performed under the contract is subject to Government inspection at all times and places where dismantling or demolition work is being performed. The Contractor shall furnish promptly, and at no increase in contract price, all reasonable facilities, labor, and materials necessary for safe and convenient inspection by the Government. The Government shall perform inspections in a manner that will not unduly delay the work.

(b) The Contractor is responsible for damage to property caused by defective workmanship. The Contractor shall promptly segregate and remove from the premises any unsatisfactory facilities, materials, and equipment used in contract performance, and promptly replace them with satisfactory items. If the Contractor fails to proceed at once in a workmanlike manner with performance of the work or with the correction of defective workmanship, the Government may-

(1) By contract or otherwise, replace the facilities, materials, and equipment or correct the workmanship and charge the cost to the Contractor; and

(2) Terminate for default the Contractor's right to proceed. The Contractor and any surety shall be liable, to the extent specified in the contract for any damage or cost of repair or replacement.

(End of Clause)

52.252-6 Authorized Deviations in Clauses (Nov 2020)

(a) The use in this solicitation or contract of any Federal Acquisition Regulation (FAR) (48 CFR Chapter 1) clause with an authorized deviation is indicated by the addition of "(DEVIATION)" after the date of the clause.

(b) The use in this solicitation or contract of any Department of the Interior (DIAR) (48 CFR Chapter 14) clause with an authorized deviation is indicated by the addition of "(DEVIATION)" after the name of the regulation.

(End of Clause)

DOI-AAAP-0028 Electronic Invoicing and Payment Requirements – Invoice Processing Platform (IPP) (Feb 2021)

Payment requests must be submitted electronically through the U. S. Department of the Treasury's Invoice Processing Platform System (IPP).

"Payment request" means any request for contract financing payment or invoice payment by the Contractor. To constitute a proper invoice, the payment request must comply with the requirements identified in the applicable Prompt Payment clause included in the contract, or the clause 52.212-4 Contract Terms and Conditions - Commercial Items included in commercial item contracts. The IPP website address is: https://www.ipp.gov.

Under this contract, the following documents are required to be submitted as an attachment to the IPP invoice:

Copy of invoice including Purchase Order Number, service start/end dates, and invoice amount.

The Contractor must use the IPP website to register access and use IPP for submitting requests for payment. The Contractor Government Business Point of Contact (as listed in SAM) will receive enrollment instructions via email from the Federal Reserve Bank of St. Louis (FRBSTL) within 3 - 5 business days of the contract award date. Contractor assistance with enrollment can be obtained by contacting the IPP Production Helpdesk via email IPPCustomerSupport@fiscal.treasury.gov or phone (866) 973-3131.

If the Contractor is unable to comply with the requirement to use IPP for submitting invoices for payment, the Contractor must submit a waiver request in writing to the Contracting Officer with its proposal or quotation.

(End of Local Clause)

1452.201-70 Authorities and Delegations – Department of the Interior (Sep 2011)

(a) The Contracting Officer is the only individual authorized to enter into or terminate this contract, modify any term or condition of this contract, waive any requirement of this contract, or accept nonconforming work.

(b) The Contracting Officer will designate a Contracting Officer's Representative (COR) at time of award. The COR will be responsible for technical monitoring of the contractor's performance and deliveries. The COR will be appointed in writing, and a copy of the appointment will be furnished to the Contractor. Changes to this delegation will be made by written changes to the existing appointment or by issuance of a new appointment.

(c) The COR is not authorized to perform, formally or informally, any of the following actions:

(1) Promise, award, agree to award, or execute any contract, contract modification, or notice of intent that changes or may change this contract;

(2) Waive or agree to modification of the delivery schedule;

(3) Make any final decision on any contract matter subject to the Disputes Clause;

(4) Terminate, for any reason, the Contractor's right to proceed;

(5) Obligate in any way, the payment of money by the Government.

(d) The Contractor shall comply with the written or oral direction of the Contracting Officer or authorized representative(s) acting within the scope and authority of the appointment memorandum. The Contractor need not proceed with direction that it considers to have been issued without proper authority. The Contractor shall notify the Contracting Officer in writing, with as much detail as possible, when the COR has taken an action or has issued direction (written or oral) that the Contractor considers to exceed the COR's appointment, within 3 days of the occurrence. Unless otherwise provided in this contract, the Contractor assumes all costs, risks, liabilities, and consequences of performing any work it is directed to perform that falls within any of the categories defined in paragraph (c) prior to receipt of the Contracting Officer's response issued under paragraph (e) of this clause.

(e) The Contracting Officer shall respond in writing within 30 days to any notice made under paragraph (d) of this clause. A failure of the parties to agree upon the nature of a direction, or upon the contract action to be taken with respect thereto, shall be subject to the provisions of the Disputes clause of this contract.

(f) The Contractor shall provide copies of all correspondence to the Contracting Officer and the COR.

(g) Any action(s) taken by the Contractor, in response to any direction given by any person acting on behalf of the Government or any Government official other than the Contracting Officer or the COR acting within his or her appointment, shall be at the Contractor's risk.

(End of Clause)

WBR 1452.201-80 Contracting Officer's Representative's Authorities and Limitation – Bureau of Reclamation (May 2018)

(a) Performance of the work under this contract shall be subject to the technical direction of the Reclamation Contracting Officer's Representative (COR). The term "technical direction" is defined to include, without limitation:

(1) Inspecting and accepting or rejecting work performed under the contract.

(2) Representing the Government in technical phases of the work. The COR is responsible for the technical administration of the contract and will provide instructions and interpretations to the Contractor on all technical matters relating to the contract. The COR will supervise or oversee all Government technical and administrative personnel assigned to assist the COR.

(3) Reviewing and, where required by the contract, approving submittals of technical data, shop drawings, samples, literature, plans, or other data required to be delivered by the Contractor to the Government.

(b) The Contractor will receive a copy of the written COR designation from the Contracting Officer. It will specify the extent of the COR's authority to act on behalf of the Contracting Officer.

(c) Technical direction must be within the scope of work stated in the contract. Only the Contracting Officer is authorized to determine if a change is within the scope of the contract; therefore, the COR does not have the authority to, and may not, issue any technical direction that -

(1) Constitutes a direction of additional work outside the Contract requirements;

(2) Constitutes a change as defined in the contract clause entitled “Changes;”

(3) In any manner causes an increase or decrease in the total contract cost, or the time required for contract performance;

(4) Changes any of the expressed terms, conditions or specifications of the contract; or

(5) Interferes with the Contractor's right to perform the terms and conditions of the contract.

(d) All technical direction shall be issued in writing by the COR.

(e) The Contractor must proceed promptly with the performance of technical direction duly issued by the COR in the manner prescribed by this clause and within its authority under the provisions of this clause. If, in the opinion of the Contractor, any instruction or direction by the COR falls within one of the categories defined in (c)(1) through (c)(5) of this clause, the Contractor must not proceed and must notify the Contracting Officer in writing within five (5) working days after receipt of any such instruction or direction and must request the Contracting Officer to modify the contract accordingly. Upon receiving the notification from the Contractor, the Contracting Officer must -

(1) Advise the Contractor in writing after receipt of the Contractor's letter that the technical direction is within the scope of the contract effort and does not constitute a change under the Changes clause of the contract; or

(2) Advise the Contractor that the Government will issue a written change order.

(f) A failure of the Contractor and Contracting Officer either to agree that the technical direction is within the scope of the contract or to agree upon the contract action to be taken with respect to the technical direction will be subject to the provisions of the clause entitled “Disputes.”

(End of Clause)

1452.203-70 Restriction on Endorsements – Department of the Interior (Jul 1996)

The Contractor shall not refer to contracts awarded by the Department of the Interior in commercial advertising, as defined in FAR 31.205-1, in a manner which states or implies that the product or service provided is approved or endorsed by the Government, or is considered by the Government to be superior to other products or services. This restriction is intended to avoid the appearance of preference by the Government toward any product or service. The Contractor may request the Contracting Officer to make a determination as to the propriety of promotional material.

(End of Clause)

WBR 1452.223-81 Safety and Health – Bureau of Reclamation (Oct 2022)

(a) The Contractor shall not require any person employed in the performance of this contract (including subcontracts) to work under conditions which are unsanitary, hazardous, or dangerous to an employee's health or safety.

(b) Contractor shall comply with the most current version of the Bureau of Reclamation's Reclamation Safety and Health Standards (RSHS) and, if incorporated, 52.236-13 Accident Prevention.

The RSHS manual shall be obtained at: http://www.usbr.gov/safety/rshs/index.html

(c) Comply with the standards (29 CFR) issued by the Occupational Safety and Health Administration (OSHA), U.S. Department of Labor, www.osha.gov.

(d) In the event there is a conflict between the requirements contained in paragraphs (b) and (c) referenced herein, or in the Statement of Work (SOW) or Performance Work Statement (PWS), the more stringent requirement shall prevail.

(e) If required in the SOW or PWS, the Contractor shall submit a written proposed safety program as prescribed in the RSHS and the written specifications.

(f) The Contractor shall maintain an accurate record of and shall report to the Contracting Officer (or authorized representative) in the manner prescribed by the Contracting Officer, all cases of death, occupational diseases, or traumatic injury to employees or the public involved, and property damage in accordance with the RSHS and OSHA guidelines.

(g) If the contractor deems that an updated version of the RSHS constitutes a substantive change to the contract, affecting price or time (or both), the contractor may request a contract modification in accordance with the terms of the contract.

(End of Clause)

WBR 1452.232-81 Payment for Mobilization and Preparatory Work – Bureau of Reclamation (Mar 2022)

(a) General. Payment for the Mobilization and Preparatory Work line item of the schedule will be made as reflected herein. To the extent that this line item exceeds the percentage of total contract pricing as estimated by the Contracting Officer in WBR 1452.236-85, Instruction for Mobilization and Preparatory Work Schedule Line Item, payment will be made as reflected in Section (d)(5) below. Reclamation will make payment to the Contractor in accordance with this clause for operations including, but not limited to, those necessary for --

(1) Movement of personnel, equipment, supplies, and incidentals to the project site;

(2) The establishment of offices, buildings, plants and other facilities, at the site (excludes temporary buildings (e.g. storage sheds, shops, offices) and utilities listed in the Operations and Storage Areas clause of this contract;

(3) Payment of premiums for project bonds and insurance; and

(4) Other work and operations which must be performed or costs incurred incident to the initiation of meaningful work at the site and for which the contract does not otherwise provide for payment.

(b) Facilities and equipment covered by mobilization work.

(1) All facilities, plant, and equipment which are established at, or brought to, the site shall be deemed to be subject to the provisions of this paragraph unless the Contracting Officer specifically provides other written authorization for a particular item or items.

(2) The Contractor shall be solely responsible for the adequacy, efficiency, use, protection, maintenance, repair, and preservation of all facilities, plant, and equipment on site.

(3) The facilities, plant, and equipment covered by this paragraph shall not be dismantled or removed from the site prior to completion of the work under the contract without the written authorization of the Contracting Officer.

(c) Termination for default. Should the Contractor be terminated for default as provided by the Default clause of this contract --

(1) All facilities, plant, and equipment on the site shall be subject to the Government's right to take possession of and utilize such items for the purpose of completing the work;

(2) The Contractor shall provide evidence of encumbrances, liens, or other security interests, to the Contracting Officer; and

(3) Any encumbrance, lien, or other security interest on such facilities, plant, or equipment shall be subordinated to the Government's rights under the Default clause of this contract to utilize all facilities, plant, and equipment to complete the work under the contract.

(d) Payment. Payment for mobilization and preparatory work under paragraph (a) of this clause shall be made at the contractor lump-sum price for this item as contained in the Schedule. Progress payments for mobilization and preparatory work shall be made as follows --

(1) In accordance with paragraph (g) of the Payments under Fixed Price Construction Contracts clause of this contract and upon submission of a proper invoice, the Government will reimburse the Contractor for the total amount of premiums paid for performance and payment bonds as required by the Performance and Payment Bond Requirements clause of this contract and for any insurance which is specified as payable by the Government under this contract.

(2) Except as provided in (d)(1) above, progress payments for mobilization and preparatory work shall not be considered a separate division of work for the purposes of progress payments and shall be subject to retainage before payment of the total amount for this contract line item.

(3) When progress payments totaling 5 percent of the total original contract amount have been made by the Government for all other work accomplished under the contract, the Government shall pay the Contractor 50 percent of the mobilization and preparatory work contract line item amount or **5** percent of the total original contract amount (whichever is the lower) exclusive of any payment already made to the Contractor for performance and payment bond premiums and specified insurance under subparagraph (d).

(4) When progress payments totaling 10 percent of the total original contract amount have been made by the Government for all other work accomplished under the contract, the balance of the amount for the mobilization and preparatory work contract line item or **5** percent of the total original contract amount (whichever is the lower) shall be paid to the contractor.

(5) If the contract amount for mobilization and preparatory work exceeds the total of the payments allowed under (3) and (4) above, the balance shall be paid when the contract work is substantially complete as determined by the Contracting Officer.

(End of Clause)

WBR 1452.236-84 Preservation of Cultural Resources (Mar 2022)

(a) Definitions.

"Cultural items" as defined by Native American Graves Protection and Repatriation Act (NAGPRA) include Native American human remains, funerary objects, sacred objects, and objects of cultural patrimony.

"Cultural resources" is a broad term that includes prehistoric, historic, architectural, and traditional cultural properties; specific items include, but are not limited to, human skeletal remains, archaeological artifacts, records, and material remains related to such properties.

"Funerary objects" means Native American items that, as part of the death rite or ceremony of a culture, are reasonably believed to have been placed intentionally at the time of death or later with or near individual human remains.

"Human remains" means the physical remains of the body of a person.

"Native American" means of, or relating to, a tribe, people, or culture that is indigenous to the United States.

"Sacred objects" means Native American items that are specific ceremonial objects needed by traditional Native American religious leaders for the practice of traditional Native American religions by their present-day adherents. These items are specifically limited to objects that were devoted to a traditional Native American religious ceremony or ritual and which have religious significance or function in the continued observance or renewal of such ceremony.

"Objects of cultural patrimony" means Native American items having ongoing historical, traditional, or cultural importance central to the Native American tribe or Native Hawaiian organization itself, rather than property owned by an individual tribal or organization member. These objects are of such central importance that they may not be alienated, appropriated, or conveyed by any individual tribal or organization member.

(b) General. Federal legislation provides for the protection and preservation of cultural resources that may be impacted or altered as a result of any Federal project, activity, or program or federally licensed or assisted project, activity, or program.

(c) Discovery of Resources. Should the Contractor, or any of the Contractor's employees, subcontractors, or parties operating or associated with the Contractor, in the performance of this contract discover evidence of possible cultural resources, the Contractor shall immediately cease work at that location and provide oral notification to the contracting officer, giving location and nature of the findings. The Contractor shall forward a written report of findings to the Contracting Officer within 48 hours.

(i) If a cultural resource is determined by Reclamation to be a Native American cultural item, then the Contractor shall cease the activity in the area of the discovery, make a reasonable effort to protect the items discovered, and wait for written approval from the Contracting Officer before resuming activity.

(ii) If the discovery occurs on tribal lands, the Contractor shall immediately orally notify the responsible tribal official and the Contracting Officer and follow with written confirmation within 48 hours to the responsible tribal official and the contracting officer. (The contracting officer will supply the name and phone number of the tribal official.

(iii) The Contractor shall exercise care so as not to disturb or damage any cultural resources discovered during the execution of this contract and shall provide such cooperation and assistance as may be necessary to preserve the findings for removal or other disposition by Reclamation. The Contractor shall not resume work in the area of a discovery until written notice to proceed is received from the contracting officer.

(d) Approval of Use Areas and Borrow Sources. If the Contractor proposes to use a location other than an approved location (approved locations to be provided by the contracting officer), the location(s) must first be approved for use by the contracting officer. When considering an unapproved use area or borrow source, the Contractor shall submit a map showing the location

to the contracting officer at least 45 calendar days in advance of any proposed use. The Contractor or his subcontractors shall take no action to use or alter the proposed location until written approval is provided by the contracting officer.

(e) Compensation for Delays. Where appropriate by reason of discovery, the contracting officer may order changes in the schedule or work. If such delays or changes are ordered, any equitable adjustment under the contract will be provided in accordance with the applicable clauses of the contract.

(f) Subcontractors. The Contractor shall insert this clause in all subcontracts that involve performance of work on job site terrain.

(g) Cost. Except as provided in subsection (e) above, the cost of complying with this contract clause shall be included in the prices offered in the schedule for other items of work.

(h) Government Access. The Contractor's arrangement with landowners shall permit the Government or its representatives access to the land to identify cultural resources and conduct appropriate inspections during the Contractor's use of the area or during material procurement.

(End of Clause)

WBR 1452.237-80 Alt III Security Requirements – Bureau of Reclamation (Mar 2022) – Alternate III (Mar 2022)

(a) General Security Requirements:

(1) This clause addresses security requirements, including general procedural requirements, information security requirements, contractor employee suitability requirements, identification card requirements, site security requirements, vessel exclusion barriers, and information technology security requirements. Within this clause, COR means Contracting Officer's Representative. If there is no COR appointed and identified to the Contractor, the term instead will mean the Program Manager or any other authorized individual responsible for technical oversight under the contract. “Work site” means the Government facility, office, construction site, and any other area within the Government office or facility that the Contractor must access to accomplish work under this contract.

(2) The work performed under this contract shall only be accomplished by individuals (in the employment of the Contractor or any subcontractors) whose conduct and behavior is consistent with the efficiency of the Federal Service and the requirements of this contract, and who are acceptable to the contracting officer. If Reclamation finds a Contractor employee to be unsuitable or unfit for his or her assigned duties, the contracting officer will direct the Contractor to remove the individual from the contract and access to the Federal facility at which the contract activities are occurring.

(3) The Contractor’s employees governed by this contract may need access to sensitive information and/or sensitive areas. The Federal Government (Government) reserves the right, in its sole discretion, to determine suitability of Contractor personnel and deny access to any sensitive information or project specific area to any personnel for any cause.

(4) The Contractor is responsible for informing and ensuring compliance by its employees with any applicable security procedures of the Government facility where work may be performed under this contract.

(5) Any Contractor employee that will have access to a Federally-controlled facility or information system will be required to have a Government-issued identification card, consisting of a Personal Identity Verification (PIV) Card, a temporary identification card, or a visitor badge. (Note: within the Department of the Interior this card is known as a DOI Access Card.) During performance of the contract, the Contractor shall keep the COR apprised of any changes in personnel, or changes in personnel access or duration, to ensure that performance is not delayed by compliance with credentialing processes.

(6) A Contractor employee will not be provided access to a Government facility or information system until a Government PIV Card, temporary identification card, or visitor identification badge has been issued to the Contractor employee. For those individuals that will be receiving a PIV Card, the Government may, at its discretion, issue a temporary identification card or visitor identification badge after the electronic background investigation forms have been received and the investigation is initiated.

(7) All Contractor employees shall access the facility via the facility's entry screening system and visibly display the Government-issued PIV Card, temporary identification card, or visitor identification badge at all times. Contractor employees must visibly wear the Government-issued identification card at all times they are on Government facilities. Contractor employees are responsible for the safekeeping of all Government-issued identification cards, whether on-site or off-site. Cards that have been lost, damaged, or stolen must be reported to the COR and DOI Access Sponsor immediately, but not later than within 24 hours. The Contractor shall return all identification cards and card keys and any other Government property and information upon completion of performance or when personnel depart permanently or for a period of 7 days or more. The Contractor may be required to turn in access control cards or identification cards on a daily basis.

(8) Misuse or loss of access control or identification cards, or failure to comply with required surrender of such cards may, at Government discretion, result in Contractor personnel being denied access to the work site, at no cost to Government. The Contractor may be charged up to $500 for each occurrence for any required replacement of Government-issued access control or identification cards due to loss or misuse. At the end of contract performance, or when a Contractor employee is no longer working under this contract, the Contractor shall ensure that all access control and identification cards are returned to the COR.

(9) All Contractor personnel, including subcontractor personnel, with access to the work site shall be U.S. citizens or foreign individuals legally residing in, or legally admitted to, the U.S. For all non-U.S. citizens working under this contract, irrespective of length of time working on the contract, the Contractor shall provide to the COR, legible and valid copies

of the individual's passport and visa (unless individual is on the Visa Waiver Program) a minimum of 14 calendar days prior to beginning work or arriving at the facility. A driver's license is not acceptable identification. In addition, a completed form I-94 shall be submitted to the COR upon the individual's arrival at the work facility and prior to beginning work.

(10) The Contractor shall report all contacts with entities, individuals, and counsel/representatives (including foreign entities and foreign nationals) who seek in any way to obtain unauthorized access to sensitive information or areas. The Contractor shall report any violations of contract provisions, laws, executive orders, regulations, and guidance to the contracting officer. The Contractor shall report any information raising a doubt as to whether an individual's eligibility for continued employment or access to sensitive information is consistent with the interests of National Security and the Public Trust.

(11) Unsanctioned, negligent, or willful inappropriate action on the part of the Contractor (or its employees) may result in termination of the contract or removal of some Contractor employees from Reclamation facilities at no cost to the Government. These actions include, but are not limited to, exploration of a sensitive system and/or information, introduction of unauthorized and/or malicious software, inappropriate release of sensitive information, or failure to follow prescribed access control policies and/or security procedures. Failure to comply with Reclamation policies, procedures, or other published security requirements may result in termination of the contract or removal of some contracted employees from Reclamation buildings and/or facilities at no cost to the Government.

(12) All provisions of this clause shall equally apply to all subcontractors. The Contractor shall incorporate the substance of this clause in all subcontracts.

(13) These security requirements apply to all sections of this Contract including Contract Drawings and other Contract Specifications as applicable. Related documents include other general provisions of Construction or Operations and Maintenance type Contracts, including FAR clauses by reference or as amended by related documents.

(b) Information Security Requirements.

(1) Sensitive Information. The term "sensitive information" means any information which warrants a degree of protection and administrative control as defined by Reclamation or that meets the criteria for exemption from public disclosure set forth under Sections 552 and 552a of Title 5, United States Code: the Freedom of Information Act and the Privacy Act. Sensitive information is generally categorized as CONTROLLED UNCLASSIFIED INFORMATION (CUI), but in some cases may include other unclassified information. (The protection of National Security information is beyond the scope of this clause. If any work on National Security information is required under this contract, it is addressed under other contract clauses.) The Contractor shall protect this type of information from unauthorized release into public domain, or to unauthorized persons, organizations, or subcontractors. Information which, either alone or in aggregate, is deemed sensitive by Reclamation shall be handled and protected in accordance with Reclamation Directives and Standards SLE 02-01 Identifying and Safeguarding Controlled Unclassified

Information (CUI), which is available from the COR or at http://www.usbr.gov/recman/DandS.html#sle.

(i) Any Government-furnished information or material does not become the property of the Contractor and may be withdrawn at any time. Upon expiration or termination of the contract, all documents released to the Contractor and any material created using data from such documents shall be returned to the COR for final disposition. Government-furnished information residing on any electronic systems (laptops, servers, desktops, media) shall be deleted from those systems using a COR-approved data erasure solution. Only with prior authorization from the contracting officer may the Contractor retain the material. The Contractor or subcontractor shall not disclose or release the materials provided to the Contractor to any individuals of the Contractor's organization not directly engaged in providing services under the contract or that do not have a valid need-to-know. All technical data provided to the Contractor by the Government shall be protected from public or private disclosure in accordance with the markings printed on them. All other information relating to the items to be delivered or the services to be performed under this contract shall not be disclosed by any means without prior approval of the contracting officer. Prohibited dissemination or disclosure includes, but is not limited to: permitting access to such information by foreign nationals or by immigrant aliens who may be employed by the Contractor, publication of technical or scientific papers, advertising, disclosure to Contractor staff not investigated and deemed acceptable at the appropriate information sensitivity level, and any other public release. The Contractor shall maintain, and furnish upon request of the contracting officer, records of the names of individuals who have access to sensitive material in its custody and the sensitive material to which the individuals had access. All questions regarding information security, access, and control shall be referred to the COR.

(ii) The Contractor shall not release to anyone outside the Contractor's organization any sensitive, or otherwise protected information, regardless of medium in which it is contained (for example, film, tape, document, electronic), pertaining to any part of this contract or any Reclamation program or activity, unless the contracting officer has given prior written approval. This includes, but is not limited to, news releases, marketing promotions, articles, interviews, reports, social media posts, and any other media releases. Requests for approval shall identify the specific information to be released, the medium to be used, the purpose for the release, and a description of the need-to-know. The Contractor shall submit its request to the contracting officer ten business days before the proposed date for release. Subcontractors shall submit requests for authorization to release through the prime Contractor to the contracting officer.

(iii) The Contractor shall notify the COR immediately when known or suspected loss/compromise of sensitive information or other documents, notes, drawings, sketches, reports, photographs, exposed film or similar information which may affect the security interests of Government has occurred. This requirement extends to employees and other personnel working on behalf of the Contractor, and expands responsibility to include prompt reporting of security issues, including observed or subsequently discovered efforts by unauthorized persons to gain unauthorized access to sensitive information.

(2) Classified Information.

(i) The disclosure of U.S. Government documents by third parties can result in damage to our national security. While this contract may not deal directly with classified information, each contractor is obligated to protect classified information pursuant to all applicable laws and to use Government information technology systems in accordance with agency procedures so that the integrity of such systems is not compromised.

(ii) Unauthorized disclosures of classified documents (whether in print, on a blog, or on websites, or other electronic or non-electronic media) do not alter the documents' classified status or automatically result in declassification of the documents. To the contrary, classified information, whether or not already posted on public websites or disclosed to the media, remains classified, and must be treated as such by Federal employees and contractors, until it is declassified by an appropriate U.S. Government authority. Executive Order 13526, Classified National Security Information (December 29, 2009), Section 1.1.(c) states, "Classified Information shall not be declassified automatically as a result of any unauthorized disclosure of identical or similar information." Although the Department has taken steps to prevent access to publicly disclosed classified materials from Departmental computers, it is important to understand our continuing duties and responsibilities in this regard.

(iii) Contractors (which include all employees of the contractor, as well as subcontractors and its employees performing work for the contractor) are reminded of the following obligations with respect to the treatment of classified information and the use of unclassified government information technology systems: **None.**

(iv) The contractor shall not, while using unclassified Government computers or other devices (such as phones or tablets) access documents that are marked classified (including classified documents made publicly available by a third party), as doing so risks that material still classified will be placed onto unclassified systems. This requirement does not restrict contractor access to unclassified, publicly available news reports (and other unclassified material) that may in turn discuss classified material, as distinguished from access to underlying documents that themselves are marked classified (including if the underlying classified documents are available on public web sites or otherwise in the public domain).

(v) For contracts that require access to classified information, the contractor is responsible for obtaining the required national security clearance through the Department of the Defense National Industrial Security Program Operating Manual (NISPOM). Any classified contracts will be coordinated through the Reclamation Chief Security Officer, or for IT requirements, the Bureau Chief Information Security Officer. No contractor shall access classified information unless proper clearances have been obtained and transmitted to Reclamation. For further information, refer to 443 DM 1 or DOD NISPOM 5220.22-M dated February 28, 2006 (incorporating change 2 dated May 18, 2016).

(vi) Classified information shall not be removed from official premises.

(vii) Classified information shall not be disclosed without proper authorization.

(c) Reserved

(d) Reserved

(e) Site Security Requirements.

(1) General Description. This section provides provisions to ensure the full security integrity of the facility and personnel working at the facility. The work of this section may involve interfaces with a number of Government security personnel, normally coordinated through the designated COR. The Contractor is responsible for ensuring that activities are accomplished in a manner that complies fully with applicable security statutes, regulations, policies, directives, and standards.

(2) Government Security Personnel. When and where applicable, personnel may be assigned to control access, secure materials or activities at the work site, or escort Contractor personnel in sensitive areas. Personnel may include security managers, security guards, security contractors acting as agents of the Government, law enforcement personnel, or other contractors or employees. These individuals may be used to ensure the overall security and integrity of the site or building and provide controlled access. These individuals may conduct inspections of all workers, vehicles, equipment, or materials entering, or re-entering the work site. The inspection may be done visually, with walk-through and/or hand-held metal detectors, or by other means as may be deemed necessary by Reclamation.

(3) Contractor Guard Force. At the Contractor's sole discretion, and at the Contractor's own expense, with prior written Government approval, a Contractor may be authorized to hire its own guards to secure Contractor-owned equipment and/or to protect Contractor employees or subcontractors. If such a relationship is permitted, the Contractor shall be exclusively liable for all guard activities to include action or inaction of Contractor's guard personnel. The Government will not offer nor provide any indemnification. Contractor shall be solely responsible for guards at all times to include any supervision, oversight, and for the development of local guard orders and/or procedures. The Contractor shall be responsible for coordinating all guard activities with the COR and shall develop and submit to the COR, for advance approval, any guard orders and/or guard procedures.

(4) Additional Security-Related Submittals

(i) Visitor List. The Contractor shall furnish to the COR, in advance, notification of visit of any Contractor-sponsored visitor to a Government-controlled facility. This notification should be in writing and must include the purpose or nature of the visit, the full name of the visitor, and the full name and phone number of the designated sponsor who will be physically responsible for escorting the visitor for the duration of the scheduled visit.

(ii) Delivery Schedule. The Contractor shall furnish to the COR, in advance, a schedule for all deliveries. This list shall include estimated delivery date, time, nature of the materials being delivered, and – where available – the name of delivery company and type of vehicle.

(iii) Explosives Security Plan. The Contractor shall furnish to the COR for approval, in advance, an explosives security plan at any work site where explosives will be stored or used.

(5) General Provisions.

(i) General. The Contractor shall comply with the Government's site security procedures as specified, and as requested subsequent to award of Contract. Failure of the Contractor to comply with required access controls, information handling procedures, or any other security controls or procedures, may result in revocation of Contractor personnel access to the work site. The Government reserves the right to modify or clarify security provisions of this contract based on changing political and civil circumstances, and perceived threats to personnel or the facility.

(ii) Security Facilities and Equipment. The Contractor shall use security facilities and equipment only for the purposes intended and as directed by the contracting officer. The Contractor shall comply with the Government's instructions for use of secure storage areas, site enclosure and gates, temporary security lighting, building space enclosure, and lockup devices and systems established for detection, monitoring, signaling, and alarming field office facilities. Measures necessary to secure the integrity of materials, equipment, and tools installed or used in furtherance of this contract shall be at no cost to the Government.

(iii) Security Personnel Availability/Work Schedules. The Contractor shall notify the COR at least 48 hours in advance of any projected work which might impact on security or require the scheduling of extended security personnel support. The Contractor shall provide a weekly work schedule, such as anticipated delivery of materials, use of explosives or heavy machinery, and extra time needed for continuous or inherently lengthy construction or project specific operations (such as concrete placement).

(iv) Deliveries. The Contractor shall provide at least one day's advance notice of major deliveries, including time of arrival and trucks/carriers/documentation to be expected for arrival at work site. The Contractor shall provide reasonable advanced notice of deliveries which must be accommodated/accepted at times other than the Government's established working hours. Failure to provide adequate advanced notice may result in delivery delays at the Contractor's expense.

(v) Site Access. All Contractor personnel will be issued appropriate identification and must comply with all local access control procedures. The Government reserves the exclusive right to refuse or disallow any vehicular or pedestrian access to any Government-controlled facility, lands, or for any deliveries to the work site, regardless if access was scheduled or unscheduled.

(vi) Inspections and Searches. The Government reserves unqualified and unlimited right at any time to conduct security-related inspections or searches of work, material, equipment, personnel, and temporary facilities at the work site. The Contractor shall afford unrestricted access to work and allow surveillance and inspection by any Government personnel as authorized by the COR. The Government reserves the

right to conduct searches of articles and personal effects of all Contractor personnel, both at point of entry and exit from the work site or Government facility. All Contractor personnel entering and leaving the work site may be required to pass through a Walk-Through-Metal-Detector device and/or other detection devices.

(vii) After Duty Hours. No Contractor personnel shall be permitted access to the work site after the Government's established working hours without prior authorization from the Government. All personnel seeking access to the site after the Government's established working hours may be required to sign in and out in a visitor's log that may be maintained by the on duty security personnel (if any).

(viii) Access Procedures at Sensitive Areas. In some instances, the Contractor may be required to erect temporary security barriers and doors to isolate a sensitive area as instructed by the Government. The Contractor may be required to install locks and thereafter control access. The Contractor shall comply with the Government's requirement for limited and escorted access to the sensitive area. The Contractor shall notify the COR at least one day prior to each requested access to the sensitive area that is outside of the Government's established working hours.

(ix) Reported Violations. Where an indication, report, or observation of unauthorized access or performance of unauthorized work has occurred, the Government reserves the right to stop work and deny access until the circumstance and work can be investigated, inspected, tested, and resolved. The entire cost of such stoppages and resolutions shall be borne by Contractor, except when alleged violations of established security requirements, after investigation, are found not to be the fault of the Contractor.

(x) Briefings. Contractor personnel who will be assigned to this project, and who will have access to the work site, may be required to attend Government-conducted security briefings. The Government reserves the right to conduct security briefings for Contractor personnel and visitors at all levels of involvement in performance of work and maintenance of security. Required briefings may include, but are not limited to, the following: Information Security, Site Security Requirements and Procedures, Security Awareness, Delivery Methods and Inspections, Storage Requirements, Reporting Requirements, Supervisory Procedures, Contractor Employee Conduct, Visitor Control, and Threats.

(xi) Key Control. Control of keys/access codes and lock combinations is essential for the Government's project security. The Contractor shall not allow keys or access codes to be duplicated or removed from the work site, nor allow lock combinations to be divulged without specific written advanced authorization from the COR. Such loss of control, observed or suspected, may result in a requirement to change locks involved at the Contractor's expense. At the direction of the COR, the Contractor shall provide duplicate keys and lock combinations to Government security personnel when requested for the purpose of security inspections and emergency actions, including keys, combinations, and access codes needed for unrestricted access to every area and element of the project. The Contractor may be required to establish a key control program that is acceptable to the Government for Government-issued keys and for heavy machinery parked at the construction site (if this is a construction contract).

(xii) Vehicle Control. In general, parking of vehicles on the work site shall not be permitted, except for tractors, cranes, and similar equipment used directly in performance of work, for delivery of materials/supplies, and for removal of waste and surplus material. The Government may designate an approved contractor employee parking area. Upon entering the work site, vehicles and drivers may be subject to search and inspection. The Contractor shall obtain authorization from the COR to park the Contractor's official vehicles and motorized vehicular construction equipment that are required/desired to be parked on the work site. Vehicles in violation may be towed off the work site at the Contractor's expense. Where Government-designated employee parking is not available, parking of construction employees' automobiles and similar transportation vehicles may be excluded from the work site. It is the Contractor's responsibility to arrange for suitable accommodation for these vehicles.

(xiii) Prohibited/Restricted Items. Prohibited/restricted items and activities on the work site include but are not limited to the following: firearms and other weapons, except as specifically authorized by the COR in compliance with state and Federal laws and regulations; drugs, including narcotics, barbiturates, marijuana, alcoholic beverages, and similar substances, except for use with valid medical prescription; and explosives.

(xiv) Exceptions for Explosives. When needed for use in specifically limited amounts and controlled circumstances for construction work, explosives may be brought onsite with written prior authorization from the COR. As a hazardous material, the Contractor shall treat the use of explosives in accordance with regulations and guidance provided by Federal, State, and local authorities. The storage of explosives shall be in accordance with requirements of the Bureau of Alcohol, Tobacco, and Firearms or the State in which they are stored. If onsite storage of explosives is necessary, explosives shall be stored at a pre-designated, secure site approved by the COR. Prior to Government approval of storage, the Contractor shall develop and submit to the COR a complete storage/security/retrieval plan for approval. The storage/security plan can be included in a "Blasting Safety Plan." The plan shall make accommodations for surveillance, detection, and response. Explosives firing systems shall be stored off-site and under no circumstances shall be stored together with explosives.

(xv) Photography. The use of photographic equipment and taking of photographs shall only be allowed as authorized by the COR.

(f) Reserved

(End of Clause)

1452.228-70 Liability Insurance – Department of the Interior (Jul 1996)

(a) The Contractor shall procure and maintain during the term of this contract and any extension thereof liability insurance in form satisfactory to the Contracting Officer by an insurance

company which is acceptable to the Contracting Officer. The named insured parties under the policy shall be the Contractor and the United States of America. The amounts of the insurance shall be not less than as follows:

Workers' Compensation And Employer's Liability
$100,000 minimum coverage

General Liability
$500,000 per occurrence

Automobile Liability
$200,000 each person / $500,000 each occurrence / $ 20,000 property damage

(b) Each policy shall have a certificate evidencing the insurance coverage. The insurance company shall provide an endorsement to notify the Contracting Officer 30 days prior to the effective date of cancellation or termination of the policy or certificate; or modification of the policy or certificate which may adversely affect the interest of the Government in such insurance. The certificate shall identify the contract number, the name and address of the Contracting Officer, as well as the insured, the policy number and a brief description of contract services to be performed. The contractor shall furnish the Contracting Officer with a copy of an acceptable insurance certificate prior to beginning the work.

(End of Clause)

WBR 1452.243-80 Modification Proposals – Bureau of Reclamation (Mar 2022)

(a) In submitting any proposal for a modification under this contract (including any proposal for an equitable adjustment resulting from a change under the FAR Changes clause of this contract), the contractor shall:

(1) Comply with the contract time limits for submission of a proposal or as specified by the contracting officer;

(2) Apply the contract cost principles and procedures in Part 31 of the Federal Acquisition Regulation (FAR) in effect on the date of this contract;

(3) Furnish a breakdown of all costs estimated to complete the work required by the modification (i.e., cost of added work, incurred cost of deleted work already performed, estimated cost of deleted work not yet performed, and net cost of the modification) to include all costs associated with materials (identified by item and quantity), equipment (identified by item, quantity and whether contractor-owned or rented), categories of direct labor, bond and insurance premium adjustments, subcontracts, overhead and other indirect costs, profit/fee, and any other pricing information requested by the contracting officer, in sufficient detail to permit an analysis of fair and reasonable price;

(4) Furnish a written justification for any requested time extensions; and

(5) For any pricing adjustment expected to exceed the threshold at FAR 15.403-4 requiring certified cost or pricing data (considering both increases and decreases) --

(i) Submit certified cost and pricing data using the format specified in Table 15-2 of FAR 15.408 unless the contracting officer agrees that an exception applies under the circumstances set forth in FAR 15.403-1;

(ii) Certify in substantially the format prescribed in FAR 15.406-2 that to the best of its knowledge and belief, the data are accurate, complete and current as of the date of agreement on the negotiated price of the modification; and

(iii) Comply with the requirements of either the FAR 52.215-12 Subcontractor Certified Cost or Pricing Data clause or the FAR 52.215-13 Subcontractor Certified Cost or Pricing Data -- Modifications clause of this contract when the adjustment includes a subcontract modification involving a pricing adjustment expected to exceed the threshold at FAR 15.403-4 requiring certified cost or pricing data.

(b) Under the FAR Changes clause of this contract, failure of the contractor to timely assert its right for an adjustment or to submit a proposal for an adjustment by the date specified in the clause (or another date specified by the contracting officer) may result in a unilateral adjustment of the contract by the contracting officer pursuant to the FAR 52.233-1 Disputes clause of this contract.

(End of Clause)

Contract Attachments

Attachment No. 0001……General Decision No. MT20260077, Modification No. 1, 5/18/2026

"General Decision Number: MT20260077 05/18/2026

State: Montana

Construction Types: Heavy

Counties: Montana Counties of
Blaine, Chouteau, Fergus, Glacier,
Golden Valley, Hill, Judith Basin,
Liberty, Musselshell, Petroleum,
Pondera, Sweet Grass, Teton and
Wheatland

Modification Number	Publication Date
0	01/02/2026
1	05/18/2026

ELEC0044-002 06/01/2021

	Rates	Fringes
LINE CONSTRUCTION: (1) LINEMAN	$ 48.65	9.40
LINE CONSTRUCTION: (3) GROUNDMAN	$ 29.09	8.36

ELEC0233-022 06/01/2024

	Rates	Fringes
ELECTRICIAN (BLAINE, CHOUTEAU, FERGUS, GLACIER, JUDITH BASIN, LIBERTY, PETROLEUM, PONDERA, WHEATLAND, HILL, AND TETON COUNTIES)	$ 38.51	17.09

ELEC0532-014 06/01/2025

	Rates	Fringes
ELECTRICIAN (GOLDEN VALLEY AND MUSSLESHELL COUNTIES)	$ 43.92	18.17

ELEC0532-017 06/01/2025

	Rates	Fringes
ELECTRICIAN (SWEET GRASS COUNTY)	$ 41.94	16.97

ENGI0400-011 05/01/2025

	Rates	Fringes
POWER EQUIPMENT OPERATOR:, ZONE 1: (7) CRANES, 150 TONS TO INCLUDING 250 TONS (ADD $1.00 FOR EVERY 100 TONS OVER 250 TONS); CRANE, STIFF-LEG OR DERRICK; HELICOPTER HOIST; CRANE, TOWER (ALL). ZONE DEFINITIONS FOR POWER EQUPMENT OPERATORS: THE ZONE HOURLY RATES APPLICABLE TO EACH PROJECT SHALL BE DETERMINED BY MEASURING THE ROAD MILES OVER THE SHORTEST PRACTICAL MAINTAINED ROUTE FROM THE NEAREST COUNTY COURT HOUSE OF THE FOLLOWING LISTED TOWNS TO THE CENTER OF THE JOB: BILLINGS, BOZEMAN, BUTTE, GREAT FALLS, HELENA, KALISPELL, MISSOULA		

ZONE 1: 0 TO 30 MILES - BASE PAY ZONE 2: 30 TO 60 MILES - BASE PAY + $3.50 ZONE 3: OVER 60 MILES - BASE PAY + $5.50.....$ 42.23 16.20

POWER EQUIPMENT OPERATOR: ZONE 1: (6) CRANES 75 TO AND INCL. 149 TONS; CRANES, WHIRLEY (ALL). ZONE DEFINITIONS FOR POWER EQUPMENT OPERATORS: THE ZONE HOURLY RATES APPLICABLE TO EACH PROJECT SHALL BE DETERMINED BY MEASURING THE ROAD MILES OVER THE SHORTEST PRACTICAL MAINTAINED ROUTE FROM THE NEAREST COUNTY COURT HOUSE OF THE FOLLOWING LISTED TOWNS TO THE CENTER OF THE JOB: BILLINGS, BOZEMAN, BUTTE, GREAT FALLS, HELENA, KALISPELL, MISSOULA ZONE 1: 0 TO 30 MILES - BASE PAY ZONE 2: 30 TO 60 MILES - BASE PAY + $3.50 ZONE 3: OVER 60 MILES - BASE PAY + $5.50.....$ 41.15 16.20

POWER EQUIPMENT OPERATOR: ZONE 1: (5) CRANES 45 TONS TO AND INCL. 74 TONS. ZONE DEFINITIONS FOR POWER EQUPMENT OPERATORS: THE ZONE HOURLY RATES APPLICABLE TO EACH PROJECT SHALL BE DETERMINED BY MEASURING THE ROAD MILES OVER THE SHORTEST PRACTICAL MAINTAINED ROUTE FROM THE NEAREST COUNTY COURT HOUSE OF THE FOLLOWING LISTED TOWNS TO THE CENTER OF THE JOB: BILLINGS, BOZEMAN, BUTTE, GREAT FALLS, HELENA, KALISPELL, MISSOULA ZONE 1: 0 TO 30 MILES - BASE PAY ZONE 2: 30 TO 60 MILES - BASE PAY + $3.50 ZONE 3: OVER 60 MILES - BASE PAY + $5.50.....$ 40.07 16.20

POWER EQUIPMENT OPERATOR: ZONE 1: (4) CRANES 25-44 TONS. ZONE DEFINITIONS FOR POWER EQUPMENT OPERATORS: THE ZONE HOURLY RATES APPLICABLE TO EACH PROJECT SHALL BE DETERMINED BY MEASURING THE ROAD MILES OVER THE SHORTEST PRACTICAL MAINTAINED ROUTE FROM THE NEAREST COUNTY COURT HOUSE OF THE FOLLOWING LISTED TOWNS TO THE CENTER OF THE JOB: BILLINGS, BOZEMAN, BUTTE, GREAT FALLS, HELENA, KALISPELL, MISSOULA ZONE 1: 0 TO 30 MILES - BASE PAY ZONE 2: 30 TO 60 MILES - BASE PAY + $3.50 ZONE 3: OVER 60 MILES - BASE PAY + $5.50.....$ 38.98 16.20

POWER EQUIPMENT OPERATOR: ZONE 1: (3) MECHANIC, SCRAPER. ZONE DEFINITIONS FOR POWER EQUPMENT OPERATORS: THE ZONE HOURLY RATES APPLICABLE TO EACH PROJECT SHALL BE DETERMINED BY MEASURING THE ROAD MILES OVER THE SHORTEST PRACTICAL MAINTAINED ROUTE FROM THE NEAREST COUNTY COURT HOUSE OF THE FOLLOWING LISTED TOWNS TO THE CENTER OF THE JOB: BILLINGS, BOZEMAN, BUTTE, GREAT FALLS, HELENA, KALISPELL, MISSOULA ZONE 1: 0 TO 30 MILES - BASE PAY ZONE 2: 30 TO 60 MILES - BASE PAY + $3.50 ZONE 3: OVER 60 MILES - BASE PAY + $5.50.....$ 24.34 10.40

POWER EQUIPMENT OPERATOR: ZONE 1: (2) CRANE OILER, BULLDOZER, ROLLER (DIRT AND GRADE COMPACTION), EXCAVATOR. ZONE DEFINITIONS FOR POWER EQUPMENT OPERATORS: THE ZONE HOURLY RATES APPLICABLE TO EACH PROJECT SHALL BE DETERMINED BY MEASURING THE ROAD MILES OVER THE SHORTEST PRACTICAL MAINTAINED ROUTE FROM THE NEAREST COUNTY COURT HOUSE OF THE FOLLOWING LISTED TOWNS TO THE CENTER OF THE JOB: BILLINGS, BOZEMAN, BUTTE, GREAT FALLS, HELENA, KALISPELL, MISSOULA ZONE 1: 0 TO 30 MILES - BASE PAY ZONE 2: 30 TO 60 MILES - BASE PAY + $3.50 ZONE 3: OVER 60 MILES - BASE PAY + $5.50.....$ 23.94 10.40

POWER EQUIPMENT OPEARTOR: ZONE 1: (1)A-FRAME TRUCK CRANE, OILER (EXCEPT CRANE). ZONE DEFINITIONS FOR POWER EQUPMENT OPERATORS: THE ZONE HOURLY RATES APPLICABLE TO EACH PROJECT SHALL BE DETERMINED BY

MEASURING THE ROAD MILES OVER THE SHORTEST PRACTICAL MAINTAINED ROUTE FROM THE NEAREST COUNTY COURT HOUSE OF THE FOLLOWING LISTED TOWNS TO THE CENTER OF THE JOB: BILLINGS, BOZEMAN, BUTTE, GREAT FALLS, HELENA, KALISPELL, MISSOULA ZONE 1: 0 TO 30 MILES - BASE PAY ZONE 2: 30 TO 60 MILES - BASE PAY + $3.50 ZONE 3: OVER 60 MILES - BASE PAY + $5.50.....$ 23.47 10.40

IRON0014-017 01/01/2024

	Rates	Fringes
IRONWORKER: REINFORCING AND STRUCTURAL (GLACIER COUNTY).....	$ 32.08	29.06

IRON0732-019 06/01/2024

	Rates	Fringes
IRONWORKER: REINFORCING AND STRUCTURAL (BLAINE, CHOUTEAU, FERGUS, GOLDEN VALLEY, HILL, JUDITH BASIN, LIBERTY, MUSSELSHELL, PETROLEUM, PONDERA, SWEET GRASS, TETON, AND WHEATLAND COUNTIES).....	$ 36.83	25.30

SUMT2011-053 02/08/2011

	Rates	Fringes
OPERATOR: LOADER (FRONT END).....	$ 25.01	7.78
OPERATOR: GRADER/BLADE.....	$ 25.44	8.45
OPERATOR: BOBCAT/SKID STEER/SKID LOADER.....	$ 23.53	8.05
OPERATOR: BACKHOE.....	$ 25.71	8.05
LABORER: LANDSCAPE AND IRRIGATION.....	$ 15.14	1.30
LABORER: PIPELAYER.....	$ 18.13	5.90
LABORER: COMMON OR GENERAL.....	$ 17.99	5.90
CARPENTER, EXCLUDES FORM WORK.....	$ 21.13	7.00
CARPENTER (FORM WORK ONLY).....	$ 24.30	7.80

TEAM0190-002 05/01/2025

	Rates	Fringes
TRUCK DRIVER (3) DUMP TRUCK ZONE A ZONE B (30-60 MILES FROM COUNTY COURTHOUSE OF LISTED CITIES*): ADD $3.05 PER HOUR TO ZONE A RATES ZONE C (OVER 60 MILES FROM COUNTY COURTHOUSE OF LISTED CITIES*): ADD $4.85 PER HOUR TO ZONE A RATES. *ZONE PAY WILL BE CALCULATED FROM THE CITY CENTER OF THE FOLLOWING LISTED CITIES: BILLINGS BOZEMAN BUTTE GREAT FALLS HELENA KALISPELL MISSOULA.....	$ 45.28	13.40
TRUCK DRIVER (2) DUMP TRUCK ZONE A ZONE B (30-60 MILES FROM COUNTY COURTHOUSE OF LISTED CITIES*): ADD $3.05 PER HOUR TO ZONE A RATES ZONE C (OVER 60 MILES FROM COUNTY COURTHOUSE OF LISTED CITIES*): ADD $4.85 PER HOUR TO ZONE A RATES. *ZONE PAY WILL BE CALCULATED FROM THE CITY CENTER OF THE FOLLOWING LISTED CITIES: BILLINGS BOZEMAN BUTTE GREAT FALLS HELENA KALISPELL MISSOULA	$ 45.28	13.40

WELDERS - Receive rate prescribed for craft performing operation to which welding is incidental.

==========

Note: Executive Order (EO) 13706, Establishing Paid Sick Leave for Federal Contractors applies to all contracts subject to the Davis-Bacon Act for which the contract is awarded (and any solicitation was issued) on or after January 1, 2017. If this

contract is covered by the EO, the contractor must provide employees with 1 hour of paid sick leave for every 30 hours they work, up to 56 hours of paid sick leave each year. Employees must be permitted to use paid sick leave for their own illness, injury or other health-related needs, including preventive care; to assist a family member (or person who is like family to the employee) who is ill, injured, or has other health-related needs, including preventive care; or for reasons resulting from, or to assist a family member (or person who is like family to the employee) who is a victim of, domestic violence, sexual assault, or stalking. Additional information on contractor requirements and worker protections under the EO is available at https://www.dol.gov/agencies/whd/government-contracts.

Note: Executive Order 13658 generally applies to contracts subject to the Davis-Bacon Act that were awarded on or between January 1, 2015 and January 29, 2022, and that have not been renewed or extended on or after January 30, 2022. Executive Order 13658 does not apply to contracts subject only to the Davis-Bacon Related Acts regardless of when they were awarded. If a contract is subject to Executive Order 13658, the contractor must pay all covered workers at least $13.65 per hour (or the applicable wage rate listed on this wage determination, if it is higher) for all hours spent performing on the contract from May 11, 2026, through December 31, 2026. The applicable Executive Order minimum wage rate will be adjusted annually. Additional information on contractor requirements and worker protections under Executive Order 13658 is available at www.dol.gov/whd/govcontracts.

Unlisted classifications needed for work not included within the scope of the classifications listed may be added after award only as provided in the labor standards contract clauses (29CFR 5.5 (a) (1) (iii)).

The body of each wage determination lists the classifications and wage rates that have been found to be prevailing for the type(s) of construction and geographic area covered by the wage determination. The classifications are listed in alphabetical order under rate identifiers indicating whether the particular rate is a union rate (current union negotiated rate), a survey rate, a weighted union average rate, a state adopted rate, or a supplemental classification rate.

Union Rate Identifiers

A four-letter identifier beginning with characters other than ⍰SU⍰, ⍰UAVG⍰, ⍰SA⍰, or ⍰SC⍰ denotes that a union rate was prevailing for that classification in the survey. Example: PLUM0198-005 07/01/2024. PLUM is an identifier of the union whose collectively bargained rate prevailed in the survey for this classification, which in this example would be Plumbers. 0198 indicates the local union number or district council number where applicable, i.e., Plumbers Local 0198. The next number, 005 in the example, is an internal number used in processing the wage determination. The date, 07/01/2024 in the example, is the effective date of the most current negotiated rate.

Union prevailing wage rates are updated to reflect all changes over time that are reported to WHD in the rates in the collective bargaining agreement (CBA) governing the classification.

Union Average Rate Identifiers

The UAVG identifier indicates that no single rate prevailed for those classifications, but that 100% of the data reported for the classifications reflected union rates. EXAMPLE: UAVG-OH-0010 01/01/2024. UAVG indicates that the rate is a weighted union average rate. OH indicates the State of Ohio. The next number, 0010 in the example, is an internal number used in producing the wage determination. The date, 01/01/2024 in the example, indicates the date the wage determination was updated to reflect the most current union average rate.

A UAVG rate will be updated once a year, usually in January, to reflect a weighted average of the current rates in the collective bargaining agreements on which the rate is based.

Survey Rate Identifiers

The ⿰SU⿰ identifier indicates that either a single non-union rate prevailed (as defined in 29 CFR 1.2) for this classification in the survey or that the rate was derived by computing a weighted average rate based on all the rates reported in the survey for that classification. As a weighted average rate includes all rates reported in the survey, it may include both union and non-union rates. Example: SUFL2022-007 6/27/2024. SU indicates the rate is a single non-union prevailing rate or a weighted average of survey data for that classification. FL indicates the State of Florida. 2022 is the year of the survey on which these classifications and rates are based. The next number, 007 in the example, is an internal number used in producing the wage determination. The date, 6/27/2024 in the example, indicates the survey completion date for the classifications and rates under that identifier.

⿰SU⿰ wage rates typically remain in effect until a new survey is conducted. However, the Wage and Hour Division (WHD) has the discretion to update such rates under 29 CFR 1.6(c)(1).

State Adopted Rate Identifiers

The ⿰SA⿰ identifier indicates that the classifications and prevailing wage rates set by a state (or local) government were adopted under 29 C.F.R 1.3(g)-(h). Example: SAME2023-007 01/03/2024. SA reflects that the rates are state adopted. ME refers to the State of Maine. 2023 is the year during which the state completed the survey on which the listed classifications and rates are based. The next number, 007 in the example, is an internal number used in producing the wage determination. The date, 01/03/2024 in the example, reflects the date on which the classifications and rates under the ⿰SA⿰ identifier took effect under state law in the state from which the rates were adopted.

WAGE DETERMINATION APPEALS PROCESS

1) Has there been an initial decision in the matter? This can be:

a) a survey underlying a wage determination
b) an existing published wage determination
c) an initial WHD letter setting forth a position on a wage determination matter
d) an initial conformance (additional classification and rate) determination

On survey related matters, initial contact, including requests for summaries of surveys, should be directed to the WHD Branch of Wage Surveys. Requests can be submitted via email to davisbaconinfo@dol.gov or by mail to:

Branch of Wage Surveys
Wage and Hour Division
U.S. Department of Labor
200 Constitution Avenue, N.W.
Washington, DC 20210

Regarding any other wage determination matter such as conformance decisions, requests for initial decisions should be directed to the WHD Branch of Construction Wage Determinations. Requests can be submitted via email to BCWD-Office@dol.gov or by mail to:

Branch of Construction Wage Determinations
Wage and Hour Division
U.S. Department of Labor
200 Constitution Avenue, N.W.
Washington, DC 20210

2) If an initial decision has been issued, then any interested party (those affected by the action) that disagrees with the decision can request review and reconsideration from the Wage and Hour Administrator (See 29 CFR Part 1.8 and 29 CFR Part 7). Requests for review and reconsideration can be submitted via email to dba.reconsideration@dol.gov or by mail to:

Wage and Hour Administrator
U.S. Department of Labor
200 Constitution Avenue, N.W.
Washington, DC 20210

The request should be accompanied by a full statement of the interested party's position and any information (wage payment data, project description, area practice material, etc.) that the requestor considers relevant to the issue.

3) If the decision of the Administrator is not favorable, an interested party may appeal directly to the Administrative Review Board (formerly the Wage Appeals Board). Write to:

Administrative Review Board
U.S. Department of Labor
200 Constitution Avenue, N.W.
Washington, DC 20210.

==========

END OF GENERAL DECISION

"

Provisions

52.252-1 Solicitation Provisions Incorporated by Reference (Feb 1998)

This solicitation incorporates one or more solicitation provisions by reference, with the same force and effect as if they were given in full text. Upon request, the Contracting Officer will make their full text available. The offeror is cautioned that the listed provisions may include blocks that must be completed by the offeror and submitted with its quotation or offer. In lieu of submitting the full text of those provisions, the offeror may identify the provision by paragraph identifier and provide the appropriate information with its quotation or offer. Also, the full text of a solicitation provision may be accessed electronically at this/these address(es):

(1) Federal Acquisition Regulation (FAR): https://www.acquisition.gov/far/part-52

(2) Revolutionary FAR Overhaul (RFO): https://www.acquisition.gov/far-overhaul/far-part-deviation-guide/far-overhaul-part-52

The following provisions are incorporated by reference:

52.204-7 System for Award Management – Registration (RFO DEVIATION Mar 2026)

52.215-1 Instructions to Offerors – Competitive Acquisition (Nov 2021)

52.222-5 Construction Wage Rate Requirements – Secondary Site of the Work (RFO DEVIATION May 2026)

52.225-20 Prohibition on Conducting Restricted Business Operations in Sudan – Certification (Aug 2009)

52.225-25 Prohibition on Contracting with Entities Engaging in Certain Activities or Transactions Relating to Iran – Representation and Certifications (Jun 2020)

52.240-90 Security Prohibitions and Exclusions Representations and Certifications (RFO DEVIATION Mar 2026)

(End of Provisions Incorporated by Reference)

52.209-2 Prohibition on Contracting with Inverted Domestic Corporations – Representations (RFO DEVIATION May 2026)

(a) *Definitions*. As used in this clause—

Inverted domestic corporation means a foreign incorporated entity that meets the definition of an inverted domestic corporation under 6 U.S.C. 395(b), applied in accordance with the rules and definitions of 6 U.S.C. 395(c).

Subsidiary means an entity in which more than 50 percent of the entity is owned—

(1) Directly by a parent corporation; or

(2) Through another subsidiary of a parent corporation.

(b) Government agencies are not permitted to use appropriated (or otherwise made available) funds for contracts with either an inverted domestic corporation, or a subsidiary of an inverted domestic corporation, unless the exception at 9.108-3(b) applies or the requirement is waived in accordance with the procedures at 9.108-5.

(c) Representation. The Offeror represents that-

(1) It ☐ is, ☐ is not an inverted domestic corporation; and

(2) It ☐ is, ☐ is not a subsidiary of an inverted domestic corporation.

(End of Provision)

52.209-11 Representation by Corporations Regarding Delinquent Tax Liability or a Felony Conviction under any Federal Law (RFO DEVIATION May 2026)

(a) The Government will not enter into a contract with any corporation that—

(1) Has any unpaid Federal tax liability that has been assessed, for which all judicial and administrative remedies have been exhausted or have lapsed, and that is not being paid in a timely manner pursuant to an agreement with the authority responsible for collecting the tax liability, where the awarding agency is aware of the unpaid tax liability, unless an agency has considered suspension or debarment of the corporation and made a determination that suspension or debarment is not necessary to protect the interests of the Government; or

(2) Was convicted of a felony criminal violation under any Federal law within the preceding 24 months, where the awarding agency is aware of the conviction, unless an agency has considered suspension or debarment of the corporation and made a determination that this action is not necessary to protect the interests of the Government.

(b) The Offeror represents that–

(1) It is ☐ is not ☐ a corporation that has any unpaid Federal tax liability that has been assessed, for which all judicial and administrative remedies have been exhausted or have lapsed, and that is not being paid in a timely manner pursuant to an agreement with the authority responsible for collecting the tax liability; and

(2) It is ☐ is not ☐ a corporation that was convicted of a felony criminal violation under a Federal law within the preceding 24 months.

(End of provision)

52.216-1 Type of Contract (Apr 1984)

The Government contemplates award of a **Firm-Fixed Price (FFP)** contract resulting from this solicitation.

(End of Provision)

52.219-1 Small Business Program Representations (RFO DEVIATION Jan 2026)

(a) Definitions. As used in this provision-

Economically disadvantaged women-owned small business (EDWOSB) concern means a small business concern that is at least 51 percent directly and unconditionally owned by, and the management and daily business operations of which are controlled by, one or more women who are citizens of the United States and who are economically disadvantaged in accordance with 13 CFR part 127, and the concern is certified by SBA or an approved third-party certifier in accordance with 13 CFR 127.300. It automatically qualifies as a women-owned small business concern eligible under the WOSB Program.

HUBZone small business concern means a small business concern that meets the requirements described in 13 CFR 126.200, is certified by the Small Business Administration (SBA) and designated by SBA as a HUBZone small business concern in the Small Business Search (SBS) (13 CFR 126.103).

Service-disabled veteran-owned small business (SDVOSB) concern eligible under the SDVOSB Program means an SDVOSB concern that is designated in the System for Award Management (SAM) as certified by the Small Business Administration (SBA) in accordance with 13 CFR 128.300.

Small business concern—

(1) Means a concern, including its affiliates, that is independently owned and operated, not dominant in its field of operation, and qualified as a small business under the criteria in 13 CFR part 121 and the size standard in paragraph (b) of this provision.

(2) Affiliates, as used in this definition, means business concerns, one of whom directly or indirectly controls or has the power to control the others, or a third party or parties control or have the power to control the others. In determining whether affiliation exists, consideration is given to all appropriate factors including common ownership, common management, and contractual relationships. SBA determines affiliation based on the factors set forth at 13 CFR 121.103.

Small disadvantaged business concern means a small business concern that-

(1) Is at least 51 percent unconditionally and directly owned (as defined at 13 CFR 124.105) by one or more socially disadvantaged (as defined at 13 CFR 124.103) and economically disadvantaged (as defined at 13 CFR 124.104) individuals who are citizens of the United States, and

(2) The management and daily business operations of which are controlled (as defined at 13 CFR 124.106) by individuals who meet the criteria in paragraph (1) of this definition.

Women-owned small business (WOSB) concern eligible under the WOSB Program (in accordance with 13 CFR part 127) means a small business concern that is at least 51 percent directly and unconditionally owned by, and the management and daily business operations of which are controlled by, one or more women who are citizens of the United States, and the concern is certified by SBA or an approved third-party certifier in accordance with 13 CFR 127.300.

(b)

(1) The North American Industry Classification System (NAICS) code for this acquisition is **237990 – Other Heavy and Civil Engineering Construction**.

(2) The small business size standard is **$45 Million**.

(3) The small business size standard for a concern that submits an offer, other than on a construction or service acquisition, but proposes to furnish an end item that it did not itself manufacture, process, or produce (i.e., nonmanufacturer), is 500 employees, or 150 employees for information technology value-added resellers under NAICS code 541519, if the acquisition—

(i) Is set aside for small business and has a value above the simplified acquisition threshold;

(ii) Uses the HUBZone price evaluation preference regardless of dollar value, unless the offeror waives the price evaluation preference; or

(iii) Is an 8(a), HUBZone, service-disabled veteran-owned, economically disadvantaged women-owned, or women-owned small business set-aside or sole-source award regardless of dollar value.

(c) *Representations*.

(1) The offeror represents as part of its offer that—

(i) it ☐ is, ☐ is not a small business concern; or

(ii) It ☐ is, ☐ is not a small business joint venture that complies with the requirements of 13 CFR 121.103(h) and 13 CFR 125.8(a) and (b). [*The offeror shall enter the name and unique entity identifier of each party to the joint venture:* _____.]

(2) [*Complete only if the offeror represented itself as a small business concern in paragraph (c)(1) of this provision.*] The offeror represents that it ☐ is, ☐ is not a women-owned small disadvantage business concern.

(3) *Women-owned small business (WOSB) joint venture eligible under the WOSB Program*. The offeror represents as part of its offer that it ☐ is, ☐ is not a joint venture that complies with the requirements of 13 CFR 127.506(a) through (c). [*The offeror shall enter the name and unique entity identifier of each party to the joint venture:* _____.]

(4) *Economically disadvantaged women-owned small business (EDWOSB) joint venture*. The offeror represents as part of its offer that it ☐ is, ☐ is not a joint venture that complies with the requirements of 13 CFR 127.506(a) through (c). [*The offeror shall enter the name and unique entity identifier of each party to the joint venture:* _____.]

(5) *SDVOSB joint venture eligible under the SDVOSB Program*. [*Complete only if the offeror is certified as a SDVOSB concern*]. The offeror represents as part of its offer that it ☐ is, ☐ is not a SDVOSB joint venture eligible under the SDVOSB Program that complies with the requirements of 13 CFR 128.402. [*The offeror shall enter the name and unique entity identifier of each party to the joint venture:*_____.]

(6) *HUBZone joint venture eligible under the HUBZone Program*. [*Complete only if the offeror is a HUBZone small business concern.*] The offeror represents, as part of its offer, that it ☐ is, ☐ is not a HUBZone joint venture that complies with the requirements of 13 CFR 126.616(a) through (c). [*The offeror shall enter the name and unique entity identifier of each party to the joint venture:* _____.] Each HUBZone small business concern participating in the HUBZone joint venture must be certified as a HUBZone concern.

(d) *Notice*. Under 15 U.S.C. 645(d), any person who misrepresents a firm's status as a business concern that is small, HUBZone small, small disadvantaged, service-disabled veteran-owned small, economically disadvantaged women-owned small, or women-owned small eligible under the WOSB Program in order to obtain a contract to be awarded under the preference programs established pursuant to section 8, 9, 15, 31, and 36 of the Small Business Act or any other provision of Federal law that specifically references section 8(d) for a definition of program eligibility, will be—

(1) Punished by imposition of fine, imprisonment, or both;

(2) Subject to administrative remedies, including suspension and debarment; and

(3) Ineligible for participation in programs conducted under the authority of the Act.

(End of Provision)

52.225-10 Notice of Buy American Requirement – Construction Materials (May 2014)

(a) *Definitions*. "Commercially available off-the-shelf (COTS) item," "construction material," "domestic construction material," and "foreign construction material," as used in this provision, are defined in the clause of this solicitation entitled "Buy American-Construction Materials" (Federal Acquisition Regulation (FAR) clause 52.225-9).

(b) *Requests for determinations of inapplicability*. An offeror requesting a determination regarding the inapplicability of the Buy American statute should submit the request to the Contracting Officer in time to allow a determination before submission of offers. The offeror shall include the information and applicable supporting data required by paragraphs (c) and (d) of the clause at FAR 52.225-9 in the request. If an offeror has not requested a determination regarding the inapplicability of the Buy American statute before submitting its offer, or has not received a response to a previous request, the offeror shall include the information and supporting data in the offer.

(c) *Evaluation of offers*.

(1) The Government will evaluate an offer requesting exception to the requirements of the Buy American statute, based on claimed unreasonable cost of domestic construction material, by adding to the offered price the appropriate percentage of the cost of such foreign construction material, as specified in paragraph (b)(3)(i) of the clause at FAR 52.225-9.

(2) If evaluation results in a tie between an offeror that requested the substitution of foreign construction material based on unreasonable cost and an offeror that did not request an exception, the Contracting Officer will award to the offeror that did not request an exception based on unreasonable cost.

(d) *Alternate offers*.

(1) When an offer includes foreign construction material not listed by the Government in this solicitation in paragraph (b)(2) of the clause at FAR 52.225-9, the offeror also may submit an alternate offer based on use of equivalent domestic construction material.

(2) If an alternate offer is submitted, the offeror shall submit a separate Standard Form 1442 for the alternate offer, and a separate price comparison table prepared in accordance with paragraphs (c) and (d) of the clause at FAR 52.225-9 for the offer that is based on the use of any foreign construction material for which the Government has not yet determined an exception applies.

(3) If the Government determines that a particular exception requested in accordance with paragraph (c) of the clause at FAR 52.225-9 does not apply, the Government will evaluate only those offers based on use of the equivalent domestic construction material, and the offeror shall be required to furnish such domestic construction material. An offer based on use of the foreign construction material for which an exception was requested-

(i) Will be rejected as nonresponsive if this acquisition is conducted by sealed bidding; or

(ii) May be accepted if revised during negotiations.

(End of Provision)

52.252-5 Authorized Deviations in Provisions (Nov 2020)

(a) The use in this solicitation of any Federal Acquisition Regulation (FAR) (48 CFR Chapter 1) provision with an authorized deviation is indicated by the addition of "(DEVIATION)" after the date of the provision.

(b) The use in this solicitation of any Department of the Interior Acquisition Regulation (DIAR) (48 CFR Chapter 14) provision with an authorized deviation is indicated by the addition of "(DEVIATION)" after the name of the regulation.

(End of Provision)

1452.215-71 Use and Disclosure of Proposal Information – Department of the Interior (APR 1984)

(a) Definitions. For the purposes of this provision and the Freedom of Information Act (5 U.S.C. 552), the following terms shall have the meaning set forth below:

(1) "Trade Secret" means an unpatented, secret, commercially valuable plan, appliance, formula, or process, which is used for making, preparing, compounding, treating or processing articles or materials which are trade commodities.

(2) "Confidential commercial or financial information" means any business information (other than trade secrets) which is exempt from the mandatory disclosure requirement of the Freedom of Information Act, 5 U.S.C. 552. Exemptions from mandatory disclosure which may be applicable to business information contained in proposals include exemption (4), which covers "commercial and financial information obtained from a person and privileged or confidential," and exemption (9), which covers "geological and geophysical information, including maps, concerning wells."

(b) If the offeror, or its subcontractor(s), believes that the proposal contains trade secrets or confidential commercial or financial information exempt from disclosure under the Freedom of Information Act, (5 U.S.C. 552), the cover page of each copy of the proposal shall be marked with the following legend: "The information specifically identified on pages _____ of this proposal constitutes trade secrets or confidential commercial and financial information which the offeror believes to be exempt from disclosure under the Freedom of Information Act. The offeror requests that this information not be disclosed to the public, except as may be required by law. The offeror also requests that this information not be used in whole or part by the government for any purpose other than to evaluate the proposal, except that if a contract is awarded to the offeror as a result of or in connection with the submission of the proposal, the Government shall have the right to use the information to the extent provided in the contract."

(c) The offeror shall also specifically identify trade secret information and confidential commercial and financial information on the pages of the proposal on which it appears and shall mark each such page with the following legend:

"This page contains trade secrets or confidential commercial and financial information which the offeror believes to be exempt from disclosure under the Freedom of Information Act and which is subject to the legend contained on the cover page of this proposal."

(d) Information in a proposal identified by an offeror as trade secret information or confidential commercial and financial information shall be used by the Government only for the purpose of evaluating the proposal, except that (i) if a contract is awarded to the offeror as a result of or in connection with submission of the proposal, the Government shall have the right to use the information as provided in the contract, and (ii) if the same information is obtained from another source without restriction it may be used without restriction.

(e) If a request under the Freedom of Information Act seeks access to information in a proposal identified as trade secret information or confidential commercial and financial information, full consideration will be given to the offeror's view that the information constitutes trade secrets or confidential commercial or financial information. The offeror will also be promptly notified of the request and given an opportunity to provide additional evidence and argument in support of its position, unless administratively unfeasible to do so. If it is determined that information claimed by the offeror to be trade secret information or confidential commercial or financial information is not exempt from disclosure under the Freedom of Information Act, the offeror will be notified of this determination prior to disclosure of the information.

(f) The Government assumes no liability for the disclosure or use of information contained in a proposal if not marked in accordance with paragraphs (b) and (c) of this provision. If a request under the Freedom of Information Act is made for information in a proposal not marked in accordance with paragraphs (b) and (c) of this provision, the offeror concerned shall be promptly notified of the request and given an opportunity to provide its position to the Government. However, failure of an offeror to mark information contained in a proposal as trade secret information or confidential commercial or financial information will be treated by the Government as evidence that the information is not exempt from disclosure under the Freedom of Information Act, absent a showing that the failure to mark was due to unusual or extenuating circumstances, such as a showing that the offeror had intended to mark, but that markings were omitted from the offeror's proposal due to clerical error.

(End of Provision)

WBR 1452.215-81 Proposal Instructions – Bureau of Reclamation (Mar 2021)

This procurement will be conducted in accordance with FAR Part 15.

In addition to the requirements of the Instructions to Offerors - Competitive Acquisitions provision of this solicitation (see FAR 52.215-1), each offeror shall submit a proposal in accordance with the instructions contained in this provision.

(a) Use and Disclosure of Proposal Information. In accordance with the Use and Disclosure of Proposal Information – Department of the Interior provision of this solicitation (see DIAR 1452.215-71), offerors shall mark trade-secret or confidential commercial or financial information contained in the proposal with the restrictive legends specified. The offeror shall also clearly and separately mark all proprietary information (as defined in FAR 3.104-3) contained in the proposal with the restrictive legend "Proprietary Information."

(b) Proposal Volumes. Offerors shall submit separate Volumes with the required number of copies as follows:

Volume	Title	Copies Required
I	Business Proposal (Representations, Certifications and Offer)	1 Electronic copy to sydney_oakes@ios.doi.gov and charlene_maurer@ios.doi.gov
II	Technical Proposal and Past Performance	
III	Pricing Proposal	

(1) Separation of volumes. Each proposal Volume (i.e., all copies of Volume I) are to be packaged individually and clearly marked to identify contents. The exterior of each package containing proposals shall be marked with the solicitation number and the name and address of the offeror, in order to prevent mishandling.

(c) General Contents. Each separate proposal Volume shall:

(1) Be presented in a manner which allows it to “stand alone” without the need to reference other documents;

(2) Be a coherent document free of internal inconsistencies as well as inconsistencies with other volumes of the proposal;

(3) Conform to all solicitation provisions, clauses, or requirements;

(4) Address the submission requirements with specificity and detail where required;

(5) Be an orderly, specific, and complete document in every detail;

(6) Be logically presented, using clear and concise language so that it can be easily read and meaningfully evaluated by Reclamation personnel from a variety of different functional and technical disciplines; and

(7) Indicate how the proposal conforms to the evaluation criteria identified in provision WBR 1452.215-85 below.

(e) Volume I, Business Proposal. Volume I shall incorporate the other Volumes by reference but shall not physically include them. It shall consist of:

(1) A fully executed Standard Form 1442 – Solicitation, Offer, and Award form required this solicitation. It shall be used as the cover sheet (or first page) of Volume I.

(2) Fully executed and completed offeror representations, certifications, and acknowledgments required by the provisions of this solicitation;

(3) Additional information required by the solicitation to be furnished by the offeror which is not required to be obtained in another volume of the proposal;

(4) Make-or-buy program (if applicable);

(5) Requests for any waivers of any solicitation provisions or contract clauses; and

(6) A summary of any exemptions from, or deviations to, any other solicitation requirements.

(f) Volume II

(1) Technical Proposal. The technical proposal should convincingly describe the capability of the offeror's organization to participate in this project and effectively demonstrate a thorough understanding of the work statement contained in the Statement of Work (SOW) of this solicitation. To assist in the uniform evaluation of proposals, the following format shall be utilized in preparing the technical proposal:

(a) Factors. The Offeror shall submit concise, complete technical narratives for the factors below. Each factor is evaluated on an acceptable/unacceptable (pass/fail) basis. Failure to address any required element under a factor will result in Unacceptable for that factor and the overall proposal.

Note: The Government will evaluate technical acceptability only; no tradeoffs will be made among non-price factors (LPTA).

Factor 1 – Removal & Disposal of Gantry Crane Plan

Provide a detailed removal and disposal of gantry crane plan describing:

1. The gantry crane setup location(s) on the spillway or adjacent decks and the exact setup position of the mobile crane(s) to perform all lifts used for dismantling and removal.

2. Clearly specify method of dismantling, including whether the gantry crane will be removed as one piece or in multiple sections. If removed in multiple sections, describe how each segment (bridge, frame, hoist, rails, support beams/columns) will be removed and the sequence of lifts in accordance with the SOW requirement to removal "all crane components" with minimal concrete damage.

3. Include how the remaining portions of the gantry crane will be supported during partial dismantling, including temporary bracing, shorting, or engineered lift points needed to maintain stability.

4. List of proposed equipment (crane type/capacity, rigging, cutting tools) consistent with performing the full removal scope.

5. Confirmation the plan removes all crane components and minimizes concrete damage (e.g., removal techniques that avoid spalling and over-break).

6. Method to load, haul, and legally dispose of all removed materials offsite, noting any intended salvage. Include identification of permitted facilities or legal pathways for disposal consistent with local/state requirements.

Factor 2 – Stoplog Installation & Removal Plan

Provide a detailed stoplog installation and removal plan describing:

1. Sequence for installing Government-furnished stoplogs in each of the three spillway gate bays and removing them after testing.

2. Equipment/rigging approach compatible with the bay geometry and safe handling of stoplogs.

3. A bay-by-bay schedule reflecting stoplogs remaining in place for one (1) day per gate to support Government operational testing.

4. Coordination approach with Government forces for gate testing windows and access controls.

(2) Past Performance. Provide a list of no more than three (3) projects similar in scope and complexity to the work required under this solicitation which the offeror has completed during the past 10 years. For each project, include:

(a) Name of the project;

(b) Description of the work;

(c) Contract number, date, and type;

(d) Point of contact information must include the name, address and phone number(s) of the acquiring Government agency or commercial customer;

(e) Initial and final contract amounts; and

(f) Any problems encountered in performance of the work and documented corrective action(s) taken; and

(g) State if the project involved removal of similar equipment as applicable to this solicitation; and

(h) Name(s) and telephone number(s) of references from the acquiring agency or customer who may be contacted for further information.

(g) Volume III, Price Proposal. Offerors are hereby notified that even though cost or pricing data are not initially requested in this solicitation, the Contracting Officer reserves the right to request such data if they are later found necessary pursuant to FAR 15.403-5(a)(1).

To assist in the uniform evaluation of proposals, the following format shall be utilized in preparing the pricing proposal:

(1) The price proposal should be consistent with the technical approach(es) proposed in the technical proposal, Volume II;

(2) Pricing proposal breakdown. The offeror shall complete and submit the Price Schedule table contained at the beginning of this solicitation, with its proposed total prices/costs for each contract line item number (CLIN), including any options, and proposed unit price(s), if required. In addition, a total proposed price consisting of the sum of all CLINs shall be submitted.

Offerors are hereby notified that even though additional data to support proposed prices are not initially requested in this solicitation, the Contracting Officer reserves the right to request such data if they are later found necessary.

(3) No cost information shall be included in Volume II;

(End of Provision)

WBR 1452.215-85 Evaluation Factors for Award – Lowest Price Technically Acceptable Source Selection Process – Bureau of Reclamation (Mar 2021)

(a) Award will be made to the responsible offeror submitting the lowest evaluated price of proposals meeting or exceeding the acceptability standards for non-cost/price factors and any significant subfactors listed in this provision.

(b) Proposals shall be evaluated for acceptability, but not ranked, using the non-cost/price factors listed below. There shall be no trade-offs. Past performance shall be evaluated in accordance with FAR 15.305; however there shall be no comparative assessment of offerors' past performance. If the Contracting Officer determines that a small business' past performance is not acceptable, the matter shall be referred to the Small Business Administration for a Certificate of Competency determination, in accordance with the procedures contained in FAR Subpart 19.6 and 15 U.S.C. 637(b)(7). If a proposal is determined by the Contracting Officer to be "technically unacceptable" as a result of evaluating all factors other than cost or price, the proposal may be rejected from further consideration.

(c) Pursuant to FAR 15.305(a)(1), a cost or price analysis will be performed to determine price reasonableness and any instances of unbalanced pricing, using one or more of the techniques at FAR 15.404 -1.

(d) The following factors, significant subfactors (if listed), and acceptability standards for non-cost/price factors/subfactors shall be considered in evaluating proposals and making the source selection:

Factor 1 – Removal & Disposal of Gantry Crane Plan

The Government will evaluate if the Offeror's removal and disposal of gantry crane plan provides concise, complete technical narratives for Items 1 through 6 listed in Factor 1 under provision WBR 1452.215-81.

Acceptable (Pass): The Offeror's proposal meets all 6 required elements listed under Factor 1 and demonstrates the SOW's minimum requirements for performance. No material deficiencies are present.

Unacceptable (Fail): The Offeror's proposal omits one or more of the 6 required elements or proposes methods inconsistent with the SOW's minimum requirements (e.g., incomplete removal scope, lack of concrete protection, lack of disposal).

Factor 2 – Stoplog Installation & Removal Plan

The Government will evaluate if the Offeror's stoplog installation and removal plan provides concise, complete technical narratives for Items 1 through 4 listed in Factor 2 under provision WBR 1452.215-81.

Acceptable (Pass): The Offeror's proposal meets all 4 required elements listed under Factor 2 and demonstrates the SOW's minimum requirements for performance. No material deficiencies are present.

Unacceptable (Fail): The Offeror's proposal omits one or more of the 4 required elements or proposes methods inconsistent with the SOW's minimum requirements (e.g., time after installation is insufficient for Government testing [less than one day] or schedules Government testing during a non-work day).

Evaluation Factors Acceptability Standards: Award will be made to the responsible offeror submitting the lowest evaluated price of proposals meeting or exceeding the acceptability standards for non-cost/price factors listed in this provision. If one or more non-price/cost factor is Unacceptable, the overall proposal is Unacceptable and will not be considered for award.

(End of Provision)

WBR 1452.236-85 Instruction for Mobilization and Preparatory Work Schedule Line Item – Bureau of Reclamation (Mar 2022)

The contracting officer estimates that the Section B (Price Schedule) Mobilization and Preparatory Work schedule line item should not exceed **10** percent of the total bid price. Your attention is directed to contract clause WBR 1452.232-81 Payment for Mobilization and Preparatory Work, which reflects how the Government will pay for this line item, including how payment will be made when the price bid for this schedule line item is higher than the percentage stated herein.

(End of Provision)