UNITED STATES DEPARTMENT OF THE INTERIOR
BUREAU OF LAND MANAGEMENT
NATIONAL INTERAGENCY FIRE CENTER

NIFC 410A-ITS LIGHTING REPLACE

BOISE, IDAHO

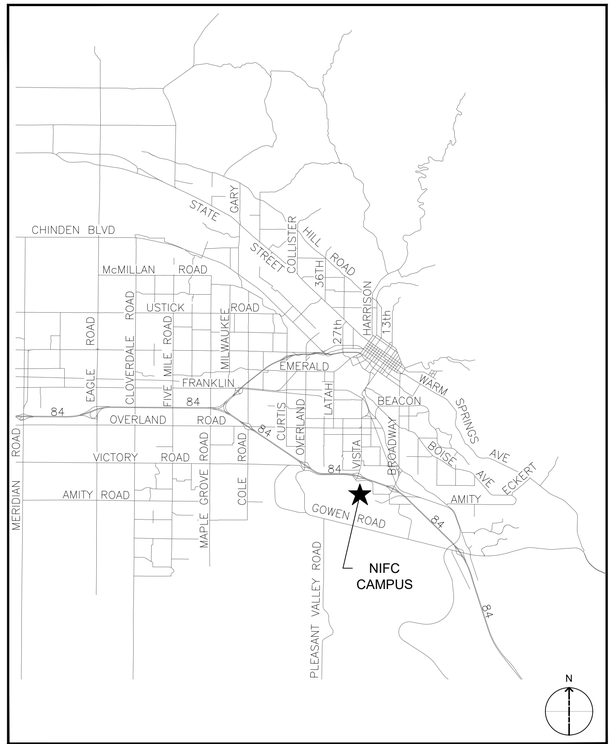

REFERENCE MAP

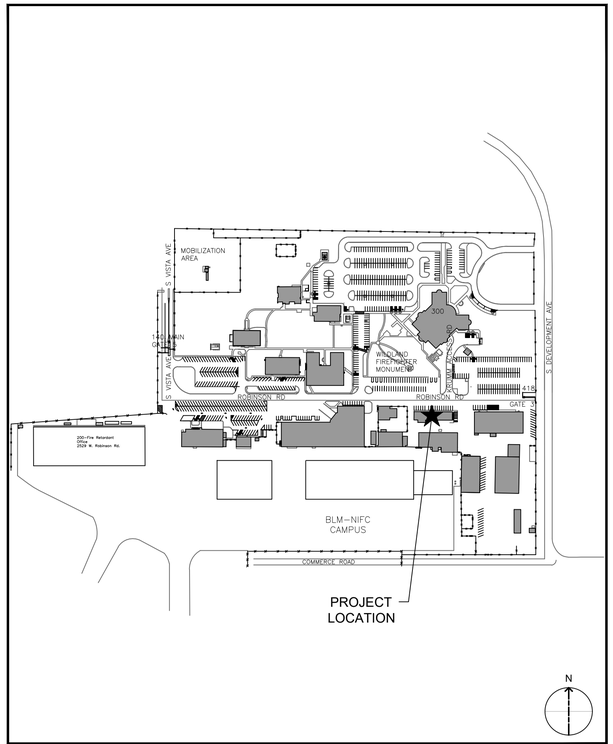

VICINITY MAP

NATIONAL INTERAGENCY FIRE CENTER
3833 DEVELOPMENT AVE, BOISE, ID 83705

PROJECT LOCATION
LATITUDE: 43.565965°
LONGITUDE: -116.209218°

DRAWING INDEX

SHEET	SUB SHEET	TITLE OF SHEET
GENERAL		
1	G-001	COVER SHEET
2	G-100	CODE REVIEW
3	G-101	ACCESSIBILITY DIAGRAMS
ARCHITECTURAL		
4	AD101	FIRST FLOOR DEMOLITION PLAN
5	AD102	FIRST FLOOR DEMOLITION REFLECTED CEILING PLAN
6	AE001	ASSEMBLIES
7	AE101	FIRST FLOOR PLAN
8	AE102	FIRST FLOOR REFLECTED CEILING PLAN
9	AE501	DOOR AND WINDOW DETAILS
10	AE601	DOOR AND WINDOW SCHEDULE AND ELEVATIONS
INTERIORS		
11	IN101	FIRST FLOOR FINISH PLAN
12	IN102	FIRST FLOOR SIGNAGE PLAN
PLUMBING		
13	P-001	PLUMBING LEGEND, NOTES, AND ABBREVIATIONS
14	PD101	FIRST FLOOR DEMOLITION PLUMBING PLAN
15	P-101	FIRST FLOOR PLUMBING PLAN
MECHANICAL		
16	M-001	MECHANICAL LEGEND, NOTES AND ABBREVIATIONS
17	MD101	FIRST FLOOR DEMOLITION MECHANICAL PLAN
18	M-101	FIRST FLOOR MECHANICAL PLAN
19	M-501	MECHANICAL DETAILS
ELECTRICAL		
20	E-001	ELECTRICAL LEGEND, NOTES, AND ABBREVIATIONS
21	ED101	FIRST FLOOR DEMOLITION ELECTRICAL PLANS
22	E-101	FIRST FLOOR ELECTRICAL PLANS
23	E-102	FIRST FLOOR LIGHTING PLAN
24	E-501	ELECTRICAL DETAILS
25	E-601	ELECTRICAL SCHEDULES
26	E-602	ELECTRICAL SCHEDULES
27	E-701	ELECTRICAL ONE-LINE DIAGRAM
28	E-702	PHOTOMETRIC PLAN

DESIGNERS

LBYD FEDERAL
Cushing Terrell.

ALWAYS THINK SAFETY

NIFC 410A-ITS LIGHTING REPLACE
NATIONAL INTERAGENCY FIRE CENTER
United States Department of the Interior Bureau of Land Management
3833 DEVELOPMENT AVE, BOISE, ID 83705

Sheet Title: COVER SHEET

Designed by: SJBD
Checked by: SJBD
Drawn by: A. RICO
Approved by: SJBD

Revisions:

#	Description	Date
0	100% ISSUED FOR CONSTRUCTION	10/24/25

Seal: PROFESSIONAL ENGINEER LICENSED 13564 STATE OF IDAHO SARAH E. BALLOCK-DIXON

BLM Project # 140L0624F0150
Project # 070117.023
Date: 10/24/2025

G-001

Sheet 1 of 28

11/15/2022 9:25 AM 100% ISSUED FOR CONSTRUCTION Q:\LBYD Federal Project Files\01-Active Projects\070117.023 - NIFC 115 & 410A\03 Drawings\CAD\070117.023G-002_NIFC.dwg

CODE REVIEW INFORMATION

GOVERNING CODES:

CODES ADOPTED BY THE BUREAU OF LAND MANAGEMENT:
2021 INTERNATIONAL BUILDING CODE (IBC)
2021 INTERNATIONAL EXISTING BUILDING CODE (IEBC)
2021 INTERNATIONAL FIRE CODE (IFC)
2021 INTERNATIONAL MECHANICAL CODE (IMC)
2021 INTERNATIONAL PLUMBING CODE (IPC)
2021 INTERNATIONAL ENERGY CONSERVATION CODE (IECC)
ASHRAE 90.1-2019
2020 NFPA 70 NATIONAL ELECTRICAL CODE
2022 NFPA 72 NATIONAL FIRE ALARM AND SIGNALING CODE
2021 NFPA 101 LIFE SAFETY CODE
ABAAS ARCHITECTURAL BARRIERS ACT ACCESSIBILITY STANDARDS
2022 ASCE/SEI 7

2021 IBC EXISTING OCCUPANCY CLASSIFICATION: B
FIRE SPRINKLER SYSTEM: NOT PROVIDED
EXISTING CONSTRUCTION TYPE: III
AREA OF WORK = 5,454 SF
COMMON PATH OF EGRESS TRAVEL FROM SECTION 1006.2.1 = SHALL NOT EXCEED 75 FEET
EXIT ACCESS TRAVEL DISTANCE FROM TABLE 1017.2
FOR B OCCUPANCY, WITHOUT SPRINKLER SYSTEM = 200 FEET

SCOPE OF WORK:
SCOPE OF WORK IN EXISTING BUILDING IS LIMITED AND DOES NOT INCLUDE CHANGES TO THE EXISTING OCCUPANCY, MEANS OF EGRESS OR BUILDING STRUCTURE. WORK CONSISTS OF RECONFIGURING EXISTING OFFICES AND BREAKROOM AS INDICATED IN THE CONTRACT DOCUMENTS. WORK AREA EXCLUDES OTHER PORTIONS OF THE EXISTING BUILDING THAT REMAIN UNCHANGED AND ARE NOT INCLUDED IN THIS ANALYSIS.

IEBC 2021 ANALYSIS

604.1 LEVEL 3 ALTERATIONS APPLY WHERE THE WORK AREA EXCEEDS 50 PERCENT OF THE BUILDING AREA.

704.1 ALTERATIONS SHALL BE DONE IN A MANNER THAT MAINTAINS THE LEVEL OF PROTECTION PROVIDED FOR THE MEANS OF EGRESS.

801.4 NEW CONSTRUCTION ELEMENTS, COMPONENTS, SYSTEMS, AND SPACES SHALL COMPLY WITH THE REQUIREMENTS OF THE INTERNATIONAL BUILDING CODE.

804.5.1 WORK AREAS SHALL BE PROVIDED WITH TWO EGRESS DOORWAYS IN ACCORDANCE WITH THE REQUIREMENTS OF SECTIONS 804.5.1.1 AND 804.5.1.2.

804.5.1.1 IN ANY WORK AREA, ALL ROOMS AND SPACES HAVING AN OCCUPANT LOAD GREATER THAN 50 OR IN WHICH THE TRAVEL DISTANCE TO AN EXIT EXCEEDS 75 FEET SHALL HAVE NOT FEWER THAN TWO EGRESS DOORWAYS.

804.7 DEAD-END CORRIDORS IN ANY WORK AREA SHALL NOT EXCEED 35 FEET.

901.2 IN ADDITION TO THE PROVISIONS OF THIS CHAPTER, WORK SHALL COMPLY WITH ALL REQUIREMENTS OF CHAPTERS 7 AND 8.

907.1 LEVEL 3 ALTERATIONS ARE PERMITTED WITHOUT REQUIRING THE ENTIRE BUILDING TO COMPLY WITH THE ENERGY REQUIREMENTS OF THE IECC. THE ALTERATIONS SHALL CONFORM TO THE ENERGY REQUIREMENTS OF THE IECC.

CODE PLAN LEGEND

OCCUPANCY TAG:
ROOM NAME
101
88888 SF = ###
###

- ROOM / AREA NAME
- ROOM / AREA NUMBER
- SPACE AREA
- NUMBER OF OCCUPANTS
- OCCUPANT LOAD FACTOR

X"
XX
X"

- EXIT WIDTH REQUIRED
- OCCUPANT LOAD
- EXIT WIDTH PROVIDED

EXIT PATH

FEC — FIRE EXTINGUISHER CABINET AND EXTINGUISHER - SEE SPECIFICATIONS

FE — SURFACE MOUNTED FIRE EXTINGUISHER - SEE SPECIFICATIONS

NOTE: SEE ELECTRICAL FOR ILLUMINATED EXIT SIGNS.

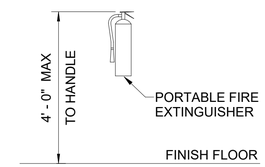

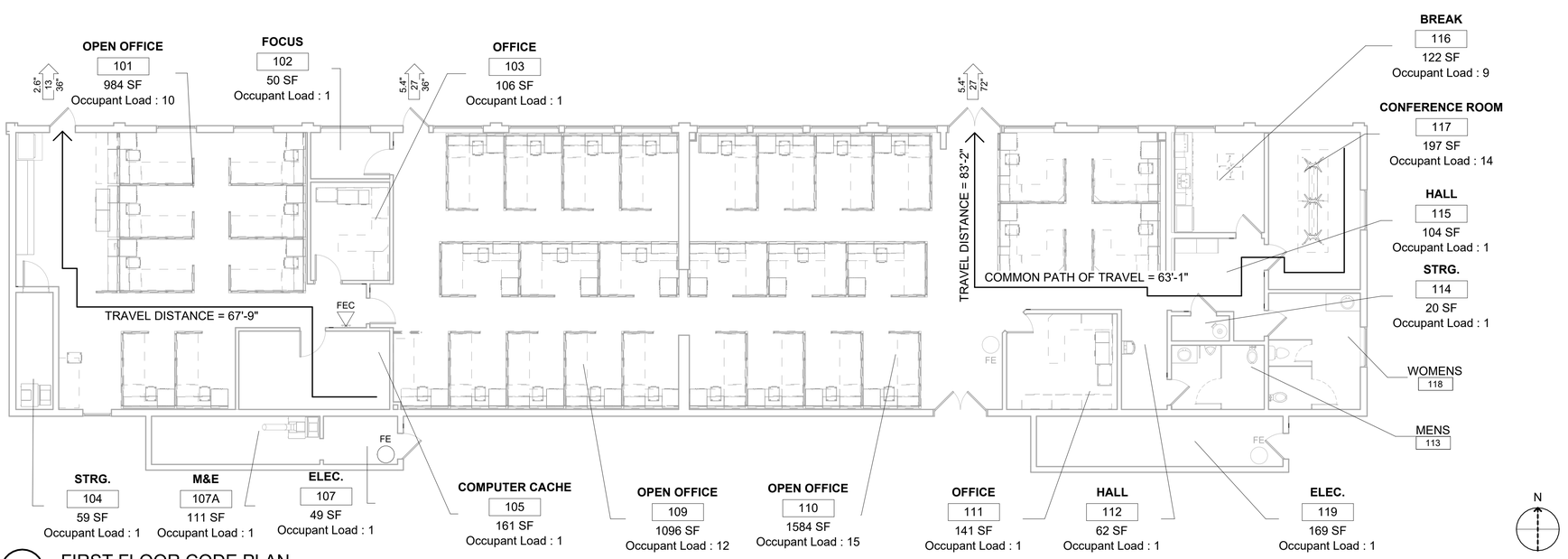

A1 FIRST FLOOR CODE PLAN

ALWAYS THINK SAFETY

Cushing Terrell.
cushingterrell.com
800.757.9522

NATIONAL SYSTEM OF PUBLIC LANDS
U.S. DEPARTMENT OF THE INTERIOR
BUREAU OF LAND MANAGEMENT

NIFC 410A - ITS LIGHTING REPLACE

NATIONAL INTERAGENCY FIRE CENTER
United States Department of the Interior Bureau of Land Management
NIFC 410A, 2133 W Robinson Rd, Boise, ID 83705

Sheet Title: CODE REVIEW

Designed by: MORTENSON
Drawn by: P. MAUNG
Checked by: S. ROBERTS
Approved by: SJBD

Revisions:

#	Description	Date
1	100% ISSUED FOR CONSTRUCTION	10/24/25

LICENSED ARCHITECT AR 984755
10/27/25
Scott D. Roberts
STATE OF IDAHO

BLM Project # 140L0624F0150
Project # 070117.023
Date: 10/24/2025

G-100

Sheet 2 of 28

10/23/2025 3:14:41 PM 100% ISSUED FOR CONSTRUCTION U:\tylermortenson\Documents_Revit\Local\Temp\NWBLM2022_TO23_410A_arch24_tylermortenson.rvt

CLEAR WIDTH OF DOORS

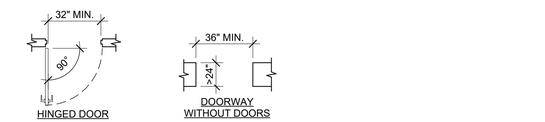

MANEUVERING CLEARANCE AT MANUAL SWINGING DOORS

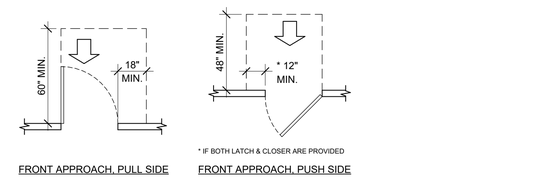

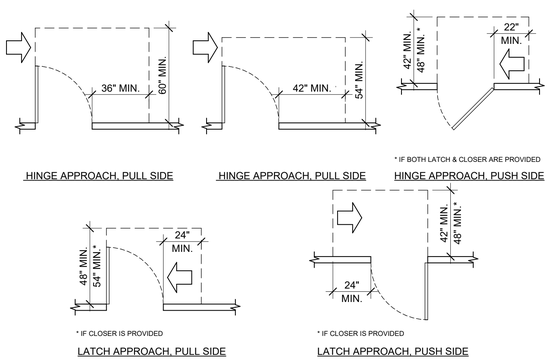

MANEUVERING CLEARANCE AT DOORWAYS WITHOUT DOORS & MANUAL SLIDING / FOLDING DOORS

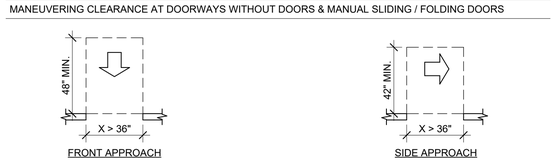

MANEUVERING CLEARANCE AT RECESSED DOORS

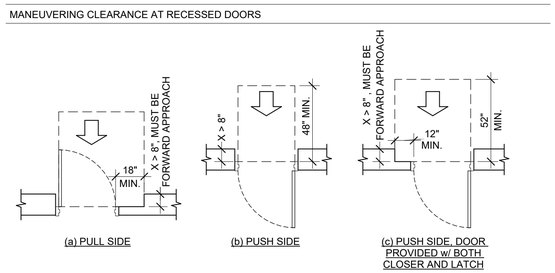

A1 ABA 404 DOORS & DOORWAYS

0 2' 4' 8'

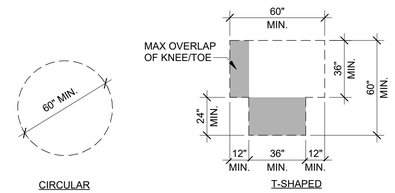

D2 ABA 304 WHEEL CHAIR TURNING SPACE

0 2' 4' 8'

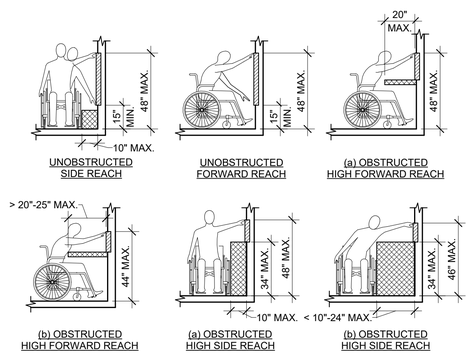

C2 ABA 308 REACH RANGES

0 2' 4' 8'

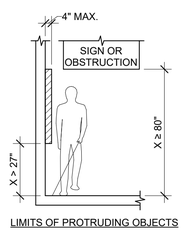

LIMITS OF PROTRUDING OBJECTS

A2 ABA 307 PROTRUDING OBJECTS

0 2' 4' 8'

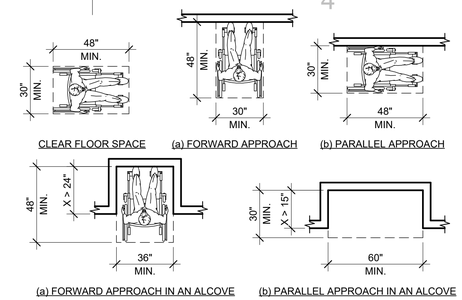

D3 ABA 305 CLEAR FLOOR SPACE

0 2' 4' 8'

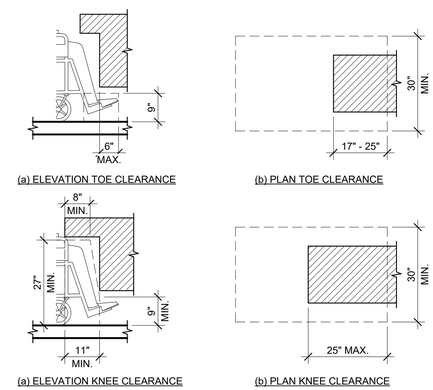

C3 ABA 306 KNEE & TOE CLEARANCE

0 1' 2' 4'

Cushing Terrell.

cushingterrell.com
800.757.9522

NATIONAL SYSTEM OF PUBLIC LANDS
U.S. DEPARTMENT OF THE INTERIOR
BUREAU OF LAND MANAGEMENT

NIFC 410A - ITS LIGHTING REPLACE

NATIONAL INTERAGENCY FIRE CENTER
United States Department of the Interior Bureau of Land Management
NIFC 410A, 2133 W Robinson Rd, Boise, ID 83705

Sheet Title: ACCESSIBILITY DIAGRAMS

Designed by: MORTENSON
Drawn by: P. MAUNG
Checked by: S. ROBERTS
Approved by: SJBD

Revisions:

#	Description	Date
1	100% ISSUED FOR CONSTRUCTION	10/24/25

LICENSED ARCHITECT AR 984755
10/23/25
Scott D. Roberts
STATE OF IDAHO

BLM Project # 140L0624F0150
Project # 070117.023
Date: 10/24/2025

G-101

Sheet 3 of 28

ALWAYS THINK SAFETY

10/23/2025 3:14:44 PM 100% ISSUED FOR CONSTRUCTION U:\tylermortenson\Documents_RevitLocalTemp\NWBLM2022_TO23_410A_arch24_tylermortenson.rvt

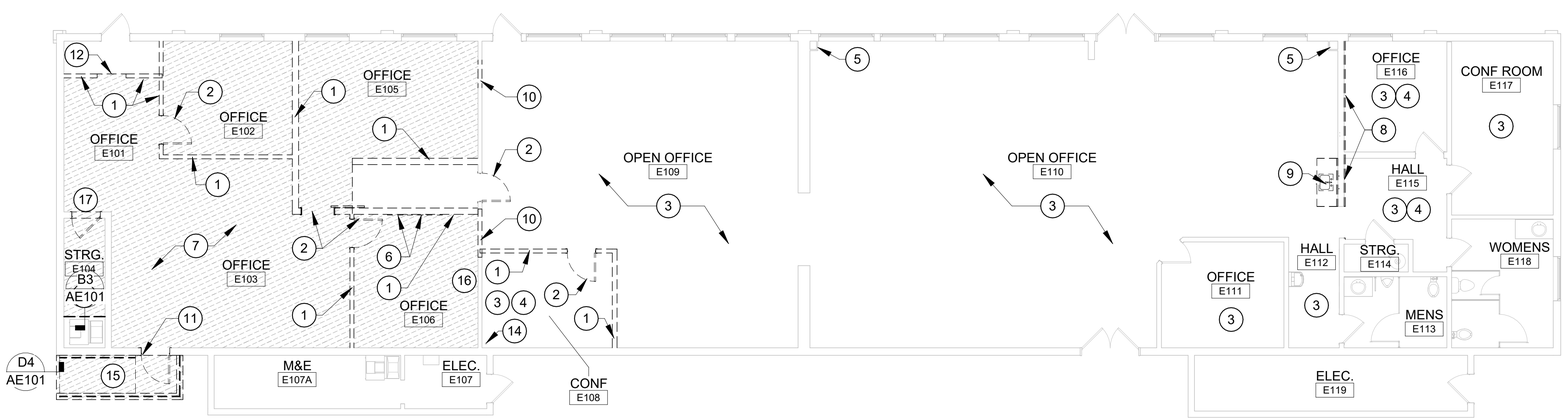

A1 FIRST FLOOR DEMOLITION PLAN

N

0 4' 8' 16'

Cushing Terrell

cushingterrell.com
800.757.9522

DEMOLITION PLAN LEGEND

NAME 101 — ROOM NAME AND NUMBER

X — DEMOLITION KEYNOTE

EXISTING TO BE DEMOLISHED

DEMOLITION GENERAL NOTES

A. REFER TO GENERAL NOTES, SPECIFICATIONS, AND MEP DRAWINGS FOR ADDITIONAL SCOPE, INFORMATION, AND REQUIREMENTS.
B. PROTECT EXTERIOR WINDOW SYSTEMS FROM DUST AND DAMAGE DURING DEMOLITION AND NEW CONSTRUCTION.
C. IN AREAS WHERE NO WORK WILL OCCUR, G.C. TO TAKE SPECIAL PRECAUTIONS TO ELIMINATE DUST AND DEBRIS OF NEARBY CONSTRUCTION FROM ENTERING THESE AREAS.
D. CONTRACTOR SHALL FIELD VERIFY ALL EXISTING CONDITIONS BEFORE WORK BEGINS. IF CONFLICTS OCCUR, NOTIFY GOVERNMENT IMMEDIATELY.
E. DEMOLITION NOTES LISTED ON THIS SHEET CONVEY GENERAL CONDITIONS. CONTRACTOR IS RESPONSIBLE FOR EACH CONDITION NECESSARY TO COMPLETE THE SUCCESSFUL INSTALLATION AND ERECTION OF NEW CONSTRUCTION.

DEMOLITION KEYNOTES

1 DEMOLISH GYPSUM FRAMED WALL IN ITS ENTIRETY. PATCH AND REPAIR ADJACENT WALL AS NEEDED TO MATCH ADJACENT WALL FINISH.
2 DEMOLISH DOOR, FRAME AND ASSOCIATED HARDWARE.
3 DEMOLISH EXISTING CARPET AND RUBBER WALL BASE THROUGHOUT ENTIRETY OF ROOM NOTED.
4 SEE ELECTRICAL DRAWINGS FOR ADDITIONAL REQUIREMENTS.
5 EXISTING ROOF DRAIN TO REMAIN.
6 DEMOLISH EXISTING ELECTRICAL PANELS, SEE ELECTRICAL PLANS.
7 DEMOLISH EXISTING FLOORING, RUBBER WALL BASE, AND RAISED FLOOR THROUGHOUT HATCHED AREA.
8 DEMOLISH EXISTING FURRED WALL AND PLUMBING, CAP PLUMBING AS REQUIRED. CMU WALL TO REMAIN, PATCH WALL AS NECESSARY. SEE PLUMBING ALSO.
9 DEMOLISH EXISTING SINK, COUNTERTOP, CABINET, AND FURRED WALL. SEE PLUMBING ALSO.
10 DEMOLISH EXISTING WALL AS NEEDED FOR NEW DOOR OPENING AND FRAMING.
11 DEMOLISH EXISTING DOOR, FRAME, AND ASSOCIATED HARDWARE AND PREP FOR NEW WINDOW.
12 REMOVE STEP AT EDGE OF RAISED FLOOR.
13 DEMOLISH EXISTING RAISED FLOOR UP TO THE EXISTING MECHANICAL UNIT IN THIS ROOM. RAISED FLOOR UNDER MECHANICAL UNIT TO REMAIN.
14 EXISTING WATER LINE, PROTECT FROM DAMAGE.
15 DEMOLISH EXISTING EXTERIOR RAMP, GUARDRAIL, AND HANDRAIL IN ITS ENTIRETY.
16 DEMOLISH WOOD DATA CHASE IN ITS ENTIRETY. SEE ELECTRICAL ALSO.
17 REMOVE EXISTING DOOR, FRAME, AND HARDWARE AND RETAIN FOR REINSTALLATION. ADJUST DOOR OPENING TO MATCH NEW FLOOR HEIGHT. PATCH TOP OF OPENING PER DOOR DETAILS.

ALWAYS THINK SAFETY

NATIONAL SYSTEM OF PUBLIC LANDS
U.S. DEPARTMENT OF THE INTERIOR
BUREAU OF LAND MANAGEMENT

NIFC 410A - ITS LIGHTING REPLACE

NATIONAL INTERAGENCY FIRE CENTER
United States Department of the Interior Bureau of Land Management
NIFC 410A, 2133 W Robinson Rd, Boise, ID 83705

Sheet Title: FIRST FLOOR DEMOLITION PLAN

Designed by: MORTENSON
Drawn by: P. MAUNG
Checked by: S. ROBERTS
Approved by: SJBD

Revisions:

#	Description	Date
1	100% ISSUED FOR CONSTRUCTION	10/24/25

LICENSED ARCHITECT AR 984755
10/27/25
Scott D. Roberts
STATE OF IDAHO

BLM Project # 140L0624F0150

Project # 070117.023

Date: 10/24/2025

AD101

Sheet 4 of 28

10/23/2025 3:14:46 PM 100% ISSUED FOR CONSTRUCTION U:\tylermortenson\Documents_Revit\Local\Temp\NWBLM2022_TO23_410A_arch24_tylermortenson.rvt

RM E116 - EXISTING CEILING

RM E115 - EXISTING CEILING

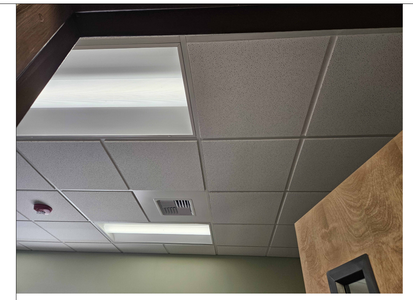

RM E117 - EXISTING CEILING

RM E108 - EXISTING CEILING

RM E109 - EXISTING CEILING

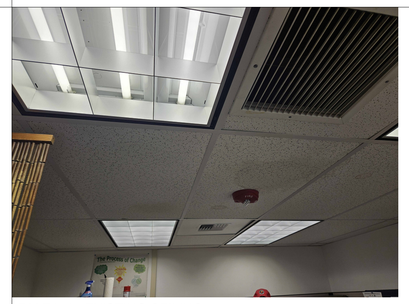

RM E111 - EXISTING CEILING

RM E110 - EXISTING CEILING

RM E105 - EXISTING CEILING

NOTE:
EXISTING IMAGES ARE FOR REFERENCE ONLY, VERIFY ALL ELEMENTS AND EXISTING CONDITIONS IN FIELD.

C1 EXISTING CONDITION IMAGES

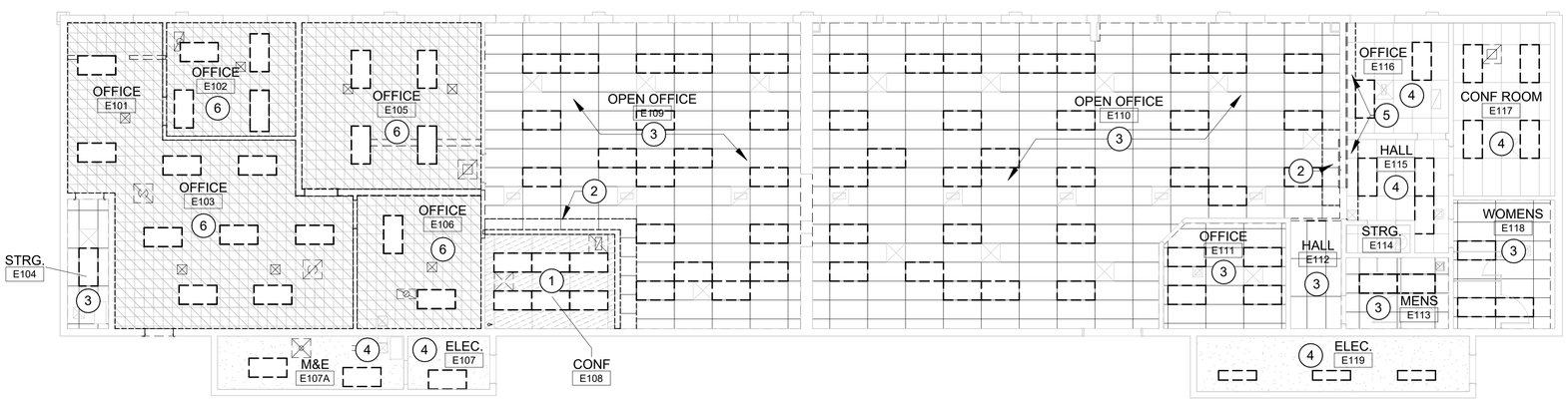

A1 FIRST FLOOR DEMOLITION REFLECTED CEILING PLAN

N

0 4' 8' 16'

DEMOLITION REFLECTED CEILING LEGEND

- 2X4 ACOUSTICAL LAY-IN CEILING TILE TO BE DEMOLISHED. EXISTING GRID TO REMAIN
- 2X4 ACOUSTICAL LAY-IN CEILING TO REMAIN
- 1X1 GLUED CEILING TILE TO BE DEMOLISHED
- GYPSUM BOARD CEILING TO REMAIN
- EXPOSED STRUCTURE
- 2X4 ACOUSTICAL LAY-IN CEILING TILE AND GRID TO BE DEMOLISHED
- LIGHTING TO BE DEMOLISHED- SEE ELECTRICAL
- LIGHTING TO REMAIN- SEE ELECTRICAL
- HVAC REGISTERS TO BE DEMOLISHED- SEE MECHANICAL
- HVAC REGISTERS TO REMAIN- SEE MECHANICAL
- (X) DEMOLITION KEYNOTE
- EXISTING TO BE DEMOLISHED
- EXISTING TO REMAIN

DEMOLITION GENERAL NOTES

A. REFER TO GENERAL NOTES, SPECIFICATIONS, AND MEP DRAWINGS FOR ADDITIONAL SCOPE, INFORMATION, AND REQUIREMENTS.
B. PROTECT EXTERIOR WINDOW SYSTEMS FROM DUST AND DAMAGE DURING DEMOLITION AND NEW CONSTRUCTION.
C. IN AREAS WHERE NO WORK WILL OCCUR, G.C. TO TAKE SPECIAL PRECAUTIONS TO ELIMINATE DUST AND DEBRIS OF NEARBY CONSTRUCTION FROM ENTERING THESE AREAS.
D. CONTRACTOR SHALL FIELD VERIFY ALL EXISTING CONDITIONS BEFORE WORK BEGINS. IF CONFLICTS OCCUR, NOTIFY GOVERNMENT IMMEDIATELY.
E. DEMOLITION NOTES LISTED ON THIS SHEET CONVEY GENERAL CONDITIONS. CONTRACTOR IS RESPONSIBLE FOR EACH CONDITION NECESSARY TO COMPLETE THE SUCCESSFUL INSTALLATION AND ERECTION OF NEW CONSTRUCTION.

(#) DEMOLITION KEYNOTES

1. REMOVE EXISTING CEILING TILE AND GRID WITHIN ENTIRETY OF ROOM NOTED. SEE ELECTRICAL AND MECHANICAL DRAWINGS FOR ADDITIONAL REQUIREMENTS.
2. REMOVE EXISTING CEILING GRID TO EXTENT REQUIRED FOR WALL DEMOLITION.
3. REMOVE EXISTING CEILING TILE WITHIN ENTIRETY OF ROOM NOTED, EXISTING GRID TO REMAIN. SEE ELECTRICAL AND MECHANICAL DRAWINGS FOR ADDITIONAL REQUIREMENTS.
4. EXISTING CEILING TO REMAIN, SEE ELECTRICAL DRAWINGS FOR ADDITIONAL REQUIREMENTS.
5. ADJUST CEILING GRID AND TILES AS NEEDED FOR DEMOLITION OF EXISTING FURRED WALLS, AND INSTALLATION OF NEW FURRED WALLS.
6. REMOVE EXISTING GLUED TILE CEILING AND SUBSTRATE WITHIN ENTIRETY OF ROOM NOTED. SEE ELECTRICAL AND MECHANICAL DRAWINGS FOR ADDITIONAL REQUIREMENTS.

ALWAYS THINK SAFETY

Cushing Terrell
cushingterrell.com
800.757.9522

NATIONAL SYSTEM OF PUBLIC LANDS
U.S. DEPARTMENT OF THE INTERIOR
BUREAU OF LAND MANAGEMENT

NIFC 410A - ITS LIGHTING REPLACE

NATIONAL INTERAGENCY FIRE CENTER
United States Department of the Interior Bureau of Land Management
NIFC 410A, 2133 W Robinson Rd, Boise, ID 83705

Sheet Title: FIRST FLOOR DEMOLITION REFLECTED CEILING PLAN

Designed by: MORTENSON
Drawn by: P. MAUNG
Checked by: S. ROBERTS
Approved by: SJBD

Revisions:

#	Description	Date
1	100% ISSUED FOR CONSTRUCTION	10/24/25

LICENSED ARCHITECT
AR 984755
10/27/25
Scott D. Roberts
STATE OF IDAHO

BLM Project # 140L0624F0150
Project # 070117.023
Date: 10/24/2025

AD102

10/23/2025 3:15:04 PM 100% ISSUED FOR CONSTRUCTION U:\tylermortenson\Documents_RevitLocalTemp\NWBLM2022_TO23_410A_arch24_tylermortenson.rvt

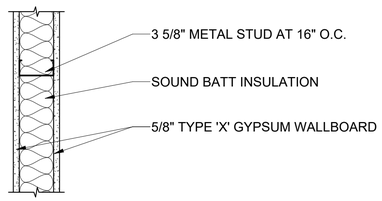

A 3 5/8" PARTITION - STC 45 MIN

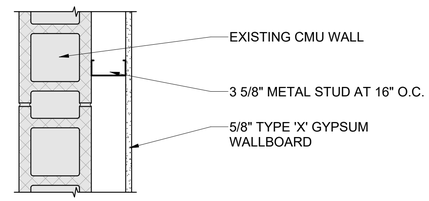

B 3 5/8" FURRING WALL

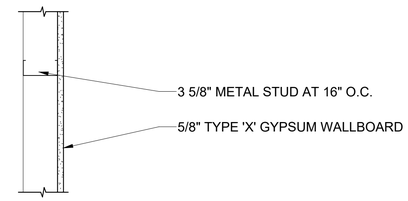

C 3 5/8" CHASE WALL

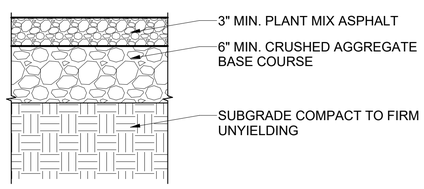

TYPICAL ASPHALT PAVING

GENERAL WALL NOTES

A. THE CONTRACTOR SHALL CALL THE GOVERNMENT FOR SPECIAL INSPECTION OF THESE SYSTEM INSTALLATIONS PRIOR TO COVERING UP THE WORK.
B. SEAL ALL PENETRATIONS THROUGH AIR BARRIERS WITH SPRAY FOAM, THEN FLASH AND SEAL PER AIR BARRIER MANUFACTURER'S REQUIREMENTS.
C. EXTEND ALL WALL COMPONENTS 6" ABOVE ADJACENT CEILINGS UNLESS NOTED OTHERWISE.

ASSEMBLY TYPE LEGEND

XX — ASSEMBLY TYPE
— ASSEMBLY MODIFIER, PER TYPE

MODIFIERS:
1. INSTALL 5/8" MOISTURE RESISTANT TYPE 'X' GYPSUM BOARD IN LIEU OF 5/8" TYPE 'X' GYPSUM WALL BOARD AT THIS WALL. INSTALL TILE BACKING PANELS IN LIEU OF GYPSUM BOARD AT LOCATIONS TO RECIEVE TILE.

ALWAYS THINK SAFETY

Cushing Terrell
cushingterrell.com
800.757.9522

NIFC 410A - ITS LIGHTING REPLACE

NATIONAL INTERAGENCY FIRE CENTER
United States Department of the Interior Bureau of Land Management
NIFC 410A, 2133 W Robinson Rd, Boise, ID 83705

Sheet Title: ASSEMBLIES

Designed by: MORTENSON
Drawn by: P. MAUNG
Checked by: S. ROBERTS
Approved by: SJBD

Revisions:

#	Description	Date
1	100% ISSUED FOR CONSTRUCTION	10/24/25

LICENSED ARCHITECT AR 984755
10/27/25
Scott D. Roberts
STATE OF IDAHO

BLM Project # 140L0624F0150
Project # 070117.023
Date: 10/24/2025

AE001

10/23/2025 3:15:06 PM 100% ISSUED FOR CONSTRUCTION U:\tylermortenson\Documents_RevitLocalTemp\NWBLM2022_TO23_410A_arch24_tylermortenson.rvt

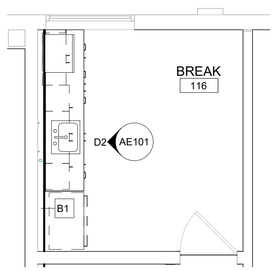

D1 BREAK ROOM ENLARGED PLAN

0 2' 4' 8'

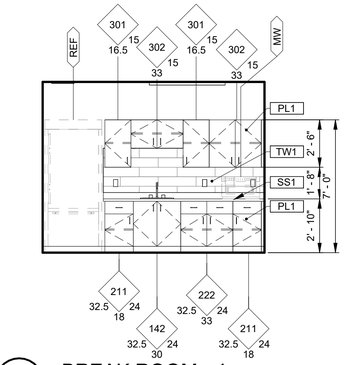

D2 BREAK ROOM - 4

0 2' 4' 8'

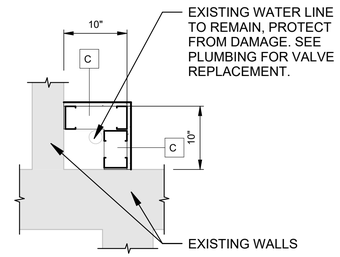

D3 CHASE AT WATER SUPPLY

0 0.5' 1' 2'

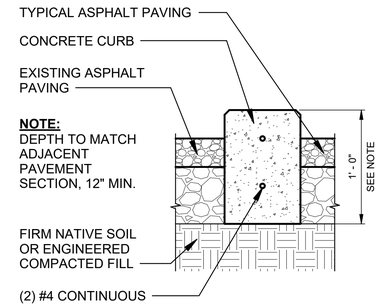

D4 TYPICAL CURB

0 0.25' 0.5' 1' 1.5'

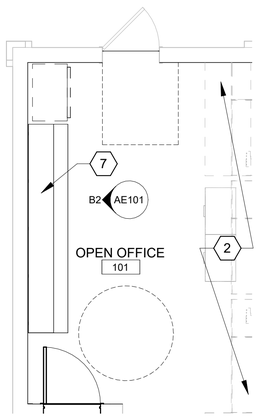

B1 OPEN OFFICE ENLARGED PLAN

0 2' 4' 8'

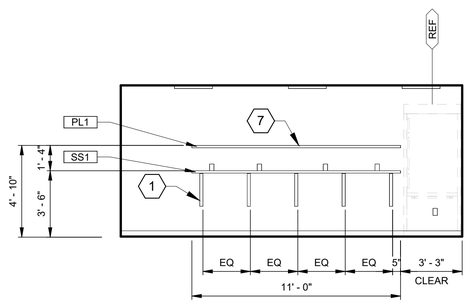

B2 OPEN OFFICE - 4

0 2' 4' 8'

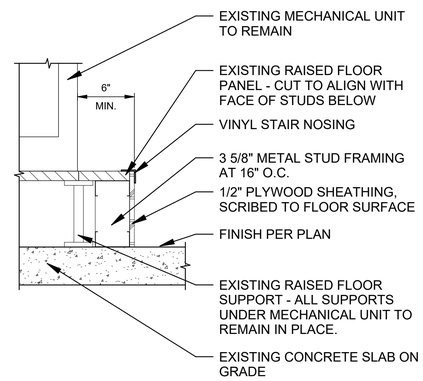

B3 RAISED FLOOR EDGE

0 0.25' 0.5' 1' 1.5'

EQUIPMENT SCHEDULE		
EQ #	DESCRIPTION	SIZE
MW	PROVIDED AND INSTALLED BY GOVERNMENT	24"W x 20"D x 14"H
REF	PROVIDED AND INSTALLED BY GOVERNMENT	36"W x 24"D x 84"H

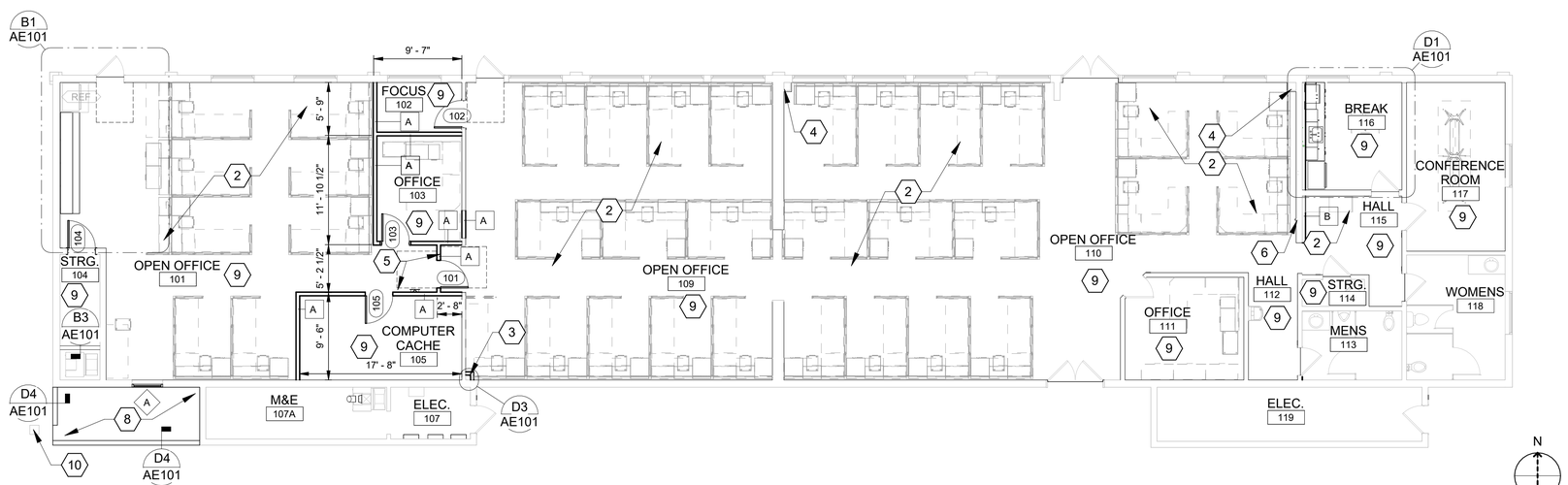

A1 FIRST FLOOR PLAN

0 4' 8' 16'

Cushing Terrell.

cushingterrell.com
800.757.9522

PLAN LEGEND

- NAME 101 — ROOM NAME AND NUMBER
- NAME 101 — ROOM NAME AND NUMBER
- X — KEYNOTE
- DIMENSION TO FACE OF FRAMING
- 1i — EQUIPMENT, SEE SPECIFICATIONS.

CASEWORK LEGEND

LOCK — L; # — MODIFICATION NOTE; CABINET NUMBER***; ###M; HEIGHT** — H; D — DEPTH*; W — WIDTH

* INDICATES DEPTH OF BASE CABINET - COUNTERTOPS OVERHANG 1 1/2"

** INDICATES APPROXIMATE HEIGHT OF CABINET, SEE ELEVATIONS FOR OVERALL HEIGHT OF CABINET AND COUNTERTOP.

*** "M" INDICATES A DESIGN MODIFICATION TO THE STANDARD CASEWORK DESIGNATED

GENERAL SHEET NOTES

A. MAINTAIN THE INTEGRITY OF ALL REMAINING BUILDING SYSTEMS AND RATINGS. REPAIR ANY DAMAGE DONE TO SURROUNDING AREAS/CONSTRUCTION DURING DEMOLITION.

B. ALL EXISTING CONDITIONS ARE NOT INDICATED ON THE DRAWINGS. CONTRACTOR SHALL CAREFULLY EXAMINE THE EXISTING INSTALLATION AND ALL PROJECT DRAWINGS TO BECOME FAMILIAR WITH THE SCOPE OF WORK.

C. CONTRACTOR SHALL PATCH AND REPAIR ANY DAMAGE OR PENETRATIONS AT ALL ELEMENTS TO REMAIN (INCLUDING BUT NOT LIMITED TO WALLS, CEILINGS, FLOORS, ETC) CAUSED BY DEMOLITION ACTIVITIES OR REMOVAL OF ELECTRICAL, MECHANICAL, ARCHITECTURAL ELEMENTS. REPLACE ITEMS NOT REPAIRABLE TO ORIGINAL STATE. EXISTING FINISH MATERIALS, INCLUDING CEILINGS, TRIM, ETC., SHALL BE PROTECTED AND RETAINED, UNLESS NOTED OTHERWISE.

D. UNLESS OTHERWISE NOTED, ALL DIMENSIONS ARE TO THE FACE OF STUDS FOR GYPSUM WALL BOARD WALL/PARTITIONS. UNLESS OTHERWISE NOTED, ALL DIMENSIONS TO EXISTING WALLS ARE FROM FINISHED FACE.

E. SEE IN SHEETS FOR NEW FINISHES.

SHEET KEYNOTES

1. 21" DEEP X 2" WIDE BRACKET. COLOR TO BE DETERMINED BY GOVERNMENT.
2. FURNITURE/CUBICLE LAYOUT AND EQUIPMENT BY GOVERNMENT, NOT IN CONTRACT.
3. EXISTING WATER LINE TO REMAIN, PROTECT FROM DAMAGE. SEE PLUMBING FOR VALVE REPLACEMENT.
4. EXISTING ROOF DRAIN TO REMAIN, PROTECT FROM DAMAGE.
5. NEW ACCESS CONTROL. SEE DOOR HARDWARE AND ELECTRICAL.
6. PATCH WALL AT REMOVED SINK AND CABINET. PREP AND FINISH TO MATCH ADJACENT WALL FINISHES.
7. 16" DEEP SHELF WITH GROMMETS AT 36" O.C.
8. REGRADE WHERE RAMP WAS REMOVED AND REFINISH WITH TYPICAL ASPHALT PAVING. GRADE AWAY FROM THE BUILDING AND TOWARDS EXISTING STORM DRAIN AT 2% MINIMUM SLOPE.
9. PATCH, LEVEL, AND PREPARE EXISTING SLAB FOR NEW FLOORING INSTALLATION IN THIS ROOM.
10. EXISTING STORM DRAIN.

ALWAYS THINK SAFETY

NATIONAL SYSTEM OF PUBLIC LANDS
U.S. DEPARTMENT OF THE INTERIOR
BUREAU OF LAND MANAGEMENT

NIFC 410A - ITS LIGHTING REPLACE

NATIONAL INTERAGENCY FIRE CENTER
United States Department of the Interior Bureau of Land Management
NIFC 410A, 2133 W Robinson Rd, Boise, ID 83705

Sheet Title: FIRST FLOOR PLAN

Designed by: MORTENSON | Checked by: S. ROBERTS
Drawn by: P. MAUNG | Approved by: SJBD

Revisions:

#	Description	Date
1	100% ISSUED FOR CONSTRUCTION	10/24/25

LICENSED ARCHITECT AR 984755
10/27/25
Scott D. Roberts
STATE OF IDAHO

BLM Project # 140L0624F0150

Project # 070117.023

Date: 10/24/2025

AE101

Sheet 7 of 28

10/23/2025 3:15:09 PM 100% ISSUED FOR CONSTRUCTION U:\tylermortenson\Documents_Revit\LocalTemp\NWBLM2022_TO23_410A_arch24_tylermortenson.rvt

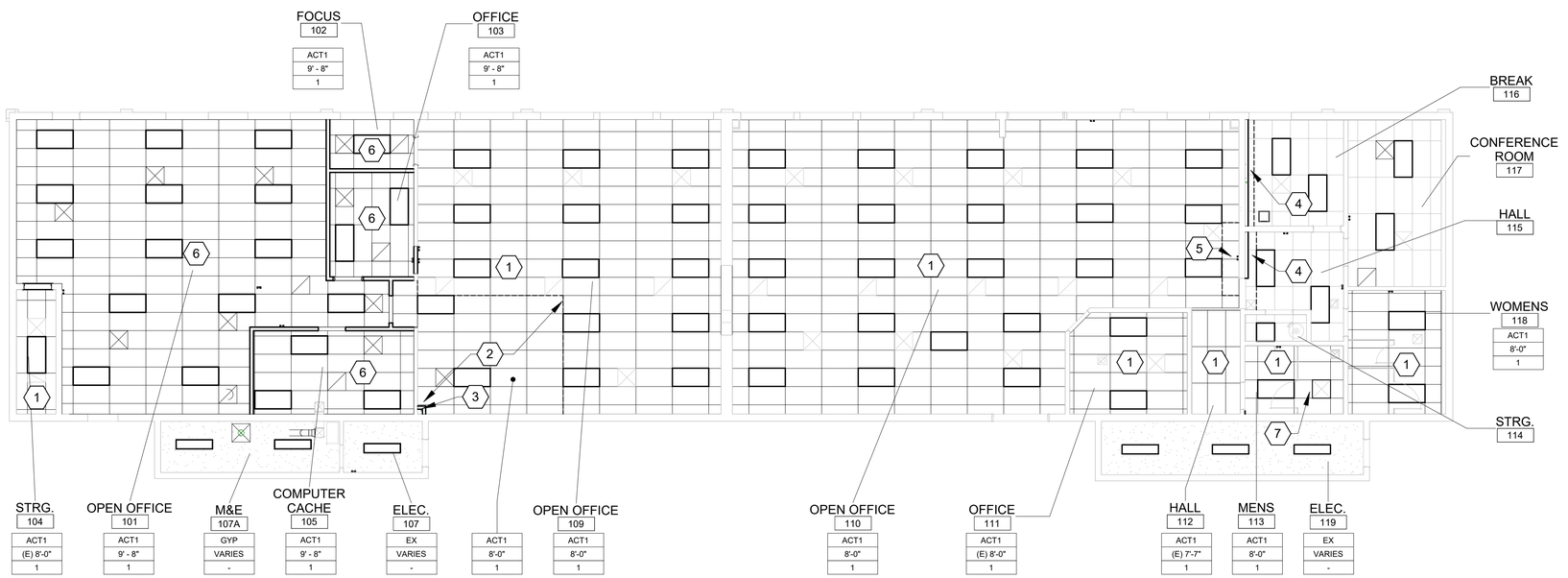

A1 FIRST FLOOR REFLECTED CEILING PLAN

REFLECTED CEILING LEGEND

CEILING MATERIAL → ACT
CEILING HEIGHT → VARIES
ADDITIONAL NOTES → NOTES

- 2X4 ACOUSTICAL LAY-IN CEILING
- 2X4 ACOUSTICAL LAY-IN CEILING TO REMAIN
- GYPSUM BOARD CEILING TO REMAIN
- EXPOSED STRUCTURE
- LIGHTING - SEE ELECTRICAL
- LIGHTING TO REMAIN- SEE ELECTRICAL
- HVAC REGISTERS - SEE MECHANICAL
- HVAC REGISTERS TO REMAIN- SEE MECHANICAL
- X → KEYNOTE
- → EXISTING TO REMAIN

CEILING MATERIAL

ACT1	2X4 ACOUSTICAL LAY IN PANEL
EXP	EXPOSED STRUCTURE
GYP	GYPSUM BOARD
EX	EXISTING CEILING TO REMAIN

CEILING HEIGHT

VAR	VARIES

ADDITIONAL NOTES

1. VERIFY EXISTING CEILING HEIGHT IN FIELD.

GENERAL NOTES - CEILING

A. VERIFY ALL CONDITIONS AND DIMENSIONS IN FIELD. EXISTING CONDITIONS OF WINDOWS AND OTHER BUILDING ELEMENTS MAY VARY.
B. FIELD VERIFY ALL DIMENSIONS PRIOR TO FABRICATION.
C. COORDINATE WITH THE MECHANICAL AND ELECTRICAL DRAWINGS AND SPECIFICATIONS FOR THE LOCATION AND PHYSICAL SIZES OF ALL CEILING GRILLS, DIFFUSERS, FIXTURES, CANS, AND RELATED ITEMS.

SHEET KEYNOTES

1 PROVIDE NEW CEILING TILE WITHIN EXISTING CEILING GRID OF ROOM NOTED. SEE ELECTRICAL AND MECHANICAL DRAWINGS FOR ADDITIONAL REQUIREMENTS.
2 PROVIDE NEW CEILING GRID AND TILE WITHIN AREA NOTED, MATCH ADJACENT CEILING HEIGHT. SEE ELECTRICAL AND MECHANICAL DRAWINGS FOR ADDITIONAL REQUIREMENTS.
3 REPLACE WATER SHUT OFF VALVE ABOVE CEILING, SEE PLUMBING.
4 ADJUST CEILING GRID AND TILE AS NEEDED TO ACCOMODATE NEW FURRED WALLS.
5 INFILL CEILING TILE AND GRID TO FILL SPACE WHERE FURRED WALL WAS DEMOLISHED.
6 PROVIDE NEW CEILING GRID AND TILE WITHIN AREA NOTED AT HEIGHT NOTED. SEE ELECTRICAL AND MECHANICAL DRAWINGS FOR ADDITIONAL REQUIREMENTS.
7 ADD NEW CEILING CROSS TEE AND REPLACE 2X2 TILE ADJACENT TO DIFFUSER.

ALWAYS THINK SAFETY

Cushing Terrell
cushingterrell.com
800.757.9522

NATIONAL SYSTEM OF PUBLIC LANDS
U.S. DEPARTMENT OF THE INTERIOR
BUREAU OF LAND MANAGEMENT

NIFC 410A - ITS LIGHTING REPLACE

NATIONAL INTERAGENCY FIRE CENTER
United States Department of the Interior Bureau of Land Management
NIFC 410A, 2133 W Robinson Rd, Boise, ID 83705

Sheet Title: FIRST FLOOR REFLECTED CEILING PLAN

Designed by: MORTENSON
Drawn by: P. MAUNG
Checked by: S. ROBERTS
Approved by: SJBD

Revisions:

#	Description	Date
1	100% ISSUED FOR CONSTRUCTION	10/24/25

LICENSED ARCHITECT AR 984755
10/27/25
Scott D. Roberts
STATE OF IDAHO

BLM Project # 140L0624F0150
Project # 070117.023
Date: 10/24/2025

AE102

10/23/2025 3:15:11 PM 100% ISSUED FOR CONSTRUCTION U:\tylermortenson\Documents_RevitLocalTemp\NWBLM2022_TO23_410A_arch24_tylermortenson.rvt

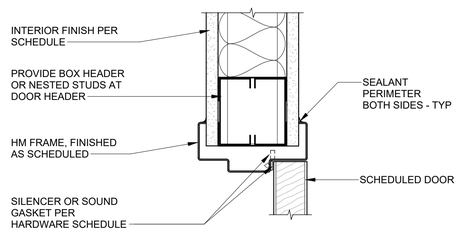

C1 INT HM DOOR HEAD AT STUD WALL

0 0.125' 0.25' 0.5' 0.75'

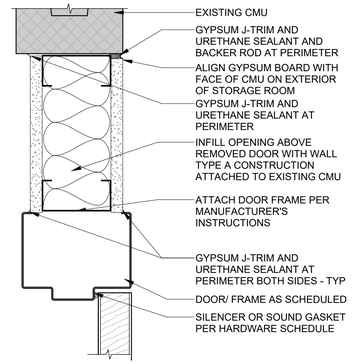

C2 INTERIOR HM DOOR HEAD AT CMU

0 0.125' 0.25' 0.5' 0.75'

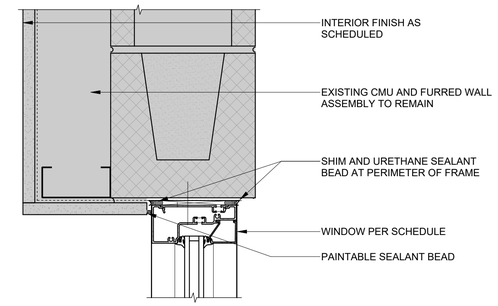

C3 EXT STOREFROND HEAD AT CMU

0 0.125' 0.25' 0.5' 0.75'

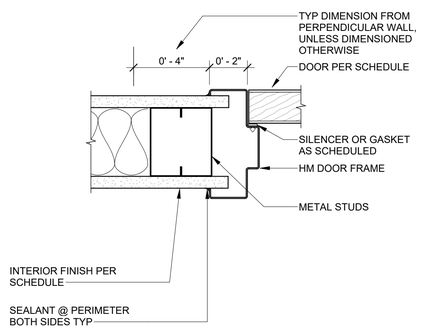

B1 INT HM DOOR JAMB AT STUD WALL

0 0.125' 0.25' 0.5' 0.75'

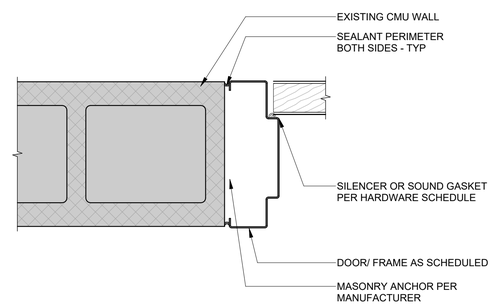

B2 INTERIOR HM DOOR JAMB AT CMU

0 0.125' 0.25' 0.5' 0.75'

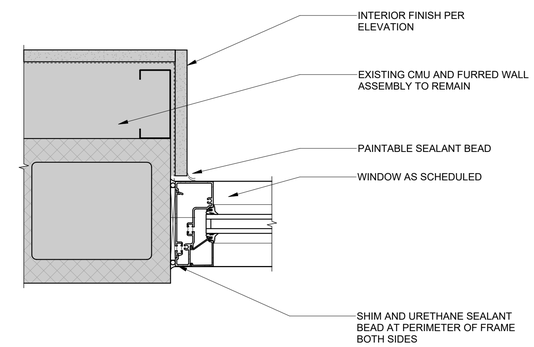

B3 EXT STOREFROND JAMB AT CMU

0 0.125' 0.25' 0.5' 0.75'

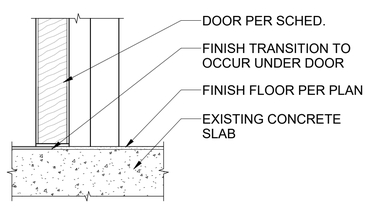

A1 INT HM DOOR SILL

0 0.125' 0.25' 0.5' 0.75'

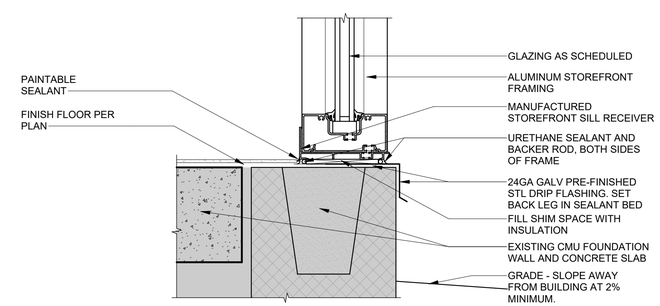

A3 EXT STOREFROND SILL AT CMU

0 0.125' 0.25' 0.5' 0.75'

ALWAYS THINK SAFETY

Cushing Terrell
cushingterrell.com
800.757.9522

NATIONAL SYSTEM OF PUBLIC LANDS
U.S. DEPARTMENT OF THE INTERIOR
BUREAU OF LAND MANAGEMENT

NIFC 410A - ITS LIGHTING REPLACE

NATIONAL INTERAGENCY FIRE CENTER
United States Department of the Interior Bureau of Land Management
NIFC 410A, 2133 W Robinson Rd, Boise, ID 83705

Sheet Title: DOOR AND WINDOW DETAILS

Designed by: MORTENSON
Drawn by: MORTENSON
Checked by: S. ROBERTS
Approved by: SJBD

Revisions:

#	Description	Date
1	100% ISSUED FOR CONSTRUCTION	10/24/25

LICENSED ARCHITECT AR 984755
10/27/25
Scott D. Roberts
STATE OF IDAHO

BLM Project # 140L0624F0150
Project # 070117.023
Date: 10/24/2025

AE501

Sheet 9 of 28

10/23/2025 3:15:13 PM 100% ISSUED FOR CONSTRUCTION U:\tylermortenson\Documents_RevitLocalTemp\NWBLM2022_TO23_410A_arch24_tylermortenson.rvt

DOOR, FRAME AND HARDWARE SCHEDULE																		
DOOR NUMBER	ROOM NUMBER	ROOM NAME	DOOR							FRAME						FIRE RATING	HARDWARE	
			SIZE			MTL	TYPE	GLAZE	NOTES	MTL	TYPE	DETAIL			NOTES		GROUP	NOTES
			W	H	T							HEAD	JAMB	SILL				
101	101	OPEN OFFICE	3' - 0"	7' - 0"	0' - 1 3/4"	WD	NL	T	-	HM	1	C1/AE501	B1/A501	A1/AE501	-	-	3	-
102	102	FOCUS	3' - 0"	7' - 0"	0' - 1 3/4"	WD	NL	T	-	HM	1	C1/AE501	B1/A501	A1/AE501	-	-	1	-
103	103	OFFICE	3' - 0"	7' - 0"	0' - 1 3/4"	WD	F	-	-	HM	2	C1/AE501	B1/A501	A1/AE501	-		1	-
104	104	STRG.	3' - 0"	7' - 0"	0' - 1 3/4"	EX	EX	-	1	EX	EX	C2/AE501	B2/AE501	A1/AE501	1	-	-	1
105	105	COMPUTER CACHE	3' - 0"	7' - 0"	0' - 1 3/4"	WD	F	-	-	HM	1	C1/AE501	B1/A501	A1/AE501	-	-	2	-

DOOR HARDWARE

ABBREVIATIONS

AL	ALUMINUM
EX	EXISTING
F	FLUSH DOOR, SEE DOOR TYPES
HM	HOLLOW METAL
IN	1" INSULATED TEMPERED GLAZING
NL	NARROW LITE DOOR, SEE DOOR TYPES
T	1/4" TEMPERED GLAZING
WD	WOOD

DOOR NOTES

1. REINSTALL EXISTING DOOR RETAINED DURING DEMOLITION.

FRAME NOTES

1. REINSTALL EXISTING FRAME RETAINED DURING DEMOLITION.

GENERAL DOOR AND FRAME NOTES

- SEE FLOOR PLANS FOR DOOR LOCATIONS.
- FIELD VERIFY ALL ROUGH OPENING DIMENSIONS PRIOR TO FABRICATION/INSTALLATION.
- PAINT ALL HOLLOW METAL FRAMES.

HARDWARE NOTES

1. REINSTALL EXISTING DOOR HARDWARE RETAINED DURING DEMOLITION. ADJUST SECURITY HARDWARE TO MATCH NEW DOOR HEIGHT.

GENERAL HARDWARE NOTES

- ALL DOORS TO HAVE (3) MORTISE HINGES PER DOOR LEAF.
- ALL DOORS IN HM FRAMES TO HAVE (3) SILENCERS PER DOOR LEAF.
- SEE SPECS FOR SPECIAL CRITERIA AND BASIS OF DESIGN HARDWARE.

HARDWARE GROUPS

1 (OFFICE)

- OFFICE LOCKSET
- HINGES
- SILENCERS
- DOOR STOP / HOLD-OPEN

2 (SECURE STORAGE)

- ELECTROMECHANICAL STOREROOM LOCKSET
- HINGES
- SILENCERS
- ELECTRIFIED HINGE
- DOOR STOP
- HOLD-OPEN CLOSER
- DOOR POSITION SWITCH
- CARD READER

3 (SECURE OFFICE)

- ELECTROMECHANICAL OFFICE LOCKSET
- HINGES
- SILENCERS
- ELECTRIFIED HINGE
- CLOSER
- DOOR STOP / HOLD-OPEN
- DOOR POSITION SWITCH
- CARD READER

WINDOW TYPES

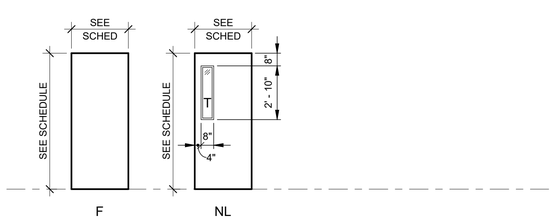

DOOR TYPES

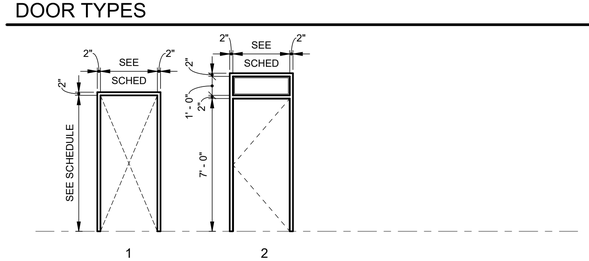

FRAME TYPES

Cushing Terrell.
cushingterrell.com
800.757.9522

NATIONAL SYSTEM OF PUBLIC LANDS
U.S. DEPARTMENT OF THE INTERIOR
BUREAU OF LAND MANAGEMENT

NIFC 410A - ITS LIGHTING REPLACE

NATIONAL INTERAGENCY FIRE CENTER
United States Department of the Interior Bureau of Land Management

NIFC 410A, 2133 W Robinson Rd, Boise, ID 83705

Sheet Title: DOOR AND WINDOW SCHEDULE AND ELEVATIONS

Designed by: MORTENSON
Drawn by: MORTENSON
Checked by: S. ROBERTS
Approved by: SJBD

Revisions:

#	Description	Date
1	100% ISSUED FOR CONSTRUCTION	10/24/25

LICENSED ARCHITECT
AR 984755
10/27/25
Scott D. Roberts
STATE OF IDAHO

BLM Project # 140L0624F0150
Project # 070117.023
Date: 10/24/2025

AE601

Sheet 10 of 28

ALWAYS THINK SAFETY

10/23/2025 3:15:15 PM 100% ISSUED FOR CONSTRUCTION U:\tylermortenson\Documents_RevitLocalTemp\NWBLM2022_TO23_410A_arch24_tylermortenson.rvt

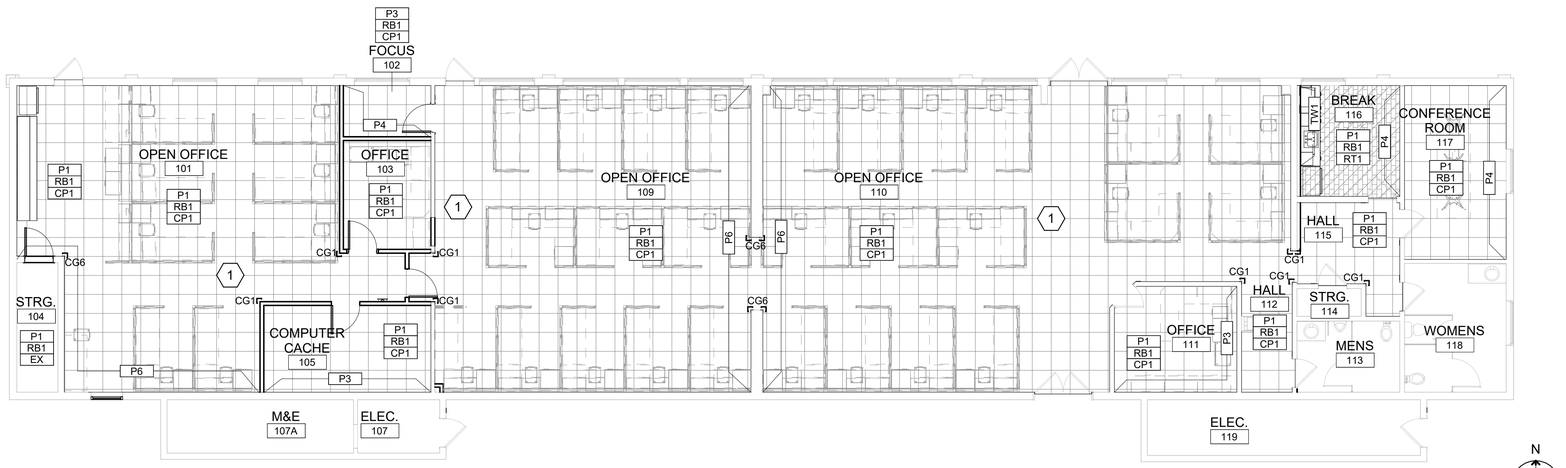

C1 FIRST FLOOR FINISH PLAN

0 4' 8' 16'

MATERIALS LIST: BASIS OF DESIGN						
ITEM NO	PRODUCT TYPE	MANUFACTURER	DESCRIPTION	COLOR	SIZE	NOTES
BASE						
RB1	RESILENT BASE	ROPPE	PINNACLE RUBBER COVED WALL BASE	110 BROWN	4" H	
CEILING						
AC1	ACOUSTIC CEILING	ARMSTRONG	FINE FISSURED SECOND LOOK	WHITE	24" X 48"	15/16" WHITE GRID
FLOOR						
CP1	CARPET	J+J FLOORING	KINETEX PUT A CORK IN IT	2197 DRUM	24" X 24"	MONOLITHIC INSTALLATION
RT1	RESILIENT FLOORING	KAHRS UPOFLOR	QUARTZ TILE LINES	8224 HYPERSTHENE ASH	12" X 24"	ASHLAR INSTALL
MILLWORK						
PL1	PLASTIC LAMINATE	FORMICA	CABINET FACES. MATTE FINISH	EARTHEN TWILL 08828-58		
SS1	SOLID SURFACE	CORIAN	SOLID SURFACE COUNTERTOP AND BACKSPLASH	PEBBLE LANE		
MISC.						
EX		EXISTING TO REMAIN				
RS1	ROLLER SHADES	HUNTER DOUGLAS	MANUAL SINGLE ROLLER SHADE 5% OPENNESS	SELECT FROM MANUFACTURER'S FULL RANGE OF COLORS		
TRANSITIONS						
TR2	TRANSITION PROFILE	FUTURA	NO-LIP RAMP/JOINTER	ETCHED ALUMINUM		WHERE CARPET MEETS RESILIENT FLOORING
WALL						
P1	PAINT	SHERWIN WILLIAMS PROMAR 200 ZERO VOC	GENERAL WALL PAINT	PACER WHITE SW 6098		LOW VOC. EGGHSELL FINISH
P2	PAINT	SHERWIN WILLIAMS	TRIM PAINT	DARK CLOVE SW9183		LOW VOC. SEMIGLOSS
P3	PAINT	SHERWIN WILLIAMS PROMAR 200 ZERO VOC	ACCENT WALL PAINT	AMAZING GREY SW7044		LOW VOC. EGGHSELL FINISH
P4	PAINT	SHERWIN WILLIAMS PROMAR 200 ZERO VOC	ACCENT WALL PAINT	OYSTER BAY SW 6206		LOW VOC. EGGHSELL FINISH
P6	PAINT	SHERWIN WILLIAMS PROMAR 200 ZERO VOC	ACCENT WALL PAINT	TRANQUIL AQUA SW7611		LOW VOC. EGGHSELL FINISH
TW1	TILE WALL	CROSSVILLE	SHADES 2.0 SPO	FROST SHD41. 10624SPO.	6" X 24"	BRICK INSTALL. GROUT TO BE GROUT #381 BRIGHT WHITE
WALL PROTECTION						
CG1	CORNER GUARD	CS ACROVYN	VA SERIES	PEARL #934	4' H	
CG6	CORNER GUARD	CS ACROVYN	VA SERIES	ASPEN #848	4' H	

FINISH PLAN LEGEND

NAME 101 — ROOM NAME AND NUMBER

XX### — FINISH TAG

XX### — EXTENT OF ACCENT PAINT OR WALL FINISHES

FINISH TAGS DISPLAYED IN GROUPING ON FINISH PLAN REPRESENT MAJORITY ROOM FINISH SELECTIONS. ORDER OF GROUPING DEFINED IN EXAMPLE BELOW:

XX### — MAJORITY WALL FINISH
XX### — MAJORITY BASE FINISH
XX### — MAJORITY FLOOR FINISH

L # — LOCATION AND TYPE OF CORNER GUARDS

FLOOR FINISH 'CP1'
FLOOR FINISH 'RT1'
FLOOR FINISH 'TF1'
NIC
FLOOR FINISH 'SC1'

GENERAL FINISH NOTES

A. VERIFY ALL CONDITIONS AND DIMENSIONS IN FIELD. IF MEASUREMENTS IN FIELD DEVIATE FROM THE DIMENSIONS SHOWN WITHIN THESE DOCUMENTS BY GREATER THAN 6" OR AFFECT DESIGN INTENT COORDINATE AND NOTIFY THE GOVERNMENT PRIOR TO CONTINUING WORK.
B. FIELD VERIFY ALL DIMENSIONS PRIOR TO FABRICATION.
C. ALL PRODUCTS ARE TO BE INSTALLED PER MANUFACTURER'S INSTRUCTIONS, USING MANUFACTURER'S ADHESIVES, TOOLS, AND METHODS.
D. REFER TO SPECIFICATIONS FOR ALL FINISH MATERIAL PRODUCT INFORMATION.
E. COORDINATE ALL OWNER FURNISHED EQUIPMENT, ACCESSORIES, AND FURNITURE WITH OWNER AND/OR OWNER'S VENDOR.
F. ALL FLOOR TRANSITIONS ARE TO OCCUR DIRECTLY BENEATH DOORS OR CENTERED IN OPENING UNLESS NOTED OTHERWISE.
G. ALL GYPSUM WALLS TO BE PAINTED 'P1' UNLESS OTHERWISE NOTED.
H. ALL HOLLOW METAL FRAMES TO BE PAINTED 'P2' UNLESS OTHERWISE NOTED.
I. ALL METAL ACCESS PANELS, COVER PLATES, VENTS, AND GRILLES TO BE PAINTED TO MATCH THE SURFACE IT IS LOCATED ON.
J. RS1 TO BE LOCATED AT ALL EXTERIOR WINDOWS

ALWAYS THINK SAFETY

Cushing Terrell.
cushingterrell.com
800.757.9522

NATIONAL SYSTEM OF PUBLIC LANDS U.S. DEPARTMENT OF THE INTERIOR BUREAU OF LAND MANAGEMENT

NIFC 410A - ITS LIGHTING REPLACE

NATIONAL INTERAGENCY FIRE CENTER
United States Department of the Interior Bureau of Land Management
NIFC 410A, 2133 W Robinson Rd, Boise, ID 83705

Sheet Title: FIRST FLOOR FINISH PLAN

Designed by: K. EDWARDS
Drawn by: K. FUNDERBURG
Checked by: S. ROBERTS
Approved by: SJBD

Revisions:

#	Description	Date
1	100% ISSUED FOR CONSTRUCTION	10/24/25

LICENSED ARCHITECT AR 984755
10/23/25
Scott D. Roberts
STATE OF IDAHO

BLM Project # 140L0624F0150
Project # 070117.023
Date: 10/24/2025

IN101

10/23/2025 3:15:17 PM 100% ISSUED FOR CONSTRUCTION U:\tylermortenson\Documents_RevitLocalTemp\NWBLM2022_TO23_410A_arch24_tylermortenson.rvt

C1 FIRST FLOOR SIGNAGE PLAN

0 4' 8' 16'

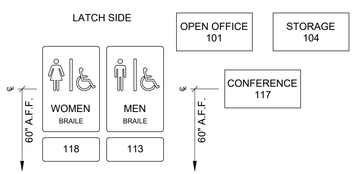

B1 ABA SIGNAGE MOUNTING HEIGHT

SIGNAGE SCHEDULE

ROOM NAME	ROOM NUMBER	SIGN TYPE	SIGN TEXT	NOTES
FIRST FLOOR				
OPEN OFFICE	101	R1	OPEN OFFICE 101	
FOCUS	102	R1	FOCUS 102	
OFFICE	103	R1	OFFICE 103	
STRG.	104	R1	UTILITY 104	
COMPUTER CACHE	105	R1	UTILITY 105	
ELEC.	107	R3	UTILITY 107	EXTERIOR SIGN TO MATCH CAMPUS STANDARDS FOR EXTERIOR PLAQUE SIGNAGE.
OFFICE	111	R1	OFFICE 111	
MENS	113	R2	MEN	
STRG.	114	R1	UTILITY 114	
BREAKROOM	116	R1	BREAKROOM 116	
CONFERENCE ROOM	117	R1	CONFERENCE 117	
WOMENS	118	R2	WOMEN	
ELEC.	119	R3	UTILITY 119	EXTERIOR SIGN TO MATCH CAMPUS STANDARDS FOR EXTERIOR PLAQUE SIGNAGE.

SIGNAGE LEGEND

R	SIGN TYPE - ROOM
000	ROOM NUMBER

ALWAYS THINK SAFETY

Cushing Terrell.
cushingterrell.com
800.757.9522

NATIONAL SYSTEM OF PUBLIC LANDS
U.S. DEPARTMENT OF THE INTERIOR
BUREAU OF LAND MANAGEMENT

NIFC 410A - ITS LIGHTING REPLACE

NATIONAL INTERAGENCY FIRE CENTER
United States Department of the Interior Bureau of Land Management
NIFC 410A, 2133 W Robinson Rd, Boise, ID 83705

Sheet Title: FIRST FLOOR SIGNAGE PLAN

Designed by: K. EDWARDS
Drawn by: K. FUNDERBURG
Checked by: S. ROBERTS
Approved by: SJBD

Revisions:

#	Description	Date
1	100% ISSUED FOR CONSTRUCTION	10/24/25

LICENSED ARCHITECT
AR 984755
10/23/25
Scott D. Roberts
STATE OF IDAHO

BLM Project # 140L0624F0150
Project # 070117.023
Date: 10/24/2025

IN102

10/23/2025 3:15:19 PM 100% ISSUED FOR CONSTRUCTION U:\tylermortenson\Documents_RevitLocalTemp\NWBLM2022_TO23_410A_arch24_tylermortenson.rvt

PLUMBING LEGEND (NOTE: NOT ALL SYMBOLS OR ABBREVIATIONS SHOWN ARE USED ON THESE DRAWINGS)					
-PIPE LINEWORK-		-GRAPHIC SYMBOLS-		-ABBREVIATIONS-	
SYMBOL	DESCRIPTION	SYMBOL	DESCRIPTION	AFF	ABOVE FINISHED FLOOR
	BREAK LINE	1	KEY NOTE	BOD	BASIS OF DESIGN
	TEE UP	1	REVISION NUMBER	DCW	DOMESTIC COLD WATER
	TEE DOWN		HATCHING INDICATES ITEM(S) TO BE REMOVED	DF	DRINKING FOUNTAIN
	ELBOW UP			DHW	DOMESTIC HOT WATER
	ELBOW DOWN			DTL	DETAIL
	PIPE CAP	N	NORTH ARROW	(E)	EXISTING
	BALL VALVE			HWR	HOT WATER RETURN
	NEW PIPING		DETAIL BUBBLE	LV	LAVATORY
	CONNECT NEW (SHADED) TO EXISTING	1 P102	DETAIL NUMBER	(N)	NEW
	LIMIT OF DEMOLITION (SHADED)		SHEET NO. - WHERE DETAIL IS SHOWN	NTS	NOT TO SCALE
DCW	DOMESTIC COLD WATER		SECTION CUT	DEMO	DEMOLITION
DHW	DOMESTIC HOT WATER	A P102	SECTION LETTER	S	SINK
DHWR	DOMESTIC HOT WATER RECIRC.		SHEET NO. - WHERE SECTION IS SHOWN	SHT	SHEET
SS	SANITARY SEWER			S.S.	SANITARY SEWER
VNT	VENT			TYP	TYPICAL
				UR	URINAL
				WC	WATER CLOSET

PLUMBING FIXTURE SCHEDULE

TYPE MARK	DESCRIPTION	BOD MANUFACTURER	FLOW RATE	CONNECTION SIZE: COLD WATER INLET	CONNECTION SIZE: HOT WATER INLET	CONNECTION SIZE: SANITARY OUTLET	CONNECTION SIZE: VENT OUTLET	COUNT	REMARKS
S-1	29" X 18" X 6" DROP IN SINK. 18 GAUGE 304 STAINLESS STEEL SATIN OR BRUSHED FINISH. 3 HOLE FAUCET CONNECTION.	ELKAY	2.2 GPM	1/2"	1/2"	1 1/2"	1 1/2"	1	PROVIDE KITCHEN FAUCET. BOD MANUFACTURER - ELKAY. THREE HOLE DECK MOUNT KITCHEN FAUCET WITH LEVER HANDLE AND DECK PLATE. CHROME FINISH.

LBYD FEDERAL, LLC
1425 Higham Street
Idaho Falls, Idaho 83402
Phone (208) 528-8718
Project No. 070117.023

LBYD FEDERAL © copyright 2023
These drawings and design intent are the sole property of LBYD FEDERAL, LLC which may not be reproduced without written permission.

GENERAL PLUMBING NOTES:

1. COORDINATE PLUMBING FIXTURES AND RELATED PIPING WITH ALL OTHER TRADES AS REQUIRED.
2. CONTRACTOR TO PROTECT AND MAINTAIN EXISTING UTILITIES AS INDICATED. REFERENCE, THE FACILITY AS BUILT AND ELECTRICAL DRAWINGS. FIELD LOCATE UNDERGROUND LINES, MARK, AND PROTECT AS NECESSARY. COORDINATE PROTECTION AND ANY AND ALL TEMPORARY DISRUPTIONS OF SERVICE WITH GOVERNMENT AS NECESSARY. PROVIDE ANY REQUIRED SHORING AND STRUCTURAL SUPPORTS OF PIPING AND CONDUITS AS REQUIRED. SCHEDULE WORK AND ANY REQUIRED INSPECTIONS TO MINIMIZE DISRUPTION OF SERVICE AS NECESSARY.
3. REFER TO ARCHITECTURAL FLOOR PLANS FOR EXACT FIXTURE LOCATIONS AND MOUNTING HEIGHTS.
4. WASTE AND DRAIN PIPING SMALLER THAN 3" SHALL BE SLOPED AT 1/4" PER FOOT. ALL WASTE AND DRAIN PIPING 3" AND LARGER SHALL BE INSTALLED AT 1/8" SLOPE PER FOOT UNLESS GREATER SLOPE IS REQUIRED BY THE LOCAL AUTHORITY HAVING JURISDICTION.
5. REFER TO PLUMBING FIXTURE SCHEDULE FOR CONNECTION SIZES. FIELD VERIFY FOR TRANSITIONS REQUIRED FOR CONNECTING TO EXISTING PIPING.
6. ALL PIPE FITTINGS AND VALVES INLINE WITH INSULATED PIPE SYSTEMS SHALL BE INSULATED.
7. LOCATE ALL SHUTOFF VALVES AND ALL OTHER OPERATIONAL VALVES FOR EASY ACCESS AND OPERATION. WHERE VALVES MUST NECESSARILY BE LOCATED IN ENCLOSED SPACES, PROVIDE ACCESS PANELS SUFFICIENTLY SIZED FOR OPERATION. PROVIDE IDENTIFICATION ON ACCESS PANELS FOR VALVE USE.
8. DRAWINGS ARE PRINTED ON ANSI D SIZE. IF DRAWINGS ARE NOT 22" X 34", USE SCALES ACCORDINGLY.

ALWAYS THINK SAFETY

NATIONAL SYSTEM OF PUBLIC LANDS
U.S. DEPARTMENT OF THE INTERIOR
BUREAU OF LAND MANAGEMENT

NIFC 410A-ITS LIGHTING REPLACE

NATIONAL INTERAGENCY FIRE CENTER
United States Department of the Interior Bureau of Land Management
3833 S. DEVELOPMENT AVE BOISE, ID 83705

Sheet Title: PLUMBING LEGEND, NOTES AND ABBREVIATIONS

Designed by: N.FRONGNER
Drawn by: N.FRONGNER
Checked by: G.TALCIK
Approved by: SJBD

Revisions:

#	Description	Date
0	100% ISSUED FOR CONSTRUCTION	10/24/25

PROFESSIONAL ENGINEER LICENSED 18674 STATE OF IDAHO NATHAN J. FRONGNER

Digitally signed by Nathan Frongner, P.E.
Date: 2025.10.22 11:55:15-06'00'

BLM Project # 140L0624F0150
Project # 070117.023
Date: 10/24/2025

P-001

10/22/2025 11:39:39 AM 100% ISSUED FOR CONSTRUCTION C:\Users\nfrongner\Documents\070117.023M_410A_R24_Central_nfrongner.rvt

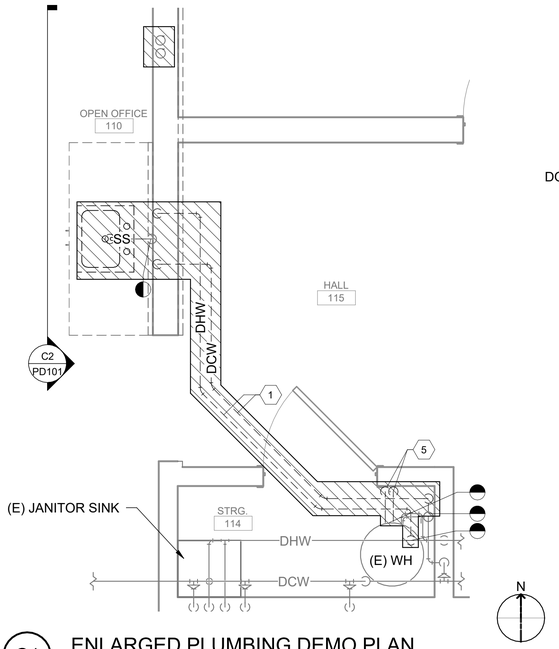

C1 ENLARGED PLUMBING DEMO PLAN

0 1' 2' 4'

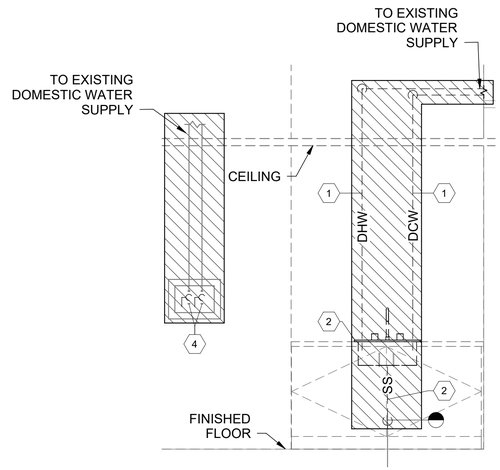

C2 PLUMBING DEMO SECTION

0 1' 2' 4'

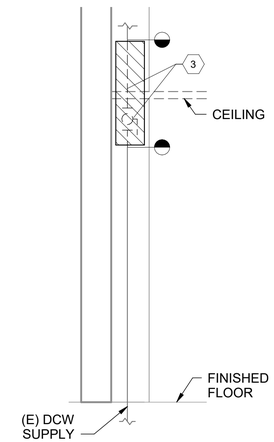

C4 PLUMBING DEMO SECTION

0 1' 2' 4'

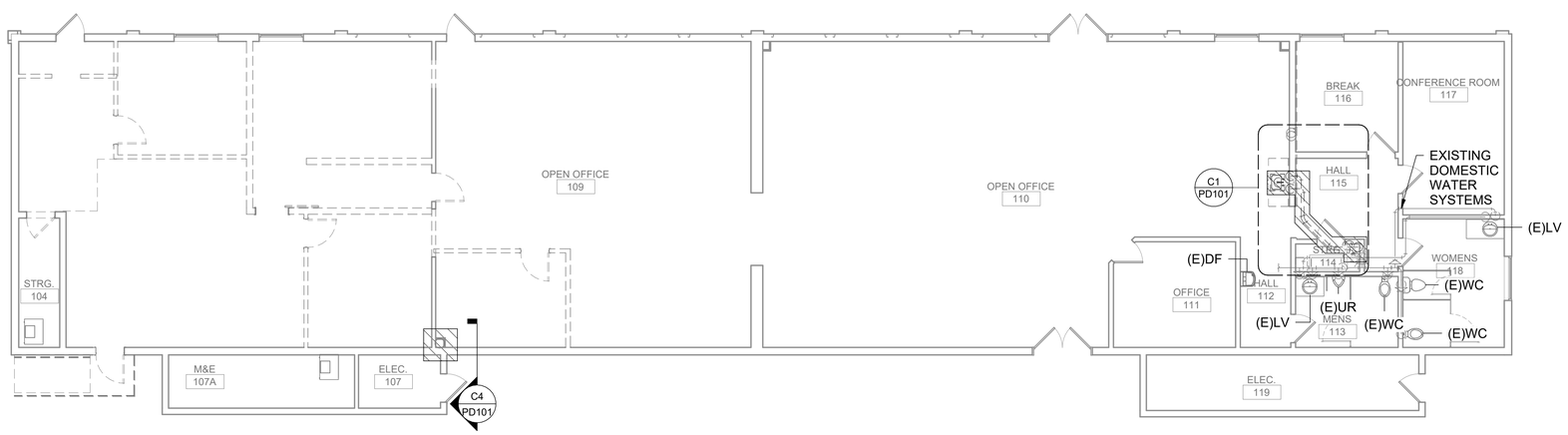

A1 FIRST FLOOR PLUMBING DEMO PLAN

0 4' 8' 16'

ALWAYS THINK SAFETY

LBYD FEDERAL, LLC
1425 Higham Street
Idaho Falls, Idaho 83402
Phone (208) 528-8718
Project No. 070117.023

LBYD FEDERAL © copyright 2023
These drawings and design intent are the sole property of LBYD FEDERAL, LLC which may not be reproduced without written permission.

GENERAL SHEET NOTES:

1. THESE DRAWINGS ARE DIAGRAMMATIC IN CHARACTER AND DO NOT NECESSARILY INDICATE EVERY REQUIRED OFFSET, FITTING, ETC.
2. FIELD VERIFY RISER LOCATIONS.
3. ENSURE WATER SERVICE HAS BEEN SHUTOFF AND THE LINES HAVE BEEN DRAINED BEFORE DEMOLITION.
4. UNLESS OTHERWISE INDICATED ON THE DRAWINGS, EXISTING PLUMBING FIXTURES AND SYSTEMS ARE TO REMAIN IN PLACE WITHOUT MODIFICATIONS.

SHEET KEYNOTES:

1. DEMOLISH THE INDICATED PEX HOT AND COLD DOMESTIC WATER LINES BACK TO THE CONNECTION POINT INTO THE EXISTING COPPER PIPING. PROVIDE TEMPORARY CAP AT THE CONNECTION POINT.
2. CUT AND CAP SANITARY SERVICE LINES. PRESERVE SANITARY DROP IN WALL FOR RECONNECTION. DEMOLISH AND REMOVE EXISTING SINK.
3. DEMOLISH INDICATED DCW PIPE SECTION AND ISOLATION VALVE. APPLY TEMPORARY COVER THE OPEN PIPES.
4. DEMOLISH INDICATED VALVES IN WALL AND DECORATIVE SURROUND. TRACE AND DEMOLISH LINES BACK TO BRANCH CONNECTIONS. TOUCH UP AND REPAIR WALL TO MATCH EXISTING.
5. DEMOLISH WATER HEATER PRESSURE RELIEF AND OVERFLOW COPPER DRAIN LINES.

NATIONAL SYSTEM OF PUBLIC LANDS
U.S. DEPARTMENT OF THE INTERIOR
BUREAU OF LAND MANAGEMENT

NIFC 410A-ITS LIGHTING REPLACE

NATIONAL INTERAGENCY FIRE CENTER
United States Department of the Interior Bureau of Land Management

3833 S. DEVELOPMENT AVE BOISE, ID 83705

Sheet Title:
FIRST FLOOR DEMOLITION PLUMBING PLAN

Designed by: N.FRONGNER
Drawn by: N.FRONGNER
Checked by: G.TALCIK
Approved by: SJBD

Revisions:

#	Description	Date
0	100% ISSUED FOR CONSTRUCTION	10/24/25

PROFESSIONAL ENGINEER LICENSED 18674 STATE OF IDAHO NATHAN J. FRONGNER

Digitally signed by Nathan Frongner, P.E.
Date: 2025.10.22 11:55:21-06'00'

BLM Project # 140L0624F0150

Project # 070117.023

Date: 10/24/2025

PD101

Sheet 14 of 28

10/22/2025 11:39:41 AM 100% ISSUED FOR CONSTRUCTION C:\Users\nfrongner\Documents\070117.023M_410A_R24_Central_nfrongner.rvt

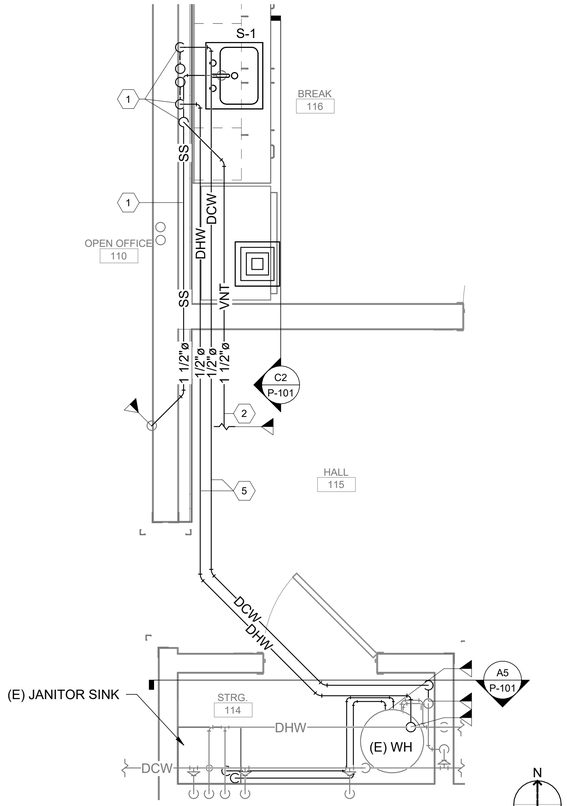

B1 ENLARGED PLUMBING PLAN

0 1' 2' 4'

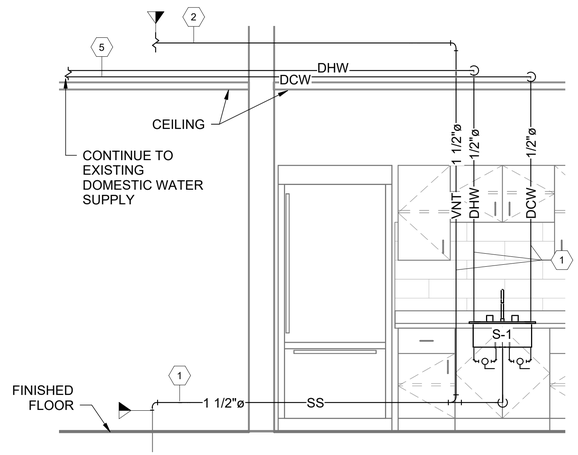

C2 PLUMBING SECTION

0 1' 2' 4'

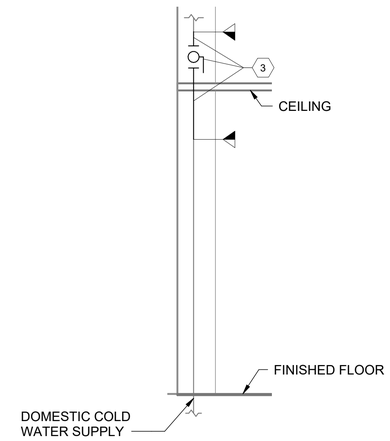

C4 PLUMBING SECTION

0 1' 2' 4'

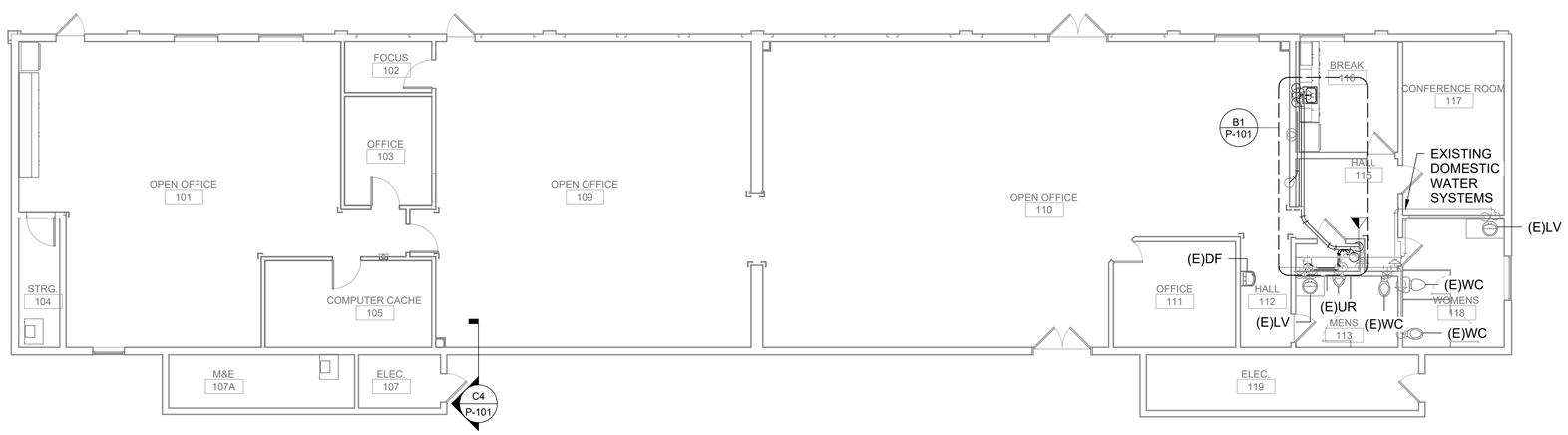

A1 FIRST FLOOR PLUMBING PLAN

0 4' 8' 16'

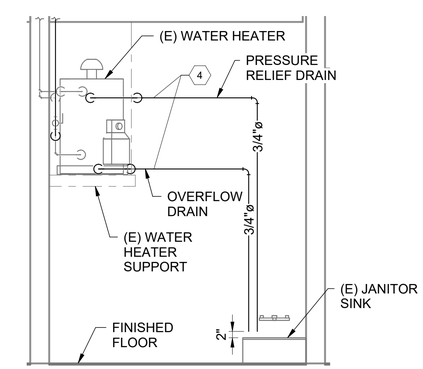

A5 PLUMBING SECTION

0 1' 2' 4'

ALWAYS THINK SAFETY

LBYD FEDERAL, LLC
1425 Higham Street
Idaho Falls, Idaho 83402
Phone (208) 528-8718
Project No. 070117.023

LBYD FEDERAL © copyright 2023
These drawings and design intent are the sole property of LBYD FEDERAL, LLC which may not be reproduced without written permission.

GENERAL SHEET NOTES:

1. THESE DRAWINGS ARE DIAGRAMMATIC IN CHARACTER AND DO NOT NECESSARILY INDICATE EVERY REQUIRED OFFSET, FITTING, ETC.
2. FIELD VERIFY RISER LOCATIONS.
3. UNLESS OTHERWISE INDICATED ON THE DRAWINGS, EXISTING PLUMBING FIXTURES AND SYSTEMS ARE TO REMAIN IN PLACE WITHOUT MODIFICATIONS.

SHEET KEYNOTES:

1. ROUTE NEW SANITARY AND VENT LINES AND RISERS FOR NEW SINK IN NEW FURRED WALL.
2. ROUTE AND CONNECT NEW VENT LINE TO EXISTING VENT SYSTEM, OR VENT THROUGH ROOF. CONTRACTOR SHALL OFFSET ALL VENTS THRU ROOF AS REQUIRED TO MAINTAIN 10 FOOT MINIMUM SEPARATION FROM ROOF TOP UNIT CURB AND ALL INTAKE LOCATIONS.
3. INSTALL NEW ISOLATION VALVE IN DCW LINE AND RECONNECT LINES. LOCATED VALVE MINIMUM 9" ABOVE THE NEW DROP CEILING. INSULATION AND FINISH OF THE PIPE TO MATCH THE EXISTING PIPE.
4. INSTALL NEW PRESSURE RELIEF AND OVERFLOW DRAIN LINES FOR THE EXISTING WATER HEATER USING DOMESTIC WATER COPPER PIPE PER SPEC 221116. ROUTE LINES ALONG THE PLAN SOUTH WALL OF STRG. ROOM 114 AND DOWN TO THE JANITOR SINK ON FLOOR. HORIZONTAL RUNS SHALL BE SLOPED PER THE PLUMBING GENERAL NOTES. PROVIDE 2" AIR GAP FROM THE DRAIN LINE OPENING TO THE TOP OF THE JANITOR SINK.
5. ROUTE NEW COPPER PIPING FOR THE NEW HOT AND COLD DOMESTIC WATER LINES. CONNECT THE EXISTING DOMESTIC WATER SYSTEM FROM THE EXISTING CONNECTION POINTS CAPPED DURING DEMOLITION TO THE NEW SINK IN THE BREAK ROOM.

NATIONAL SYSTEM OF PUBLIC LANDS
U.S. DEPARTMENT OF THE INTERIOR
BUREAU OF LAND MANAGEMENT

NIFC 410A-ITS LIGHTING REPLACE

NATIONAL INTERAGENCY FIRE CENTER
United States Department of the Interior Bureau of Land Management

3833 S. DEVELOPMENT AVE BOISE, ID 83705

Sheet Title: FIRST FLOOR PLUMBING PLAN

Designed by: N.FRONGNER
Drawn by: N.FRONGNER
Checked by: G.TALCIK
Approved by: SJBD

Revisions:

#	Description	Date
0	100% ISSUED FOR CONSTRUCTION	10/24/25

PROFESSIONAL ENGINEER LICENSED 18674 STATE OF IDAHO NATHAN J. FRONGNER

Digitally signed by Nathan Frongner, P.E.
Date: 2025.10.22 11:55:26-06'00'

BLM Project # 140L0624F0150

Project # 070117.023

Date: 10/24/2025

P-101

Sheet 15 of 28

10/22/2025 11:39:43 AM 100% ISSUED FOR CONSTRUCTION C:\Users\nfrongner\Documents\070117.023M_410A_R24_Central_nfrongner.rvt

(NOTE: NOT ALL SYMBOLS OR ABBREVIATIONS SHOWN ARE USED ON THESE DRAWINGS)

DUCTWORK SYMBOLS

SYMBOL	DESCRIPTION
	SUPPLY DUCT CROSS SECTION
	RETURN DUCT CROSS SECTION
	EXHAUST DUCT CROSS SECTION
	ROUND SUPPLY DUCT CROSS SECTION
	ROUND RETURN DUCT CROSS SECTION
	ROUND EXHAUST DUCT CROSS SECTION
	MANUAL VOLUME DAMPER
	MOTOR OPERATED CONTROL DAMPER
BDD BDD	BACKFLOW DRAFT DAMPER
	CONICAL FITTING WITH DAMPER
	SQUARE ELBOW WITH TURNING VANES
	SQUARE ELBOW WITHOUT TURNING VANES
	RADIUS ELBOW
	SUPPLY DIFFUSER, RECTANGULAR (OMIT FLOW ARROWS WHEN FLOW DIRECTION IS NOT CONTROLLED)
	SUPPLY DIFFUSER, ROUND (OMIT FLOW ARROWS WHEN FLOW DIRECTION IS NOT CONTROLLED)
	RETURN AIR GRILLE
	EXHAUST AIR GRILLE
	FLEXDUCT
	DUCTWORK REDUCER
	DIRECTION OF FLOW
12X20	INSIDE DUCT SIZE (FIRST DIMENSION IS THE DIMENSION IN VIEW)
10"X8"	ONE-LINE DUCT SIZE
	EXISTING DUCT TO BE REMOVED
	LIMIT OF DEMOLITION (SHADED SIDE AND HATCHED)
	CONNECT NEW DUCT (SHADED SIDE) TO EXISTING DUCT
R	DUCT RISE
D	DUCT DROP
XX	HVAC SENSOR/CONTROLLER TAG

HVAC SENSOR/CONTROLLER TAG
REPLACE "XX" WITH INDICATED

CC	HVAC CENTRAL CONTROLLER
CO	CARBON MONOXIDE DETECTOR
HS	HUMIDISTAT
LT	LEVEL TRANSMITTER
M	MOTOR
MS	MANUAL SWITCH
NO2	NITROGEN DIOXIDE DETECTOR
PIT	PRESSURE INDICATING TRANSMITTER
PS	PRESSURE SWITCH
OS	OCCUPANCY SENSOR
T	THERMOSTAT / THERMOMETER

	ALARM
	FORCE AIR FLOW
	FREE FLOW AIR
	BREAK LINE
	THERMOSTAT CONTROL WIRING

-GRAPHIC SYMBOLS-

SYMBOL	DESCRIPTION
1	KEY NOTE
1	REVISION NUMBER
EF-1	EQUIPMENT TAG
	HATCHING INDICATES ITEM(S) TO BE REMOVED

DETAIL BUBBLE
1 — DETAIL NUMBER
M102 — SHEET NO. - WHERE SECTION IS SHOWN

SECTION CUT
A — SECTION LETTER
M102 — SHEET NO. - WHERE SECTION IS SHOWN

DIFFUSER TAG
SD1 — XX#
250 — AIR FLOW RATE IN CFM (CFM OMITTED FOR RETURN AND TRANSFER GRILLES)
SD - SUPPLY DIFFUSER
EG - EXHAUST GRILLE
RG - RETURN GRILLE
TG - TRANSFER GRILLE NUMBER

DRAWING VIEW AREA
VIEW NUMBER — A1
VIEW TITLE — TITLE
NORTH ARROW — N
GRAPHIC SCALE — 0 8' 16' 32'

MECHANICAL ABBREVIATIONS

ABBREV	DESCRIPTION
---- A ----	
A	AREA
A/C	AIR CONDITION
ACU	AIR-CONDITIONING UNIT
AD	ACCESS DOOR
AFF	ABOVE FINISHED FLOOR
AHP	AIR HORSEPOWER
AHU	AIR-HANDLING UNIT
AMP	AMPERE
ANSI	AMERICAN NATIONAL STANDARD INSTITUTE
AP	ACCESS PANEL
APPROX	APPROXIMATE
ASHRAE	AMERICAN SOCIETY OF HEATING, REFRIGERATION, AND AIR CONDITIONING ENGINEERS
ASME	AMERICAN SOCIETY OF MECHANICAL ENGINEERS
AVG	AVERAGE
---- B ----	
BARO PR	PRESSURE, BAROMETRIC
BAS	BUILDING AUTOMATION SYSTEM
BHP	BRAKE HORSEPOWER
BTU	BRITISH THERMAL UNIT
---- C ----	
C/C	CENTER TO CENTER
CAP	CAPACITY
CCW	COUNTERCLOCKWISE
CFM	CUBIC FEET PER MINUTE
CLG LOAD	COOLING LOAD
COND	CONDENSER
COP	COEFFICIENT OF PERFORMANCE
CU FT	CUBIC FEET
CU IN	CUBIC INCH
CW	CLOCKWISE
°C	CELCIUS
---- D ----	
DB	DECIBEL
DBT	DRY-BULB TEMPERATURE
DC	DIRECT CURRENT
DEG/°	DEGREE
DIA/Ø	DIAMETER
DPT	DEW-POINT TEMPERATURE
DWG	DRAWING/DRAWINGS
DX	DIRECT EXPANSION
---- E ----	
EA	EXHAUST AIR
EAT	ENTERING AIR TEMPERATURE
EER/ EER2	ENERGY EFFICIENCY RATIO RATING
EFF	EFFICIENCY
ESP	EXTERNAL STATIC PRESSURE
EVAP	EVAPORATE
(E)	EXISTING
---- F ----	
FA	FRESH AIR
FP	FREEZING POINT
FPM	FEET PER MINUTE
FPS	FEET PER SECOND
FT	FOOT/FEET
FT LB	FOOT-POUND
°F	FAHRENHEIT

MECHANICAL ABBREVIATIONS

ABBREV	DESCRIPTION
---- G ----	
GA	GAGE OR GAUGE
GAL	GALLONS
GPD	GALLONS PER DAY
GPH	GALLONS PER HOUR
GPM	GALLONS PER MINUTE
GR	GRAINS
---- H ----	
HD	HEAD
HGT	HEIGHT
HP	HEAT PUMP
HP	HORSEPOWER
HR	HOUR(S)
HSPF/ HSPF2	HEATING SEASONAL PERFORMANCE FACTOR
HVAC	HEATING, VENTILATION, AND AIR CONDITIONING
HZ	FREQUENCY
---- I ----	
ID	DIAMETER, INSIDE
IEER/ IEER2	INTEGRATED ENERGY EFFICIENCY RATIO RATING
in.	INCH
ISP	INTERNATIONAL PIPE STD
---- J ----	
---- K ----	
K	THERMAL CONDUCTIVITY
kW	KILOWATT
kWH	KILOWATT HOUR
---- L ----	
LAT	LEAVING AIR TEMPERATURE
LBS	POUNDS
LF	LINEAR FEET
LG	LENGTH
LH	LATENT HEAT
LHG	LATENT HEAT GAIN
LPS	LOW-PRESSURE SYSTEM (SWITCH)
---- M ----	
MAX	MAXIMUM
MBH/ MBTU	1000 BRITISH THERMAL UNITS PER HOUR
MCA	MINIMUM CIRCUIT AMPACITY
MECH	MECHANICAL
MIN	MINIMUM
MOCP	MAXIMUM OVER CURRENT PROTECTION
MPH	MILES PER HOUR
---- N ----	
N/A	NOT APPLICABLE
NC	NOISE CRITERIA
NC	NORMALLY CLOSED
NEC	NATIONAL ELECTRIC CODE
NFPA	NATIONAL FIRE PROTECTION ASSOCIATION
NO	NORMALLY OPEN
NOM	NORMAL
NTS	NOT TO SCALE
---- O ----	
OA	OUTSIDE AIR
OAT	OUTSIDE AIR TEMPERATURE
OC	ON CENTER
OD	DIAMETER, OUTSIDE
OZ	OUNCE

MECHANICAL ABBREVIATIONS

ABBREV	DESCRIPTION
---- P ----	
PCT/%	PERCENT
PD WB	PRESSURE DROP OR DIFFERENCE
PH	PHASE
POC	POINT OF CONNECTION
PPM	PARTS PER MILLION
PSF	POUNDS PER SQUARE FOOT
PSF A	PSF ABSOLUTE
PSF G	PSF GAGE
PSI	POUNDS PER SQUARE INCH
PSIA	PSI ABSOLUTE
PSIG	PSI GAGE
---- Q ----	
---- R ----	
R	THERMAL RESISTANCE
RA	RETURN AIR
RAT	RETURN AIR TEMPERATURE
RECIRC	RECIRCULATE
REF	REFRIGERANT
REV	REVOLUTIONS
RH	RELATIVE HUMIDITY
RPM	REVOLUTIONS PER MINUTE
RPS	REVOLUTIONS PER SECOND
°R	RANKINE
---- S ----	
S	SECOND
SA	SUPPLY AIR
SAT	SATURATION
SCFM	CFM, STANDARD CONDITIONS
SCFS	CUBIC FT PER SEC, STANDARD
SCH	SCHEDULE
SEER/ SEER2	SEASONAL ENERGY EFFICIENCY RATIO RATING
SH	SENSIBLE HEAT
SHG	SENSIBLE HEAT GAIN
SHR	SENSIBLE HEAT RATIO
SMACNA	SHEET METAL AND AIR CONDITIONING CONTRACTORS' NATIONAL ASSOCIATION
SP	STATIC PRESSURE
SP HT	SPECIFIC HEAT
SP VOL	SPECIFIC VOLUME
SPEC	SPECIFICATION
SQ	SQUARE
STD	STANDARD
---- T ----	
TAB	TEST AND BALANCE
TD	TEMPERATURE DIFFERENCE
TEMP	TEMPERATURE
TONS	TONS OF REFRIGERATION
TSH	TOTAL SENSIBLE HEAT
TSP	TOTAL STATIC PRESSURE
TSTAT	THERMOSTAT
TYP	TYPICAL
---- U ----	
U	HEAT TRANSFER COEFFICIENT
---- V ----	

MECHANICAL ABBREVIATIONS

ABBREV	DESCRIPTION
V	VALVE
V	VOLT
VA	VOLT AMPERE
VAP PR	PRESSURE, VAPOR
VAR	VARIABLE
VAV	VARIABLE AIR VOLUME
VEL	VELOCITY
VENT	VENTILATION, VENT
VERT	VERTICAL
VOL	VOLUME
VP	PRESSURE, DYNAMIC (VELOCITY)
VVT	VARIABLE VOLUME AND TEMPERATURE
---- W ----	
W	WATT
W/	WITH
WB	WET BULB
WBT	WET-BULB TEMPERATURE
WC	WALL CAP
WH	WATT-HOUR
WT	WEIGHT
---- X ----	
---- Y ----	
YR	YEAR
---- Z ----	
Z	ZONE

LBYD FEDERAL, LLC
1425 Higham Street
Idaho Falls, Idaho 83402
Phone (208) 528-8718
Project No. 070117.023

© copyright 2023
These drawings and design intent are the sole property of LBYD FEDERAL, LLC which may not be reproduced without written permission.

GENERAL MECHANICAL NOTES:

1. THESE DRAWINGS ARE DIAGRAMMATIC IN CHARACTER AND DO NOT NECESSARILY INDICATE EVERY REQUIRED OFFSET, FITTING, ETC. THE CONTRACTOR SHALL PROVIDE COMPLETE AND OPTIMALLY OPERATING MECHANICAL SYSTEMS IN COMPLIANCE WITH APPLICABLE CODES AND INDUSTRY STANDARDS.
2. SEE M501 DRAWING SHEET FOR INSTALLATION DETAILS.
3. ALL WORK SHALL COMPLY WITH THE 2021 INTERNATIONAL MECHANICAL CODE, NFPA REQUIREMENTS, AND ALL APPLICABLE LOCAL AND FEDERAL CODES.
4. ALL MEDIUM PRESSURE SUPPLY DUCTWORK SHALL BE FABRICATED AND INSTALLED IN ACCORDANCE WITH THE LATEST SMACNA HVAC CONSTRUCTION MANUAL FOR 4" W.G. STATIC PRESSURE CLASSIFICATION.
5. WHERE BRANCH TAPS OCCUR, PROVIDE SHOE FITTINGS WITH INDIVIDUAL DAMPERS FOR BALANCING.
6. DUCT SIZES SHOWN ON DRAWINGS ARE INSIDE CLEAR DIMENSIONS. WHERE DUCT LINER IS INSTALLED, INCREASE DUCT SIZE TO PROVIDE INSIDE CLEAR DIMENSIONS SHOWN ON DRAWINGS. EXPOSED DUCT LINER SHALL NOT BE USED.
7. TO THE EXTENT POSSIBLE, PROVIDE MINIMUM 6 INCH CLEARANCE BETWEEN MECHANICAL EQUIPMENT IN THE CEILING AND OTHER EQUIPMENT, STRUCTURAL, BUILDING COMPONENTS, ETC.
8. DRAWINGS ARE PRINTED IN ANSI D SIZE. IF DRAWINGS ARE NOT 22" X 34", USE SCALE ACCORDINGLY.
9. REFER TO ARCHITECTURAL PLANS FOR EXACT LOCATION OF CEILING DIFFUSERS/GRILLES.
10. DUCT LAYOUT SHOWN SHALL BE MODIFIED AS REQUIRED TO CONFORM TO ACTUAL CONDITIONS. COORDINATE DUCT INSTALLATION WITH STRUCTURE, LIGHTING, OTHER TRADES, ETC.
11. ALL EXISTING CONDITIONS AS INDICATED ARE APPROXIMATIONS OF ACTUAL CONDITIONS. VERIFY ALL DIMENSIONS AND EXISTING CONDITIONS PRIOR TO STARTING WORK.
12. WHEREVER EXISTING SYSTEMS ARE ALTERED, EXTENDED, OR PARTS THERE OF ABANDONED, MAINTAIN, IN GOOD OPERATING CONDITION, THE INTEGRITY OF THE REMAINING SYSTEM, OR PARTS THEREOF.
13. COORDINATE ALL MECHANICAL WORK & EQUIPMENT WITH STRUCTURAL MEMBERS, ELECTRICAL WORK AND FIXTURES, ALL OTHER TRADES AND ALL EXISTING CONDITIONS.

ALWAYS THINK SAFETY

NATIONAL SYSTEM OF PUBLIC LANDS
U.S. DEPARTMENT OF THE INTERIOR
BUREAU OF LAND MANAGEMENT

NIFC 410A-ITS LIGHTING REPLACE

NATIONAL INTERAGENCY FIRE CENTER
United States Department of the Interior Bureau of Land Management

3833 S. DEVELOPMENT AVE BOISE, ID 83705

Sheet Title: MECHANICAL LEGEND, NOTES AND ABBREVIATIONS

Designed by: N.FRONGNER
Drawn by: N.FRONGNER
Checked by: G.TALCIK
Approved by: SJBD

Revisions:

#	Description	Date
0	100% ISSUED FOR CONSTRUCTION	10/24/25

PROFESSIONAL ENGINEER LICENSED 18674 STATE OF IDAHO NATHAN J. FRONGNER
Digitally signed by Nathan Frongner, P.E.
Date: 2025.10.22 11:55:31-06'00'

BLM Project # 140L0624F0150
Project # 070117.023
Date: 10/24/2025

M-001

10/22/2025 11:39:45 AM 100% ISSUED FOR CONSTRUCTION C:\Users\nfrongner\Documents\070117.023M_410A_R24_Central_nfrongner.rvt

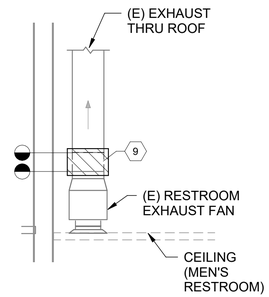

C4 MECHANICAL DEMO SECTION

0 1' 2' 4'

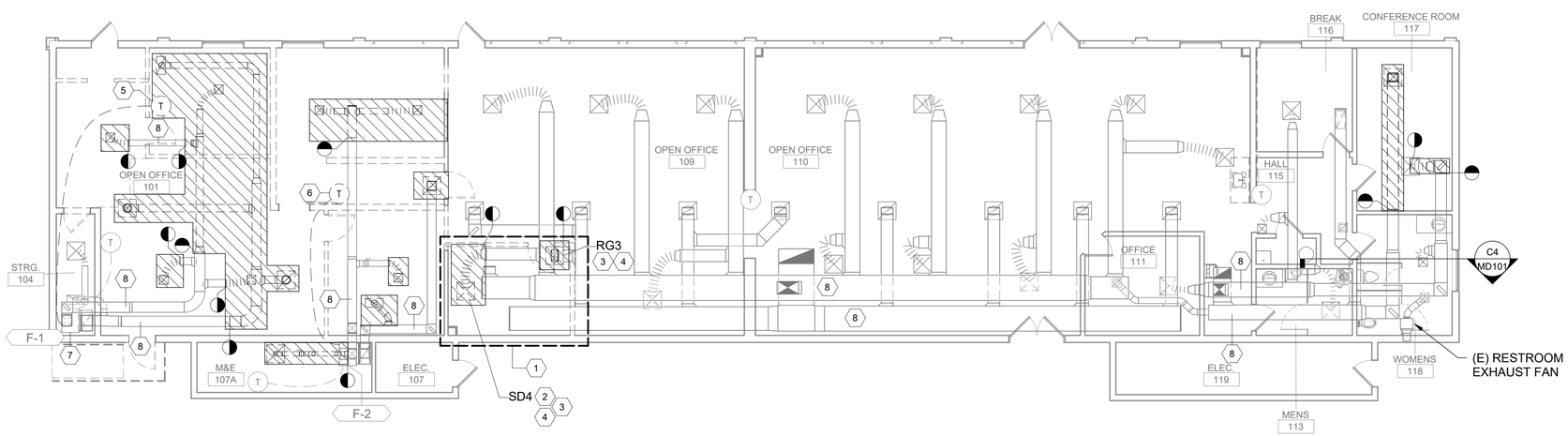

A1 FIRST FLOOR DEMOLITION MECHANICAL PLAN

N

0 4' 8' 16'

ALWAYS THINK SAFETY

LBYD FEDERAL, LLC
1425 Higham Street
Idaho Falls, Idaho 83402
Phone (208) 528-8718
Project No. 070117.023

LBYD FEDERAL © copyright 2023
These drawings and design intent are the sole property of LBYD FEDERAL, LLC which may not be reproduced without written permission.

GENERAL SHEET NOTES:

1. ALL EXISTING CONDITIONS AS INDICATED ARE APPROXIMATIONS OF ACTUAL CONDITIONS. VERIFY ALL DIMENSIONS AND EXISTING CONDITIONS PRIOR TO STARTING WORK.
2. WHEREVER EXISTING SYSTEMS ARE ALTERED, EXTENDED, OR PARTS THEREOF ABANDONED, MAINTAIN, IN GOOD OPERATING CONDITION, THE INTEGRITY OF THE REMAINING SYSTEM, OR PARTS THEREOF.
3. COORDINATE ALL MECHANICAL WORK & EQUIPMENT WITH STRUCTURAL MEMBERS, ELECTRICAL WORK AND FIXTURES, ALL OTHER TRADES AND ALL EXISTING CONDITIONS.
4. VERIFY EXISTING REFLECTED CEILING PLANS IN THE FIELD FOR EXACT LAYOUT LOCATION OF ALL CEILING GRILLES & DIFFUSERS, COORDINATE LAYOUT WITH ALL OTHER TRADES.
5. CLEAN AND REPAIR EXISTING DUCT SYSTEM PER SPEC SECTION 230130.52.
6. PROVIDE PRE-TAB SERVICE PRIOR TO DEMOLITION WORK TO RECORD AIRFLOW VALUES FOR DIFFUSERS AND BATHROOM EXHAUST FANS FOR POST CONSTRUCTION TAB WORK.

SHEET KEYNOTES:

1. INDICATED AREA REQUIRES REMOVAL OF CEILING DIFFUSERS AND GRILLES WITH DEMOLITION OF THE CEILING GRID PER ARCH DRAWING SHEET AD102 REFLECTED CEILING PLAN. COORDINATE LOCALIZED CEILING GRID DEMOLITION WITH OTHER DISCIPLINES.
2. PERFORM TAB AIR FLOW TESTS ON INDICATED DIFFUSERS TO BE REMOVED/RELOCATED. RECORD MEASURED AIR FLOW AS DATA SETPOINTS FOR TAB WORK AT THE END OF CONSTRUCTION. SEE SPECIFICATION SECTION 230593.
3. RECORD LOCATION OF EACH GRILLE, DIFFUSER, AND REGISTER REMOVED DURING DEMOLITION FOR FUTURE INSTALLATION. RECORD POSITION OF ALL REMOVED DAMPERS FOR INITIAL POSITIONING OF TAB PROCEDURES.
4. CAREFULLY REMOVE, REHABILITATE, AND STORE GRILLES, DIFFUSERS, AND REGISTERS TO FACILITATE THE INSTALLATION OF THE NEW LIGHTING AND CEILING GRID CONFIGURATION.
5. DEMOLISH THE INDICATED THERMOSTAT, AND RETURN DEMOLISHED THERMOSTAT TO GOVERNMENT FOR REUSE/DISPOSITION.
6. DEMOLISH THE INDICATED THERMOSTAT, AND SALVAGE FOR REINSTALLATION IN THE NEW FLOOR CONFIGURATION.
7. UPDATE F-1 THERMOSTAT CONNECTIONS FROM AVERAGE OF TWO THERMOSTATS TO CONTROL FROM ONE THERMOSTAT.
8. CLEAN AND REPAIR INDICATED DUCT SYSTEMS PER SPECIFICATION 230130.52.
9. DEMOLISH DUCT SECTION FOR INSTALLATION OF A BACKDRAFT DAMPER SIZED TO MATCH EXISTING MEN'S RESTROOM EXHAUST DUCT SYSTEM.

NATIONAL SYSTEM OF PUBLIC LANDS · U.S. DEPARTMENT OF THE INTERIOR · BUREAU OF LAND MANAGEMENT

NIFC 410A-ITS LIGHTING REPLACE

NATIONAL INTERAGENCY FIRE CENTER
United States Department of the Interior Bureau of Land Management

3833 S. DEVELOPMENT AVE BOISE, ID 83705

Sheet Title: FIRST FLOOR DEMOLITION MECHANICAL PLAN

Designed by: N.FRONGNER
Drawn by: N.FRONGNER
Checked by: G.TALCIK
Approved by: SJBD

Revisions:

#	Description	Date
0	100% ISSUED FOR CONSTRUCTION	10/24/25

PROFESSIONAL ENGINEER LICENSED 18674 STATE OF IDAHO NATHAN J. FRONGNER

Digitally signed by Nathan Frongner, P.E.
Date: 2025.10.22 11:55:35-06'00'

BLM Project # 140L0624F0150

Project # 070117.023

Date: 10/24/2025

MD101

Sheet 17 of 28

10/22/2025 11:39:47 AM 100% ISSUED FOR CONSTRUCTION C:\Users\nfrongner\Documents\070117.023M_410A_R24_Central_nfrongner.rvt

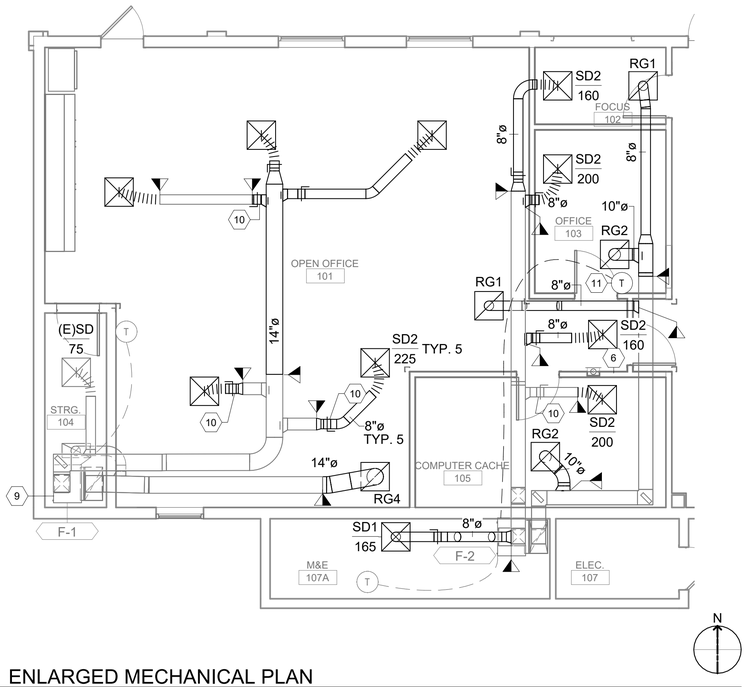

C1 ENLARGED MECHANICAL PLAN

0 2' 4' 8' 12'

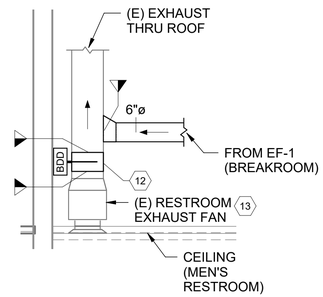

C3 MECHANICAL SECTION

0 1' 2' 4'

AIR TERMINAL SCHEDULE

MARK	SYSTEM TYPE	MOUNT	FACE SIZE	CONNECTION	COLOR	REMARKS
RG1	RETURN	LAY IN	24"x24"	8"ø	WHITE	
RG2	RETURN	LAY IN	24"x24"	10"ø	WHITE	
RG3	RETURN	LAY IN	24"x24"	12"ø	WHITE	1,2
RG4	RETURN	LAY IN	24"x24"	14"ø	WHITE	
SD1	SUPPLY	DUCT MOUNT	24"x24"	8"ø	WHITE	3
SD2	SUPPLY	LAY IN	24"x24"	8"ø	WHITE	
SD3	SUPPLY	LAY IN	24"x24"	10"ø	WHITE	
SD4	SUPPLY	LAY IN	24"x24"	12"ø	WHITE	1,2

AIR TERMINAL SCHEDULE NOTES:
1. VERIFY EXISTING CONNECTION SIZE AT DEMOLITION, REINSTALL SIZE TO MATCH EXISTING CONNECTION SIZE.
2. EXISTING GRILLE, REGISTER, OR DIFFUSER SHALL BE INSTALLED AS INDICATED ON THE DRAWING WITH (E).
3. DIFFUSER FOR COOLING ONLY AND SHALL SEAL SHUT WHEN FURNACE IS IN HEATING.

FAN SCHEDULE

MARK	EXHAUST (CFM)	POWER					REMARKS
		V	PH	HZ	MCA	MOCP	
EF-1	50	115	1	60	0.2	15	1,2,3

FAN SCHEDULE NOTES:
1. BASIS OF DESIGN: GREENHECK SP SERIES FAN.
2. INCLUDE OCCUPANCY SENSOR FOR FAN ACTIVATION. FAN TO SHUT OFF AFTER 5 MINUTES OF INACTIVITY WITH THE OCCUPANCY SENSOR.
3. INCLUDE BACKDRAFT DAMPER ON EXHAUST FAN.

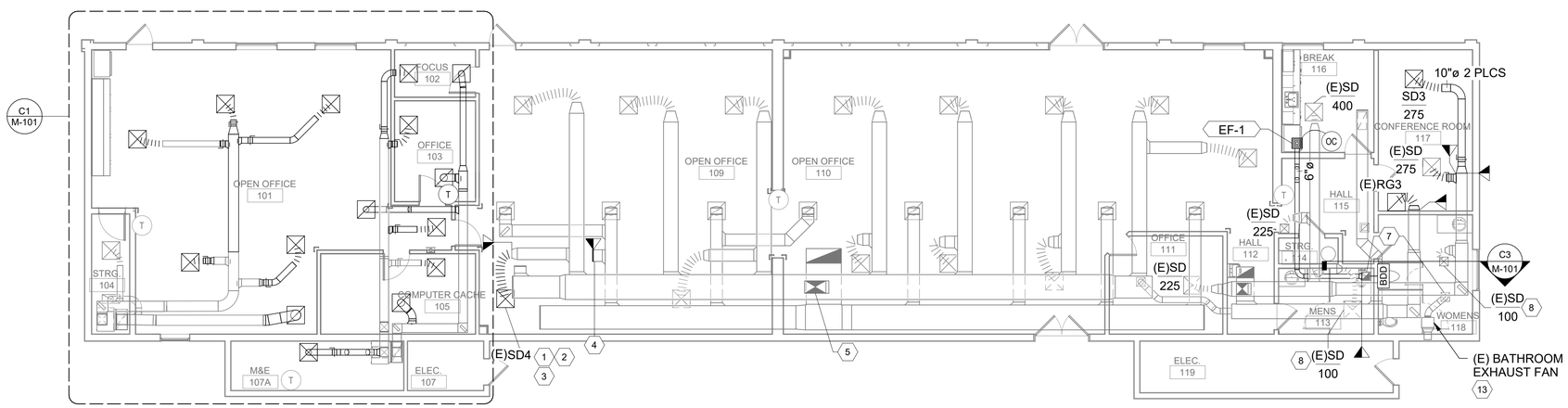

A1 FIRST FLOOR MECHANICAL PLAN

0 4' 8' 16'

ALWAYS THINK SAFETY

LBYD FEDERAL, LLC
1425 Higham Street
Idaho Falls, Idaho 83402
Phone (208) 528-8718
Project No. 070117.023

© copyright 2023
These drawings and design intent are the sole property of LBYD FEDERAL, LLC which may not be reproduced without written permission.

GENERAL SHEET NOTES:

1. ALL EXISTING CONDITIONS AS INDICATED ARE APPROXIMATIONS OF ACTUAL CONDITIONS. VERIFY ALL DIMENSIONS AND EXISTING CONDITIONS PRIOR TO STARTING WORK.
2. WHEREVER EXISTING SYSTEMS ARE ALTERED, EXTENDED, OR PARTS THEREOF ABANDONED, MAINTAIN, IN GOOD OPERATING CONDITION, THE INTEGRITY OF THE REMAINING SYSTEM, OR PARTS THEREOF.
3. COORDINATE ALL MECHANICAL WORK & EQUIPMENT WITH STRUCTURAL MEMBERS, ELECTRICAL WORK AND FIXTURES, ALL OTHER TRADES AND ALL EXISTING CONDITIONS.
4. VERIFY EXISTING REFLECTED CEILING PLANS IN THE FIELD FOR EXACT LAYOUT LOCATION OF ALL CEILING GRILLES & DIFFUSERS, COORDINATE LAYOUT WITH ALL OTHER TRADES.
5. TAB HVAC SYSTEMS PER SPEC SECTION 230593.

SHEET KEYNOTES:

1. REINSTALL REMOVED GRILLES, DIFFUSERS, AND REGISTERS TO FACILITATE THE INSTALLATION OF THE NEW LIGHTING AND CEILING GRID CONFIGURATION.
2. MODIFY OR REPLACE EXISTING FLEX DUCT AND INSULATION PER SPEC SECTIONS 233346 AND 230713 TO RECONNECT GRILLES, DIFFUSERS, AND REGISTERS TO EXISTING DUCT WORK.
3. TAB INDICATED DIFFUSERS TO MATCH THE RECORDED AIR FLOW SETPOINT MEASURED AT PRE-CONSTRUCTION PER SPECIFICATION SECTION 230593.
4. PROVIDE A SHEET METAL CAP ON THE ABANDONED RETURN BRANCH LINE PER SMACNA AND SPECIFICATION SECTION 233113.
5. ADJUST OUTSIDE AIR INTAKE OF THE INDICATED ROOFTOP UNIT SYSTEM TO ACCOUNT FOR THE NEW OCCUPANCY LOAD PER ASHRAE 62.1 - 2019. OUTSIDE AIR SETPOINT SHALL BE A MINIMUM OF 430 CFM.
6. REINSTALL SALVAGED THERMOSTAT AND RECONNECT AS SECOND THERMOSTAT TO F-2.
7. MEASURE AIR FLOW IN CFM OF EACH RESTROOM EXHAUST FAN.
8. TAB SUPPLY DAMPERS TO TAGGED VALUES TO BALANCE SYSTEM. AFTER BALANCED, IF EXHAUST RATE OF THE RESTROOM FANS IS LESS THAN THE SUPPLY DIFFUSER FLOW RATE, REDUCE THE SUPPLY DIFFUSER FLOW RATES OF THE RESTROOMS IT IS 25 CFM LESS THAN THE EXHAUST FLOW RATE.
9. UPDATE F-1 THERMOSTAT CONNECTIONS FROM AVERAGE OF TWO THERMOSTATS TO CONTROL FROM ONE THERMOSTAT.
10. PROVIDE INLINE MANUAL DAMPER WHERE INDICATED IF NOT PRESENT IN THE EXISTING DUCTWORK BRANCH.
11. INSTALL SALVAGED THERMOSTAT.
12. INSTALL BACKDRAFT DAMPER IN THE MEN'S RESTROOM EXHAUST DUCT UPSTREAM OF NEW EXHAUST CONNECTION FROM THE BREAK ROOM FAN.
13. CONNECT THE RESTROOM FANS TO BUILDING'S BAS. FANS TO ACTIVATE REMAIN ON DURING THE BUILDING'S OCCUPANCY CYCLE. FANS TO DEACTIVATE AND REMAIN OFF DURING THE UNOCCUPANCY CYCLE.

NATIONAL SYSTEM OF PUBLIC LANDS
U.S. DEPARTMENT OF THE INTERIOR
BUREAU OF LAND MANAGEMENT

NIFC 410A-ITS LIGHTING REPLACE

NATIONAL INTERAGENCY FIRE CENTER
United States Department of the Interior Bureau of Land Management
3833 S. DEVELOPMENT AVE BOISE, ID 83705

Sheet Title: FIRST FLOOR MECHANICAL PLAN

Designed by: N.FRONGNER
Drawn by: N.FRONGNER
Checked by: G.TALCIK
Approved by: SJBD

Revisions:

#	Description	Date
0	100% ISSUED FOR CONSTRUCTION	10/24/25

PROFESSIONAL ENGINEER LICENSED 18674 STATE OF IDAHO NATHAN J. FRONGNER

Digitally signed by Nathan Frongner, P.E.
Date: 2025.10.22 11:55:41-06'00'

BLM Project # 140L0624F0150
Project # 070117.023
Date: 10/24/2025

M-101

10/22/2025 11:39:50 AM 100% ISSUED FOR CONSTRUCTION C:\Users\nfrongner\Documents\070117.023M_410A_R24_Central_nfrongner.rvt

MINIMUM SIZE DUCT HANGERS										
MAX 1/2 DUCT PERIMETER	PAIR AT 10' SPACING		PAIR AT 8' SPACING		PAIR AT 5' SPACING		PAIR AT 4' SPACING		SINGLE HANGER MAX LOAD	
	STRAP	WIRE /ROD	STRAP	WIRE /ROD	STRAP	WIRE /ROD	STRAP	WIRE /ROD	STRAP	WIRE/ROD
P/2 = 30"	1"x 22ga	10 ga	1"x 22ga	10 ga	1"x 22ga	12 ga	1"x 22ga	12 ga	1"x 22ga 260 lbs	12ga - 80 lbs
P/2 = 72"	1"x 18ga	3/8"	1"x 20ga	1/4"	1"x 22ga	1/4"	1"x 22ga	1/4"	1"x 20ga 320 lbs	10ga - 125 lbs
P/2 = 96"	1"x 16ga	3/8"	1"x 18ga	3/8"	1"x 20ga	3/8"	1"x 22ga	1/4"	1"x 18ga 420 lbs	1/4"- 270 lbs
P/2 = 120"	1 1/2"x 16ga	1/2"	1"x 16ga	3/8"	1"x 18ga	3/8"	1"x 22ga	1/4"	1"x 16ga 700 lbs	3/8"- 680 lbs
P/2 = 168"	1 1/2"x 16ga	1/2"	1 1/2"x 16ga	1/2"	1"x 16ga	3/8"	1"x 22ga	3/8"	1 1/2"x 16ga 1100 lbs	1/2"- 1250 lbs
P/2 = 192"	N/A	1/2"	1 1/2"x 16ga	1/2"	1"x 16ga	3/8"	1"x 22ga	3/8"	1"x 22ga 260 lbs	5/8"- 2000 lbs
P/2 = 193" AND UP	SPECIAL ANALYSIS REQUIRED									3/4"- 3000 lbs

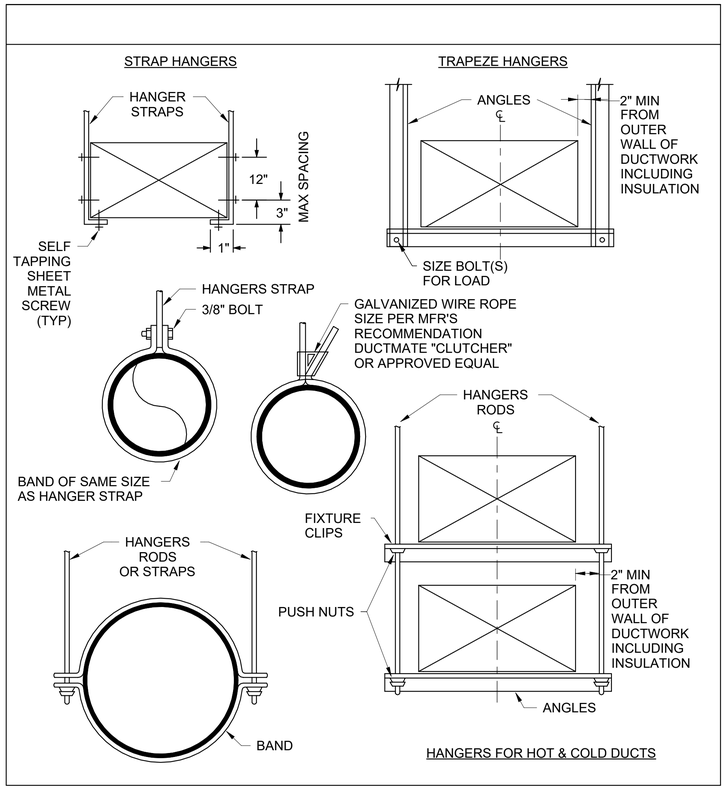

HANGERS FOR HOT & COLD DUCTS

MAXIMUM ALLOWABLE LOADS FOR TRAPEZE BARS											
LENGTH	1x1x16ga	1x1x1/8	1 1/2x1 1/2x16ga	1 1/2x1 1/2x1/8	1 1/2x1 1/2x3/16	1 1/2x1 1/2x1/4	2x2x1/8	2x2x3/16	2x2x1/4	2 1/2x2 1/2x3/16	2 1/2x2 1/2x1/4
24"	75	150	180	350	510	650	650	940	1230	1500	1960
30"	70	150	180	350	510	650	650	940	1230	1500	1960
36"	60	130	160	340	500	620	620	920	1200	1480	1940
42"	40	110	140	320	480	610	610	900	1190	1470	1930
48"	-	80	110	290	450	580	580	870	1160	1440	1900
54"	-	-	-	250	400	540	540	840	1120	1400	1860
60"	-	-	-	190	350	490	490	780	1060	1340	1800
72"	-	-	-	-	190	320	320	620	900	1180	1640
84"	-	-	-	-	-	-	-	380	660	940	1400
96"	-	-	-	-	-	-	-	-	320	600	1060

NOTES:
1. SECURE SUPPORT TO STRUCTURE ABOVE AS RECOMMENDED BY SMACNA AND THE IMC.
2. FOLLOW MSS SP-58 FOR SELECTION, MATERIALS, AND FABRICATION OF SUPPORTS. TRAPEZE HANGERS SHALL BE TYPE 59, SHOP- OR FIELD-FABRICATED PIPE-SUPPORT ASSEMBLY MADE FROM STRUCTURAL CARBON-STEEL SHAPES WITH MSS SP-58 CARBON-STEEL HANGER RODS, NUTS, SADDLES, AND U-BOLTS
3. ALL SUPPORT MATERIALS SHALL BE COMPATIBLE WITH SYSTEM MATERIALS.
4. IF DUCT SUPPORT IS DIRECT CONTACT DUCTWORK THAT REQUIRES INSULATION, APPLY INSULATION TO THE SUPPORT WHEN THE SUPPORT IS IN CONTACT WITH THE DUCTWORK AND APPLY INSULATION THE SUPPORT A MINIMUM DISTANCE OF 6" AWAY FROM CONNECTION POINT TO THE DUCTWORK.

A1 HANGERS FOR DUCTS

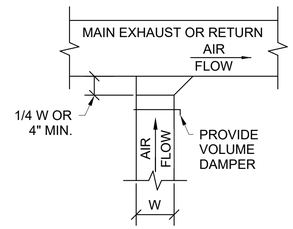

C3 EXHAUST OR RETURN BRANCH

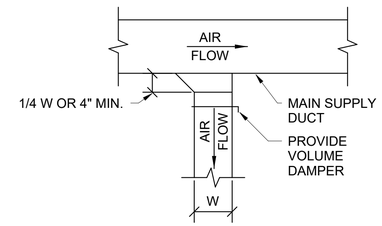

NOTES:
1. USE THE TAKEOFF DETAILS AS DISPLAYED ON THE HVAC DUCTWORK PLAN VIEWS.

C4 SUPPLY DUCT TAKEOFFS

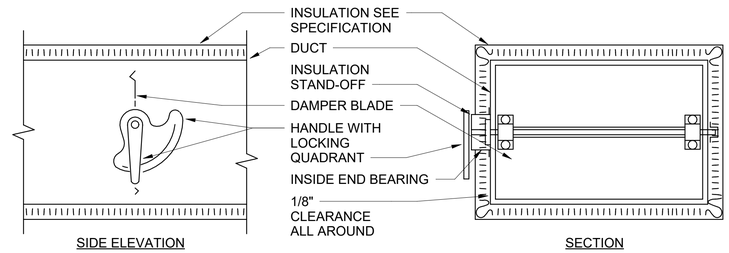

NOTES:
1. DELETE INSULATION STAND-OFF ON DUCTWORK WITHOUT EXTERIOR INSULATION.
2. DETAIL SHOWS SINGLE BLADE DAMPER. DAMPER INSTALLATION SHALL BE SIMILAR FOR MULTI-BLADE DAMPERS & ROUND DAMPERS.

B3 VOLUME DAMPER DETAIL

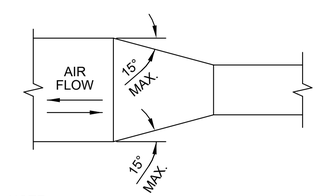

NOTE:
UNLESS OTHERWISE INDICATED ON PLANS, MAXIMUM ANGLES SHOWN SHALL APPLY.

B5 DUCTWORK TRANSITIONS

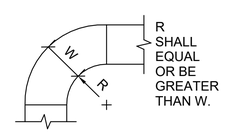

STANDARD RADIUS OR LONG RADIUS ELBOW

NOTES:
1. THE INTERIOR SURFACE OF ALL RADIUS ELBOWS SHALL BE MADE ROUND.

A3 DUCTWORK RADIUS ELBOWS

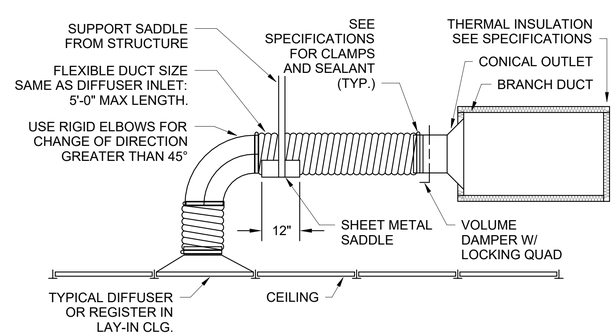

A4 FLEXIBLE AIR DUCT CONNECTOR

ALWAYS THINK SAFETY

LBYD FEDERAL, LLC
1425 Higham Street
Idaho Falls, Idaho 83402
Phone (208) 528-8718
Project No. 070117.023

LBYD FEDERAL © copyright 2023
These drawings and design intent are the sole property of LBYD FEDERAL, LLC which may not be reproduced without written permission.

NIFC 410A-ITS LIGHTING REPLACE

NATIONAL INTERAGENCY FIRE CENTER
United States Department of the Interior Bureau of Land Management

3833 S. DEVELOPMENT AVE BOISE, ID 83705

Sheet Title: MECHANICAL DETAILS

Designed by: N.FRONGNER
Drawn by: N.FRONGNER
Checked by: G.TALCIK
Approved by: SJBD

Revisions:

#	Description	Date
0	100% ISSUED FOR CONSTRUCTION	10/24/25

PROFESSIONAL ENGINEER LICENSED 18674 STATE OF IDAHO NATHAN J. FRONGNER

Digitally signed by Nathan Frongner, P.E.
Date: 2025.10.22 11:55:46-06'00'

BLM Project # 140L0624F0150

Project # 070117.023

Date: 10/24/2025

M-501

10/22/2025 11:39:51 AM 100% ISSUED FOR CONSTRUCTION C:\Users\nfrongner\Documents\070117.023M_410A_R24_Central_nfrongner.rvt

ELECTRICAL LEGEND

(NOTE: NOT ALL SYMBOLS OR ABBREVIATIONS SHOWN ARE USED ON THESE DRAWINGS)

-ONE LINE SYMBOLS-

SYMBOL	DESCRIPTION
	CIRCUIT BREAKER
	CONTROL FUSE
	FUSED SWITCH
	SWITCH
PANEL	PANELBOARD
MTS-XX XXX A	MANUAL TRANSFER SWITCH
100A4G	FEEDER DESIGNATION, SEE FEEDER SCHEDULE
TX-XXX	TRANSFORMER
47,000 AIC X	AVAILABLE FAULT CURRENT
M	MOTOR

-GENERAL-

SYMBOL	DESCRIPTION
	BRANCH CIRCUIT HOME RUN TO PANELBOARD, DESIGNATION INDICATES PANEL AND CIRCUIT NUMBERS
	CONTROL WIRING
	LIGHTING, ONE-LINE, AND POWER CIRCUITING
	LIGHTING, ONE-LINE, AND POWER CIRCUITING (UNDERGROUND)
	CONDUIT BREAK SYMBOL
	CONNECT NEW (SHADED SIDE) TO EXISTING
	LIMIT OF DEMOLITION (SHADED SIDE AND HATCHED)
	CONDUIT CAP
	CONDUIT CHANGE IN ELEVATION (DROP)
	CONDUIT STUB DOWN (OUT OF DRAWING LIMITS)
	CONDUIT STUB UP (OUT OF DRAWING LIMITS)
J	JUNCTION BOX
PP	TELE-POWER POLE
$ X #	SWITCH SYMBOL SINGLE POLE (IF BLANK) 2=DOUBLE POLE 3=THREE-WAY 4=FOUR-WAY D=DIMMER IL=ILLUMINATED LOCATOR LV=LOW VOLTAGE VS=VACANCY SENSOR WP=WEATHERPROOF X=SMALL LETTER INDICATES LUMINARIES CONTROLLED
	WELDER RECEPTACLE
	SPECIAL PURPOSE RECEPTACLE
XX	SPECIAL SYSTEMS SYMBOLS: CR= CARD READER OS= OCCUPANCY SENSOR
XXX	MISC. SYSTEM COMPONENT ACS= ACCESS CREDENTIALING SYSTEM ANN= ANNUNCIATOR CAM= CONTROL ADDRESSABLE MODULE CCR= COMMAND CARD READER FACP= FIRE ALARM CONTROL PANEL FSD= FIRE SMOKE DAMPER MAM= MONITOR ADDRESSABLE MODULE PAC= PHYSICAL ACCESS CONTROL TVSS= TRANSIENT VOLTAGE SURGE SUPPRESSOR VFD= VARIABLE FREQUENCY DRIVE
	QUADRIPLEX RECEPTACLE
X	DUPLEX RECEPTACLE GFI= GROUND FAULT CIRCUIT INTERRUPTER D= DEDICATED GROUNDED RECEPTACLE CUB= CUBICLE DUPLEX RECEPTACLE R= REFRIGERATOR RECEPTACLE WP= WEATHER PROOF
	208V, 2-POLE RECEPTACLE
	FLOOR MOUNTED DUPLEX RECEPTACLE
	FLOOR MOUNTED QUADRIPLEX RECEPTACLE
	FLOOR MOUNTED TELE/DATA RECEPTACLE
	CEILING MOUNTED DUPLEX RECEPTACLE
	CEILING MOUNTED QUADRIPLEX RECEPTACLE
	CEILING MOUNTED DATA RECEPTACLE

-POWER-

SYMBOL	DESCRIPTION
	DISCONNECT SWITCH
	FUSED DISCONNECT SWITCH
	MOTOR STARTER
	COMBINATION MOTOR STARTER
	DISTRIBUTION PANEL
	NEW PANEL, SURFACE MOUNTED
M	METER
T	TRANSFORMER
	HANDHOLE

-GROUNDING-

SYMBOL	DESCRIPTION
	GROUND TEST WELL
	GROUND ROD
	GROUNDING CONDUCTOR
	GROUND BUS
	BONDING POINT
	ELECTRICAL GROUND

-LIGHTING-

SYMBOL	DESCRIPTION
#X	LED LUMINARIES #=BRANCH CIRCUIT NUMBER X=SWITCH LEG IDENTIFIER
	SHADING INDICATES LUMINAIRE ON LIFE SAFETY
	WALL MOUNTED LUMINAIRE
OS	OCCUPANCY SENSOR
PS	PHOTOCELL FOR DAYLIGHTING
	EXIT LIGHT (WITH FACES & DIRECTION ARROWS INDICATED) WALL MOUNTED EXIT LIGHT (WITH FACES & DIRECTION ARROWS INDICATED)
	WALL MOUNTED BATTERY PACK EMERGENCY LIGHT

-TELECOM DEVICES-

SYMBOL	DESCRIPTION
	2 PORT DATA FACEPLATE (TYPICAL) MOUNTED AT +12 AFF.
	2 PORT TELE/DATA FACEPLATE (TYPICAL) MOUNTED AT +12 AFF.
WAP	CEILING MOUNTED WIRELESS ACCESS POINT
D P	CEILING MOUNTED PHOTOELECTRIC SMOKE DETECTORS
	CEILING MOUNTED HORN AND STROBE LIGHT
TV	HDMI CABLE PORT MOUNTED AT +72 AFF.
#F	CARD READER 1F = ONE FACTOR AUTHENTICATION 2F = TWO FACTOR AUTHENTICATION

-GRAPHIC SYMBOLS-

SYMBOL	DESCRIPTION
1	KEY NOTE
EF-1	EQUIPMENT TAG
	HATCHING INDICATES ITEM(S) TO BE REMOVED
N	NORTH ARROW
1 E102	DETAIL BUBBLE DETAIL NUMBER SHEET NO. - WHERE DETAIL IS SHOWN
A E102	SECTION CUT SECTION LETTER SHEET NO. - WHERE DETAIL IS SHOWN

-ABBREVIATIONS-

(E)	EXISTING	MCSW	MOLDED CASE SWITCH
(N)	NEW	MLO	MAIN LUGS ONLY
(PART)	PARTIAL CIRCUIT	MTD	MOUNTED
+XX	MOUNTING HEIGHT IN INCHES. AFF UNO	MTS	MANUAL TRANSFER SWITCH
A	AMP	N	NEUTRAL
AC	ABOVE COUNTER TOP	NC	NORMALLY CLOSED
AF	AMP FRAME	NEC	NATIONAL ELECTRIC CODE
AFC	ABOVE FINISHED COUNTER	NF	NON FUSED
AFF	ABOVE FINISHED FLOOR	NIC	NOT IN CONTRACT
AFG	ABOVE FINISHED GRADE	NL	NIGHT LIGHT
AGC	ACCESS GATE CONTROLS	NO	NORMALLY OPEN
AHJ	AUTHORITY HAVING JURISDICTION	OHP	OVERHEAD POWER
AIC	AMPS INTERRUPTING CAPACITY	P	POLE
AS	AMPS SENSOR	PB	PULL BOX
AT	AMP TRIP	PNL	PANEL
BFG	BELOW FINISHED GRADE	PWR	POWER
C	CONDUIT	RCPT	RECEPTACLE(S)
CAM	CONTROL ADDRESSABLE MODULE	SBC	STRANDED BARE COPPER
CB	MOLDED CASE CIRCUIT BREAKER	SDBTC	SOFT DRAWN BARE TINNED COPPER
CKT	CIRCUIT	SP	SPARE
CLG	CEILING	SW	SWITCH
CONT	CONTINUED	T	TRANSFORMER
CSC	CEILING SECURITY CAMERA	TC	TELECOM
EF	EXHAUST FAN	TEL	TELEPHONE
EGB	ELECTRICAL GROUND BUSBAR	TTB	TELEPHONE TERMINAL BOARD
ELEC	ELECTRIC	TV	TELEVISION
ELEV	ELEVATION	TVSS	TRANSIENT VOLTAGE SURGE SUPPRESSOR
EMERG	EMERGENCY	TYP	TYPICAL
FA	FIRE ALARM	UF	UNDERFLOOR
FACP	FIRE ALARM CONTROL PANEL	UG	UNDERGROUND
FLR	FLOOR	UGP	UNDERGROUND POWER
FLUOR	FLUORESCENT	UNO	UNLESS NOTED OTHERWISE
G	GROUND (EQUIPMENT)	UPS	UNINTERRUPTIBLE POWER SUPPLY
GEN	GENERATOR	V	VOLTAGE
GFCI	GROUND FAULT CIRCUIT INTERRUPTER	VFD	VARIABLE FREQUENCY DRIVE
GFI	GROUND FAULT CIRCUIT INTERRUPTER	WG	WIRE GUARD
GND	GROUND (EQUIPMENT)	WP	WEATHERPROOF
HP	HORSEPOWER	WSC	WALL MOUNT SECURITY CAMERA
HV	HIGH VOLTAGE	XFMR	TRANSFORMER
IC	INTERRUPTING CAPACITY		
IG	ISOLATED GROUND		
JB	JUNCTION BOX		
K	THOUSNAD		
LTG	LIGHTING		
LTP	POLE LIGHTING		
LTS	LIGHTS		
LV	LOW VOLTAGE		
MAM	MONITOR ADDRESSABLE MODULE		
MCB	MAIN CIRCUIT BREAKER		
MCM	THOUSAND CIRCULAR MILS		

LBYD FEDERAL, LLC
1425 Higham Street
Idaho Falls, Idaho 83402
Phone (208) 528-8718
Project No. 070117.023

© Copyright 2023
These drawings and design intent are the sole property of LBYD FEDERAL, LLC which may not be reproduced without written permission.

GENERAL ELECTRICAL NOTES

1. WORK SHALL BE PERFORMED IN ACCORDANCE WITH THE NATIONAL ELECTRICAL CODE 2020 EDITION, AND IBC 2021 EDITION. WORK SHALL ALSO BE IN ACCORDANCE WITH STATE AND LOCAL CODES AND ORDINANCES.
2. COMMUNICATION CABLES SHALL BE CONNECTED IN ACCORDANCE WITH ANSI/TIA-568B.
3. REFERENCE SPECIFICATIONS FOR CONSTRUCTION MATERIALS AND INSTALLATION PROCEDURES. SPECIFICATIONS ARE A PART OF THE CONSTRUCTION DOCUMENTS. SHOULD ANY CONFLICT ARISE BETWEEN THE DRAWINGS AND SPECIFICATIONS, SUCH CONFLICT SHALL BE BROUGHT TO THE ATTENTION OF THE GOVERNMENT FOR RESOLUTION.
4. THESE DRAWINGS ARE DIAGRAMMATIC IN CHARACTER AND DO NOT NECESSARILY SHOW MATERIALS FOR A COMPLETE INSTALLATION.
5. JUNCTION BOXES FOR LUMINARIES ARE NOT INDICATED HERE ON. PROVIDE THE PROPER NUMBER OF J-BOXES TO MEET LOCAL CODE AND NATIONAL ELECTRICAL CODE.
6. LIGHT SWITCHES SHALL BE MOUNTED 48 INCHES ABOVE FINISHED FLOOR TO CENTERLINE OF DEVICE, UNLESS OTHERWISE NOTED.
7. RECEPTACLES SHALL BE LOCATED 18 INCHES ABOVE THE FINISHED FLOOR TO CENTERLINE OF THE DEVICE, UNLESS OTHERWISE NOTED. ABOVE COUNTER RECEPTACLES SHALL BE MOUNTED 6 INCHES ABOVE THE BACK SPLASH TO THE CENTERLINE OF THE DEVICE.
8. WORKING CLEARANCES FOR ELECTRICAL EQUIPMENT SHALL BE IN COMPLIANCE WITH NEC.
9. ALL EQUIPMENT MOUNTED OVERHEAD OR ABOVE SUSPENDED CEILINGS WEIGHING 30 POUNDS OR MORE MUST BE SECURED TO A PERMANENT STRUCTURE BY MEANS OF HAVING SUFFICIENT CAPACITY TO RESIST HORIZONTAL FORCES OF 0.5 TIMES THE EQUIPMENT WEIGHT AND VERTICAL FORCES OF 1.5 TIMES THE EQUIPMENT WEIGHT.
10. DRAWINGS ARE PRINTED IN ANSI D SIZE. IF DRAWINGS ARE NOT 22" X 34", USE SCALES ACCORDINGLY.
11. A GREEN INSULATED COPPER GROUND CONDUCTOR SHALL BE RUN WITH ALL BRANCH CIRCUITS. NUMBER OF CURRENT CARRYING CONDUCTORS PER CONDUIT SHALL BE 6 MAXIMUM.
12. FOR 120V, 20A HOMERUN CIRCUITS THAT EXCEED 57 FEET IN FEEDER LENGTH WITH 16 AMPS LOAD, OVERSIZE CONDUCTOR TO #10 DUE TO VOLTAGE DROP. MAX BRANCH CIRCUIT VOLTAGE DROP SHALL BE 3%.
13. SHARED NEUTRALS ARE NOT ALLOWED.

ALWAYS THINK SAFETY

NATIONAL SYSTEM OF PUBLIC LANDS
U.S. DEPARTMENT OF THE INTERIOR
BUREAU OF LAND MANAGEMENT

NIFC 410A-ITS LIGHTING REPLACE

NATIONAL INTERAGENCY FIRE CENTER
United States Department of the Interior Bureau of Land Management

3833 S. DEVELOPMENT AVE BOISE, ID 83705

Sheet Title: ELECTRICAL LEGEND, NOTES, AND ABBREVIATIONS

Designed by: D. SIMS
Drawn by: D. SIMS
Checked by: M. HADDAD
Approved by: SJBD

Revisions:

#	Description	Date
0	100% ISSUED FOR CONSTRUCTION	10/24/25

PROFESSIONAL ENGINEER LICENSED 2061470 STATE OF IDAHO MARIO AL HADDAD
10-22-2025

BLM Project # 140L0624F0150
Project # 070117.023
Date: 10/24/2025

E-001

Sheet 20 of 28

10/22/2025 3:39:22 PM 100% ISSUED FOR CONSTRUCTION C:\Users\dylan.sims\Documents\070117.023E_410A_R24_Central_dsimsYNR72.rvt

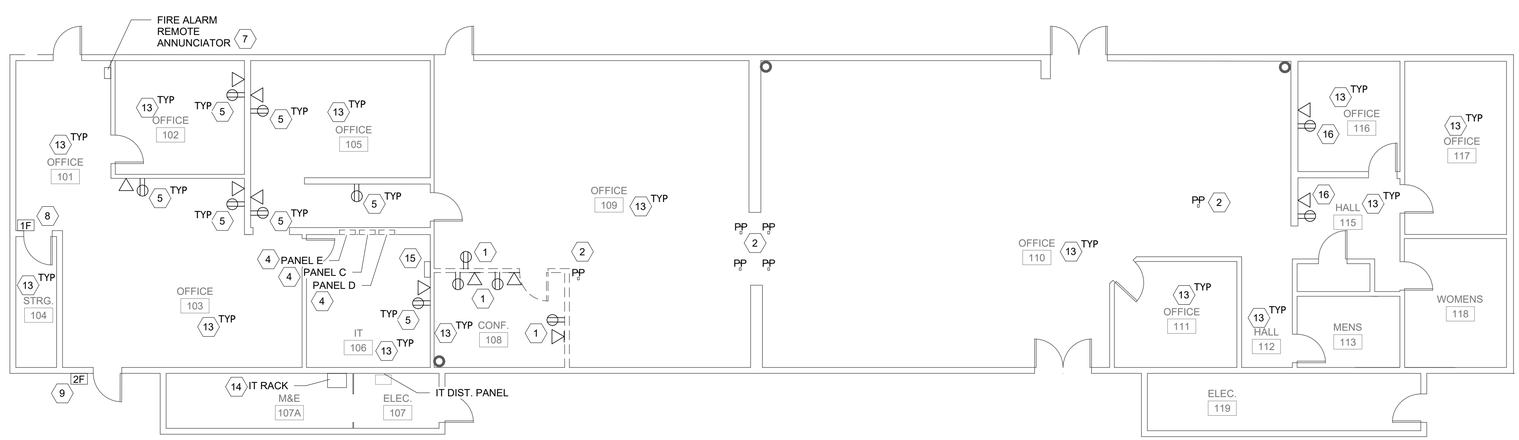

C1 FIRST FLOOR DEMOLITION POWER PLAN

0 4' 8' 16'

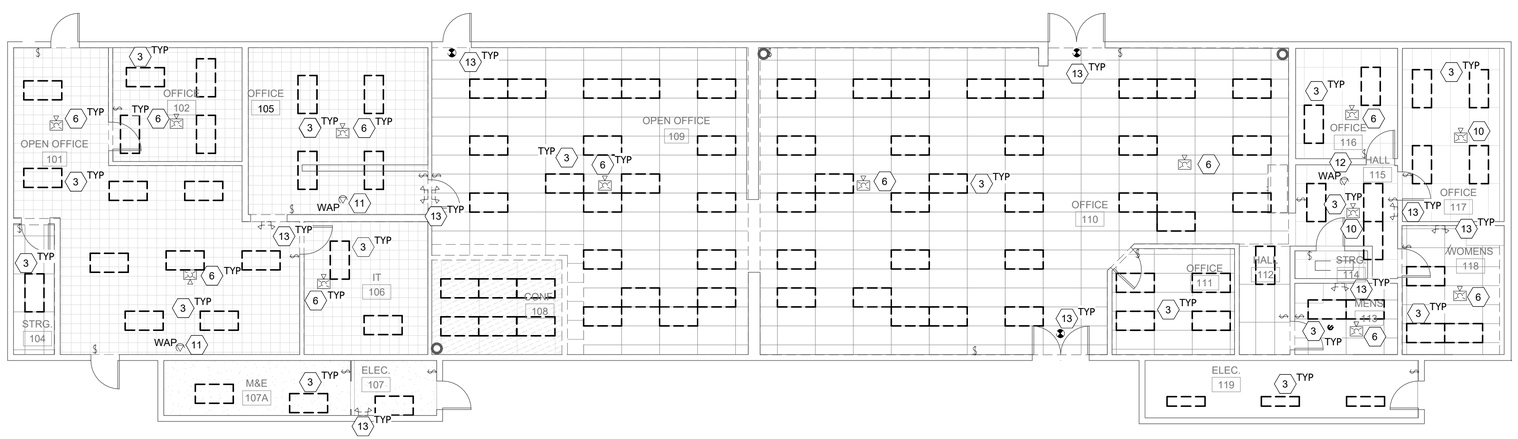

A1 FIRST FLOOR DEMOLITION LIGHTING PLAN

0 4' 8' 16'

LBYD FEDERAL, LLC
1425 Higham Street
Idaho Falls, Idaho 83402
Phone (208) 528-8718
Project No. 070117.023
© copyright 2023
These drawings and design intent are the sole property of LBYD FEDERAL, LLC which may not be reproduced without written permission.

GENERAL SHEET NOTES:

1. CONTRACTOR TO FIELD VERIFY ALL EXISTING WIRING, FIXTURES AND EQUIPMENT LOCATIONS PRIOR TO DEMOLITION AND CONSTRUCTION.
2. PROTECT ALL EXISTING ITEMS TO REMAIN. REPAIR EXISTING WIRING AS REQUIRED IF DAMAGED.
3. ANY HOLES LEFT FROM DEVICE REMOVAL SHALL BE PATCHED AND REPAIRED TO MATCH EXISTING WALL OR SURFACE
4. PROVIDE BLANK PLATES AT ALL OPEN BOXES WHERE DEVICES ARE REMOVED AND SURFACE IS NOT SCHEDULED TO BE PATCHED AND RE-FINISHED.

SHEET KEYNOTES

1. EXISTING POWER OUTLETS TO BE DEMOLISHED TO NEAREST SOURCE OR JUNCTION BOX. EXISTING DATA OUTLETS TO BE DEMOLISHED BACK TO SOURCE.
2. EXISTING POWER POLES TO BE DEMOLISHED. EXISTING POWER CIRCUITS TO BE RETAINED FOR REUSE IN NEW POWER POLES. EXISTING COMMUNICATIONS CABLES TO BE DEMOLISHED BACK TO SOURCE.
3. ALL LIGHTING AND LIGHTING CONTROLS THROUGHOUT THE ENTIRE BUILDING 410A SHALL BE DEMOLISHED. RETAIN AND PROTECT WIRING FOR NEW LED LIGHTING AND LIGHTING CONTROLS.
4. EXISTING PANELS C, D, AND E SHALL BE DISCONNECTED AND DEMOLISHED. ALL ASSOCIATED COMPONENTS SUCH AS WIRES AND CONDUIT SHALL BE PROTECTED AND EXTENDED TO NEW PANEL LOCATIONS.
5. ALL EXISTING POWER AND COMMUNICATIONS OUTLETS AND EQUIPMENT LOCATED IN ROOMS 102, 105, AND 106 SHALL BE DEMOLISHED TO NEAREST SOURCE OR JUNCTION BOX. EXISTING WALL MOUNTED CONDUIT AND JUNCTION BOXES SHALL BE REMOVED AND REROUTED TO FEED EXISTING EQUIPMENT.
6. EXISTING FIRE ALARM DEVICE SHALL BE DISCONNECTED AND RETAINED FOR REINSTALLATION.
7. EXISTING FIRE ALARM REMOTE ANNUNCIATOR SHALL BE DISCONNECTED AND RETAINED FOR REINSTALLATION IN NEW LOCATION.
8. EXISTING CARD READER SHALL BE REMOVED AND RETAINED FOR REINSTALLATION AT NEW HEIGHT ABOVE FLOOR.
9. EXISTING CARD READER SHALL BE DEMOLISHED AND BLANK OFF THE EXISTING CARD READER LOCATION. CARD READER SHALL BE REMOVED FROM PACS PROGRAMMING.
10. EXISTING FIRE ALARM DEVICE SHALL REMAIN IN PLACE SINCE CEILING IS NOT BEING REMOVED.
11. EXISTING WIRELESS ACCESS POINT SHALL BE REMOVED AND RETAINED FOR REINSTALLATION. THE EXISTING COMMUNICATIONS CABLES SHALL BE DEMOLISHED BACK TO THE SOURCE IN RM 107A.
12. EXISTING WIRELESS ACCESS POINT SHALL REMAIN AND HAVE ITS COMMUNICATIONS CABLES DEMOLISHED BACK TO THE SOURCE IN RM 107A.
13. ALL EXISTING COMMUNICATIONS CABLES SHALL BE DEMOLISHED BACK TO THE SOURCE IN RM 107A.
14. EXISTING PATCH PANELS IN IT RACK IN RM 107A SHALL BE DEMOLISHED.
15. EXISTING COMMUNICATIONS CABLE CHASE SHALL BE DEMOLISHED.
16. ALL EXISTING POWER AND COMMUNICATIONS OUTLETS LOCATED ON THE WEST WALLS OF RMS 115 AND 116 SHALL BE DEMOLISHED TO NEAREST SOURCE OR JUNCTION BOX.
17. ALL EXISTING EMEGERNCY LIGHTS AND EXITS SIGNS THROUGHOUT THE ENTIRE BUILDING 410A SHALL BE DEMOLISHED. RETAIN AND PROTECT WIRING FOR NEW EMERGENCY LIGHTS AND EXIT SIGNS.

ALWAYS THINK SAFETY

NIFC 410A-ITS LIGHTING REPLACE

NATIONAL INTERAGENCY FIRE CENTER
United States Department of the Interior Bureau of Land Management

3833 S. DEVELOPMENT AVE BOISE, ID 83705

Sheet Title: FIRST FLOOR DEMOLITION ELECTRICAL PLANS

Designed by: D. SIMS
Drawn by: D. SIMS
Checked by: M. HADDAD
Approved by: SJBD

Revisions:

#	Description	Date
0.	100% ISSUED FOR CONSTRUCTION	10/24/25

PROFESSIONAL ENGINEER LICENSED 2061470 STATE OF IDAHO MARIO AL HADDAD
10-22-2025

BLM Project # 140L0624F0150

Project # 070117.023

Date: 10/24/2025

ED101

10/22/2025 3:39:24 PM 100% ISSUED FOR CONSTRUCTION C:\Users\dylan.sims\Documents\070117.023E_410A_R24_Central_dsimsYNR72.rvt

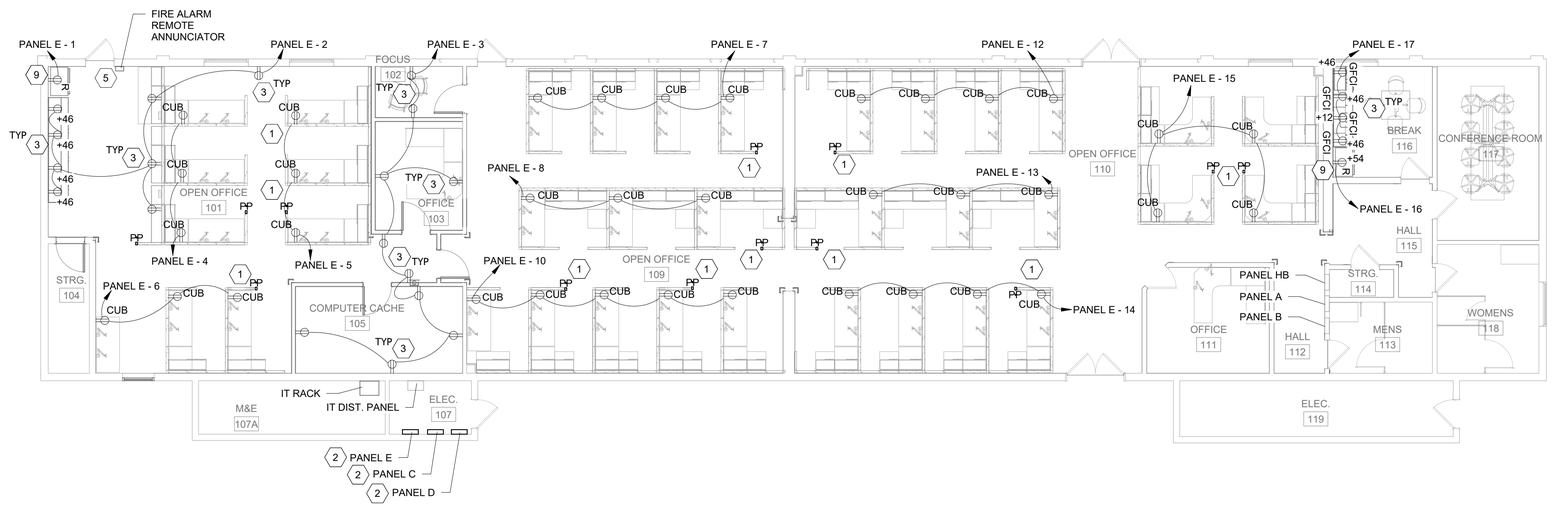

C1 FIRST FLOOR POWER PLAN

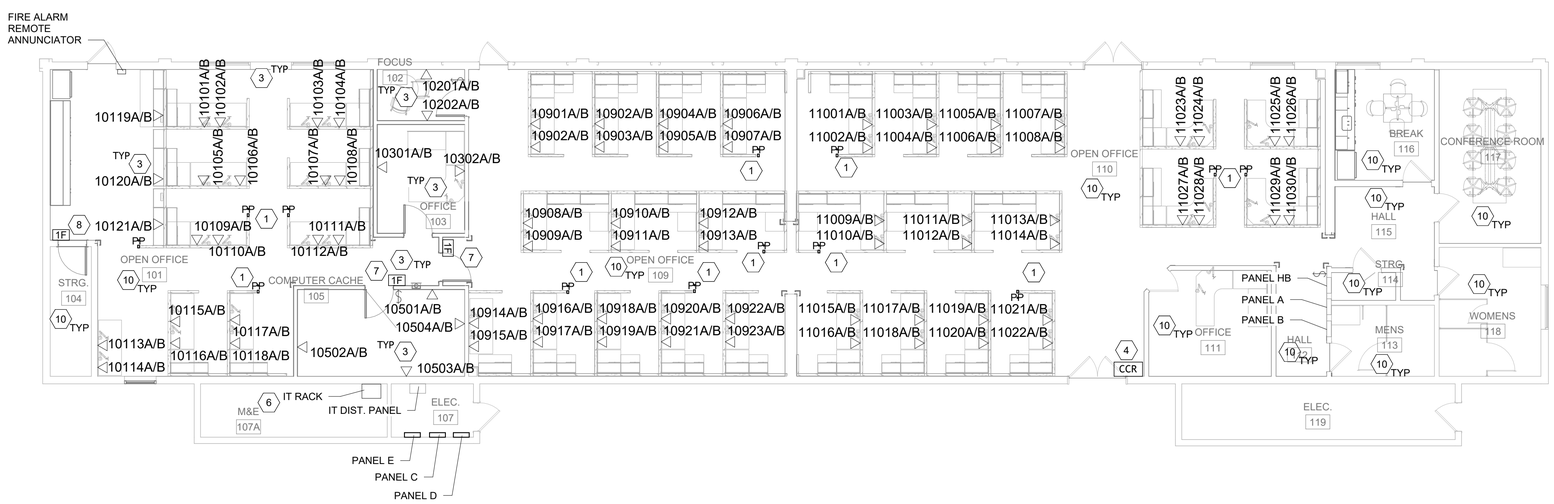

A1 FIRST FLOOR COMMUNICATIONS PLAN

LBYD FEDERAL, LLC
1425 Higham Street
Idaho Falls, Idaho 83402
Phone (208) 528-8718
Project No. 070117.023

LBYD FEDERAL © copyright 2023
These drawings and design intent are the sole property of LBYD FEDERAL, LLC which may not be reproduced without written permission.

GENERAL SHEET NOTES:

1. SEE MECHANICAL PLANS FOR EXACT LOCATIONS OF MECHANICAL EQUIPMENT. COORDINATE SERVICES TO MECHANICAL EQUIPMENT WITH FINAL FIELD CONDITIONS.
2. REFER TO LIGHTING CONTROL SEQUENCE OF OPERATIONS FOR AUTOMATIC LIGHTING CONTROL DEVICES REQUIRED AS WELL AS DESIRED SEQUENCE OF OPERATIONS OF CONTROL. PROVIDE ALL NECESSARY DEVICES AND ACCESSORIES AS REQUIRED TO PROVIDE LEVEL OF CONTROL SPECIFIED.
3. USE EXISTING CIRCUITS TO POWER LIGHTS. CONTRACTOR SHALL VERIFY EMERGENCY LIGHTS ARE ON A SEPARATE DEDICATED CIRCUIT. IF NOT, ALL EMERGENCY LIGHTS SHALL BE ON THE SAME CIRCUIT FED FROM PANEL C IN ROOM 106.

SHEET KEYNOTES

1. INSTALL NEW POWER POLES AND CONNECT POWER AND COMMUNICATIONS CABLES TO OUTLETS. POWER POLE LOCATIONS SHALL BE FIELD DETERMINED AND COORDINATED WITH FURNITURE VENDOR AND USER. EACH POWER POLE SHALL REQUIRE A JUNCTION BOX WITH ONE 20A DEDICATED CIRCUITS. MOUNT THE JUNCTION BOXES USING THE FURNITURE PLAN LAYOUT, IN AN ACCESSIBLE LOCATION, AND WITHIN 5FT OF EACH POWER POLE. ALL NEW CAT6A NETWORK PORTS SHALL BE ROUTED TO IT RACKS IN IT ROOM 107A.
2. NEW PANELS TO REPLACE THE EXISTING PANELS C, D, AND E SHALL BE INSTALLED AND RECONNECTED TO ALL EXISTING CIRCUITS AND GROUND IN NEW LOCATION IN ELECTRICAL ROOM 107. AN ARC-FLASH RISK ASSESSMENT PER NFPA 70E 130.5(A) SHALL BE PERFORMED BY A LICENSED PROFESSIONAL ENGINEER QUALIFIED IN THIS WORK. FOLLOWING THE ASSESSMENT AND BEFORE ENERGIZING, ARC-FLASH LABELING SHALL BE AFFIXED TO ALL ELECTRICAL EQUIPMENT WITH INFORMATION PER NFPA 70E 130.5(H) AND MEETING THE REQUIREMENTS OF NEC 110.16. NEW SURGE PROTECTION SHALL ALSO BE INSTALLED IN NEW PANELS.
3. INSTALL NEW POWER RECEPTACLES AND NEW COMMUNICATIONS PORTS FOR NEW ROOM LAYOUT. ALL NEW CAT6A NETWORK PORTS SHALL BE ROUTED TO IT NEW PATCH PANELS IN IT RACKS IN RM 107A.
4. INSTALL NEW COMMAND CARD READER. FINAL LOCATION TO BE COORDINATED WITH NIFC SECURITY SPECIALIST.
5. REINSTALL EXISTING FIRE ALARM REMOTE ANNUNCIATOR IN NEW LOCATION.
6. NEW CAT6A PATCH PANELS SHALL BE INSTALLED IN THE EXISTING IT RACK IN RM 107A.
7. INSTALL NEW CARD READER. DATA AND POWER FOR NEW CARD READERS SHALL BE CONNECTED TO ACCESS CONTROL SYSTEM IN M&E ROOM 107A. REFER TO DETAIL A1/E-501.
8. EXISTING CARD READER SHALL BE REINSTALLED AT NEW HEIGHT ABOVE MODIFIED FLOOR.
9. INSTALL A NEW DEDICATED GFCI BREAKER FOR REFRIGERATOR.
10. NEW CAT6A CABLES SHALL BE ROUTED FROM NEW PATCH PANELS TO ALL EXISTING COMMUNICATIONS OUTLETS AND EQUIPMENT. EXISTING CABLE TRAYS AND PATHWAYS SHALL BE REUSED. NEW CABLE TRAYS AND PATHWAYS SHALL BE INSTALLED AS NEEDED TO REFEED THE EXISTING COMMUNICATIONS EQUIPMENT.

ALWAYS THINK SAFETY

NATIONAL SYSTEM OF PUBLIC LANDS
U.S. DEPARTMENT OF THE INTERIOR BUREAU OF LAND MANAGEMENT

NIFC 410A-ITS LIGHTING REPLACE

NATIONAL INTERAGENCY FIRE CENTER
United States Department of the Interior Bureau of Land Management

3833 S. DEVELOPMENT AVE BOISE, ID 83705

Sheet Title: FIRST FLOOR ELECTRICAL PLANS

Designed by: D. SIMS
Drawn by: D. SIMS
Checked by: M. HADDAD
Approved by: SJBD

Revisions:

#	Description	Date
0.	100% ISSUED FOR CONSTRUCTION	10/24/25

PROFESSIONAL ENGINEER LICENSED 2061470 STATE OF IDAHO MARIO AL HADDAD
10-22-2025

BLM Project # 140L0624F0150
Project # 070117.023
Date: 10/24/2025

E-101

Sheet 22 of 28

10/22/2025 3:39:26 PM 100% ISSUED FOR CONSTRUCTION C:\Users\dylan.sims\Documents\070117.023E_410A_R24_Central_dsimsYNR72.rvt

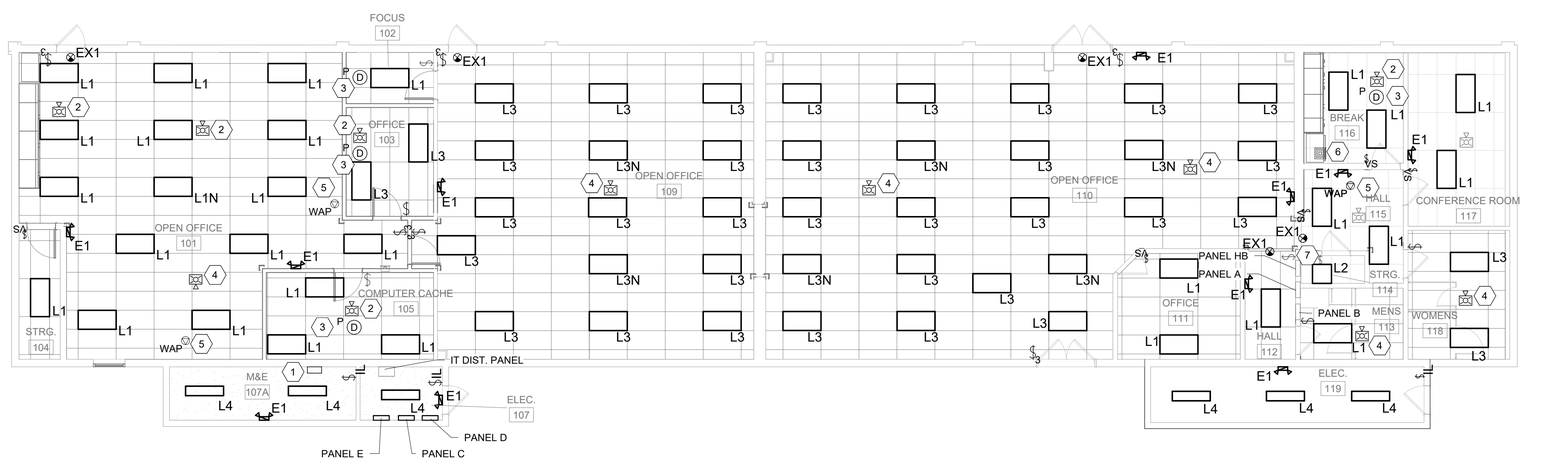

A1 FIRST FLOOR ELECTRICAL LIGHTING PLAN

LBYD FEDERAL, LLC
1425 Higham Street
Idaho Falls, Idaho 83402
Phone (208) 528-8718
Project No. 070117.023

LBYD FEDERAL © copyright 2023
These drawings and design intent are the sole property of LBYD FEDERAL, LLC which may not be reproduced without written permission.

GENERAL SHEET NOTES:

1. REFER TO LIGHTING CONTROL SEQUENCE OF OPERATIONS FOR AUTOMATIC LIGHTING CONTROL DEVICES REQUIRED AS WELL AS DESIRED SEQUENCE OF OPERATIONS OF CONTROL. PROVIDE ALL NECESSARY DEVICES AND ACCESSORIES AS REQUIRED TO PROVIDE LEVEL OF CONTROL SPECIFIED.
2. USE EXISTING CIRCUITS TO POWER LIGHTS. CONTRACTOR SHALL VERIFY EMERGENCY LIGHTS ARE ON A SEPARATE DEDICATED CIRCUIT. IF NOT, ALL EMERGENCY LIGHTS SHALL BE ON THE SAME CIRCUIT FED FROM PANEL C IN ROOM 106.

SHEET KEYNOTES

1. INSTALL NEW NEXUS RF CONTROLLER FOR EMERGENCY LIGHTS AND CONNECT INTO THE EXISTING CAMPUS NEXUS WEB BASED APPLICATION AND CONNECT TO THE EXISTING NETWORK SWITCH LOCATED IN ROOM 107A.
2. REINSTALL EXISTING FIRE ALARM DEVICE IN NEW LOCATION.
3. INSTALL NEW SMOKE DETECTOR AND CONNECT TO EXISTING FIRE ALARM SYSTEM.
4. REINSTALL EXISTING FIRE ALARM DEVICE IN EXISTING LOCATION.
5. EXISTING WIRELESS ACCESS POINTS THAT WERE REMOVED SHALL BE REINSTALLED AND REFED WITH NEW CAT6A CABLES FROM THE NEW PATCH PANELS IN THE IT RACK IN RM 107A. EXISTING WIRELESS ACCESS POINTS THAT WERE NOT REMOVED AND REINSTALLED SHALL ALSO BE REFED WITH NEW CAT6A CABLES.
6. NEW EXHAUST FAN EF-1 IN BREAK RM 116 SHALL BE CONNECTED TO THE NEAREST LIGHTING CIRCUIT.
7. INSTALL A NEW SWITCH FOR SINGLE ZONE LIGHT IN HALL 112.

ALWAYS THINK SAFETY

NATIONAL SYSTEM OF PUBLIC LANDS
U.S. DEPARTMENT OF THE INTERIOR
BUREAU OF LAND MANAGEMENT

NIFC 410A-ITS LIGHTING REPLACE

NATIONAL INTERAGENCY FIRE CENTER
United States Department of the Interior Bureau of Land Management

3833 S. DEVELOPMENT AVE BOISE, ID 83705

Sheet Title: FIRST FLOOR LIGHTING PLAN

Designed by: D. SIMS
Drawn by: D. SIMS
Checked by: M. HADDAD
Approved by: SJBD

Revisions:

#	Description	Date
0	100% ISSUED FOR CONSTRUCTION	10/24/25

PROFESSIONAL ENGINEER LICENSED 2061470 STATE OF IDAHO MARIO AL HADDAD
10-22-2025

BLM Project # 140L0624F0150
Project # 070117.023
Date: 10/24/2025

E-102

10/22/2025 3:39:27 PM 100% ISSUED FOR CONSTRUCTION C:\Users\dylan.sims\Documents\070117.023E_410A_R24_Central_dsimsYNR72.rvt

LBYD FEDERAL, LLC
1425 Higham Street
Idaho Falls, Idaho 83402
Phone (208) 528-8718
Project No. 070117.023
© copyright 2023
These drawings and design intent are the sole property of LBYD FEDERAL, LLC which may not be reproduced without written permission.

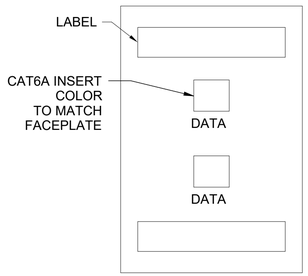

C1 2 PORT COMMUNICATION CUBICLE PLATE DETAIL

LABEL WITH BROTHER "P-TOUCH" SYSTEM. USE CLEAR OR WHITE TAPE WITH BLACK LETTERING.

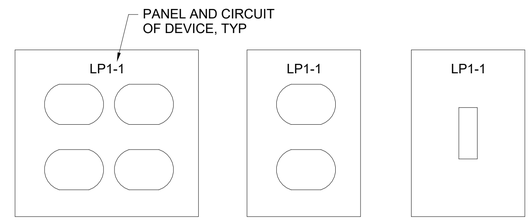

C3 DEVICE LABELING DETAIL

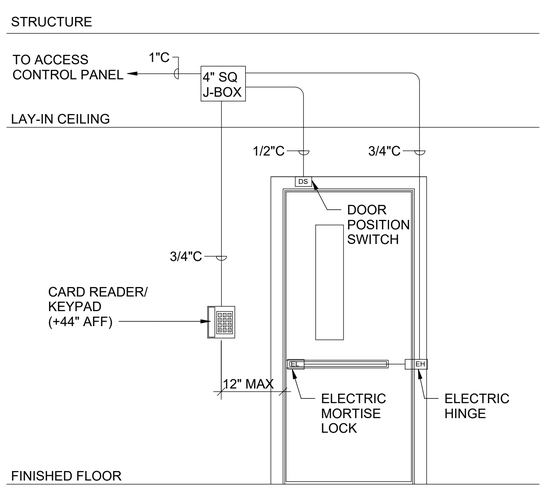

NOTES:
1. FIRE SEAL CONDUIT PENETRATION TO MAINTAIN RATING OF WALL WHERE APPLICABLE.
2. STUB OUT ALL CONDUITS AND INSTALL JUNCTION BOX ON SECURE SIDE OF DOOR WHERE APPLICABLE.

A1 ACCESS CONTROL DOOR DETAIL

ALWAYS THINK SAFETY

NIFC 410A-ITS LIGHTING REPLACE

NATIONAL INTERAGENCY FIRE CENTER
United States Department of the Interior Bureau of Land Management

3833 S. DEVELOPMENT AVE BOISE, ID 83705

Sheet Title: ELECTRICAL DETAILS

Designed by: D. SIMS
Drawn by: D. SIMS
Checked by: M. HADDAD
Approved by: SJBD

Revisions:

#	Description	Date
0.	100% ISSUED FOR CONSTRUCTION	10/24/25

PROFESSIONAL ENGINEER LICENSED 2061470 STATE OF IDAHO MARIO AL HADDAD
10-22-2025

BLM Project # 140L0624F0150
Project # 070117.023
Date: 10/24/2025

E-501

10/22/2025 3:39:28 PM 100% ISSUED FOR CONSTRUCTION C:\Users\dylan.sims\Documents\070117.023E_410A_R24_Central_dsimsYNR72.rvt

LIGHTING FIXTURE SCHEDULE									
TYPE	DESCRIPTION	LUMENS	WATTS	COLOR TEMP	CRI	MOUNT TYPE	MOUNTING HEIGHT	BASIS OF DESIGN	
L1	2X4 RECESSED 4000LM	4000	32W	4000 K	90	RECESSED	CEILING	ACUITY BRANDS	2VTL4 40L LP940
L1N	2X4 RECESSED 4000LM WITH NIGHT-LIGHTING CAPABILITIES	4000	32W	4000 K	90	RECESSED	CEILING	ACUITY BRANDS	2VTL4 40L LP940
L2	2X2 RECESSED 3000LM	3000	24W	4000 K	90	RECESSED	CEILING	ACUITY BRANDS	2VTL2 30L LP940
L3	2X4 RECESSED 3000LM	3000	24W	4000 K	90	RECESSED	CEILING	ACUITY BRANDS	2VTL4 30L LP940
L3N	2X4 RECESSED 3000LM WITH NIGHT-LIGHTING CAPABILITIES	3000	24W	4000 K	90	RECESSED	CEILING	ACUITY BRANDS	2VTL4 30L LP940
L4	1X4 PENDANT 4000LM	4000	34W	4000 K	90	PENDANT	CEILING	LITHONIA	LSIX 4FT 4000LM 90CRI 40K MVOLT
E1	LED EMERGENCY LIGHTING UNIT, WIRELESS NEXUS RF REPORTING, COMPATIBLE WITH EXISTING NEXUS WIRELESS SYSTEM IN OPERATION AT NIFC		11W			CEILING	CEILING	EMERGI-LITE	TSM18-210LB-NEXRF
EX1	EXIT SIGN, NEMA 4X, WIRELESS NEXUS RF REPORTING, COMPATIBLE WITH EXISTING NEXUS WIRELESS SYSTEM IN OPERATION AT NIFC		4W			WALL	7'	EMERGI-LITE	WPREMNEXRFR

ENERGY CODE LIGHT & RECEPT CONTROL SOO		
SPACE TYPE	TAG	SEQUENCE OF OPERATIONS
BREAKROOM/KITCHEN	BRK	1. LIGHTING AUTO ON FOR 50% ILLUMINATION AND CONTROLLED RECEPTACLES AUTO ON WHEN OCCUPANCY DETECTED. 2. MANUAL ON/OFF AND BI-LEVEL 50% CONTROL OF GENERAL LIGHTING WITH WALL SWITCH OCCUPANCY SENSOR. 3. MANUAL ON/OFF CONTROL OF UNDER CABINET LIGHTING WITH WALL SWITCH OCCUPANCY SENSOR. 4. AUTO OFF ALL LIGHTING AND CONTROLLED RECEPTACLES WITHIN 15 MINUTES OF OCCUPANTS LEAVING.
CONFERENCE ROOM	CON	1. GENERAL LIGHTING AUTO ON TO 50% AND CONTROLLED RECEPTACLES AUTO ON WHEN OCCUPANCY DETECTED. 2. MANUAL ON/OFF/DIM GENERAL LIGHTING AND DOWN LIGHTING WITH SCENE SWITCHES. 3. SCENE SETTINGS - COORDINATE WITH GOVERNMENT. 4. LIGHTING IN PRIMARY AND SECONDARY DAYLIGHT ZONES WILL CONTINUOUSLY DIM BASED ON DAYLIGHT CONTRIBUTION TO MAINTAIN BETWEEN 35FC AND 50FC AT TASK LEVEL. RETAIN LAST USED DIMMING SETTING. (IF APPLICABLE) 5. AUTO OFF ALL LIGHTING, CONTROLLED RECEPTACLES, A/V SYSTEMS WITHIN 20 MINUTES OF OCCUPANTS LEAVING.
CORRIDOR	COR	1. FOLLOW FACILITY ON/OFF SCHEDULE HOURS 2. GENERAL LIGHTING AUTO ON TO 50% WHEN OCCUPANCY DETECTED (DURING OFF HOURS) 3. AUTO OFF WITHIN 20 MINUTES OF OCCUPANTS LEAVING.
LARGE PRIVATE OFFICE	LPO	1. LIGHTING AUTO ON TO 50% AND CONTROLLED RECEPTACLES AUTO ON WHEN OCCUPANCY DETECTED. 2. MANUAL ON/OFF/DIM LIGHTING WITH DIMMER SWITCH. 3. LIGHTING IN PRIMARY DAYLIGHT ZONE WILL CONTINUOUSLY DIM BASED ON DAYLIGHT CONTRIBUTION TO MAINTAIN BETWEEN 35FC AND 50FC AT TASK LEVEL. RETAIN LAST USED DIMMING SETTING. 4. AUTO OFF ALL LIGHTING AND CONTROLLED RECEPTACLES WITHIN 20 MINUTES OF OCCUPANTS LEAVING.
OPEN OFFICE	OPN	1. GENERAL LIGHTING AUTO ON TO 50% AND CONTROLLED RECEPTACLES AUTO ON WHEN OCCUPANCY DETECTED. 2. MANUAL ON/OFF/DIM GENERAL LIGHTING WITH DIMMER SWITCHES. 3. LIGHTING IN PRIMARY AND SECONDARY DAYLIGHT ZONES WILL CONTINUOUSLY DIM BASED ON DAYLIGHT CONTRIBUTION TO MAINTAIN BETWEEN 35FC AND 50FC AT TASK LEVEL. RETAIN LAST USED DIMMING SETTING. 4. AUTO OFF ALL LIGHTING AND CONTROLLED RECEPTACLES WITHIN 20 MINUTES OF OCCUPANTS LEAVING. 5. NIGHT LIGHTING ASSIGNED LIGHTS STAY ON AT A REDUCED LIGHTING LEVEL WHEN THE ZONE IS OFF.
SMALL PRIVATE OFFICE	SPO	1. LIGHTING AUTO ON TO 50% AND CONTROLLED RECEPTACLES AUTO ON WHEN OCCUPANCY DETECTED. 2. MANUAL ON/OFF LIGHTING WITH WALL SWITCH OCCUPANCY SENSOR. 3. AUTO OFF ALL LIGHTING AND CONTROLLED RECEPTACLES WITHIN 20 MINUTES OF OCCUPANTS LEAVING.
SUPPORT/STORAGE	SUP	1. LIGHTING AUTO ON WHEN OCCUPANCY DETECTED. 2. MANUAL ON/OFF AND BI-LEVEL 50% CONTROL OF GENERAL LIGHTING WITH WALL SWITCH OCCUPANCY SENSOR. 3. MANUAL ON/OFF CONTROL OF UNDER CABINET LIGHTING WITH WALL SWITCH OCCUPANCY SENSOR. 4. AUTO OFF ALL LIGHTING AND CONTROLLED RECEPTACLES WITHIN 15 MINUTES OF OCCUPANTS LEAVING.

LIGHTING CONTROL SEQUENCE OF OPERATIONS NOTES

1. OPERATING HOURS AND CONTROL SCHEDULES ARE TO BE COORDINATED WITH GOVERNMENT.

ROOM ENERGY CODE SOO SPACE TYPE		
NUMBER	NAME	SPACE TYPE
101	OPEN OFFICE	OPN
102	FOCUS	SPO
103	STORAGE	SUP
104	STRG	SUP
105	OFFICE	SPO
107	ELEC	SUP
107A	M&E	SUP
109	OFFICE	OPN
110	OFFICE	OPN
111	OFFICE	SPO
112	HALL	COR
113	MENS	SUP
114	STRG	SUP
115	HALL	COR
116	BREAK	BRK
117	CONFERENCE ROOM	CON
118	WOMENS	SUP
119	ELEC	SUP

LBYD FEDERAL, LLC
1425 Higham Street
Idaho Falls, Idaho 83402
Phone (208) 528-8718
Project No. 070117.023
© copyright 2023
These drawings and design intent are the sole property of LBYD FEDERAL, LLC which may not be reproduced without written permission.

NIFC 410A-ITS LIGHTING REPLACE

NATIONAL INTERAGENCY FIRE CENTER
United States Department of the Interior Bureau of Land Management

3833 S. DEVELOPMENT AVE BOISE, ID 83705

Sheet Title: ELECTRICAL SCHEDULES

Designed by: D. SIMS
Drawn by: D. SIMS
Checked by: M. HADDAD
Approved by: SJBD

Revisions:

#	Description	Date
0.	100% ISSUED FOR CONSTRUCTION	10/24/25

PROFESSIONAL ENGINEER LICENSED 2061470 STATE OF IDAHO MARIO AL HADDAD
10-22-2025

BLM Project # 140L0624F0150
Project # 070117.023
Date: 10/24/2025

E-601

Sheet 25 of 28

ALWAYS THINK SAFETY

10/22/2025 3:39:32 PM 100% ISSUED FOR CONSTRUCTION C:\Users\dylan.sims\Documents\070117.023E_410A_R24_Central_dsimsYNR72.rvt

New Branch Panel: Panel C

LOCATION: Elec Rm 107
SUPPLY FROM: IT Room Distribution Panel
MOUNTING: Surface Mounted
ENCLOSURE: NEMA 1

VOLTS: 208Y/120V
PHASES: 3
WIRES: 4

A.I.C. RATING: 10kA
MAINS TYPE: MCB
MAINS RATING: 100A
MCB RATING: MLO

CKT NO	LOAD SERVED	TRIP AMPS	NO POLE	LOAD - V.A. A Ø		B Ø		C Ø		NO POLE	TRIP AMPS	LOAD SERVED	CKT NO
1	IT ROOM FURNACE UNIT F-2	20A	1							1	20A	SPARE	2
3	ROOFTOP GFCI OUTLET	20A	1							1	20A	OFFICE OUTLET	4
5	SMALL ROOM FURNACE UNIT F-1	20A	1							1	20A	SPARE	6
7	SPARE	20A	1							1	20A	SPARE	8
9	SPARE	20A	1							2	30A	CONDENSING UNIT - ROOF UNIT CU-1	10
11	PANEL/STORAGE ROOM EAST WALL OUTLETS	20A	1										12
13	LAPTOP SHELF	20A	1							1	20A	SPARE	14
15	LAPTOP SHELF	20A	1							1	20A	SPARE	16
17	LAPTOP SHELF	20A	1							1	20A	SPARE	18
19	LAPTOP SHELF	20A	1							1	20A	SPARE	20
21	LAPTOP SHELF	20A	1							1	20A	SPARE	22
23	LAPTOP SHELF	20A	1							1	20A	SPARE	24
25	SPARE	20A	1							1	20A	SPARE	26
27	SPARE	20A	1							1	20A	SPARE	28
29										1	20A	SPARE	30
31	SPARE	20A	1							1	20A	SPARE	32
33	SPARE	20A	1							2	70A	PANEL E FEEDER	34
35	CONDENSING UNIT - ROOF UNIT CU-2	25A	2										36
37										1	20A	OUTLET OFFICE WALL	38
39	SPARE	20A	1							1	20A	SPARE	40
41	SPARE	20A	1							1	20A	F/A CONTROL PANEL TELECO ROOM	42
	TOTAL LOAD PER PHASE:			0		0		0					
	TOTAL AMPS PER PHASE:			0.0		0.0		0.0					
	TOTAL VOLT-AMPS:			0						TOTAL AMPS:		0.0	

New Branch Panel: Panel D

LOCATION: Elec Rm 107
SUPPLY FROM: IT Room Distribution Panel
MOUNTING: Surface Mounted
ENCLOSURE: NEMA 1

VOLTS: 208Y/120V
PHASES: 3
WIRES: 4

A.I.C. RATING: 10kA
MAINS TYPE: MCB
MAINS RATING: 100A
MCB RATING: MLO

CKT NO	LOAD SERVED	TRIP AMPS	NO POLE	LOAD - V.A. A Ø		B Ø		C Ø		NO POLE	TRIP AMPS	LOAD SERVED	CKT NO
1	MICRO/COFFEE FRONT ENTRANCE	20A	1	-	-					1	20A	WEST WALL OUTLETS	2
3	LIGHTS RAMP ROOM HELP DESK NORTH	20A	1			-	-			1	20A	EMERGENCY LIGHT RAMP ROOM	4
5	LIGHTS RAMP ROOM HELP DESK SOUTH	20A	1					-	-	1	20A	MAIN ROOM POWER WHIP & CONVENIENCE OUTLET	6
7	LIGHTS - STORAGE/PANEL ROOM	20A	1	-	-					1	20A	OFFICE POWER WHIP	8
9	RAMP CONVENIENCE OUTLET	20A	1			-	-			1	20A	SOUTH WALL RAMP ROOM	10
11	SPARE	20A	1					-	-	1	20A	WEST WALL /PANEL ROOM OUTLETS	12
13	TELEPHONE SHACK LIGHTS & POWER	20A	1	-	-					1	20A	SPARE	14
15	OFFICE & ENTRANCE WIREMOLD OUTLETS	20A	1			-	-			1	20A	RAMP ROOM WIREMOLD OUTLETS	16
17	SPARE	20A	1					-	-	1	20A	RAMP ROOM WIREMOLD OUTLETS	18
19	SPARE	20A	1	-	-					1	20A	WORKBENCH OUTLET	20
21	SPARE	20A	1			-	-			1	20A	SPARE	22
23	SPARE	20A	1					-	-	1	20A	SPARE	24
25	SPACE	-	1	-	-					1	-	SPACE	26
27	SPACE	-	1			-	-			1	-	SPACE	28
29	SPACE	-	1					-	-	1	-	SPACE	30
31	SPACE	-	1	-	-					1	-	SPACE	32
33	SPACE	-	1			-	-			1	-	SPACE	34
35	SPACE		1					-	-	1	-	SPACE	36
	TOTAL LOAD PER PHASE:			0		0		0					
	TOTAL AMPS PER PHASE:			0.0		0.0		0.0					
	TOTAL VOLT-AMPS:			0						TOTAL AMPS:		0.0	

New Branch Panel: Panel E

LOCATION: Elec Rm 107
SUPPLY FROM: Panel C
MOUNTING: Surface Mounted
ENCLOSURE: NEMA 1

VOLTS: 208Y/120V
PHASES: 3
WIRES: 4

A.I.C. RATING: 10kA
MAINS TYPE: MCB
MAINS RATING: 100A
MCB RATING: MLO

CKT NO	LOAD SERVED	TRIP AMPS	NO POLE	LOAD - V.A. A Ø		B Ø		C Ø		NO POLE	TRIP AMPS	LOAD SERVED	CKT NO
1	**OPEN OFFICE 101 REFRIGERATOR**	20A	1	500	1440					1	20A	**OPEN OFFICE 101 CONVIENCE & SHELF RECEPTACLES**	2
3	**RECEPTACLES - 102, 103, 105**	20A	1			1800	540			1	20A	**OPEN OFFICE 101 CUBICLE RECEPTACLES**	4
5	**OPEN OFFICE 101 CUBICLE RECEPTACLES**	20A	1					540	540	1	20A	**OPEN OFFICE 101 CUBICLE RECEPTACLES**	6
7	**OPEN OFFICE 109 CUBICLE RECEPTACLES**	20A	1	720	540					1	20A	**OPEN OFFICE 109 CUBICLE RECEPTACLES**	8
9	RAMP ROOM POWER WHIP/OUTLETS	20A	1			-	900			1	20A	**OPEN OFFICE 109 CUBICLE RECEPTACLES**	10
11	N.E. RAMP ROOM OUTLETS	20A	1					-	720	1	20A	**OPEN OFFICE 110 CUBICLE RECEPTACLES**	12
13	**OPEN OFFICE 110 CUBICLE RECEPTACLES**	20A	1	540	720					1	20A	**OPEN OFFICE 110 CUBICLE RECEPTACLES**	14
15	**OPEN OFFICE 110 CUBICLE RECEPTACLES**	20A	1			720	500			1	20A	**BREAK ROOM 116 REFRIGERATOR**	16
17	**BREAK ROOM 116 RECEPTACLES**	20A	1					720	-	1	20A	SPARE	18
	TOTAL LOAD PER PHASE:			4460		4460		2520					
	TOTAL AMPS PER PHASE:			37.2		37.2		21.0					
	TOTAL VOLT-AMPS:			11440						TOTAL AMPS:		31.8	

LBYD FEDERAL, LLC
1425 Higham Street
Idaho Falls, Idaho 83402
Phone (208) 528-8718
Project No. 070117.023

© copyright 2023
These drawings and design intent are the sole property of LBYD FEDERAL, LLC which may not be reproduced without written permission.

GENERAL SHEET NOTES:

1. PANELS C, D, AND E AND ALL BRANCH BREAKERS SHOWN ON THIS SHEET ARE NEW AND REPLACEMENTS OF EXISTING PANELS. NEW LOADS IN BOLT FONT. EXISTING CIRCUITS TAKEN FROM AS-BUILTS AND PHYSICAL CIRCUIT DIRECTORIES AND SHALL BE RE-TERMINATED TO NEW PANELS AT SAME BREAKER SPACES WITH NEW BRANCH BREAKERS WITH THE SAME RATINGS. CONTRACTOR SHALL TRACE DOWN THE EXISTING BRANCH CIRCUITS AND PROVIDE AN UPDATED TYPED PANEL DIRECTORY.
2. EXISTING LOADS ARE NOT KNOWN AND THEREFORE NOT SHOWN. CONTRACTOR SHALL VERIFY AND ENSURE THE NEW LOADS DO NOT OVERLOAD THE PANELS.
3. CONTRACTOR SHALL VERIFY THE KAIC RATING FOR EACH PANEL.

ALWAYS THINK SAFETY

NATIONAL SYSTEM OF PUBLIC LANDS
U.S. DEPARTMENT OF THE INTERIOR
BUREAU OF LAND MANAGEMENT

NIFC 410A-ITS LIGHTING REPLACE

NATIONAL INTERAGENCY FIRE CENTER
United States Department of the Interior Bureau of Land Management
3833 S. DEVELOPMENT AVE BOISE, ID 83705

Sheet Title: ELECTRICAL SCHEDULES

Designed by: D. SIMS
Drawn by: D. SIMS
Checked by: M. HADDAD
Approved by: SJBD

Revisions:

#	Description	Date
0.	100% ISSUED FOR CONSTRUCTION	10/24/25

PROFESSIONAL ENGINEER LICENSED 2061470 STATE OF IDAHO MARIO AL HADDAD
10-22-2025

BLM Project # 140L0624F0150
Project # 070117.023
Date: 10/24/2025

E-602

10/22/2025 3:39:36 PM 100% ISSUED FOR CONSTRUCTION C:\Users\dylan.sims\Documents\070117.023E_410A_R24_Central_dsimsYNR72.rvt

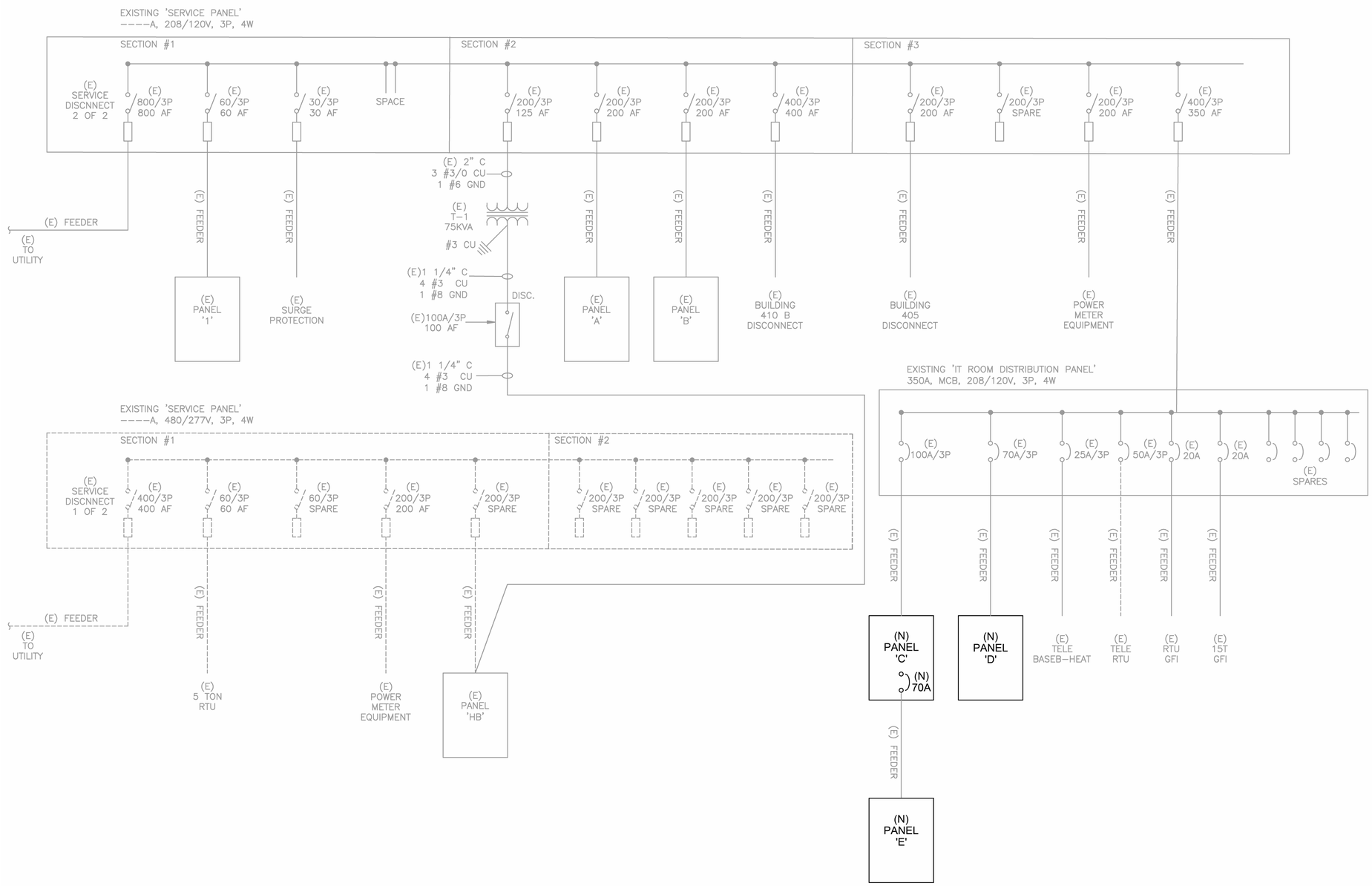

LBYD FEDERAL, LLC
1425 Higham Street
Idaho Falls, Idaho 83402
Phone (208) 528-8718
Project No. 070117.023
© copyright 2023
These drawings and design intent are the sole property of LBYD FEDERAL, LLC which may not be reproduced without written permission.

NIFC 410A-ITS LIGHTING REPLACE

NATIONAL INTERAGENCY FIRE CENTER
United States Department of the Interior Bureau of Land Management

3833 S. DEVELOPMENT AVE BOISE, ID 83705

Sheet Title: ELECTRICAL ONE-LINE DIAGRAM

Designed by: D. SIMS
Drawn by: D. SIMS
Checked by: M. HADDAD
Approved by: SJBD

Revisions:

#	Description	Date
0	100% ISSUED FOR CONSTRUCTION	10/24/25

PROFESSIONAL ENGINEER LICENSED 2061470 STATE OF IDAHO MARIO AL HADDAD
10-22-2025

BLM Project # 140L0624F0150
Project # 070117.023
Date: 10/24/2025

E-701

Sheet 27 of 28

ALWAYS THINK SAFETY

10/22/2025 3:39:41 PM 100% ISSUED FOR CONSTRUCTION C:\Users\dylan.sims\Documents\070117.023E_410A_R24_Central_dsimsYNR72.rvt

LBYD FEDERAL, LLC
1425 Higham Street
Idaho Falls, Idaho 83402
Phone (208) 528-8718
Project No. 070117.023
© copyright 2023
These drawings and design intent are the sole property of LBYD FEDERAL, LLC which may not be reproduced without written permission.

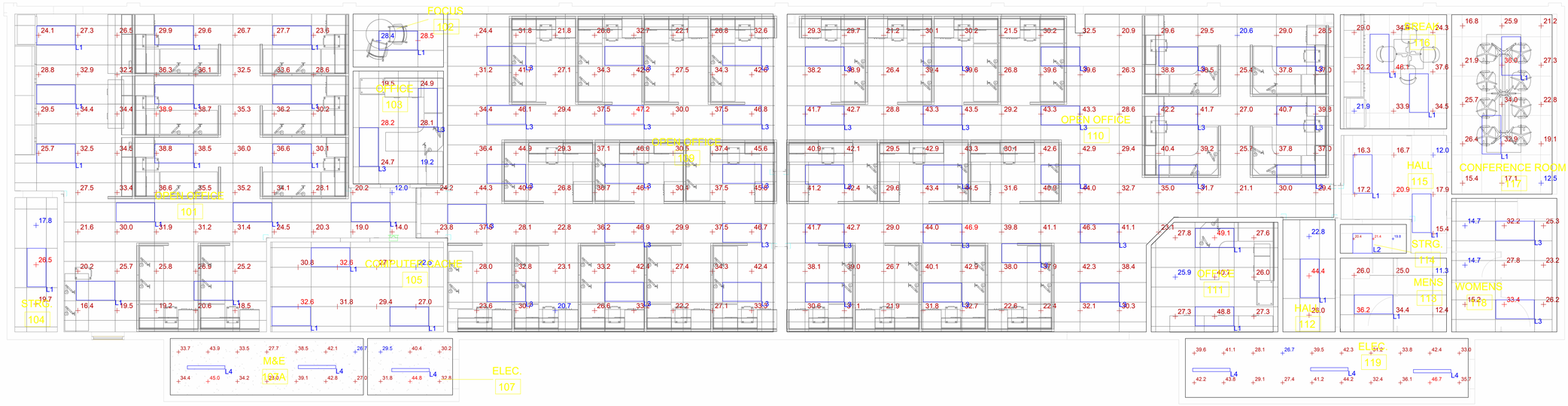

Statistics

Description	Symbol	Avg	Max	Min	Max/Min	Avg/Min
BREAK 116	+	32.7 fc	46.1 fc	21.9 fc	2.1:1	1.5:1
COMPUTER CACHE 105	+	29.3 fc	32.6 fc	22.5 fc	1.4:1	1.3:1
CONFERENCE ROOM 117	+	23.7 fc	36.0 fc	12.5 fc	2.9:1	1.9:1
ELEC 107	+	34.9 fc	44.8 fc	29.5 fc	1.5:1	1.2:1
ELEC 119	+	36.8 fc	46.7 fc	26.7 fc	1.7:1	1.4:1
FOCUS 102	+	28.4 fc	28.5 fc	28.4 fc	1.0:1	1.0:1
HALL 112	+	31.1 fc	44.4 fc	22.8 fc	1.9:1	1.4:1
HALL 115	+	16.6 fc	20.9 fc	12.0 fc	1.7:1	1.4:1
M&E 107A	+	35.5 fc	45.0 fc	26.7 fc	1.7:1	1.3:1
MENS 113	+	24.2 fc	36.2 fc	11.3 fc	3.2:1	2.1:1
OFFICE 103	+	24.1 fc	28.2 fc	19.2 fc	1.5:1	1.3:1
OFFICE 109	+	33.9 fc	47.2 fc	20.7 fc	2.3:1	1.6:1
OFFICE 110	+	35.0 fc	46.9 fc	20.6 fc	2.3:1	1.7:1
OFFICE 111	+	33.4 fc	49.1 fc	25.9 fc	1.9:1	1.3:1
OPEN OFFICE 101	+	28.9 fc	38.9 fc	12.0 fc	3.2:1	2.4:1
STRG 104	+	21.3 fc	26.5 fc	17.8 fc	1.5:1	1.2:1
STRG 114	+	20.5 fc	21.4 fc	19.8 fc	1.1:1	1.0:1
WOMENS 118	+	23.6 fc	33.4 fc	14.7 fc	2.3:1	1.6:1

ALWAYS THINK SAFETY

NIFC 410A-ITS LIGHTING REPLACE

NATIONAL INTERAGENCY FIRE CENTER
United States Department of the Interior Bureau of Land Management

3833 S. DEVELOPMENT AVE BOISE, ID 83705

Sheet Title: PHOTOMETRIC PLAN

Designed by: D. SIMS
Drawn by: D. SIMS
Checked by: M. HADDAD
Approved by: SJBD

Revisions:

#	Description	Date
0.	100% ISSUED FOR CONSTRUCTION	10/24/25

PROFESSIONAL ENGINEER LICENSED 2061470 STATE OF IDAHO MARIO AL HADDAD
10-22-2025

BLM Project # 140L0624F0150
Project # 070117.023
Date: 10/24/2025

E-702

Sheet 28 of 28

10/22/2025 3:39:49 PM 100% ISSUED FOR CONSTRUCTION C:\Users\dylan.sims\Documents\070117.023E_410A_R24_Central_dsimsYNR72.rvt