ABBREVIATIONS

&	AND
@	AT
℄	CENTER LINE
Ø	DIAMETER
#	NUMBER
BP	BASE PLATE
DEVEL	DEVELOPMENT
DIA	DIAMETER
DIM	DIMENSION
DS	DOWNSTREAM
EF	EACH FACE
EL	ELEVATION
ELEV	ELEVATION
EQ	EQUAL
EW	EACH WAY
FIN GR	FINISH GRADE
FIN	FINISH
FIG	FIGURE
FL	FLOOR
FT	FOOT
GALV	GALVANIZED
GRTG	GRATING
HSS	HOLLOW STRUCTURAL SECTION
L	LENGTH
Ldr	POST-INSTALLED DEVELOPMENT LENGTH
LSL	LONG SLOTTED
MAX	MAXIMUM
MIN	MINIMUM
N	NORTH
NTS	NOT TO SCALE
OC	ON CENTER
OD	OUTSIDE DIAMETER
OVS	OVERSIZED
PI	POINT OF INTERSECTION
REF	REFERENCE
REINF	REINFORCEMENT, REINFORCING
REQ	REQUIRED
SPEC	SPECIFICATION
SL	SLOPE
SSL	SHORT SLOTTED
STD	STANDARD
STRUCT	STRUCTURAL
SYMM	SYMMETRICAL
T	TOP
TOC	TOP OF CONCRETE
TOG	TOP OF GRATING
TOW	TOP OF WALL
TYP	TYPICAL
US	UPSTREAM
VIF	VERIFY IN FIELD
WF	WIDE FLANGE

GENERAL NOTES

1. ALL ABBREVIATIONS, LEGENDS, DESIGN CRITERA, DEMO AND SALVAGE, CONCRETE AND REINFORCING, AND STRUCTURAL METAL NOTES ON THIS GENERAL STRUCTURAL NOTES SHEET APPLY TO ALL SHEETS.
2. FIELD VERIFY EXISTING SITE CONDITIONS. ALL CONFLICTS SHALL BE RESOLVED TO THE SATISFACTION OF THE EOR AND PROJECT PERSONNEL AND BE INCORPORATED INTO THE DRAWINGS.
3. ALL CONSTRUCTION SHALL COMPLY WITH THE SPECIFICATIONS AND DESIGN CRITERIA LISTED BELOW. IN THE EVENT OF A CONFLICT, THE MORE STRINGENT REQUIREMENT SHALL GOVERN.

DESIGN CRITERIA

1. DESIGN CODES USED ARE AS FOLLOWS BELOW:
   a. ACI 318-19, BUILDING CODE REQUIREMENTS FOR STRUCTURAL CONCRETE
   b. ASCE 7-22, MINIMUM DESIGN LOADS FOR BUILDINGS AND OTHER STRUCTURES
   c. ASIC 360-16, SPECIFICATION FOR STRUCTURAL STEEL BUILDINGS
   d. AWS D1.1-15, STRUCTURAL WELDING CODE - STEEL
   e. IBC-15, INTERNATIONAL BUILDING CODE
   f. EM 385-1-1-14, SAFETY AND HEALTH REQUIREMENTS
   g. NAAM AMP 521-2012 PIPE RAILING SYSTEMS MANUAL
   h. NAAM MBG 531-2017 METAL BAR GRATING MANUAL

2. DESIGN LOADS PER ASCE 7-22

   LIVE LOAD: 40 PSF

   SEISMIC LOADS:

   SEISMIC LOADING WAS DEVELOPED FROM ASCE 7-22, CHAPTER 15, SEISMIC DESIGN REQUIREMENTS FOR NONBUILDING STRUCTURES

   R = 4
   Cd = 3.5
   Sds = 0.394
   Sd1 = 0.233
   TL = 16
   Ie = 1.25
   S1 = 0.153
   Cs = 0.123

GUARDRAIL AND HANDRAIL NOTES

1. GUARDRAILS AND HANDRAILS SHALL HAVE COPED AND WELDED JOINTS. IT IS ACCEPTABLE TO PROVIDE FORMED POST-TO-RAIL CORNERS WITH A BEND RADIUS OF TWO PIPE DIAMETERS, MEASURED AT THE CENTERLINE, IN LIEU OF MITERED, WELDED JOINTS. RAILS SHALL BE FREE OF BURRS, SHARP CORNERS, AND SHARP EDGGES.
2. REMOVABLE GUARDRAIL POSTS SHALL NOT EXCEED 96 INCHES IN SPACING, ON-CENTER AND PERMANENT GUARDRAIL POST SHALL NOT EXCEED 45 INCH SPACING, ON-CENTER, GUARDRAIL END POSTS SHALL BE SPACED 2 INCHES, ON-EDGE, FROM WALLS OR STRUCTURAL COMPONENTS.
3. GUARDRAIL POSTS SHALL BE 42 INCHES HIGH WHEN INSTALLED ON WORK PLATFORM.
4. TOEBOARDS SHALL BE INSTALLED ON THE EDGE SIDE OF THE GUARDRAIL POST.

POST-INSTALLED CONCRETE ANCHORS

1. NOMINAL UNDERCUT ANCHOR DIAMETER AND NOMINAL EFFECTIVE EMBEDMENT LENGTHS ARE CITED IN THE ANCHORAGE DETAILS. SEE SPECIFICATIONS FOR ANCHOR STRENGTH REQUIREMENTS.
2. ANCHOR PLATE DETAILS MAY INCLUDE A RANGE FOR ANCHOR GAGE AND SPACING. THE RANGES ARE PROVIDED TO ALLOW PLACEMENT OF ANCHORS TO AVOID WALL REINFORCEMENT AND OTHER EMBEDDED ITEMS.
3. IN GENERAL ANCHORS ARE TO BE PLACED SYMMETRICALLY ABOUT A VERTICAL AXIS ABOUT THE CENTER OF THE ANCHOR PLATE. ANCHORS MAY BE PLACED PLUS OR MINUS 1" VERTICALLY AND OR HORIZONTALLY ABOUT THE POINT OF SYMMETRY. MINIMUM EDGE DISTANCE, GAGE AND SPACING SHALL BE MAINTAINED.
4. ANCHOR PLATES MAY BE FIELD DRILLED TO MATCH INSTALLED ANCHORS. DRILL HOLES, OR SUBDRILL AND REAM, NOT MORE THAN 1/16 INCH LARGER THAN THE DIAMETER OF THE ANCHOR BOLT, UNLESS SHOWN OTHERWISE ON THE DRAWINGS, AISC 360 PROVISIONS FOR OVERSIZED ANCHOR ROD HOLES DO NOT APPLY UNLESS SPECIFICALLY SHOWN ON THE DRAWINGS. REPAIR COATINGS AFTER FIELD DRILLING IN ACCORDANCE WITH THE SPECIFICATIONS.
5. GROUT PAD THICKNESS MAY BE SHOWN. ACTUAL GROUT PAD THICKNESS SHALL BE BASED ON THE GROUT MATERIAL SELECTED BY THE CONTRACTOR AND ABILITY TO CONSOLIDATE GROUT BETWEEN THE EXISTING CONCRETE AND ANCHOR PLATE.
6. PRIOR TO ANCHOR PLATE PLACEMENT, ANCHORS SHALL BE TORQUED TO MANUFACTURE'S SPECIFICATIONS TO VERIFY ANCHOR HAS BEEN ADEQUATELY INSTALLED.
7. DURING INSTALLATION OF ANCHOR PLATES, ANCHORS SHALL NOT BE PLACED IN BENDING. ANCHOR PLATES SHALL BE FULLY SUPPORTED OR SHORED TO PREVENT BEARING ON ANCHORS. TEMPORARY SUPPORT ANGLES WITH ANCHORS OR OTHER MEANS OR SUPPORT MAY BE USED. ANCHORS SHALL NOT HAVE LEVELING NUTS BELOW THE ANCHOR PLATE.
8. ANCHOR PLATES MAY UTILIZE LEVELING BOLTS TO AID IN INSTALLATION AND ALIGNMENT OF ANCHOR PLATES. THE LEVELING BOLTS ARE TO BE PLACED MINIMUM OF 2 1/2" AWAY FROM ANY ANCHOR. THE LEVELING BOLTS MAY REMAIN IN PLACE.

STRUCTURAL METAL NOTES

1. MATERIALS PER BELOW UNLESS NOTED OTHERWISE:

W SHAPES, BAR AND PLATES	ASTM A992 OR A572 (50 KSI)
L,S SHAPES, ROUND BARS	ASTM A36 (36 KSI)
HSS	ASTM A500, GRADE B
HIGH STRENGTH BOLTS	ASTM F3125, GRADE A325N
ANCHOR RODS	ASTM F1554, GRADE 36

2. ALL STRUCTURAL STEEL WORK SHALL CONFORM TO AMERICAN INSTITUTE OF STEEL CONSTRUCTION SPECIFICATION FOR STRUCTURAL STEEL BUILDINGS.
3. SHOP DRAWINGS FOR ALL STRUCTURAL STEEL SHALL BE SUBMITTED AND APPROVED PRIOR TO ANY STEEL FABRICATION.
4. STEEL FRAMING CONNECTIONS SHALL BE BOLTED OR WELDED. BOLTS SHALL BE A MINIMUM OF 3/4" DIAMETER ASTM F3125, GRADE A325, BOLTS UNLESS NOTED OTHERWISE. ALL CONNECTIONS SHALL HAVE A MINIMUM OF 2 BOLTS OR EQUIVALENT WELD. ALL BOLTED CONNECTIONS SHALL BE SNUG TIGHT PER SPECIFICATIONS, UNLESS NOTED OTHERWISE. SLIPPED CONNECTIONS SHALL BE SNUG TIGHT THEN BACKED OFF A 1/4 TURN.
5. ALL WELD CONNECTIONS SHALL CONFORM TO THE MOST CURRENT EDITION OF AWS D1.1 FOR STRUCTURAL STEEL, AWS D1.2 FOR ALUMINUM AND AWS D1.6 FOR STAINLESS STEEL.
6. CONNECTIONS INCLUDING SHOP OR FIELD SPLICES NOT SHOWN ON THE CONTRACT DRAWINGS SHALL BE SUBMITTED FOR APPROVAL.
7. THE STRUCTURAL STEEL ERECTOR SHALL PROVIDE TEMPORARY BRACING OF THE STRUCTURAL STEEL FRAMEWORK AGAINST LATERAL LOADING SUCH AS WIND. THE BRACING SHALL REMAIN IN PLACE UNTIL THE FINAL SYSTEM FOR RESISTING LATERAL LOADS IS IN PLACE AND EFFECTIVE AS APPROVED BY THE EOR.
8. STEEL BAR GRATING SHALL HAVE BANDED EDGES AND CUTOUTS.
9. REMOVEABLE GRATING SHALL BE FASTENED WITH CLAMP-TYPE CLIPS IN ACCORDANCE WITH MANUFACTURER'S INSTRUCTIONS.
10. ALL BURRS, SHARP EDGES OR PROTRUSIONS AT GRATING ENDS SHALL BE REMOVED.

US Army Corps of Engineers®

MARK	DESCRIPTION	DATE

DESIGNED BY: M. THONNEY
DRAWN BY: M. THONNEY
CHECKED BY: D. IRONS
SUBMITTED BY: JULIA MORELOS, P.E.
SIZE: ANSI D
ISSUE DATE: MMMMM YYYY
SOLICITATION NO.: XXXXXX-XX-X-XXXX
CONTRACT NO.: WXXXXX-XX-X-XXX
FILE NO.:

U.S. ARMY CORPS OF ENGINEERS
WALLA WALLA DISTRICT
201 N. 3RD AVE.
WALLA WALLA WASHINGTON

MCNARY LOCK AND DAM
COLUMBIA RIVER, OREGON AND WASHINGTON
KAPLAN TURBINE UNIT OPTIMIZATION
UNWATERING PUMP PLATFORM

SHEET ID
S-001

STATUS

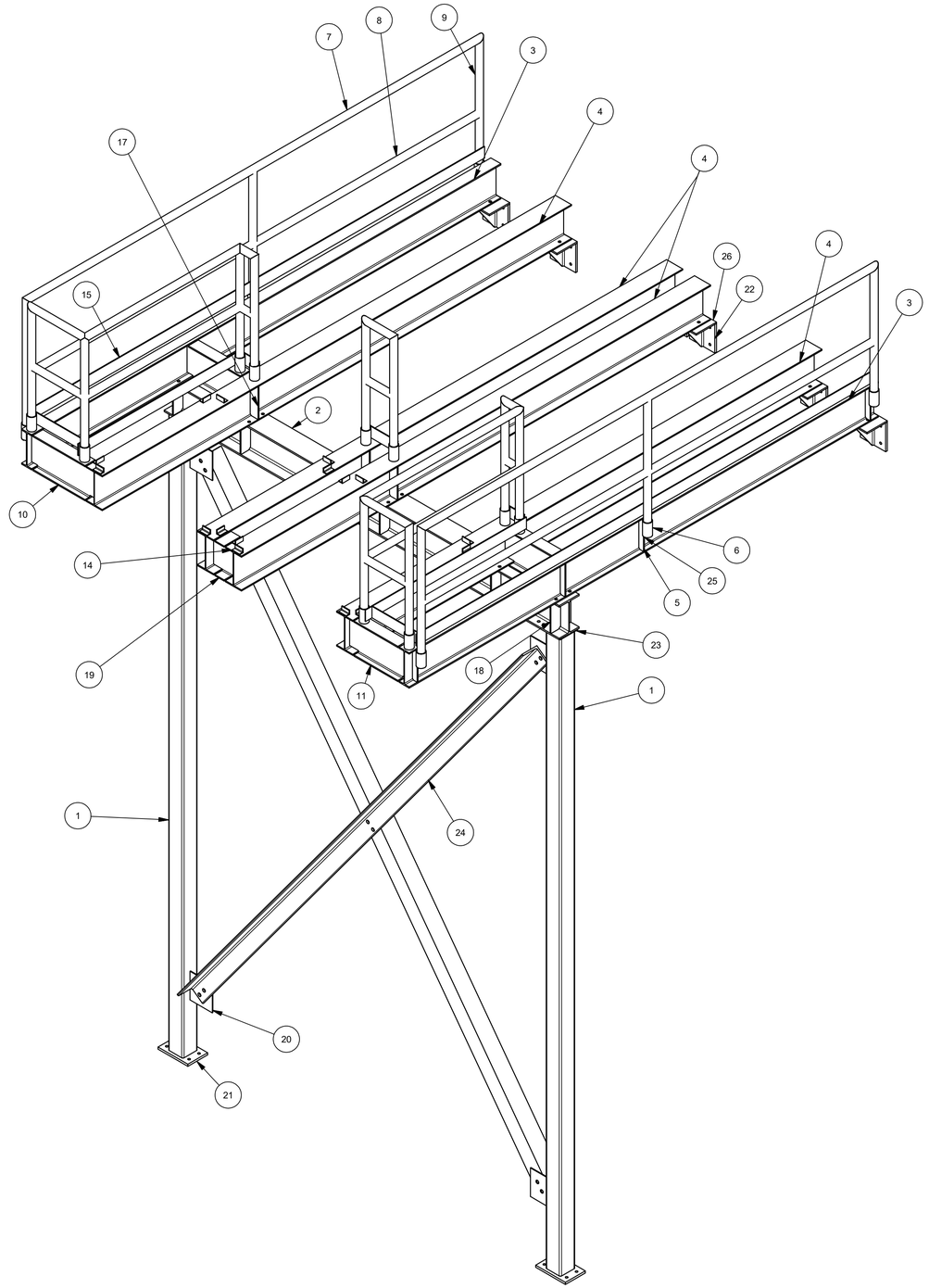

PARTS LIST

ITEM	QTY	DESCRIPTION	MATERIAL	CUT LENGTH	WEIGHT (LBS)
1	2	COL HSS6x6x1/4	ASTM A500 GR.C GALV	222 3/4 IN	
2	1	BEAM W12x40	ASTM A992 GALV	159 1/4 IN	
3	2	BEAM W12x22	ASTM A992 GALV	189 3/16 IN	
4	4	BEAM W12x26	ASTM A992 GALV	189 3/16 IN	
5	8	WEB PL3/8x11 3/8"x1 7/8"	ASTM A36 GALV		
6	16	PIPE 2 1/2" STD OR ROUND HSS2.875X0.188	ASTM A53 GR.B OR A500 GR.C GALV	5 IN	
7	2	TOP RAIL: PIPE 2 STD OR ROUND HSS 2.375X0.154	ASTM A53 GR.B OR A500 GR.C GALV	48 FT	
8	1	MIDDLE RAIL: PIPE 2 STD OR ROUND HSS 2.375X0.154	ASTM A53 GR.B OR A500 GR.C GALV	50 FT	
9	1	POST: PIPE 2 STD OR ROUND HSS 2.375X0.154	ASTM A53 GR.B OR A500 GR.C GALV	62 FT	
10	2	DIAPHRAGM: W12x22	ASTM A992 GALV	27 IN	
11	2	DIAPHRAGM: W12x22	ASTM A992 GALV	23 3/4 IN	
14	16	L1 1/2x1 1/2x1/4	ASTM A36 GALV	3 IN	
15	2	TOE PL1/4x4"	ASTM A36 GALV	48 FT	
17	6	WEB PL3/8x11 3/8"x3 1/8"	ASTM A36 GALV		
18	12	WEB PL3/8x10 7/8"x3 7/8"	ASTM A36 GALV		
19	1	DIAPHRAGM: W12X26	ASTM A992 GALV	11 IN	
20	4	PL1/4x10"x9"	ASTM A36 GALV		
21	2	BP3/4x8"x1'-0"	ASTM A36 GALV		
22	6	WT8x33.5	ASTM A992 GALV	10 IN	
23	2	CAP PL1/4x0'-7"x11.5"	ASTM A36 GALV		
24	2	L6x6x9/16	ASTM A36 GALV	234 IN	
25	16	PL1/8"x1/2"x2 3/16"	ASTM A36 GALV	2-3/16 IN	
26	6	PL 1/2"x8-1/4"x10-1/4"	ASTM A36 GALV		

CONNECTIONS

ANCHOR/BOLT TYPE	PART	MATERIAL	QUANTITY	LENGTH
FASTENERS	3/4"DIA BOLTS	ASTM F3125, GRADE A325N HDG	45	3 1/4"
FASTENERS	3/4" HEAVY HEX NUT	ASTM A563 GRADE DH HDG	45	
FASTENERS	3/4" HARDEND WASHER	ASTM F436 TYPE 1 HDG	90	
FASTENERS	1"DIA BOLTS	ASTM F3125, GRADE A325N HDG	10	3 1/4"
FASTENERS	1" HEAVY HEX NUT	ASTM A563 GRADE DH HDG	10	
FASTENERS	1" HARDEND WASHER	ASTM F436 TYPE 1 HDG	20	
MECHANICAL	3/4"Ø ANCHOR BOLT	MECHANICALLY GALVANIZED HEAVY-DUTY	25	6"
ADHESVIE	3/4"Ø THREADED ROD	ASTM F1554 GRADE 36 HDG	10	12"

NOTE: CONNECTIONS ARE TO FOLLOW SPECIFICATION SECTION 05 50 14

US Army Corps of Engineers®

MARK	DESCRIPTION	DATE

DESIGNED BY: M. THONNEY
DRAWN BY: M. THONNEY
CHECKED BY: D. IRONS
SUBMITTED BY:
JULIO MORENO ROSE, P.E.
SIZE: ANSI D
ISSUE DATE: MMMMMM YYYY
SOLICITATION NO.: XXXXXX-XX-X-XXXX
CONTRACT NO.: WXXXXX-XX-X-XXX
FILE NO.:

U.S. ARMY CORPS OF ENGINEERS
WALLA WALLA DISTRICT
201 N 3RD AVE
WALLA WALLA, WASHINGTON

MCNARY LOCK AND DAM
COLUMBIA RIVER, OREGON AND WASHINGTON
NAVIGATION LOCK
UNWATERING PUMP PLATFORM

SHEET ID
S-002

STATUS

CONTRACTOR TO PERFORM ALL WELDED FABRICATION AND FIT UP TEST.
DISASSEMBLE BOLTED CONNECTIONS AND DELIVER TO PROJECT FOR OWNER INSTALL.

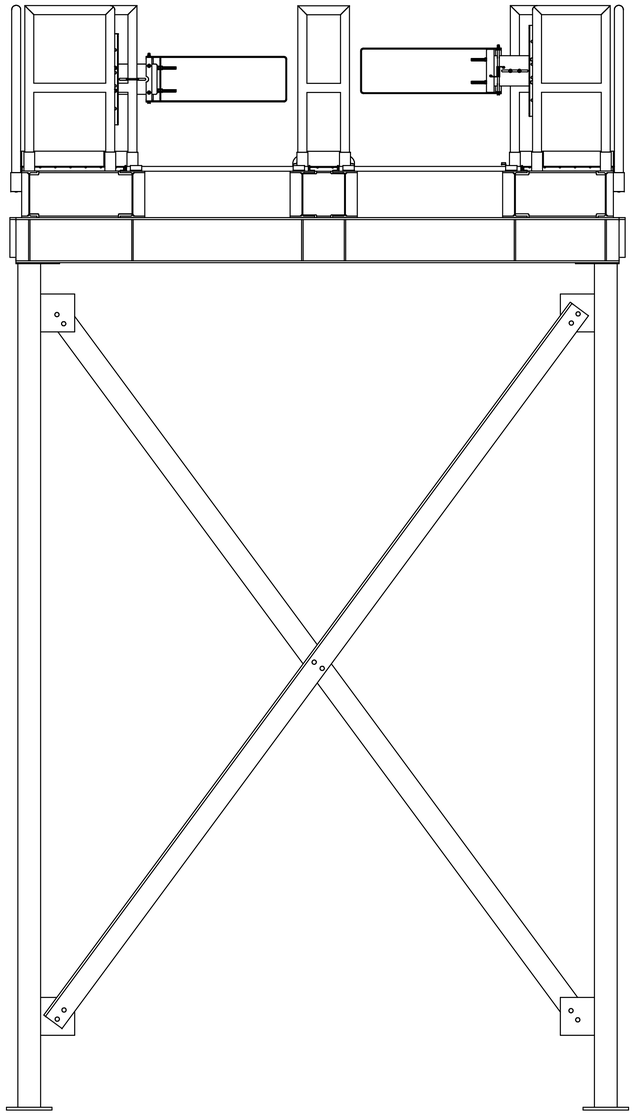

A1 FRONT VIEW: PLATFORM ASSEMBLY
SCALE: 1:20

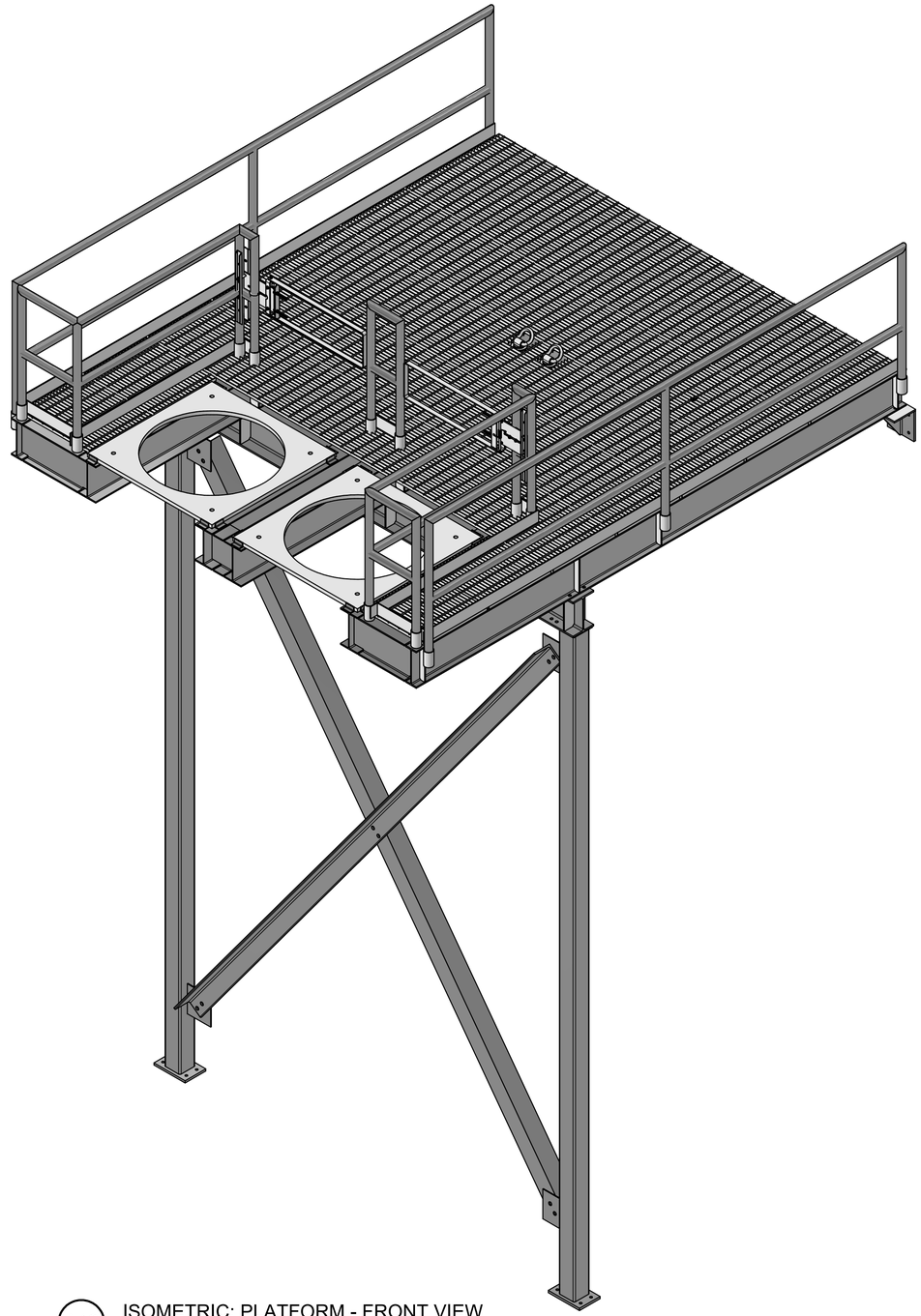

A12 ISOMETRIC: PLATFORM - FRONT VIEW
SCALE: 1:20

US Army Corps of Engineers®

MARK	DESCRIPTION	DATE

DESIGNED BY: M. THONNEY
DRAWN BY: M. THONNEY
CHECKED BY: D. IRONS
SUBMITTED BY: JULIO MORELOS, P.E.
SIZE: ANSI D
FILE NO.:
ISSUE DATE: MMMMMM YYYY
SOLICITATION NO.: XXXXXX-XX-X-XXXX
CONTRACT NO.: WXXXXX-XX-X-XXX

U.S. ARMY CORPS OF ENGINEERS
WALLA WALLA DISTRICT
201 N 3RD AVE
WALLA WALLA, WASHINGTON

MCNARY LOCK AND DAM
COLUMBIA RIVER, OREGON AND WASHINGTON
NAVIGATION LOCK
UNWATERING PUMP PLATFORM

SHEET ID
S-101

STATUS

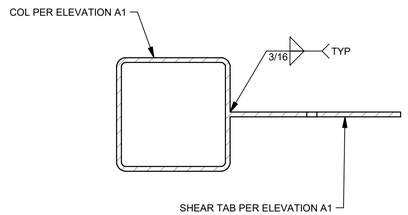

NOTE: TYP (4) PLACES

L1 SECTION: BRACE SHEAR TAB

SCALE: 1/4

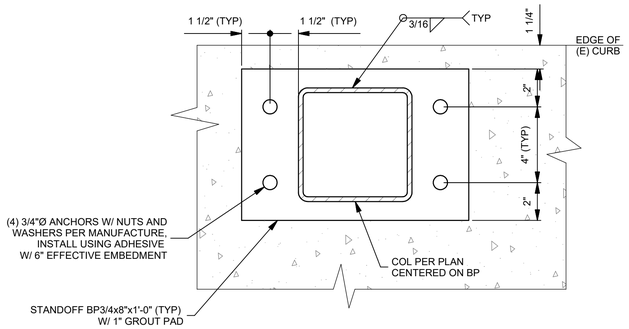

L6 SECTION: COL BASE PLATE

SCALE: 1/4

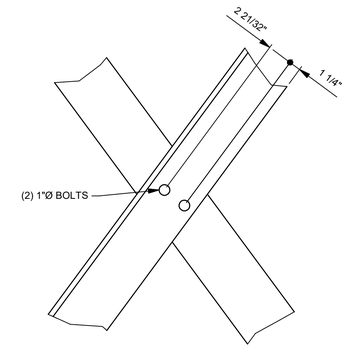

L12 DETAIL: CENTER GUSSET PLATE

SCALE: 1/8

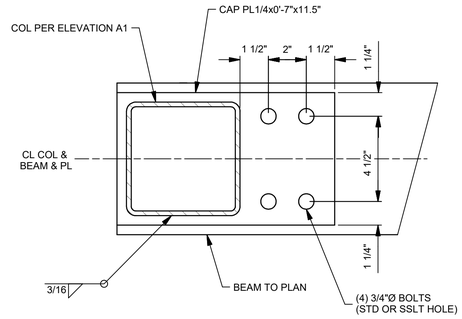

L16 SECTION: COL CONN TO BEAM

SCALE: 1/4

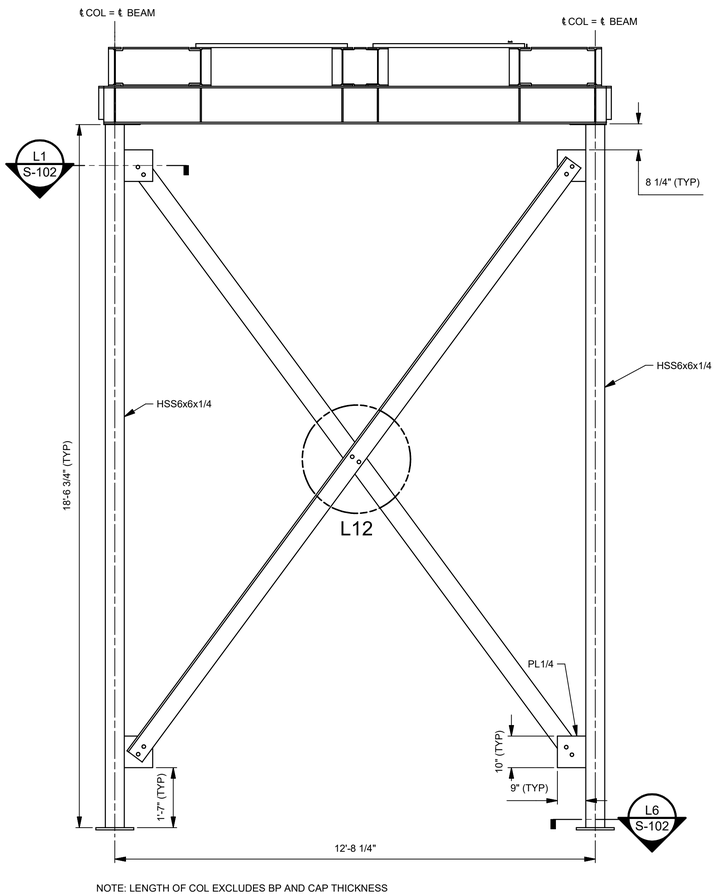

NOTE: LENGTH OF COL EXCLUDES BP AND CAP THICKNESS

A1 DETAIL: FRAME ASSEMBLY

SCALE: 1/24

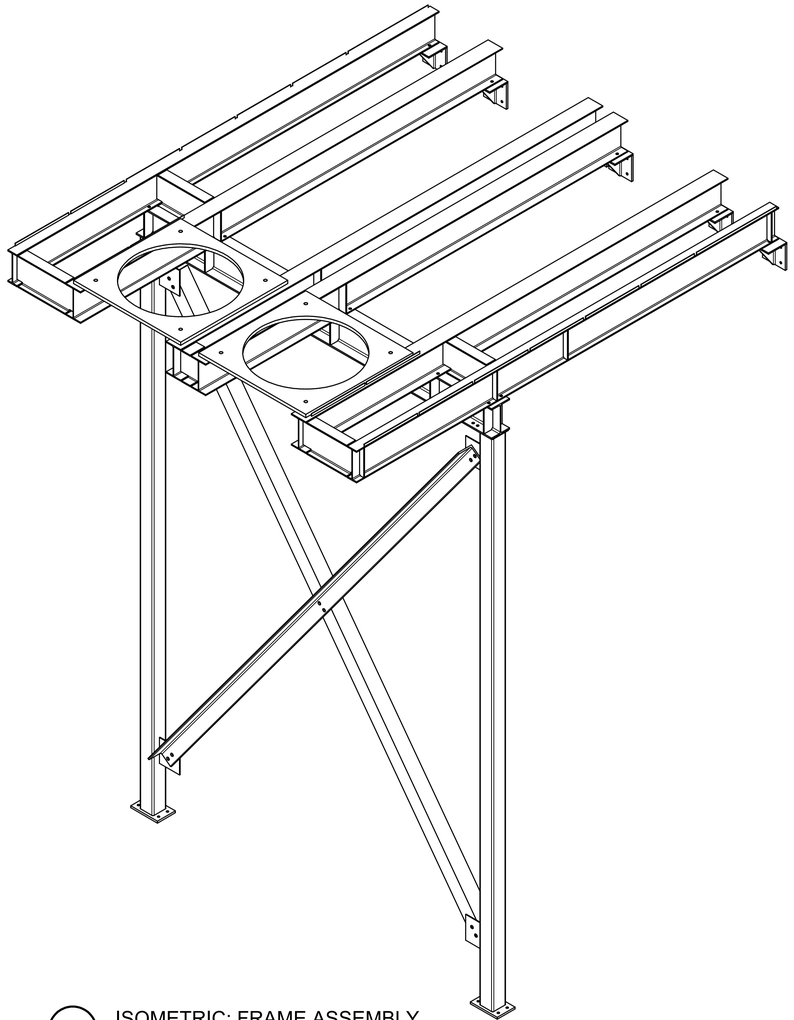

A8 ISOMETRIC: FRAME ASSEMBLY

SCALE: NTS

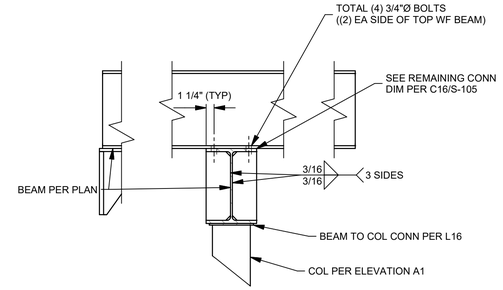

NOTE: DIAPHRAGM INTO UPPER BEAM AND GRATING NOT SHOWN FOR CLARITY

G15 SECTION: TYP BEAM TO BEAM CONN

SCALE: 1/12

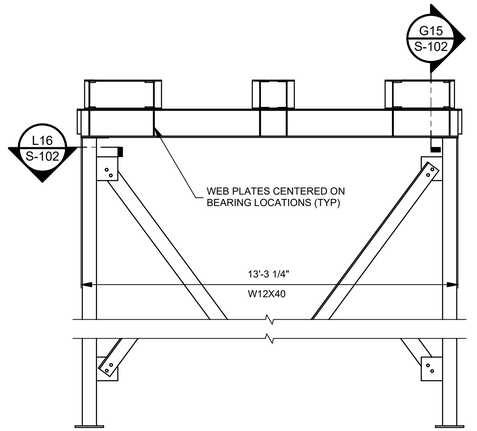

A15 DETAIL: FRAME ELEVATION

SCALE: 1/32

US Army Corps of Engineers®

MARK	DESCRIPTION	DATE

DESIGNED BY:	ISSUE DATE:
M. THONNEY	MMMMMM YYYY
DRAWN BY:	SOLICITATION NO.:
M. THONNEY	XXXXXX-XX-X-XXXX
CHECKED BY:	CONTRACT NO.:
D. IRONS	WXXXXX-XX-X-XXX
SUBMITTED BY:	
JULIE MORRIS, P.E.	
SIZE:	FILE NO.:
ANSI D	

U.S. ARMY CORPS OF ENGINEERS
WALLA WALLA DISTRICT
201 N. 3RD AVE
WALLA WALLA, WASHINGTON

MCNARY LOCK AND DAM
COLUMBIA RIVER, OREGON AND WASHINGTON
NAVIGATION LOCK MODIFICATIONS
UNWATERING PUMP PLATFORM

SHEET ID

S-102

STATUS

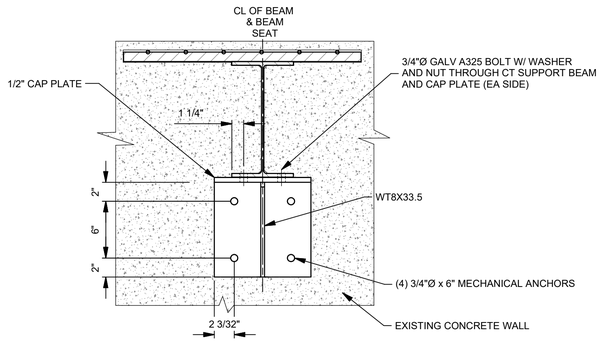

L1 SECTION: BEAM TO WALL CONN
SCALE: 1/8 0 6" 1' 2'

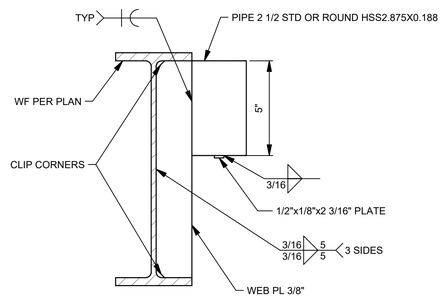

L6 SECTION: HANDRAIL SLEEVE
SCALE: 1/4 0 3" 6" 9" 12"

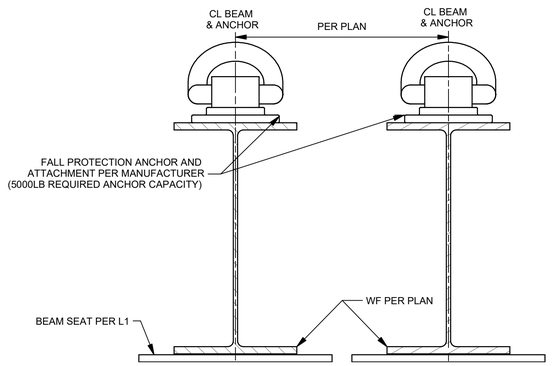

L11 SECTION: FALL PROTECTION ANCHOR/BASE PLATE
SCALE: 1/4 0 3" 6" 9" 12"

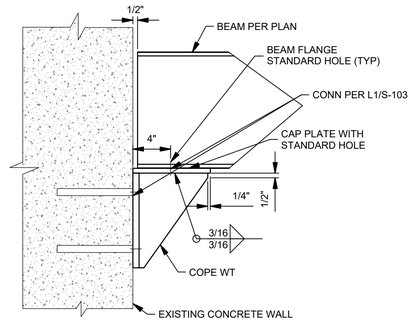

L17 SECTION: BEAM SEAT
SCALE: 1/8 0 6" 1' 2'

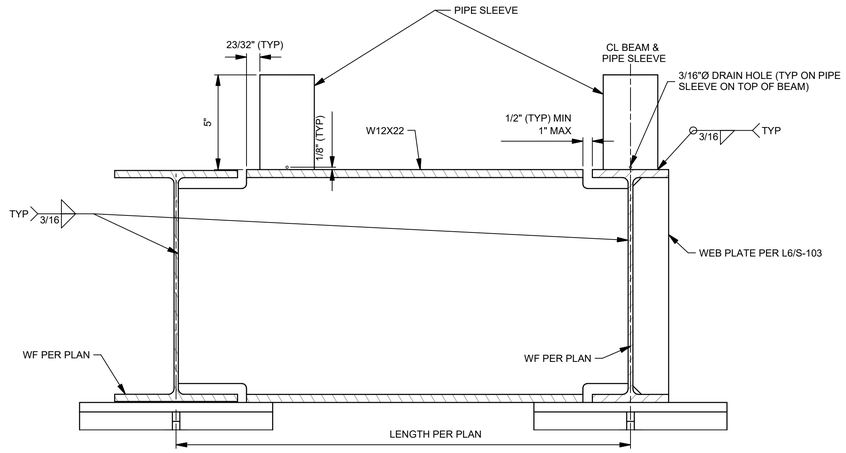

NOTES: DIAPHRAGM OCCURS IN (4) PLACES. LENGTH VARIES.

F1 SECTION: DIAPHRAGM AND HANDRAIL SLEEVE CONN
SCALE: 1/4 0 3" 6" 9" 12"

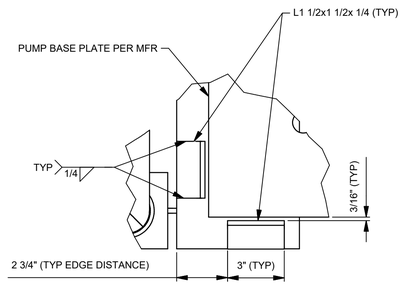

F9 DETAIL: EDGE CORNER ANGLES
SCALE: 1/4 0 3" 6" 9" 12"

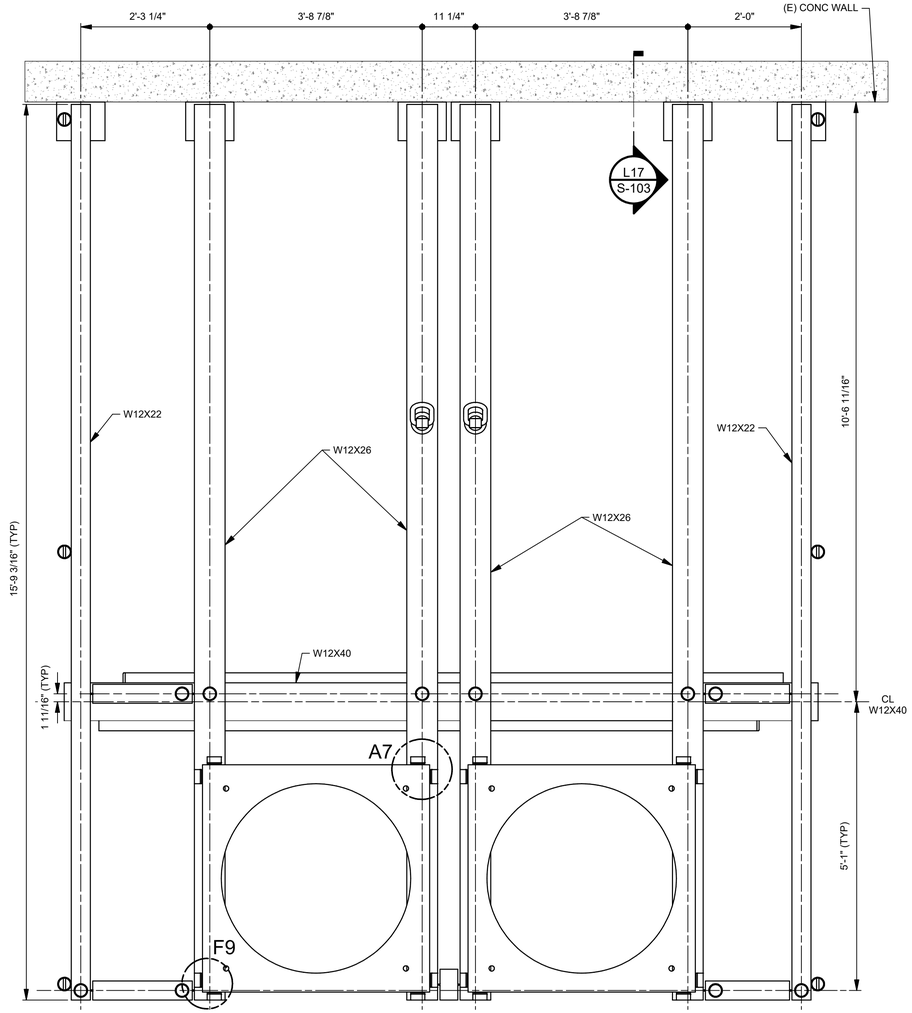

NOTE: REFER TO S-104 FOR EDGE BEAM DISTANCE FROM FACE OF S NAVLOCK WALL

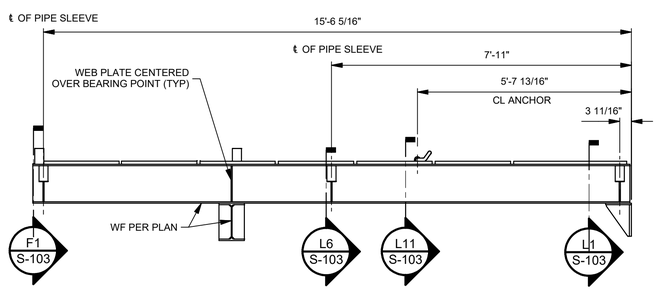

A1 ELEVATION: EDGE BEAM
SCALE: 1/24 0 1' 2' 4'

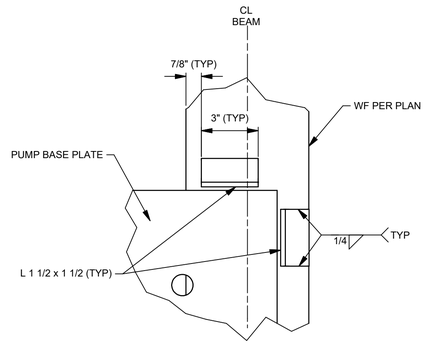

A7 DETAIL: CORNER ANGLES TYP
SCALE: 1/4 0 3" 6" 9" 12"

A12 PLAN: FRAMING
SCALE: 1/16 0 8' 16' 32'

US Army Corps of Engineers®

MARK	DESCRIPTION	DATE

DESIGNED BY: M. THONNEY
DRAWN BY: M. THONNEY
CHECKED BY: D. IRONS
SUBMITTED BY: JULIA MORENO, P.E.
SIZE: ANSI D
ISSUE DATE: MMMMMM YYYY
SOLICITATION NO.: XXXXXX-XX-X-XXXX
CONTRACT NO.: WXXXXX-XX-X-XXX
FILE NO.:

U.S. ARMY CORPS OF ENGINEERS
WALLA WALLA DISTRICT
201 N. 3RD AVE.
WALLA WALLA, WASHINGTON

MCNARY LOCK AND DAM
COLUMBIA RIVER, OREGON AND WASHINGTON
NAVIGATION LOCK MODIFICATIONS
UNWATERING PUMP PLATFORM

SHEET ID
S-103

STATUS

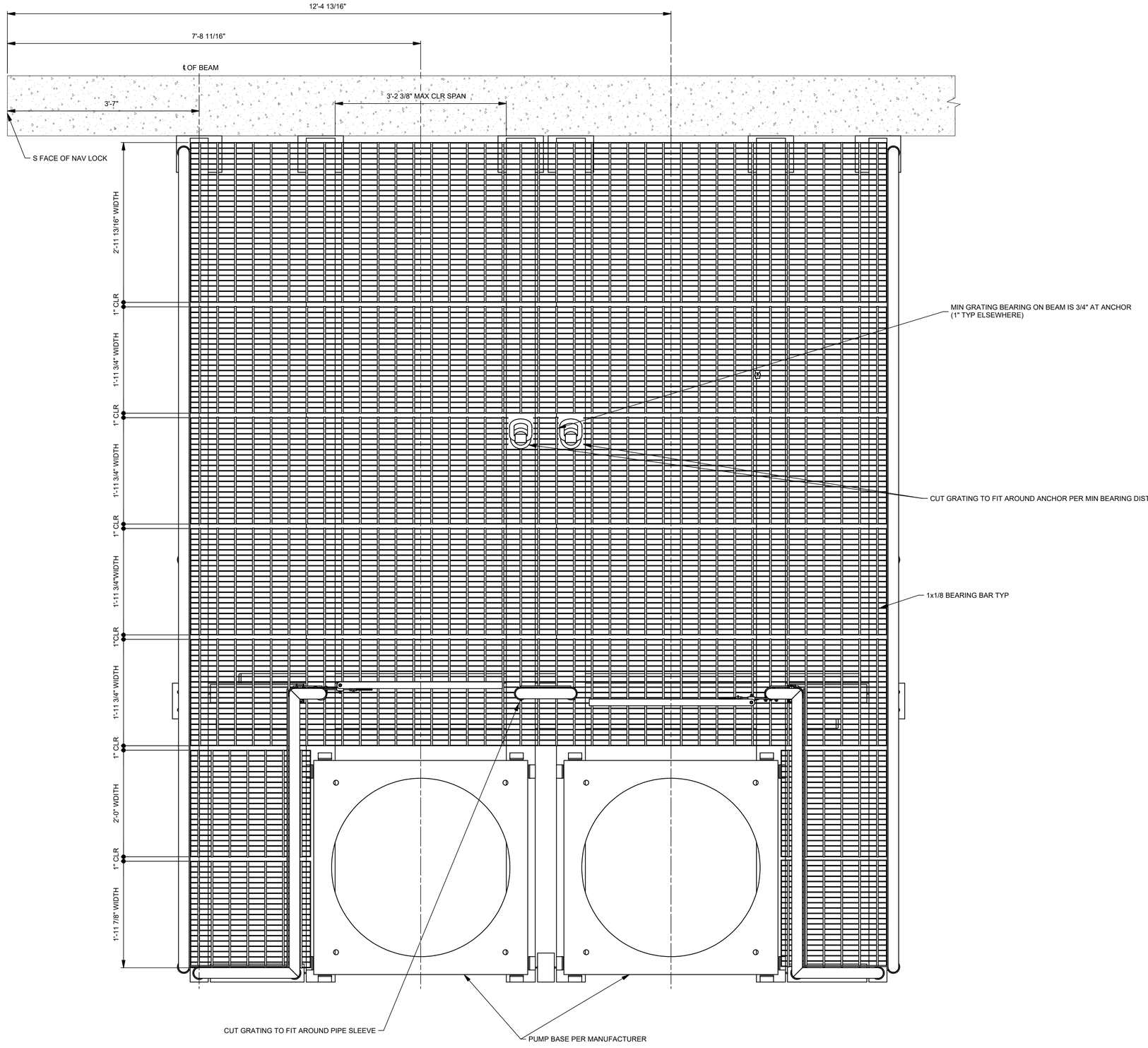

A1 PLAN: BAR GRATING LAYOUT

SCALE: 1/12

0 1' 2'

US Army Corps of Engineers®

MARK	DESCRIPTION	DATE

DESIGNED BY: M. THONNEY
DRAWN BY: M. THONNEY
CHECKED BY: D. IRONS
SUBMITTED BY: JULIA MORELOS, P.E.
SIZE: ANSI D
FILE NO.:

ISSUE DATE: MMMMMM YYYY
SOLICITATION NO.: XXXXXX-XX-X-XXXX
CONTRACT NO.: WXXXXX-XX-X-XXX

U.S. ARMY CORPS OF ENGINEERS
WALLA WALLA DISTRICT
201 N. 3RD AVE
WALLA WALLA, WASHINGTON

MCNARY LOCK AND DAM
COLUMBIA RIVER, OREGON AND WASHINGTON
UMATILLA INDIAN RESERVATION, OREGON
UNWATERING PUMP PLATFORM

SHEET ID

S-104

STATUS

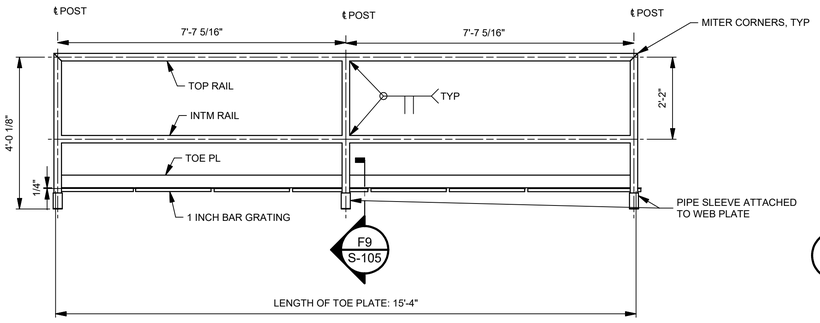

NOTE: HANDRAIL OCCURS IN TWO INSTANCES

L1 N & S GUARDRAIL

SCALE: 1/24 (0, 1', 2', 4')

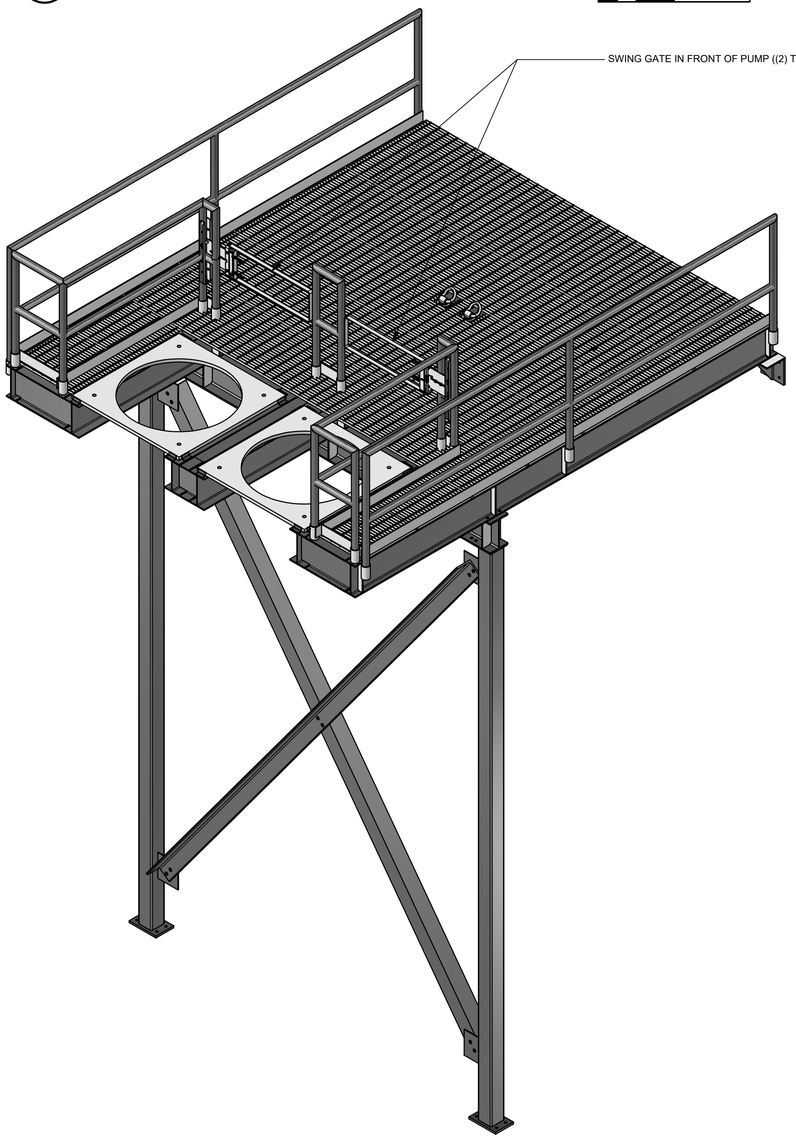

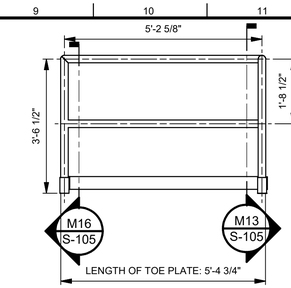

M8 ELEVATION: NORTH/WEST SIDE GUARDRAIL

SCALE: 1/24 (0, 1', 2', 4')

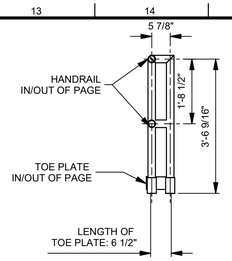

M13 GUARDRAIL SECTION

SCALE: 1/24

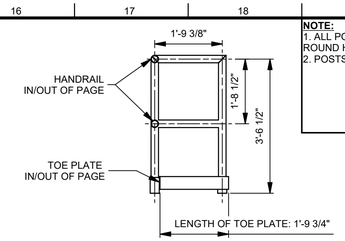

M16 GUARDRAIL SECTION

SCALE: 1/24 (0, 1', 2', 4')

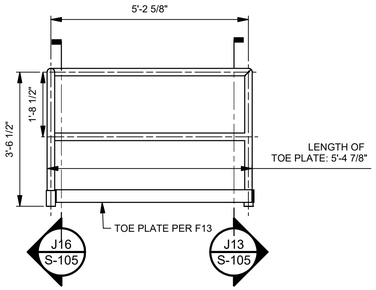

J8 SOUTH/WEST SIDE GUARDRAIL

SCALE: 1/24 (0, 1', 2', 4')

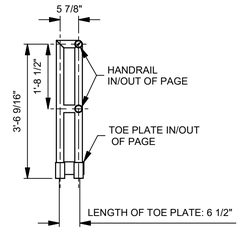

J13 GUARDRAIL SECTION

SCALE: 1/24

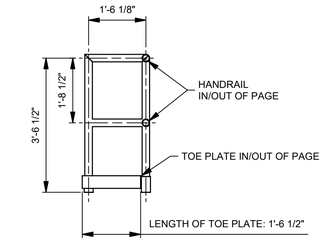

J16 GUARDRAIL SECTION

SCALE: 1/24 (0, 1', 2', 4')

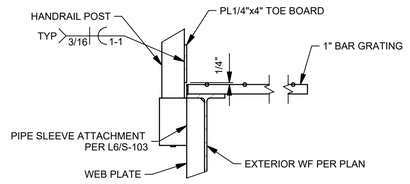

F9 TOE PLATE CONNECTION

SCALE: 1/24 (0, 1', 2', 4')

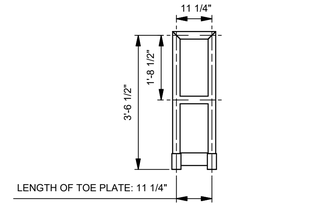

F13 CENTER GUARDRAIL

SCALE: 1/24

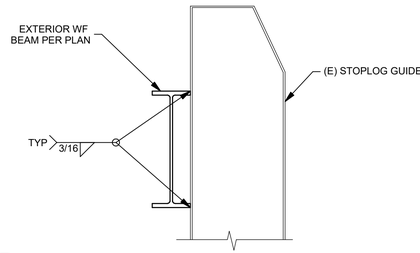

F16 (E) STOPLOG GUIDE CONNECTION

SCALE: 1/8 (0, 6", 1', 2')

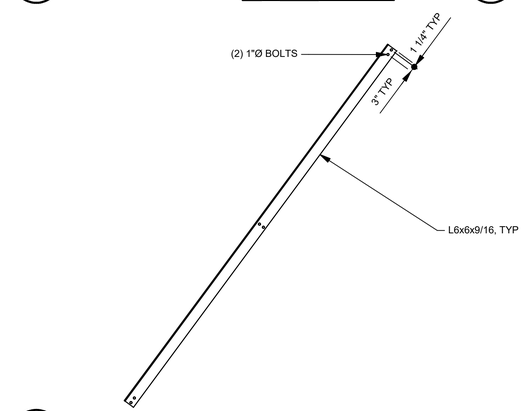

B9 DETAIL: ANGLE BRACE

SCALE: 1/32

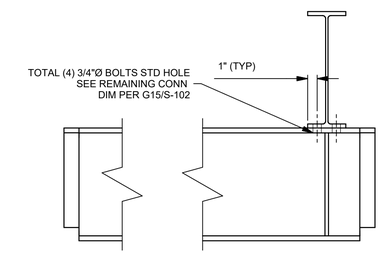

C16 TYP BEAM TO BEAM CONN

SCALE: 1/8 (0, 6", 1', 2')

NOTE:
1. ALL POSTS AND RAILS ARE PIPE 2 STD OR ROUND HSS 2.375X0.154
2. POSTS ARE CONTINUOUS AT INT OF RAILS

US Army Corps of Engineers®

MARK	DESCRIPTION	DATE

DESIGNED BY: M. THONNEY
DRAWN BY: M. THONNEY
CHECKED BY: D. IRONS
SUBMITTED BY: JULIO MORENO, P.E.
SIZE: ANSI D
ISSUE DATE: MMMMMM YYYY
SOLICITATION NO.: XXXXXX-XX-X-XXXX
CONTRACT NO.: WXXXXX-XX-X-XXX
FILE NO.:

U.S. ARMY CORPS OF ENGINEERS
WALLA WALLA DISTRICT
201 N. 3RD AVE
WALLA WALLA, WASHINGTON

MCNARY LOCK AND DAM
COLUMBIA RIVER, OREGON AND WASHINGTON
MISCELLANEOUS CONCRETE
UNWATERING PUMP PLATFORM

SHEET ID
S-105

STATUS