SPECIAL PACKAGING INSTRUCTION

Form Approved -
OMB No. 0704-0188

The public reporting burden for this collection of information is estimated to average 30 days per response, including the time for reviewing instructions, searching existing data sources, gathering and maintaining the data needed, and completing and reviewing the collection of information. Send comments regarding this burden estimate or any other aspect of this collection of information, including suggestions for reducing this burden, to Department of Defense, Washington Headquarters Services, Directorate for Information Operations and Reports (0704-0188), 1215 Jefferson Davis Highway, Suite 1204, Arlington, VA 22202-4302. Respondents should be aware that notwithstanding any other provision of law, no person shall be subject to any penalty for failing to comply with a collection of information if it does not display a currently valid OMB control number. **PLEASE DO NOT RETURN YOUR FORM TO THIS ADDRESS**

1. PART OR DRAWING NO. (CAGE) NOMENCLATURE	2. CODE IDENT	3. SPI NO.
980620 (58785) ENGINE, DIESEL	19207	AK16131455
4. NATIONAL STOCK NUMBER	**5. DATE OF DRAWING**	**6. REVISION**
2815-01-6131455	11236	-

7. QUP	8. ICQ	9. UNIT PACK WT. (LB)	10. UNIT PACK CU (CU FT)	11. UNIT PACK SIZE (INCHES)
1 EACH	NONE	1178	52.552	48.8 X 40.3 X 49.2

12. MILITARY PRESERVATION (METHOD)	18. STEPS	19. REQ'D	20. DESCRIPTION
MIL-STD-2073-1D, METHOD 53	1-A	A/R	SEE NOTE FOR ITEM PREPARATION
13. CLEANING	2-B	1	SPECIAL EQUIPMENT LIST
MIL-STD-2073-1D	3-C	A/R	ITEM PRESERVATION PROCEDURES
14. DRYING	4-D	A/R	CAPS/PLUGS: NAS-847
MIL-STD-2073-1D	5-E	A/R	PRESERVATIVE: MIL-PRF-16173, GR 4
15. PACKING	6-F	1	WRAP: MIL-PRF-121K, TY II, SIZE: 64 X 64
	7-G	1	CUSHIONING: A-A-59135, CL 1, GR A, SIZE: 600 X 24 X ¼"
a. LEVEL A	8-H	1	ENVELOPE: MIL-DTL-6060E, SIZE: 133 X 85
MIL-STD-2073-1D AND NOTE J	9-I	64u	DESICCANT: MIL-DTL-3464, TY II
b. LEVEL B	10	A/R	BLOCKING/MOUNTING: ASTM-D6199 (SEE PAGE 12)
NOT APPLICABLE	11	1	CONTAINER: ASTM-D7478, TY II, CL 2, ST A, SIZE: 44-3/4 X 38 X 42 (PAGES 10-18)
16. MARKING			
MIL-STD-129P & NOTE K			

17. NOTES / DRAWING

A. PRESERVATION AND PACKING SHALL BE INSPECTED IN ACCORDANCE WITH MIL-STD-2073-1D AND ANY APPLICABLE ITEM AND CONTAINER SPECIFICATIONS.

B. SPECIAL EQUIPMENT NEED FOR ENGINE PRESERVATION:

1. TWO (2) PRESERVATIVE SUPPLY HOSES, 3/8" I.D. APPROXIMATELY 24" IN LENGTH, ONE (1) SHALL BE EQUIPPED WITH A HOSE CLAMP TO SECURE TO THE FUEL INLET AND THE OTHER SHALL HAVE A FITTING TO MATE WITH THE FUEL OUTLET.
2. 24 VOLT D.C. POWER SUPPLY TO POWER THE STARTER MOTOR WITH SWITCH TO ENGAGE/DISENGAGE THE STARTER SILENOID.
3. SLAVE FUEL FILTER (P/N 72078)
4. SLAVE FUEL FILTER (P/N 34883)
5. SLAVE OIL FILTER (P/N 34881)
6. FUEL FLOW CHECKING TOOL GROUP (CATERPILLAR P/N 331-3626) OR AN AIR COMPRESSOR, MAX 15 PSI, WITH A SPRAYER ATTACHMENT ABLE TO PROVIDE SPRAY AND FOG PATTERNS.
7. TWO 5 GALLON PAILS OR EQUIVALENT FOR PRESERVATIVE MIXING AND DRAINAGE

C. THE FOLLOWING PROCEDURE DESCRIBES THE APPROVED METHOD FOR PRESERVATION OF THIS ENGINE:

ANY DEVIATIONS FROM THIS PROCEDURE SHALL BE PRE-APPROVED BY TACOM AND THE ENGINE MANUFACTURER.

1. REPLACE FUEL FILTERS (P/N 72078 & P/N 34883) AND OIL FILTER (P/N 34881) WITH SLAVE FILTERS FROM SPECIAL EQUIPMENT LIST (NOTE B.3, B.4 & B.5). SET INITIAL FILTERS ASIDE TO BE REINSTALLED AFTER PRESERVATION PROCESS IS COMPLETE.

SPECIAL PACKAGING INSTRUCTION

Form Approved -
OMB No. 0704-0188

The public reporting burden for this collection of information is estimated to average 30 days per response, including the time for reviewing instructions, searching existing data sources, gathering and maintaining the data needed, and completing and reviewing the collection of information. Send comments regarding this burden estimate or any other aspect of this collection of information, including suggestions for reducing this burden, to Department of Defense, Washington Headquarters Services, Directorate for Information Operations and Reports (0704-0188), 1215 Jefferson Davis Highway, Suite 1204, Arlington, VA 22202-4302. Respondents should be aware that notwithstanding any other provision of law, no person shall be subject to any penalty for failing to comply with a collection of information if it does not display a currently valid OMB control number. **PLEASE DO NOT RETURN YOUR FORM TO THIS ADDRESS**

1. PART OR DRAWING NO. (CAGE) NOMENCLATURE	2. CODE IDENT	3. SPI NO.
980620 (58785) ENGINE, DIESEL	19207	AK16131455
4. NATIONAL STOCK NUMBER	**5. DATE OF DRAWING**	**6. REVISION**
2815-01-6131455	11236	-

17. NOTES / DRAWING

2. FILL PRESERVATIVE PUMP FROM SPECIAL EQUIPMENT LIST WITH ONE GALLON OF PRESERVATIVE MIL-PRF-21260E, TYPE PE 10, ATTACH 3/8 DIAMETER SUPPLY HOSE CLAMP.

3. REMOVE CAP FROM FUEL PUMP INLET, INSTALL 3/8 PRESERVATIVE SUPPLY HOSE FROM PRESERVATIVE PUMP USING A HOSE CLAMP TO SECURE.

4. REMOVE FITTING FROM RETURN LINE, ATTACH RETURN HOSE (EQUIPPED WITH RETURN LINE MATING FITTING) AND POSITION HOSE OVER DRAINAGE CONTAINER.

5. MANUALLY PUMP APPROXIMATELY 1 GALLON OF PRESERVATIVE MIL-PRF-21260E, TYPE PE-10, THROUGH FUEL SYSTEM UNTIL ALL FUEL IS PURGED FROM THE SYSTEM AND PRESERVATIVE BEGINS TO DRAIN INTO CONTAINER. DO NOT REUSE PRESERVATIVE. (SEE PAGE 4).

6. REMOVE SUPPLY LINES, RE-CAP BOTH THE FUEL PUMP INLET AND THE RETURN LINE.

7. FILL ENGINE CRANKCASE TO PROPER OPERATING LEVEL ON OIL LEVEL GUAGE (ABOUT 12 QUARTS) USING A VCI OIL MIXTURE (50 PERCENT VCI OIL CONFORMING TO MIL-P-46002A, GRADE 2, AND 50 PERCENT ENGINE OIL).

8. INSTALL STARTER SWITCH AS SHOWN ON PAGE 5.

9. CONNECT STARTER TO 24 VOLT POWER SUPPLY AS SHOWN ON PAGE 6.

10. REMOVE CAP FROM INTAKE AND EXHAUST PORTS OF TURBO CHARGER, FOG EACH PORT WITH APPROXIMATELY 1ml OF VCI OIL MIXTURE (50 PERCENT VCI OIL CONFORMING TO MIL-P-46002A, GRADE 2, AND 50 PERCENT ENGINE OIL). SEE PAGE 7.

11. SPRAY OR FOG FLYWHEEL AND HOUSING WITH A THIN AMOUNT OF VCI OIL MIXTURE (50 PERCENT VCI OIL CONFORMING TO MIL-P-46002A, GRADE A AND 50 PERCENT ENGINE OIL).

12. REMOVE CAP FROM INTAKE MANIFOLD, SPRAY, FOG, OR INJECT 12-15ml OF VCI OIL MIXTURE (50 PERCENT VCI OIL CONFORMING TO MIL-P-46002A, GRADE 2 AND 50 PERCENT ENGINE OIL). SEE PAGE 7.

13. CYCLE ENGINE USING STARTER, DO NOT CYCLE FOR MORE THAN 5 SECONDS ALLOWING THE STARTER TO REST 30 SECONDS BETWEEN CYCLES.

14. REPEAT STEPS 12 AND 13 UNTIL 36-40 ml (TOTAL) OF VCI OIL MIXTURE HAS BEEN PROCESSED THROUGH THE INTAKE MANIFOLD.

15. REMOVE POWER SUPPLY AND SWITCH FROM STARTER.

16. REPLACE SLAVE OIL AND FULE FILTER WITH ORIGINAL FILTERS.

17. DRAIN OIL FROM CRANKCASE, REPLACE DRAIN PLUG AND TORQUE TO 25 LB/FT.

18. REPLACE ALL REMOVED CAPS AND PLUGS.

19. CAP BREATHER TUBE WITH 3 X 5 POLY BAG AND SECURE WITH TAPE ASTM-D6123.

SPECIAL PACKAGING INSTRUCTION

Form Approved -
OMB No. 0704-0188

The public reporting burden for this collection of information is estimated to average 30 days per response, including the time for reviewing instructions, searching existing data sources, gathering and maintaining the data needed, and completing and reviewing the collection of information. Send comments regarding this burden estimate or any other aspect of this collection of information, including suggestions for reducing this burden, to Department of Defense, Washington Headquarters Services, Directorate for Information Operations and Reports (0704-0188), 1215 Jefferson Davis Highway, Suite 1204, Arlington, VA 22202-4302. Respondents should be aware that notwithstanding any other provision of law, no person shall be subject to any penalty for failing to comply with a collection of information if it does not display a currently valid OMB control number. **PLEASE DO NOT RETURN YOUR FORM TO THIS ADDRESS**

1. PART OR DRAWING NO. (CAGE) NOMENCLATURE	2. CODE IDENT	3. SPI NO.
980620 (58785) ENGINE, DIESEL	19207	AK16131455
4. NATIONAL STOCK NUMBER	**5. DATE OF DRAWING**	**6. REVISION**
2815-01-6131455	11236	-

20. COOLING SYSTEM: IT IS ASSUMED THIS ENGINE, IF NEW, HAS BEEN PREVIOUSLY RUN WITH COOLANT UTILIZING NON-CHROMATE INHIBITORS BY THE MANUFACTURER. THEREFORE, THE COOLING SYSTEM PRESERVATION IS NOT REQUIRED.

SPECIAL EQUIPMENT PRESERVATIVE PUMP

SPECIAL EQUIPMENT SWITCH

SPECIAL PACKAGING INSTRUCTION

Form Approved -
OMB No. 0704-0188

The public reporting burden for this collection of information is estimated to average 30 days per response, including the time for reviewing instructions, searching existing data sources, gathering and maintaining the data needed, and completing and reviewing the collection of information. Send comments regarding this burden estimate or any other aspect of this collection of information, including suggestions for reducing this burden, to Department of Defense, Washington Headquarters Services, Directorate for Information Operations and Reports (0704-0188), 1215 Jefferson Davis Highway, Suite 1204, Arlington, VA 22202-4302. Respondents should be aware that notwithstanding any other provision of law, no person shall be subject to any penalty for failing to comply with a collection of information if it does not display a currently valid OMB control number. **PLEASE DO NOT RETURN YOUR FORM TO THIS ADDRESS**

1. PART OR DRAWING NO. (CAGE) NOMENCLATURE	2. CODE IDENT	3. SPI NO.
980620 (58785) ENGINE, DIESEL	19207	AK16131455
4. NATIONAL STOCK NUMBER	**5. DATE OF DRAWING**	**6. REVISION**
2815-01-6131455	11236	-

17. NOTES / DRAWING

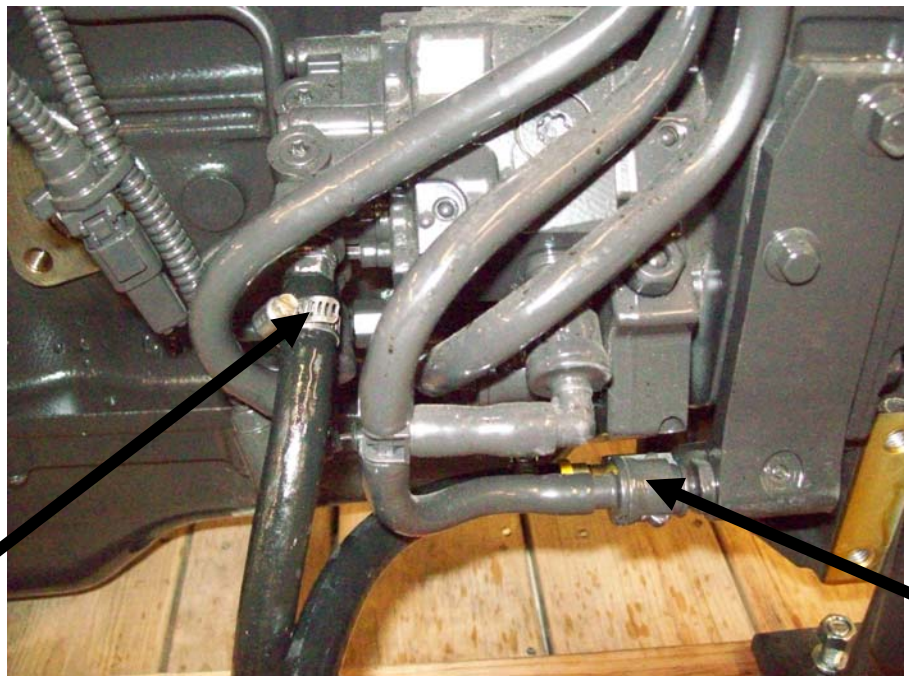

FUEL PUMP INLET **FUEL RETURN LINE**

SPECIAL PACKAGING INSTRUCTION

Form Approved -
OMB No. 0704-0188

The public reporting burden for this collection of information is estimated to average 30 days per response, including the time for reviewing instructions, searching existing data sources, gathering and maintaining the data needed, and completing and reviewing the collection of information. Send comments regarding this burden estimate or any other aspect of this collection of information, including suggestions for reducing this burden, to Department of Defense, Washington Headquarters Services, Directorate for Information Operations and Reports (0704-0188), 1215 Jefferson Davis Highway, Suite 1204, Arlington, VA 22202-4302. Respondents should be aware that notwithstanding any other provision of law, no person shall be subject to any penalty for failing to comply with a collection of information if it does not display a currently valid OMB control number. **PLEASE DO NOT RETURN YOUR FORM TO THIS ADDRESS**

1. PART OR DRAWING NO. (CAGE) NOMENCLATURE	2. CODE IDENT	3. SPI NO.
980620 (58785) ENGINE, DIESEL	19207	AK16131455
4. NATIONAL STOCK NUMBER	**5. DATE OF DRAWING**	**6. REVISION**
2815-01-6131455	11236	-

17. NOTES / DRAWING

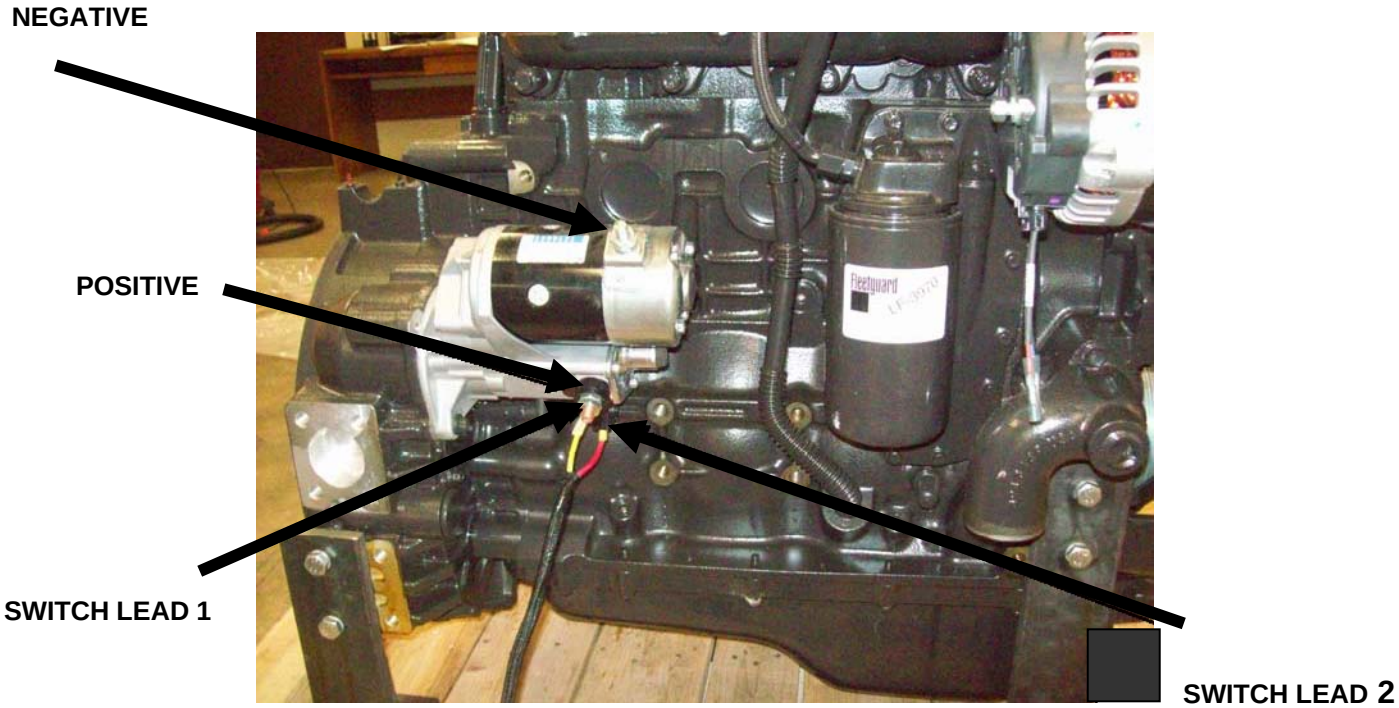

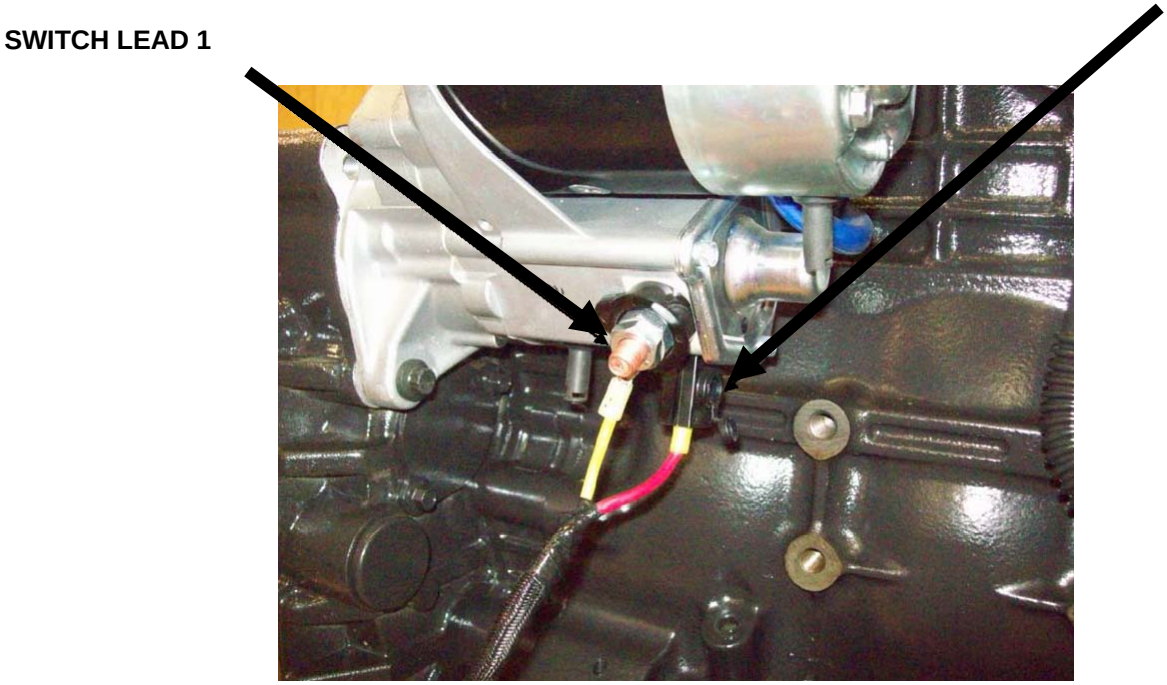

SPECIAL PACKAGING INSTRUCTION

Form Approved -
OMB No. 0704-0188

The public reporting burden for this collection of information is estimated to average 30 days per response, including the time for reviewing instructions, searching existing data sources, gathering and maintaining the data needed, and completing and reviewing the collection of information. Send comments regarding this burden estimate or any other aspect of this collection of information, including suggestions for reducing this burden, to Department of Defense, Washington Headquarters Services, Directorate for Information Operations and Reports (0704-0188), 1215 Jefferson Davis Highway, Suite 1204, Arlington, VA 22202-4302. Respondents should be aware that notwithstanding any other provision of law, no person shall be subject to any penalty for failing to comply with a collection of information if it does not display a currently valid OMB control number. **PLEASE DO NOT RETURN YOUR FORM TO THIS ADDRESS**

1. PART OR DRAWING NO. (CAGE) NOMENCLATURE	2. CODE IDENT	3. SPI NO.
980620 (58785) ENGINE, DIESEL	19207	AK16131455
4. NATIONAL STOCK NUMBER	**5. DATE OF DRAWING**	**6. REVISION**
2815-01-6131455	11236	-

JUMPER HOOK UP

SPECIAL PACKAGING INSTRUCTION

Form Approved -
OMB No. 0704-0188

The public reporting burden for this collection of information is estimated to average 30 days per response, including the time for reviewing instructions, searching existing data sources, gathering and maintaining the data needed, and completing and reviewing the collection of information. Send comments regarding this burden estimate or any other aspect of this collection of information, including suggestions for reducing this burden, to Department of Defense, Washington Headquarters Services, Directorate for Information Operations and Reports (0704-0188), 1215 Jefferson Davis Highway, Suite 1204, Arlington, VA 22202-4302. Respondents should be aware that notwithstanding any other provision of law, no person shall be subject to any penalty for failing to comply with a collection of information if it does not display a currently valid OMB control number. **PLEASE DO NOT RETURN YOUR FORM TO THIS ADDRESS**

1. PART OR DRAWING NO. (CAGE) NOMENCLATURE	2. CODE IDENT	3. SPI NO.
980620 (58785) ENGINE, DIESEL	19207	AK16131455
4. NATIONAL STOCK NUMBER	**5. DATE OF DRAWING**	**6. REVISION**
2815-01-6131455	11236	-

TURBO INTAKE AND EXHAUST PORTS

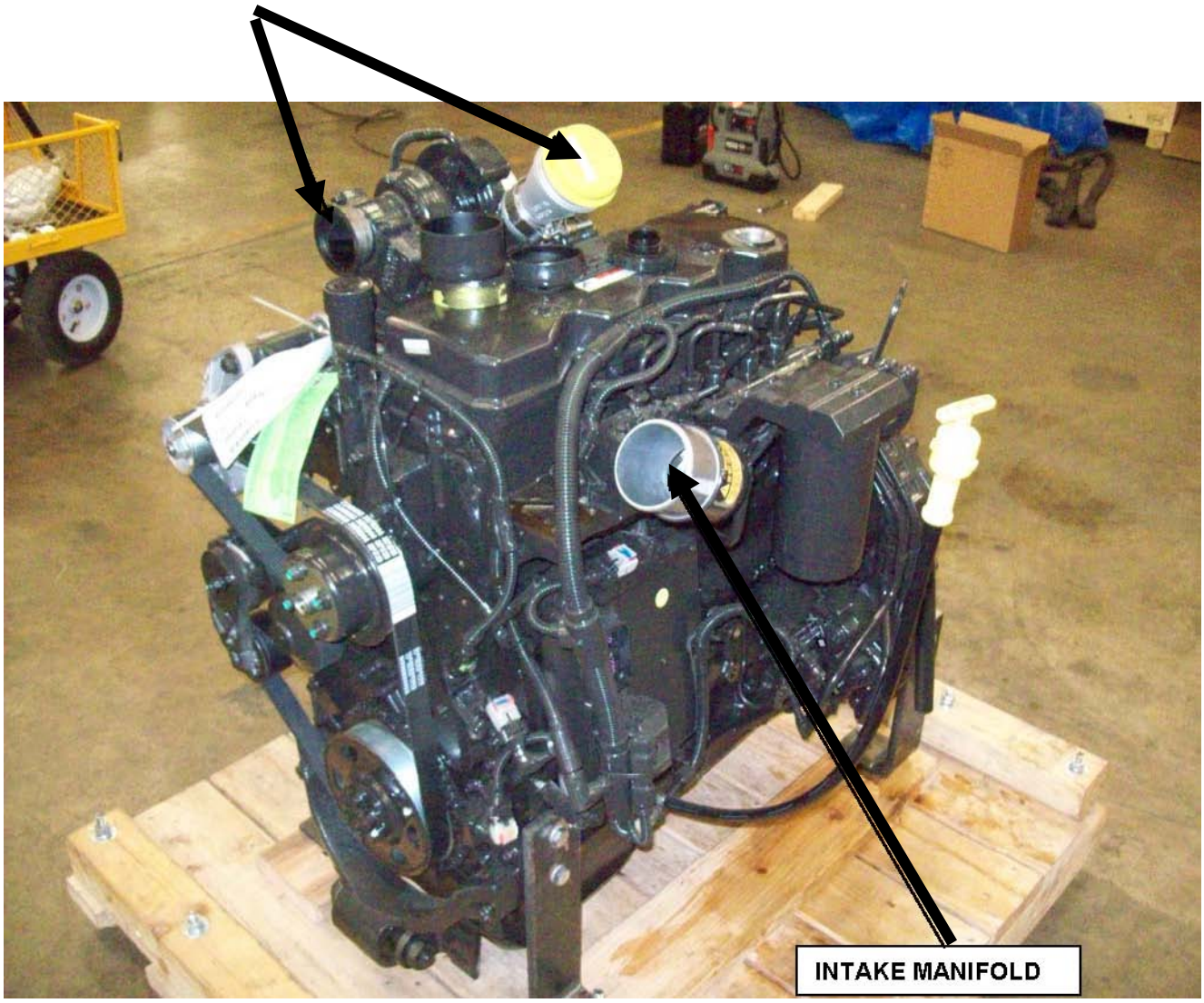

SPECIAL PACKAGING INSTRUCTION

Form Approved -
OMB No. 0704-0188

The public reporting burden for this collection of information is estimated to average 30 days per response, including the time for reviewing instructions, searching existing data sources, gathering and maintaining the data needed, and completing and reviewing the collection of information. Send comments regarding this burden estimate or any other aspect of this collection of information, including suggestions for reducing this burden, to Department of Defense, Washington Headquarters Services, Directorate for Information Operations and Reports (0704-0188), 1215 Jefferson Davis Highway, Suite 1204, Arlington, VA 22202-4302. Respondents should be aware that notwithstanding any other provision of law, no person shall be subject to any penalty for failing to comply with a collection of information if it does not display a currently valid OMB control number. **PLEASE DO NOT RETURN YOUR FORM TO THIS ADDRESS**

1. PART OR DRAWING NO. (CAGE) NOMENCLATURE	2. CODE IDENT	3. SPI NO.
980620 (58785) ENGINE, DIESEL	19207	AK16131455
4. NATIONAL STOCK NUMBER	**5. DATE OF DRAWING**	**6. REVISION**
2815-01-6131455	11236	-

D. CAPS/PLUGS: SEAL OPENINGS TO THE INTERIOR OF THE ENGINE WITH CAPS/PLUGS OF APPROPRIATE SIZE, VENDOR CAPS/PLUGS ARE ACCEPTABLE.

E. APPLY PRESERVATIVE TO ALL UNPLATED, EXTERNAL METALLIC SURFACES TO INCLUDE BRACKET MOUNTING POINTS.

F. WRAP ENGINE ENTIRELY WITH BARRIER AND SECURE WITH TAPE ASTM-D6123.

G. DOUBLE WRAP PRESERVED ENGINE USING CUSHIONING AND SECURE WITH TAPE.

H. ENVELOPE FABRICATION SHALL BE IN ACCORDANCE WITH SPECIFICATION MIL-DTL-6060. MATERIAL USED FOR FABRICATION OF GASKETS SHALL CONFORM TO SPECIFICATION ASTM F 104. GASKETS SHALL BE CEMENTED TO EACH SIDE OF THE BARRIER AT THE MOUNTING LOCATION USING MMM-A-260 ADHESIVE OR COMMERCIAL EQUIVALENT. AFTER POSITIONING BARRIER OVER BOLTS, A SUFFICIENT QUANTITY OF ADHESIVE SHALL BE APPLIED AROUND BOLT AND GASKET TO PROVIDE AIRTIGHT SEAL.

I. DESSICCANT BAGS SHALL BE PLACED IN VOID BENEATH OIL PAN WITHIN THE FOIL ENVELOPE PRIOR TO SEALING.

J. THE UNIT CONTAINER IS THE SHIPPING CONTAINER.

K. SPECIAL MARKINGS SHALL BE APPLIED AS FOLLOWS:

1. IN ADDITION TO MIL-STD-129 MARKINGS, THE UNIT CONTAINER SHALL BE MARKED ON THE TOP AND SIDES WITH MINIMUM 1/2 INCH HIGH BLACK LETTERS "**REUSABLE CONTAINER, DO NOT DESTROY**". IN ADDITION, THE TOP AND ENDS SHALL BE MARKED **"REMOVE LAG SCREWS TO OPEN CONTAINER**" USING 1/2 INCH HIGH BLACK LETTERS.

2. SECURE WARNING TAG(S) IN A CONSPICUOUS LOCATION ON THE ENGINE TO STATE, "**ENGINE OIL SYSTEM PRESERVED. ENGINE FUEL SYSTEM AND CYLINDERS PRESERVED. BEFORE CRANKING, REMOVE ALL CAP/PLUGS AND TAPE AND ADD PROPER OPERATIONAL LUBRICANT TO CRANKCASE."**

PART PACKAGING:

L. PREPARE ONE WASHER, SEALING (P/N 3963990) ACCORDING TO METHOD 33 AND THE STEPS BELOW:
1. BAG: HEAT SEAL ITEM IN MIL-DTL-22020E, SIZE: 3 X 5.
2. IDENTIFICATION: IDENTIFY THE BAG WITH SEGREGATED PACK NUMBER "1".

M. PREPARE ONE CONNECTOR, QUICK DISCONNECT (P/N 3964337) ACCORDING TO METHOD 31 AND THE STEPS BELOW:
1. BAG: HEAT SEAL ITEM IN MIL-DTL-117, CLASS B, STYLE 2, SIZE: 3 X 5.
2. IDENTIFICATION: IDENTIFY THE BAG WITH SEGREGATED PACK NUMBER "2".

SPECIAL PACKAGING INSTRUCTION

Form Approved -
OMB No. 0704-0188

The public reporting burden for this collection of information is estimated to average 30 days per response, including the time for reviewing instructions, searching existing data sources, gathering and maintaining the data needed, and completing and reviewing the collection of information. Send comments regarding this burden estimate or any other aspect of this collection of information, including suggestions for reducing this burden, to Department of Defense, Washington Headquarters Services, Directorate for Information Operations and Reports (0704-0188), 1215 Jefferson Davis Highway, Suite 1204, Arlington, VA 22202-4302. Respondents should be aware that notwithstanding any other provision of law, no person shall be subject to any penalty for failing to comply with a collection of information if it does not display a currently valid OMB control number. **PLEASE DO NOT RETURN YOUR FORM TO THIS ADDRESS**

1. PART OR DRAWING NO. (CAGE) NOMENCLATURE	2. CODE IDENT	3. SPI NO.
980620 (58785) ENGINE, DIESEL	19207	AK16131455
4. NATIONAL STOCK NUMBER	**5. DATE OF DRAWING**	**6. REVISION**
2815-01-6131455	11236	-

N. PREPARE ONE FILTER, FUEL (P/N 3978133) ACCORDING TO METHOD 10 AND THE STEPS BELOW:
1. SLEEVE: COVER FILTER TUBE WITH CF, SW, DOMESTIC, SIZE: 6 X 4. SECURE WITH TAPE.
2. WRAP: WRAP FILTER BASE WITH MIL-PRF-121G, SIZE: 9 X 5 AND SECURE WITH TAPE.
3. IDENTIFICATION: IDENTIFY ITEM WITH SEGREGATED PACK NUMBER “3”.

O. PREPARE ONE WASHER, SEALING (P/N 4894721) ACCORDING TO METHOD 31 AND THE STEPS BELOW:
1. BAG: HEAT SEAL ITEM IN MIL-DTL-117, CLASS B, STYLE 2, SIZE: 3 X 5.
2. IDENTIFICATION: IDENTIFY ITEM WITH SEGREGATED PACK NUMBER “4”.

P. PREPARE ONE PLUG, THREADED (P/N 4929619) ACCORDING TO METHOD 33 AND THE STEPS BELOW:
1. BAG: HEAT SEAL ITEM IN MIL-DTL-22020E, SIZE: 3 X 5.
2. IDENTIFICATION: IDENTIFY ITEM WITH SEGREGATED PACK NUMBER “5”.

Q. PREPARE ONE HOSE, FLEXIBLE (P/N 4939473) ACCORDING TO METHOD 31 AND THE STEPS BELOW:
1. COIL ITEM TO 9 X 9.
2. BAG: HEAT SEAL ITEM IN MIL-DTL-117, CLASS B, STYLE 2, SIZE: 12 X 12.
3. IDENTIFICATION: IDENTIFY ITEM WITH SEGREGATED PACK NUMBER “6”.

R. PREPARE ONE HARNESS, WIRING (P/N 4995590) ACCORDING TO METHOD 31 AND THE STEPS BELOW:
1. COIL ITEM TO 9 X 9.
2. BAG: HEAT SEAL ITEM IN MIL-DTL-117 CLASS B, STYLE 2, SIZE: 12 X 12.
3. IDENTIFICATION: IDENTIFY WITH SEGREGATED PACK NUMBER “7”.

S. PREPARE ONE SPACER, FAN, PILOT (P/N 3910128) ACCORDING TO METHOD 31 AND THE STEPS BELOW:
1. BAG: HEAT SEAL ITEM IN MIL-DTL-117, CLASS B, STYLE 2, SIZE: 6 X 5.
2. IDENTIFICATION: IDENTIFY ITEM WITH SEGREGATED PACK NUMBER “8”.

T. PREPARE ONE PLUG, PIPE (P/N S-910-B) ACCORDING TO METHOD 33 AND THE STEPS BELOW:
1. BAG: HEAT SEAL ITEM IN MIL-DTL-22020E, SIZE: 3 X 5.
2. IDENTIFICATION: IDENTIFY ITEM WITH SEGREGATED PACK NUMBER “9”.

U. PREPARE FOUR EACH SCREW, HEX FLANGE HEAD CAPS (P/N 3902460) ACCORDING TO METHOD 33 AND THE STEPS BELOW:
1. BAG: HEAT SEAL ITEMS IN MIL-DTL-22020E, SIZE: 3 X 5.
2. IDENTIFICATION: IDENTIFY BAG WITH SEGREGATED PACK NUMBER “10”.

V. PREPARE ONE CLAMP, V BAND (P/N 3903652) ACCORDING TO METHOD 33 AND THE STEPS BELOW:
1. BAG: HEAT SEAL ITEM IN MIL-DTL-22020E, SIZE: 8 X 6.
2. IDENTIFICATION: IDENTIFY ITEM WITH SEGREGATED PACK NUMBER “11”.

W. PREPARE ONE PIPE, EXHAUST OUTLET (P/N 3910992) ACCORDING TO METHOD 33 AND THE STEPS BELOW:
1. CUSHIONING: A-A-59135, SIZE: 12 X 12 X ¼.
2. BAG: HEAT SEAL CUSHIONED ITEM IN MIL-DTL-22020E, SIZE: 17 X 11.
3. IDENTIFICATION: IDENTIFY ITEM WITH SEGREGATED PACK NUMBER “12”.

.

SPECIAL PACKAGING INSTRUCTION

Form Approved -
OMB No. 0704-0188

The public reporting burden for this collection of information is estimated to average 30 days per response, including the time for reviewing instructions, searching existing data sources, gathering and maintaining the data needed, and completing and reviewing the collection of information. Send comments regarding this burden estimate or any other aspect of this collection of information, including suggestions for reducing this burden, to Department of Defense, Washington Headquarters Services, Directorate for Information Operations and Reports (0704-0188), 1215 Jefferson Davis Highway, Suite 1204, Arlington, VA 22202-4302. Respondents should be aware that notwithstanding any other provision of law, no person shall be subject to any penalty for failing to comply with a collection of information if it does not display a currently valid OMB control number. **PLEASE DO NOT RETURN YOUR FORM TO THIS ADDRESS**

1. PART OR DRAWING NO. (CAGE) NOMENCLATURE	2. CODE IDENT	3. SPI NO.
980620 (58785) ENGINE, DIESEL	19207	AK16131455
4. NATIONAL STOCK NUMBER	**5. DATE OF DRAWING**	**6. REVISION**
2815-01-6131455	11236	-

X. PREPARE ONE SHIELD, HEAT (P/N 3934100) ACCORDING TO METHOD 33 AND THE STEPS BELOW:
1. CUSHIONING: A-A-59135, SIZE: 6 X 6 X ¼.
2. BAG: HEAT SEAL ITEM IN MIL-DTL-22020E, SIZE: 6 X 8.
3. IDENTIFICATION: IDENTIFY ITEM WITH SEGREGATED PACK NUMBER “13”.

Y. PREPARE ONE BRACE, EXH OUT CONNECTION (P/N 3999807) ACCORDING TO METHOD 33 AND THE STEPS BELOW:
1. CUSHIONING: A-A-59135, SIZE: 14 X 14 X ¼.
2. BAG: HEAT SEAL ITEM IN MIL-DTL-22020E, SIZE: 12 X 10.
3. IDENTIFICATION: IDENTIFY ITEM WITH SEGREGATED PACK NUMBER “14”.

Z . CONSOLIDATE M THROUGH Z ABOVE ACCORDING TO THE STEPS BELOW:
1. CONTAINER: TYPE: CF, CLASS: DOMESTIC, VARIETY: SW, GRADE: 275 psi, STYLE: RSC, SIZE: 15 X 13 X 5.
2. SEAL CONTAINER WITH TAPE, ASTM-D5486, 2 INCH WIDTH.
3. IDENTIFICATION: IDENTIFY CONTAINER AS “CONTAINS SEGREGATED PACK NUMBERS 1 THROUGH 14”.
4. SECURE CONTAINER TO ENGINE BASE INSIDE OF FOIL BARRIER WITH TAPE, ASTM-D 5330, TYPE I.

ITEM	SIZE	QTY	NOMENCLATURE
	SKID BASE ASSEMBLY		
A	**4 X 4 X 46**	**3**	**SKIDS**
B	**4 X 4 X 38**	**2**	**HEADERS**
C	**2 X 6 X 39-1/2**	**6**	**LOAD-BEARING FLOORBOARDS**
D	**2 X 4 X 39-1/2**	**1**	**LOAD-BEARING FLOORBOARD**
E	**2 X 6 X 46**	**2**	**SLEEPER BOARDS**
F	**2 X 6 X 32**	**2**	**BLOCKING MOUNTS**
G	**3 X 12 X 1/2**	**1**	**BRACKET L-FRONT (EACH STEEL MOUNTING BRACKET IS MACHINE DRILLED TO ACCOMMODATE 2 EACH M12 X 40mm HEX BOLTS)**
H	**3 X 12 X 1/2**	**1**	**BRACKET R-FRONT**
I	**3 X 10-1/2 X 1/2**	**2**	**BRACKET REAR**
J	**1/2 X 6 HARDWARE SET**	**8**	**HARDWARE SET CONSISTS OF 1 PC 1/2 X 6 CARRIAGE BOLT, 1 PC 1/2 FLAT WASHER, 1 PC 1/2 LOCK WASHER, 1 PC 1/2 HEX NUT, 1 PC 3/4 FENDER WASHER**
K	**M12 X 40mm HARDWARE SET (ENGINE MOUNTING)**	**8**	**HARDWARE SET CONSISTS OF 1 PC M12 X 40mm HEX HEAD BOLT, 1 PC M12 LOCK WASHER**
L	**1/2 X 8 HARDWARE SET**	**6**	**HARDWARE SET CONSISTS OF 1 PC 1/2 X 8 CARRIAGE BOLT, 1 PC 1/2 FLAT WASHER, 1 PC 1/2 LOCK WASHER, 1 PC 1/2 HEX NUT, 1 PC 3/4 FENDER WASHER**
M	**3 X 4 X 8**	**6**	**RUBBING STRIPS**

SPECIAL PACKAGING INSTRUCTION

Form Approved -
OMB No. 0704-0188

The public reporting burden for this collection of information is estimated to average 30 days per response, including the time for reviewing instructions, searching existing data sources, gathering and maintaining the data needed, and completing and reviewing the collection of information. Send comments regarding this burden estimate or any other aspect of this collection of information, including suggestions for reducing this burden, to Department of Defense, Washington Headquarters Services, Directorate for Information Operations and Reports (0704-0188), 1215 Jefferson Davis Highway, Suite 1204, Arlington, VA 22202-4302. Respondents should be aware that notwithstanding any other provision of law, no person shall be subject to any penalty for failing to comply with a collection of information if it does not display a currently valid OMB control number. **PLEASE DO NOT RETURN YOUR FORM TO THIS ADDRESS**

1. PART OR DRAWING NO. (CAGE) NOMENCLATURE	2. CODE IDENT	3. SPI NO.
980620 (58785) ENGINE, DIESEL	19207	AK16131455
4. NATIONAL STOCK NUMBER	**5. DATE OF DRAWING**	**6. REVISION**
2815-01-6131455	11236	-

SKID BASE ASSEMBLY

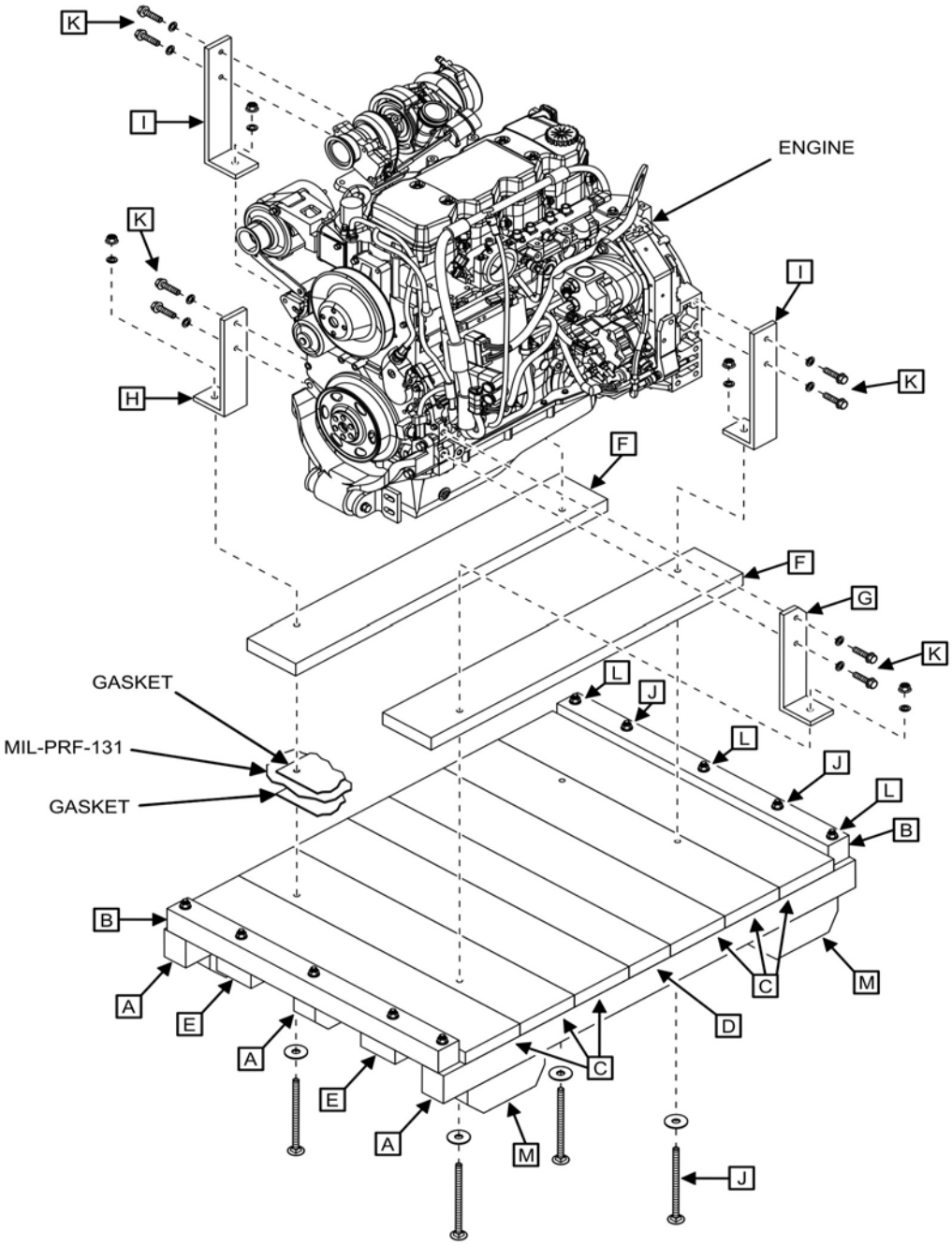

SPECIAL PACKAGING INSTRUCTION

Form Approved -
OMB No. 0704-0188

The public reporting burden for this collection of information is estimated to average 30 days per response, including the time for reviewing instructions, searching existing data sources, gathering and maintaining the data needed, and completing and reviewing the collection of information. Send comments regarding this burden estimate or any other aspect of this collection of information, including suggestions for reducing this burden, to Department of Defense, Washington Headquarters Services, Directorate for Information Operations and Reports (0704-0188), 1215 Jefferson Davis Highway, Suite 1204, Arlington, VA 22202-4302. Respondents should be aware that notwithstanding any other provision of law, no person shall be subject to any penalty for failing to comply with a collection of information if it does not display a currently valid OMB control number. **PLEASE DO NOT RETURN YOUR FORM TO THIS ADDRESS**

1. PART OR DRAWING NO. (CAGE) NOMENCLATURE	2. CODE IDENT	3. SPI NO.
980620 (58785) ENGINE, DIESEL	19207	AK16131455
4. NATIONAL STOCK NUMBER	**5. DATE OF DRAWING**	**6. REVISION**
2815-01-6131455	11236	-

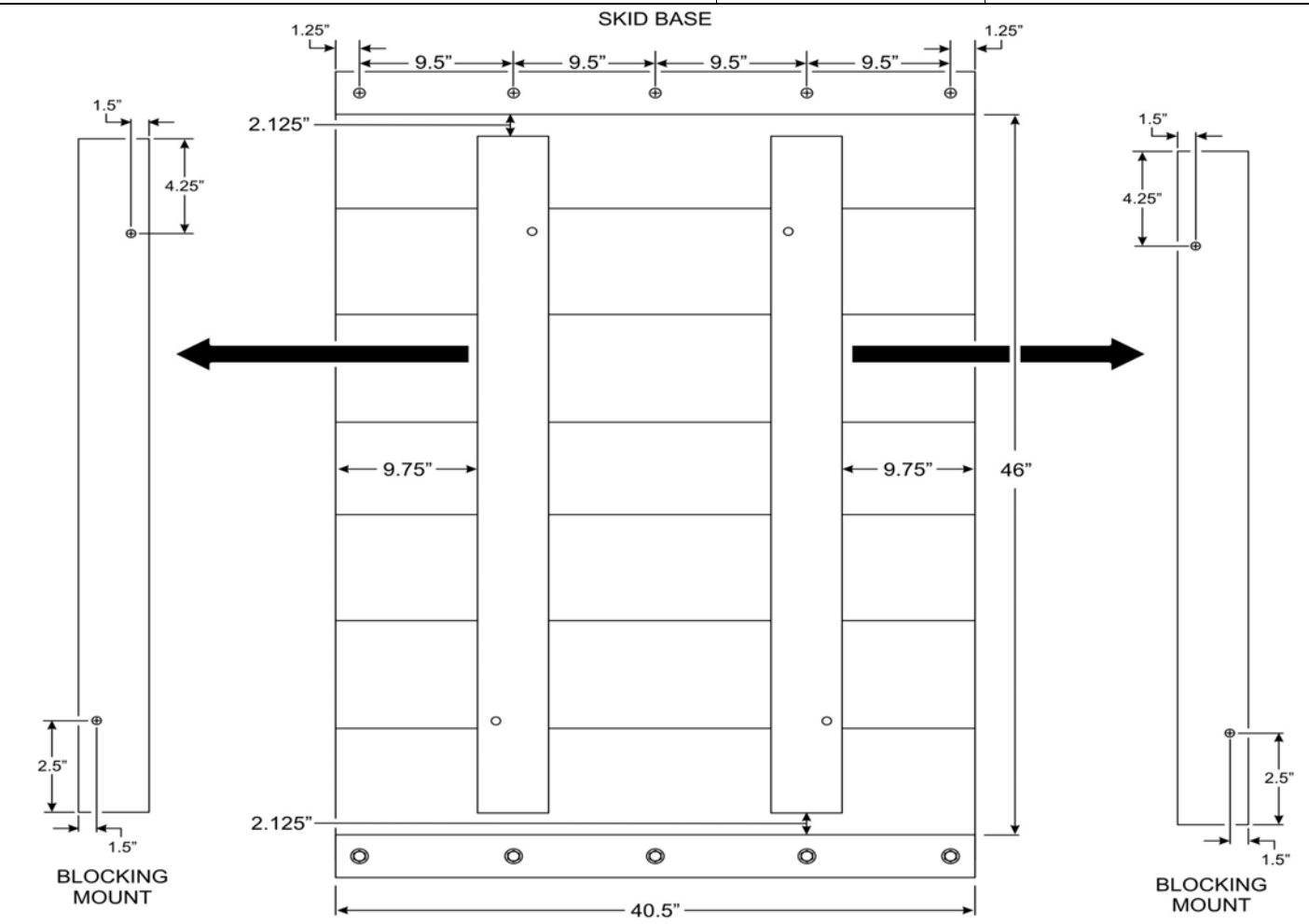

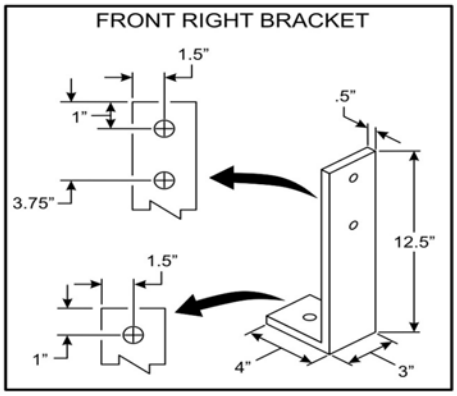

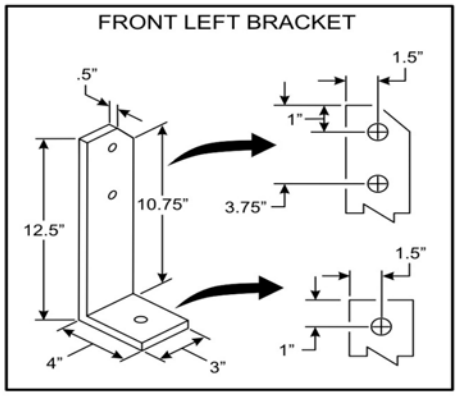

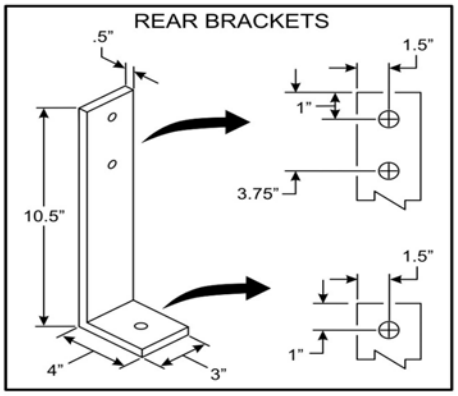

SPECIAL PACKAGING INSTRUCTION

Form Approved -
OMB No. 0704-0188

The public reporting burden for this collection of information is estimated to average 30 days per response, including the time for reviewing instructions, searching existing data sources, gathering and maintaining the data needed, and completing and reviewing the collection of information. Send comments regarding this burden estimate or any other aspect of this collection of information, including suggestions for reducing this burden, to Department of Defense, Washington Headquarters Services, Directorate for Information Operations and Reports (0704-0188), 1215 Jefferson Davis Highway, Suite 1204, Arlington, VA 22202-4302. Respondents should be aware that notwithstanding any other provision of law, no person shall be subject to any penalty for failing to comply with a collection of information if it does not display a currently valid OMB control number. **PLEASE DO NOT RETURN YOUR FORM TO THIS ADDRESS**

1. PART OR DRAWING NO. (CAGE) NOMENCLATURE	2. CODE IDENT	3. SPI NO.
980620 (58785) ENGINE, DIESEL	19207	AK16131455
4. NATIONAL STOCK NUMBER	**5. DATE OF DRAWING**	**6. REVISION**
2815-01-6131455	11236	-

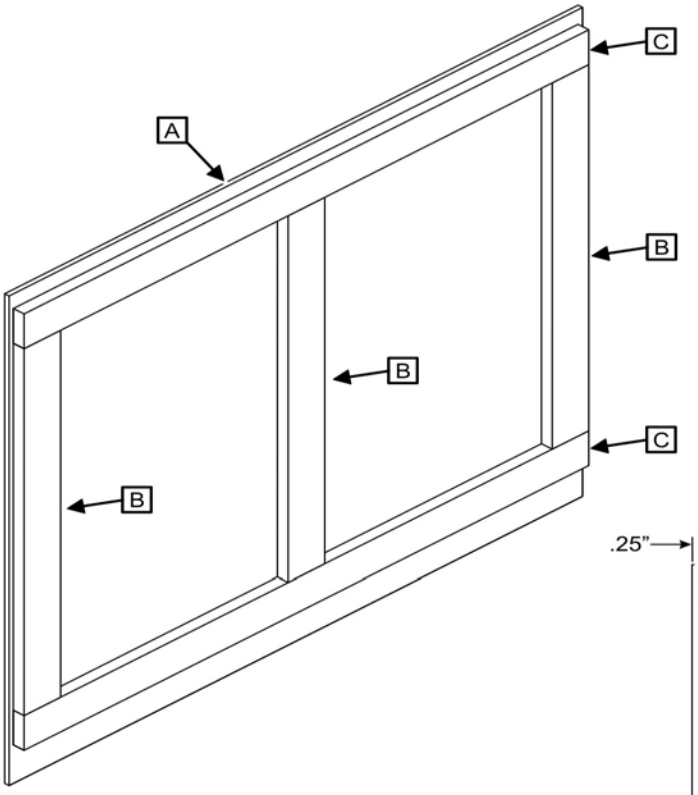

FRONT PANEL ASSEMBLY

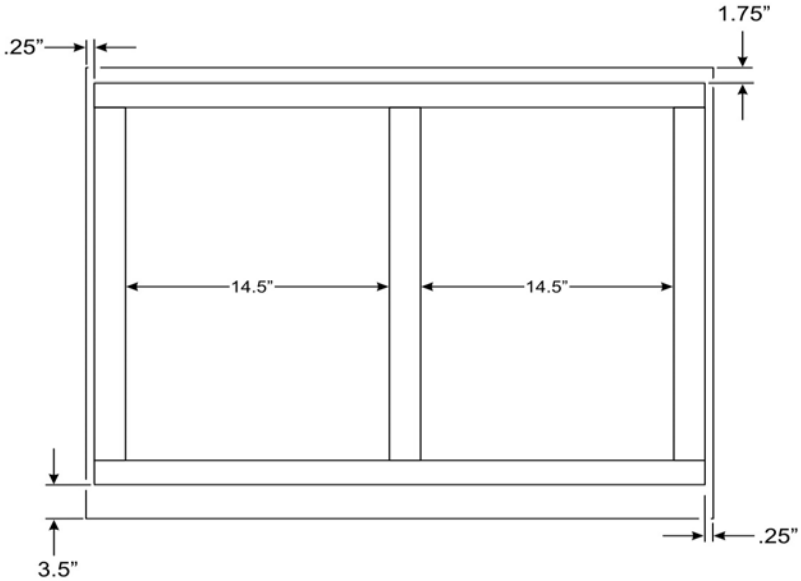

FRONT PANEL ASSEMBLY

A	**45-1/2 X 40-1/2 X 1/4**	**1**	**PLYWOOD**
B	**1 X 4 X 33**	**3**	**CLEAT**
C	**1 X 4 X 39-1/2**	**2**	**CLEAT**

SPECIAL PACKAGING INSTRUCTION

Form Approved -
OMB No. 0704-0188

The public reporting burden for this collection of information is estimated to average 30 days per response, including the time for reviewing instructions, searching existing data sources, gathering and maintaining the data needed, and completing and reviewing the collection of information. Send comments regarding this burden estimate or any other aspect of this collection of information, including suggestions for reducing this burden, to Department of Defense, Washington Headquarters Services, Directorate for Information Operations and Reports (0704-0188), 1215 Jefferson Davis Highway, Suite 1204, Arlington, VA 22202-4302. Respondents should be aware that notwithstanding any other provision of law, no person shall be subject to any penalty for failing to comply with a collection of information if it does not display a currently valid OMB control number. **PLEASE DO NOT RETURN YOUR FORM TO THIS ADDRESS**

1. PART OR DRAWING NO. (CAGE) NOMENCLATURE	2. CODE IDENT	3. SPI NO.
980620 (58785) ENGINE, DIESEL	19207	AK16131455
4. NATIONAL STOCK NUMBER	**5. DATE OF DRAWING**	**6. REVISION**
2815-01-6131455	11236	-

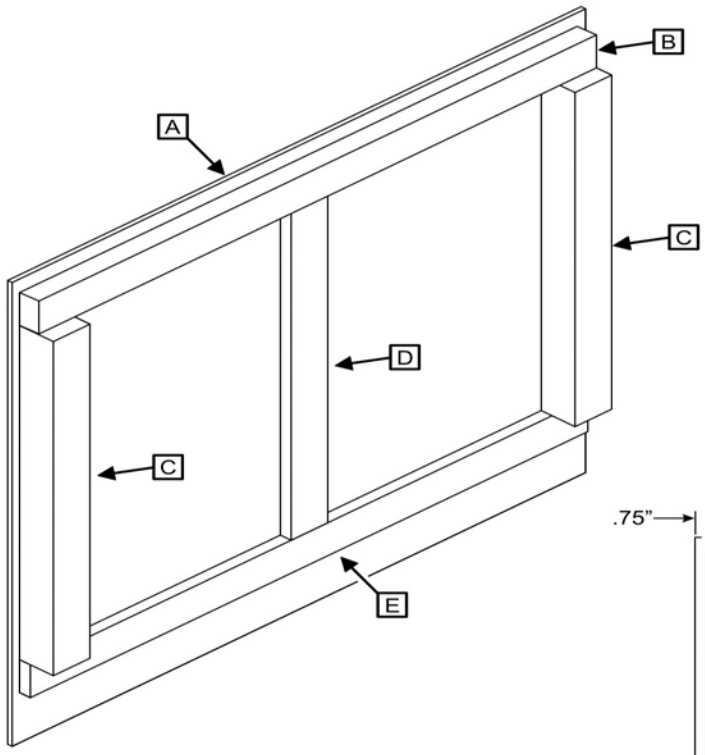

RIGHT PANEL ASSEMBLY

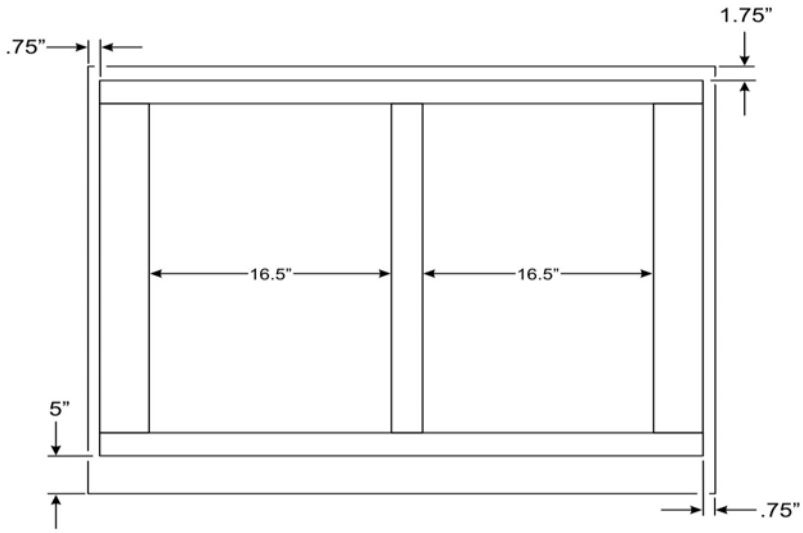

RIGHT PANEL ASSEMBLY

A	**49 X 45 X 1/4**	**1**	**PLYWOOD**
B	**2 X 4 X 43-1/2**	**1**	**CLEAT**
C	**4 X 4 X 35**	**2**	**SUPPORT**
D	**1 X 4 X 35**	**1**	**CLEAT**
E	**1 X 4 X 43-1/2**	**1**	**CLEAT**

SPECIAL PACKAGING INSTRUCTION

Form Approved -
OMB No. 0704-0188

The public reporting burden for this collection of information is estimated to average 30 days per response, including the time for reviewing instructions, searching existing data sources, gathering and maintaining the data needed, and completing and reviewing the collection of information. Send comments regarding this burden estimate or any other aspect of this collection of information, including suggestions for reducing this burden, to Department of Defense, Washington Headquarters Services, Directorate for Information Operations and Reports (0704-0188), 1215 Jefferson Davis Highway, Suite 1204, Arlington, VA 22202-4302. Respondents should be aware that notwithstanding any other provision of law, no person shall be subject to any penalty for failing to comply with a collection of information if it does not display a currently valid OMB control number. **PLEASE DO NOT RETURN YOUR FORM TO THIS ADDRESS**

1. PART OR DRAWING NO. (CAGE) NOMENCLATURE	2. CODE IDENT	3. SPI NO.
980620 (58785) ENGINE, DIESEL	19207	AK16131455
4. NATIONAL STOCK NUMBER	**5. DATE OF DRAWING**	**6. REVISION**
2815-01-6131455	11236	-

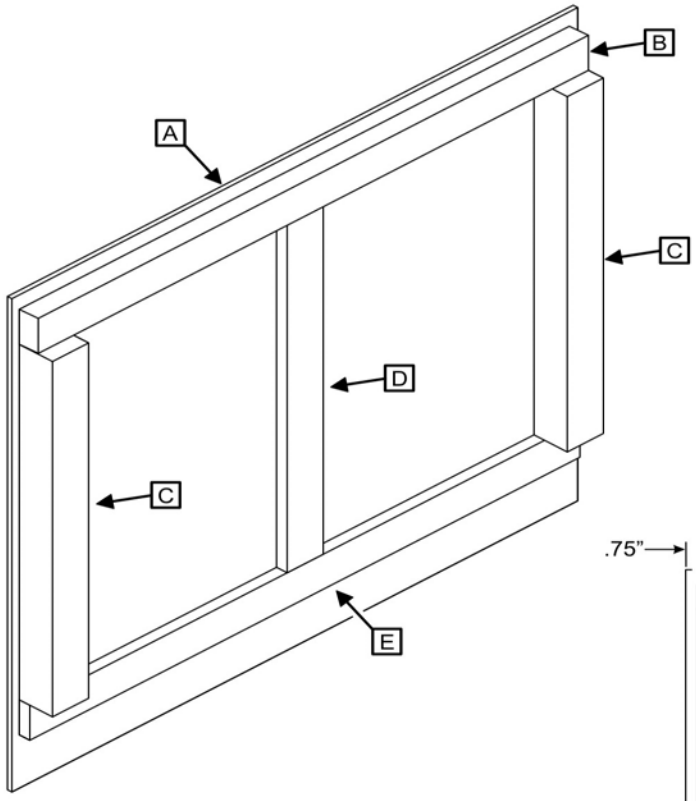

LEFT PANEL ASSEMBLY

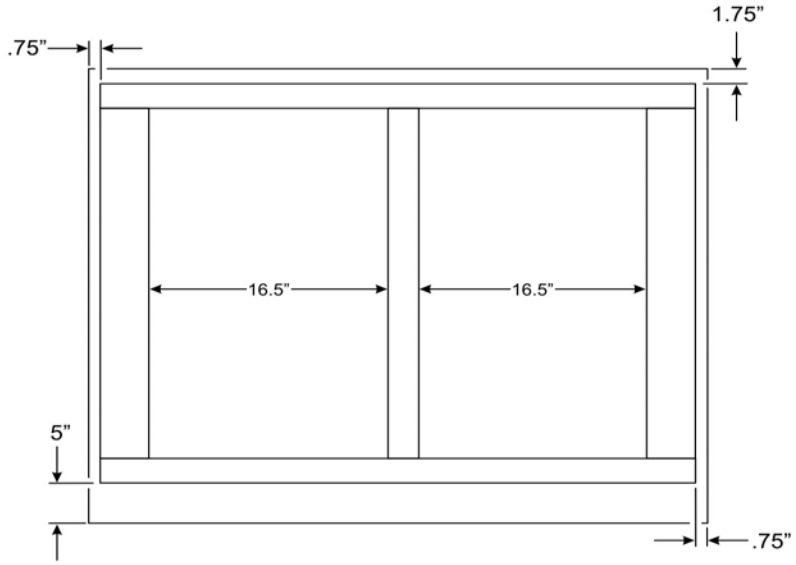

LEFT PANEL ASSEMBLY

A	**49 X 45 X 1/4**	**1**	**PLYWOOD**
B	**2 X 4 X 43-1/2**	**1**	**CLEAT**
C	**4 X 4 X 35**	**2**	**SUPPORT**
D	**1 X 4 X 35**	**1**	**CLEAT**
E	**1 X 4 X 43-1/2**	**1**	**CLEAT**

SPECIAL PACKAGING INSTRUCTION

Form Approved -
OMB No. 0704-0188

The public reporting burden for this collection of information is estimated to average 30 days per response, including the time for reviewing instructions, searching existing data sources, gathering and maintaining the data needed, and completing and reviewing the collection of information. Send comments regarding this burden estimate or any other aspect of this collection of information, including suggestions for reducing this burden, to Department of Defense, Washington Headquarters Services, Directorate for Information Operations and Reports (0704-0188), 1215 Jefferson Davis Highway, Suite 1204, Arlington, VA 22202-4302. Respondents should be aware that notwithstanding any other provision of law, no person shall be subject to any penalty for failing to comply with a collection of information if it does not display a currently valid OMB control number. **PLEASE DO NOT RETURN YOUR FORM TO THIS ADDRESS**

1. PART OR DRAWING NO. (CAGE) NOMENCLATURE	2. CODE IDENT	3. SPI NO.
980620 (58785) ENGINE, DIESEL	19207	AK16131455
4. NATIONAL STOCK NUMBER	**5. DATE OF DRAWING**	**6. REVISION**
2815-01-6131455	11236	-

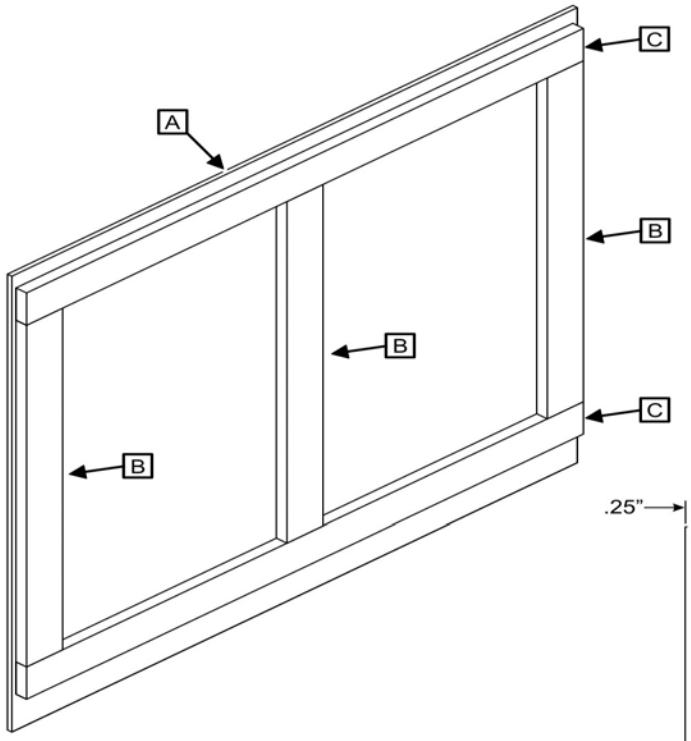

BACK PANEL ASSEMBLY

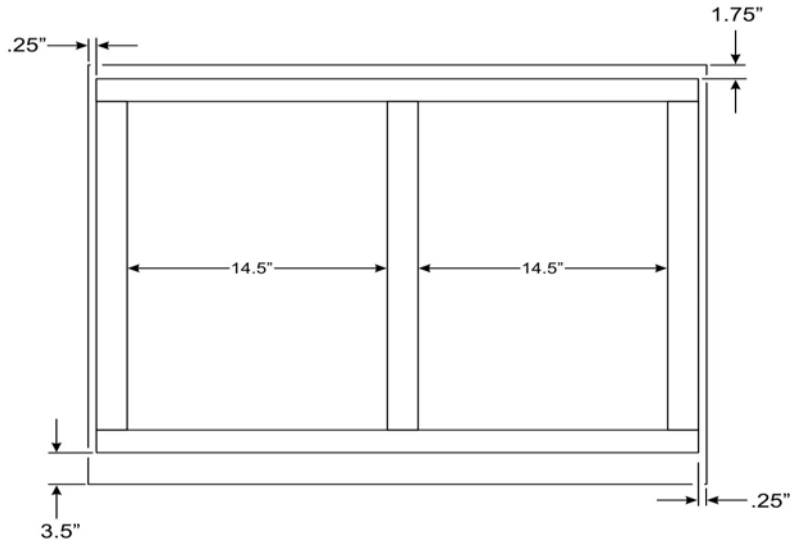

BACK PANEL ASSEMBLY

A	**45 X 40-1/2**	**1**	**PLYWOOD**
B	**1 X 4 X 39-1/2**	**2**	**CLEAT**
C	**1 X 4 X 33**	**3**	**CLEAT**

SPECIAL PACKAGING INSTRUCTION

Form Approved -
OMB No. 0704-0188

The public reporting burden for this collection of information is estimated to average 30 days per response, including the time for reviewing instructions, searching existing data sources, gathering and maintaining the data needed, and completing and reviewing the collection of information. Send comments regarding this burden estimate or any other aspect of this collection of information, including suggestions for reducing this burden, to Department of Defense, Washington Headquarters Services, Directorate for Information Operations and Reports (0704-0188), 1215 Jefferson Davis Highway, Suite 1204, Arlington, VA 22202-4302. Respondents should be aware that notwithstanding any other provision of law, no person shall be subject to any penalty for failing to comply with a collection of information if it does not display a currently valid OMB control number. **PLEASE DO NOT RETURN YOUR FORM TO THIS ADDRESS**

1. PART OR DRAWING NO. (CAGE) NOMENCLATURE	2. CODE IDENT	3. SPI NO.
980620 (58785) ENGINE, DIESEL	19207	AK16131455
4. NATIONAL STOCK NUMBER	**5. DATE OF DRAWING**	**6. REVISION**
2815-01-6131455	11236	-

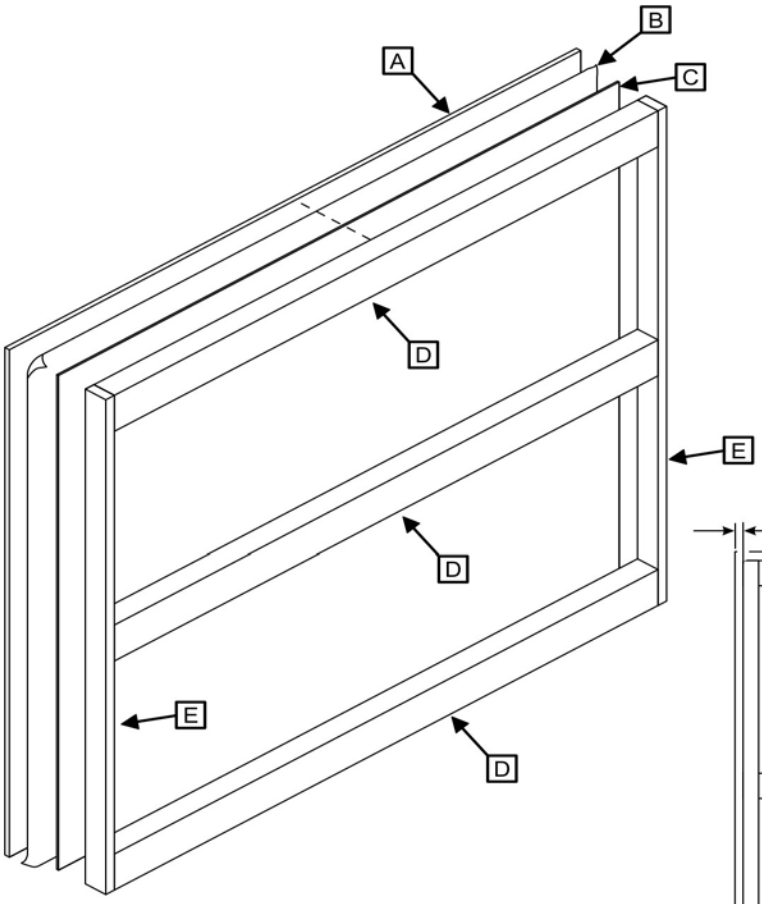

TOP PANEL ASSEMBLY

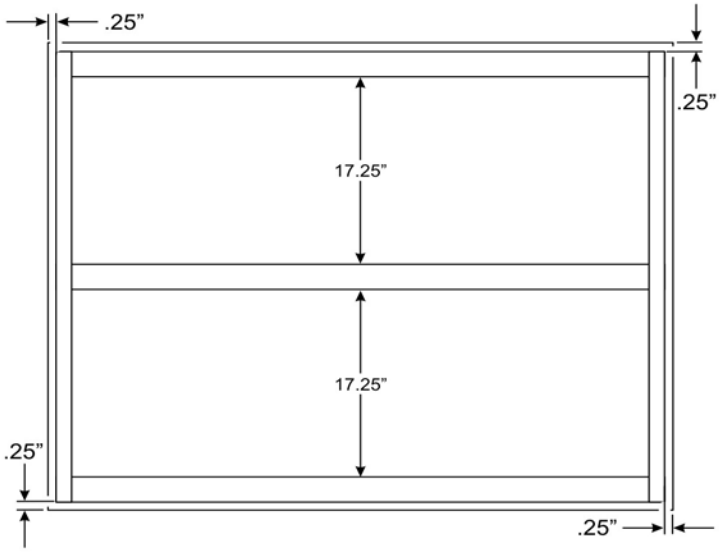

TOP PANEL ASSEMBLY

A	**45-3/4 X 40-1/2 X 1/4**	**1**	**PLYWOOD**
B	**46 X 39-1/2 X 4 MIL**	**1**	**POLYETHYLENE FILM**
C	**45 X 39-1/2 X 1/4**	**1**	**PARTICLEBOARD**
D	**2 X 4 X 38**	**3**	**CLEAT**
E	**1 X 2 X 45**	**2**	**CLEAT**

SPECIAL PACKAGING INSTRUCTION

Form Approved -
OMB No. 0704-0188

The public reporting burden for this collection of information is estimated to average 30 days per response, including the time for reviewing instructions, searching existing data sources, gathering and maintaining the data needed, and completing and reviewing the collection of information. Send comments regarding this burden estimate or any other aspect of this collection of information, including suggestions for reducing this burden, to Department of Defense, Washington Headquarters Services, Directorate for Information Operations and Reports (0704-0188), 1215 Jefferson Davis Highway, Suite 1204, Arlington, VA 22202-4302. Respondents should be aware that notwithstanding any other provision of law, no person shall be subject to any penalty for failing to comply with a collection of information if it does not display a currently valid OMB control number. **PLEASE DO NOT RETURN YOUR FORM TO THIS ADDRESS**

1. PART OR DRAWING NO. (CAGE) NOMENCLATURE	2. CODE IDENT	3. SPI NO.
980620 (58785) ENGINE, DIESEL	19207	AK16131455
4. NATIONAL STOCK NUMBER	**5. DATE OF DRAWING**	**6. REVISION**
2815-01-6131455	11236	-

CLOSURE HARDWARE

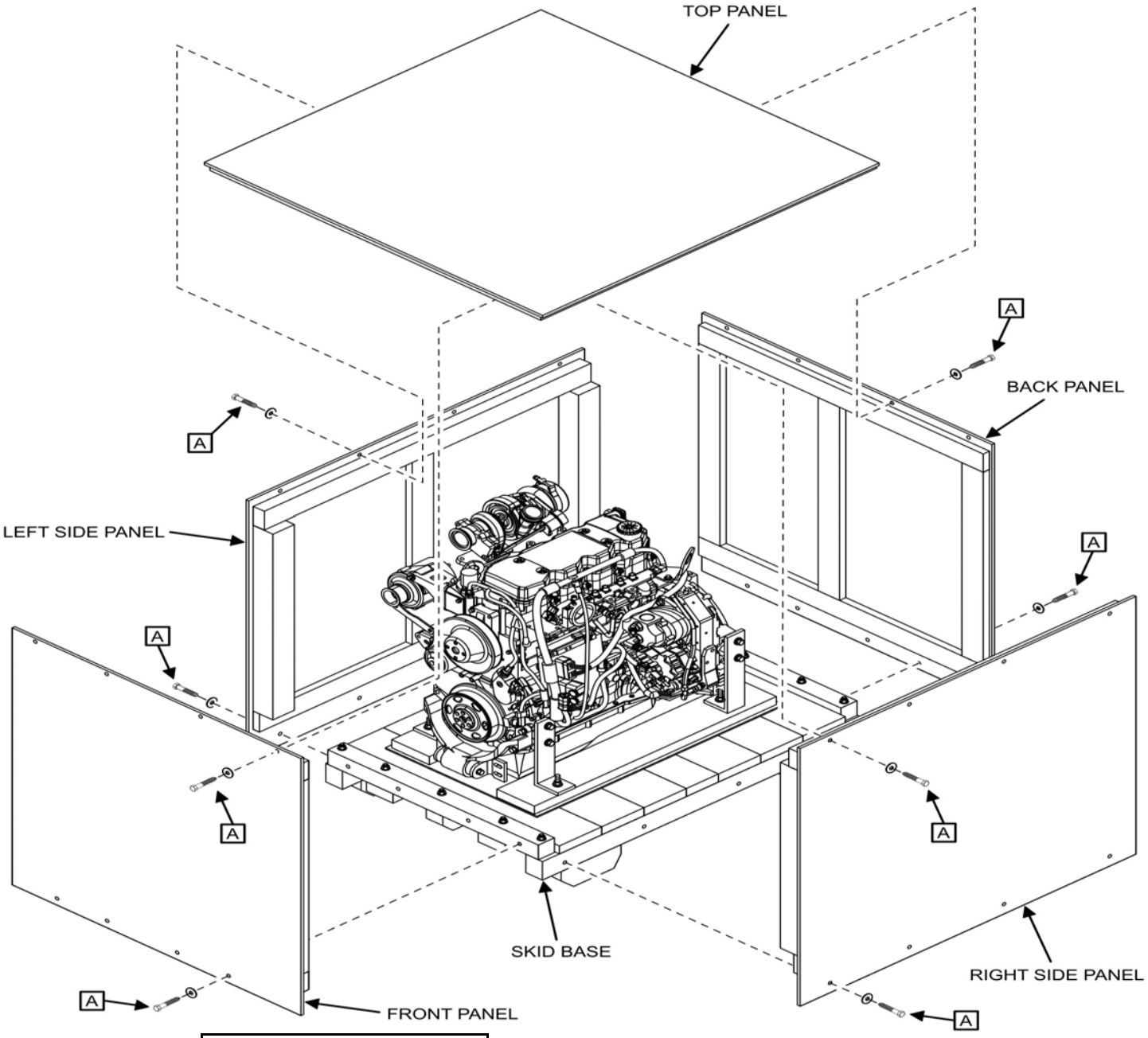

CLOSURE HARDWARE

A	**3/8 X 3-1/2 HARDWARE SET**	**48**	**HARDWARE SET CONSISTS OF 1 PC 3/8 X 3-1/2 LAG SCREW, 1 PC 3/8 FLAT WASHER**