Proposed Modification of Statement of Work for Multi-Chip Packaging of Silicon Carbide Pressure/Temperature Sensors and Amplifier

- Silicon Carbide (SiC) integrated pressure/temperature sensors will be provided to the vendor for attachment to the aluminum nitride (AlN) circuit board (see Fig. 1) in a Multi-Chip Module (MCM) configuration.
- The circuit board shall be made of AlN with the coefficient of thermal expansion of not more than 4 ppm/C, closely matching to SiC.
- On the circuit board, Au-plated Nickel pins shall be inserted into the blind holes and securely Au attached.
- The AlN receptacle (Fig, 2) shall be hermetically brazed to Kovar tube and withstand temperature up to 700 C.
- The AlN circuit board (Fig. 1) with sensor and pins shall be delivered to customer.
- The hermetically brazed AlN receptacle shall be delivered to customer.
- Delivery to be on or before 12/31/26 to NASA Glenn Research Center, 21000 Brook park Road, Mail Stop 77-2, Cleveland OH 44149.

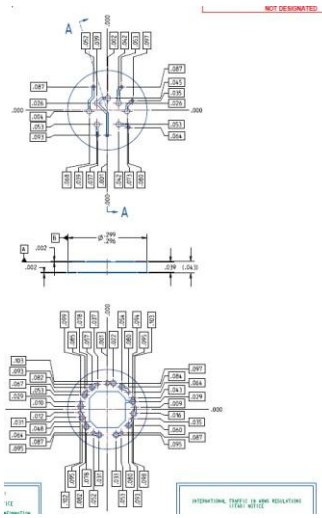

Fig. 2: Circuit Board.

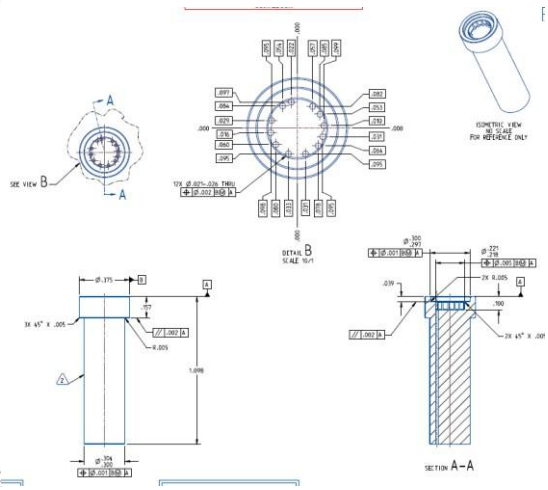

Fig. 1: Receptacle and body

Statement C: Distribution authorized to U.S. Government agencies and their contractors; Export Controlled; MAY 6, 2024. Other requests for this document shall be referred to NATIONAL AERONAUTICS AND SPACE ADMINISTRATION/TRANSFORMSTIONAL AERONAUTICS CONCEPTS PROGRAM/TRANSFORMATIONAL TOOLS AND TECHNOLOGIES PROJECT

WARNING – This document contains technical data whose export is restricted by the Arms Export Control Act (Section 2751 of Title 22, U.S.C.) or the Export Control Reform Act of 2018 (Chapter 58 Sections 4801-4852 of Title 50, U.S.C). Violations of these export laws are subject to severe criminal penalties. Disseminate in accordance with provisions of DoD Directive 5230.25 and DoD Instruction 2040.02.

DESTRUCTION NOTICE - For classified documents, follow the procedures in DoD 5200.22-M, National Industrial Security Program Manual, Chapter 5, Section 7. For unclassified, limited documents, destroy by any method that will prevent disclosure of contents or reconstruction of the document.