U.S. COAST GUARD
CIVIL ENGINEERING OFFICE
CEU OAKLAND

20041934

REPLACE ATON COLUMBIA RIVER

COLUMBIA RIVER, OR

PROJECT DRAWING INDEX		
SHEET ID	SHEET #	SHEET TITLE
G-001	1	COVER SHEET
ATON-01	2	SINGLE PIPE PILE BEACON STRUCTURE
ATON-03	3	3 PIPE PILE BEACON STRUCTURE
ATON-04	4	3 PIPE PILE RANGES STRUCTURE
ATON-06.1	5	PEDESTAL STRUCTURES AND BASES
ATON-06.2	6	4 PIPE PILE 10'X10' PLATFORM HANDRAILS
ATON-06.3	7	4 PIPE PILE 10'X10' PLATFORM DETAILS
ATON-08.1	8	7'X7' STRUCTURAL TOWER ELEVATION & PLATFORM
ATON-08.2	9	7'X7' STRUCTURAL TOWER TOWER PARTS
ATON-08.3	10	7'X7' STRUCTURAL TOWER TOWER PARTS
ATON-08.4	11	7'X7' STRUCTURAL TOWER TOWER & LADDER LEGS
ATON-08.5	12	7'X7' STRUCTURAL TOWER PLATFORM PARTS
ATON-08.6	13	7'X7' STRUCTURAL TOWER TOWER PARTS
ATON-08.7	14	7'X7' STRUCTURAL TOWER TALL TOWERS
ATON-09.1	15	5'X5' PLATFORM
ATON-09.2	16	REDUCED HEADER SYSTEM
ATON-09.3	17	7'X7' PLATFORMS
ATON-11	18	LADDER DETAILS
ATON 12-1	19	RANGE BOARD FRAMES PILE STRUCTURES
ATON 12-2	20	RANGE BOARD FRAMES PILE STRUCTURES
ATON 12-3	21	RANGE BOARD FRAMES TOWER STRUCTURES
ATON 12-4	22	RANGE BOARD FRAMES TOWER STRUCTURES
ATON-13	23	DAYBOARD MOUNTING DETAILS
ATON-14	24	SAFETY CLIMB INSTALLATION

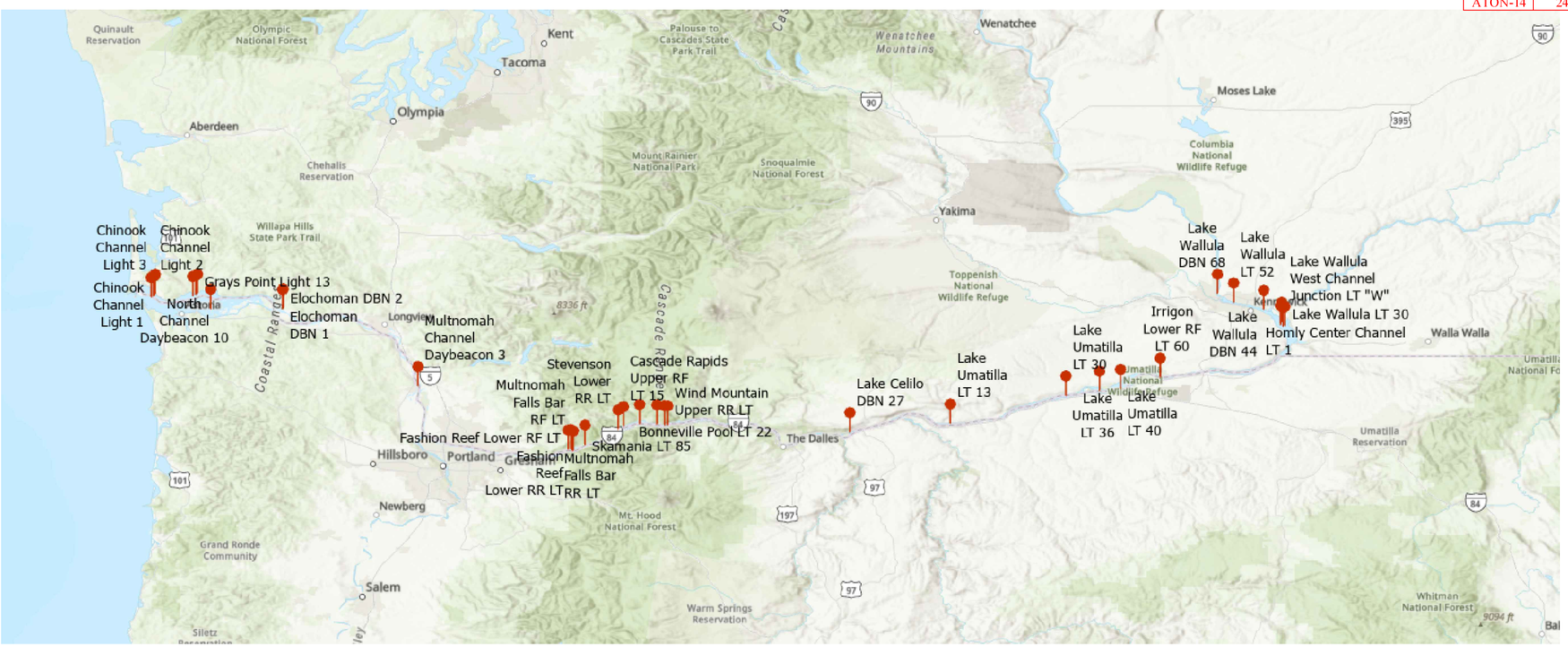

VICINITY MAP
SCALE: NTS

PLAN NORTH
TRUE N

SOLICITATION NO.: N/A

CONTRACT NO.: N/A

VOLUME X

STEVEN F OSGOOD
APPROVING OFFICIAL — DATE: 2026.04.08 10:03:33 -07'00'

STEVEN F OSGOOD
TECHNICAL DIRECTOR

TOMCO.JOEL.EDWARD.1384908795
JOEL TOMCO
BRANCH CHIEF
Digitally signed by TOMCO.JOEL.EDWARD.1384908795
Date: 2026.04.03 10:10:55 -07'00'

U.S.C.G.
U.S. COAST GUARD
CIVIL ENGINEERING

MARK	DESCRIPTION	DATE
	FINAL	JUNE 2025

MEASUREMENT BAR: = 1" (HALF SIZE = 1/2")

AE COMPANY:
AE PROJECT NO.:
CONSULTING A/E:

USCG CIVIL ENGINEERING UNIT, OAKLAND
1301 CLAY STREET SUITE 700N
OAKLAND, CA 94612-5203

USCG PROJECT MANAGER:
ACEBO, BENJAMIN, LT/G

DRAWN BY:
DESIGNED BY: ACEBO, BENJAMIN, LT/G
CHECKED BY:
EDITED BY:

USCG PROJECT NUMBER 20041934
USCG DRAWING SERIES NUMBER 20041934
USCG FILENAME g001cracpcp.dwg
SHEET 01 OF 07

REPLACE ATON COLUMBIA RIVER
ANT COOS BAY
COOS BAY, OR

GENERAL
COVER SHEET

SHEET ID
Title Sheet
G-001

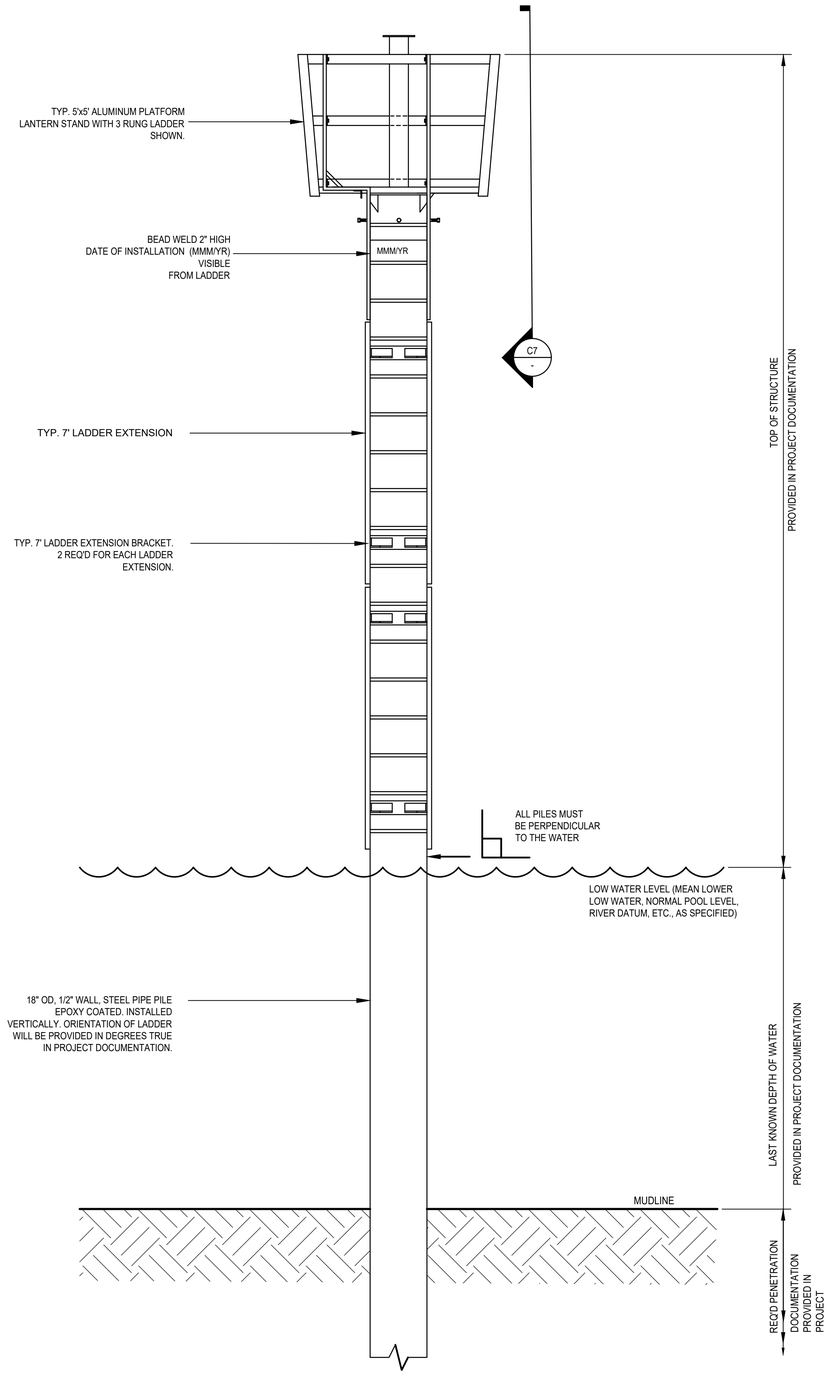

A1 ELEVATION OF LADDER SIDE

SCALE: 1/2"=1-0"

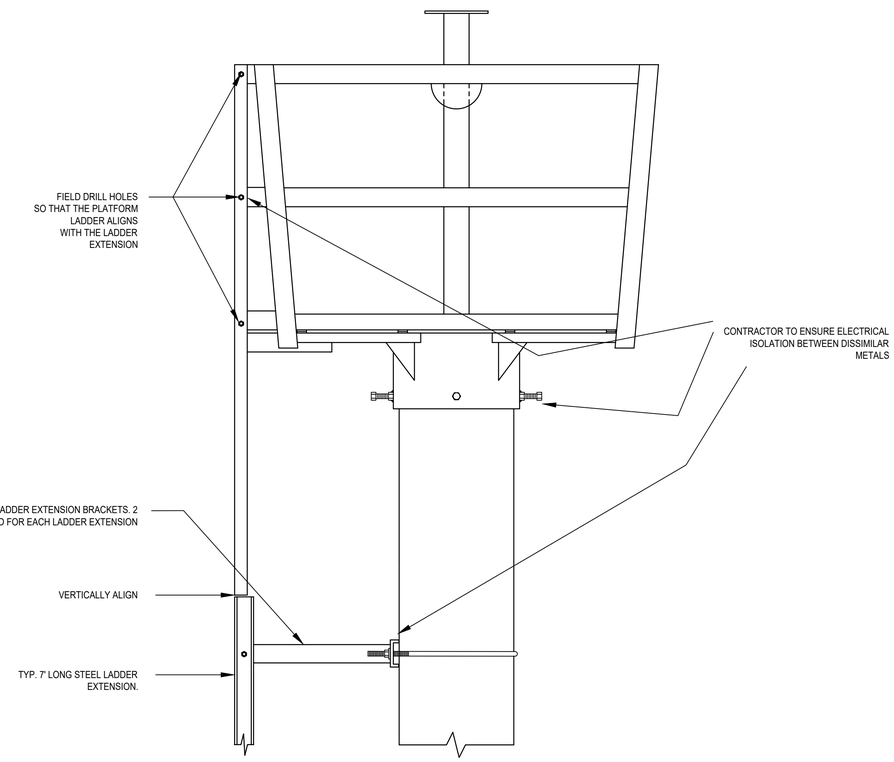

C7 CONNECTION TO SINGLE PILE

SCALE: 1"=1-0"

GENERAL NOTES

1. SHOWN WITH A 5' X 5' ALUMINUM PLATFORM.
2. A 7' X 7' ALUMINUM PLATFORM OR REDUCED HEADER MAY AT TIMES BE SPECIFIED IN THE PROJECT SPECIFICATIONS.

US COAST GUARD
CIVIL ENGINEERING

MARK	DESCRIPTION	DATE
	AS-BUILT	SEP 2018
	FINAL DESIGN	APR 2018
	95% DESIGN	APR 2018
	65% DESIGN	APR 2018
	35% DESIGN	FEB 2018

MEASUREMENT BAR: = 1" (HALF SIZE = 1/2")

A/E COMPANY:
A/E DESIGN COMPANY NAME
AE DESIGN COMPANY CITY, STATE
AE DESIGN COMPANY'S PHONE NUMBER
A/E PROJECT NUMBER
CONSULTING A/E:
CONSULTING COMPANY NAME
CONSULTANT'S CITY, STATE

USCG PROJECT NUMBER
USCG PROJECT NUMBER
USCG DRAWING SERIES NUMBER
P7 - USCG DRAWING NUMBER
USCG FILENAME
USCG DWG NUM + SHT IT.dwg
SHEET 00 OF 00

USCG CIVIL ENGINEERING UNIT, OAKLAND
1301 CLAY STREET SUITE 700N
OAKLAND, CA 94612-5203
USCG PROJECT MANAGER:
LT I.G. BENJAMIN ACEBO
DESIGNED BY:
DRAWN BY:
EDITED BY:
CHECKED BY:

U.S COAST GUARD STD ATONS
CEU OAKLAND
OAKLAND CA
PEDESTAL STRUCTURES & BASES
SINGLE PIPE PILE BEACON STRUCTURE

SHEET ID
ATON-STD-01

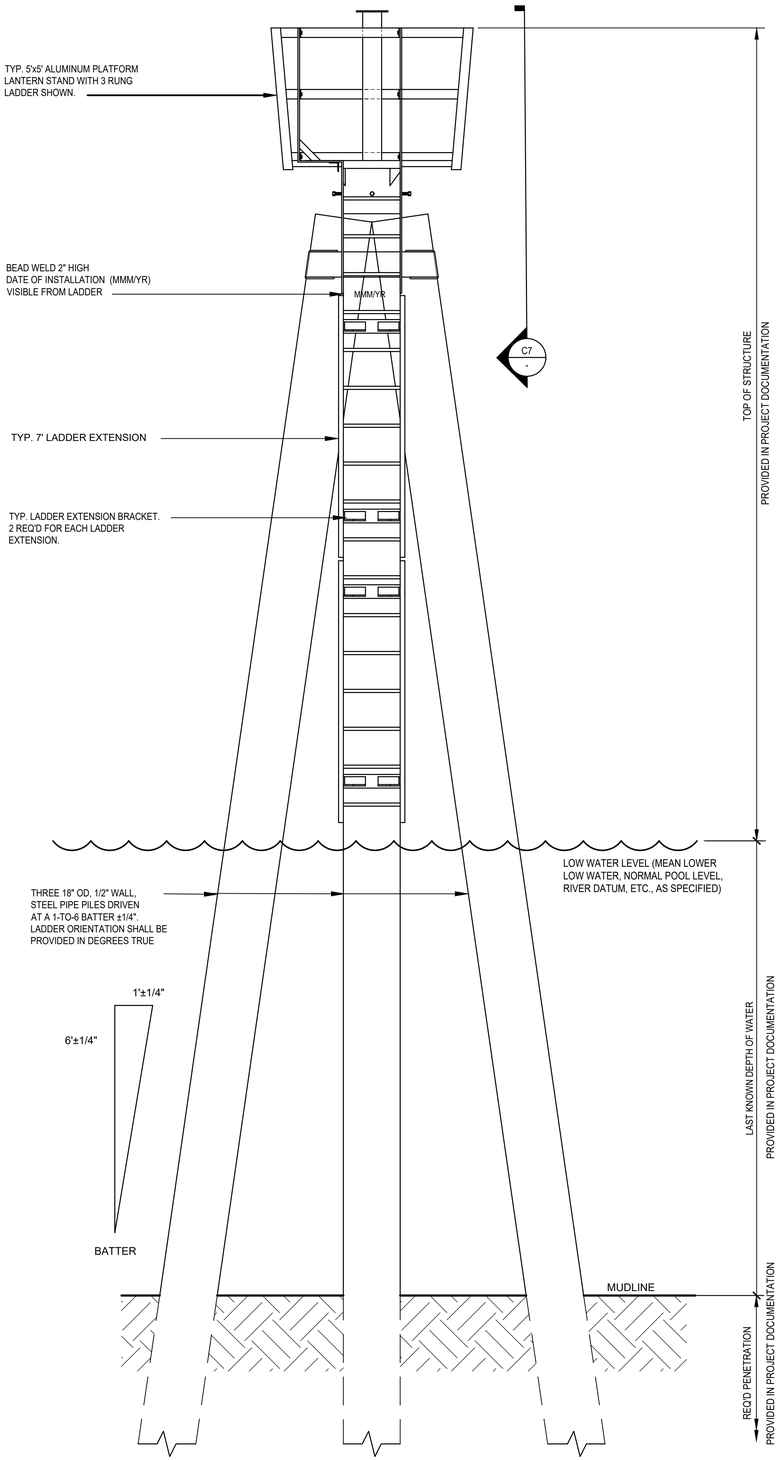

A1 ELEVATION OF LADDER SIDE
SCALE: 1/2"=1-0"

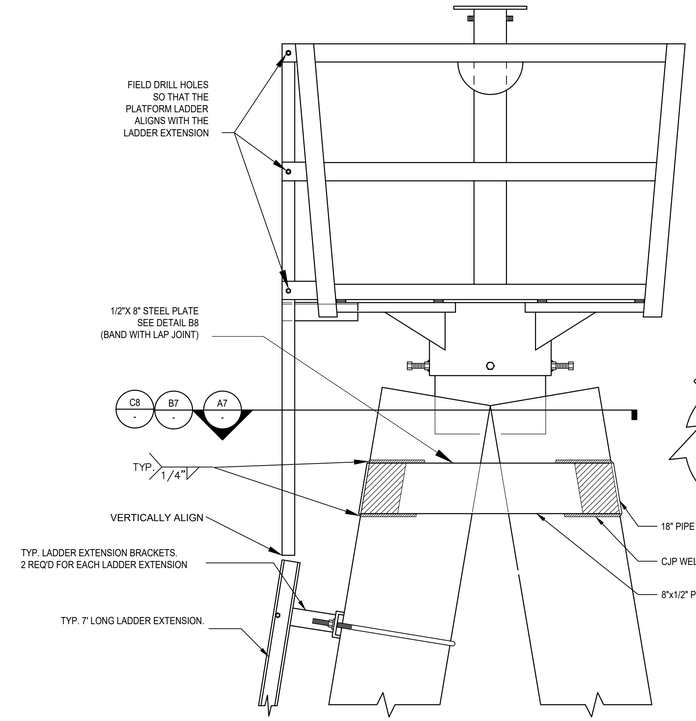

C7 DETAIL: CONNECTION TO DOLPHIN
SCALE: 1"=1-0"

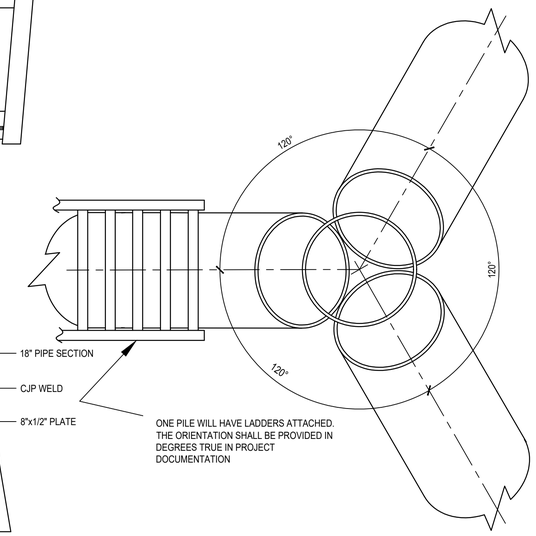

C8 DETAIL: THREE PILE ORIENTATION
SCALE: 1"=1-0"

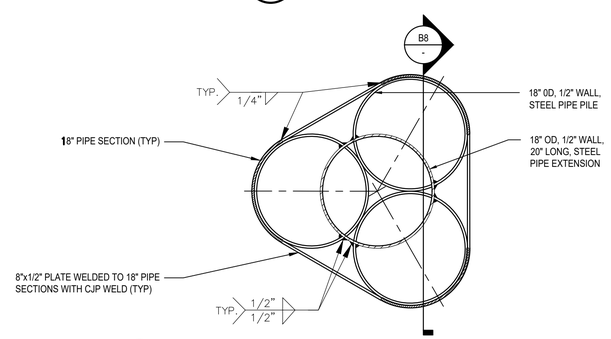

B7 OPTION 1: PLATES WELDED TO CUT 18" PIPE SECTIONS
SCALE: 1"=1-0"

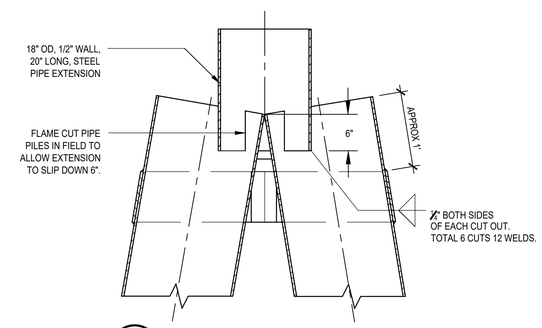

B8 SECTION: TOP OF DOLPHIN
SCALE: 1"=1-0"

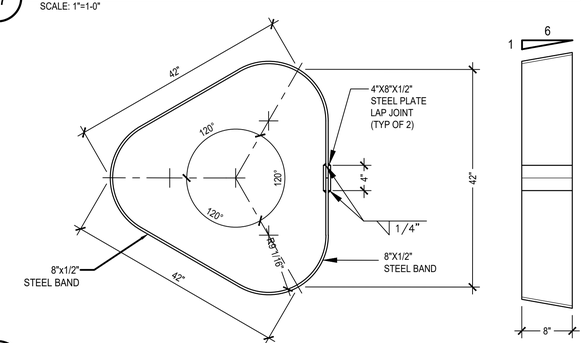

A7 OPTION 2: CONTINUOUS STEEL BAND WITH LAP JOINT
SCALE: 1"=1-0"

GENERAL NOTES

1. SHOWN WITH A 5' X 5' ALUMINUM PLATFORM.
2. A 7' X 7' ALUMINUM PLATFORM OR REDUCED HEADER MAY AT TIMES BE SPECIFIED IN THE PROJECT SPECIFICATIONS.
3. STEEL BAND MAY BE EITHER A WRAPPED STEEL BAND WITH PLATE LAP JOINT, OR PLATES WELDED TO 18" PIPE SECTIONS. SEE OPTIONS 1 AND 2.
4. CONTRACTOR TO ENSURE ELECTRICAL ISOLATION OF DISSIMILAR METALS

US COAST GUARD CIVIL ENGINEERING

MARK	DESCRIPTION	DATE
	AS-BUILT	SEP 2018
	FINAL DESIGN	APR 2018
	95% DESIGN	APR 2018
	65% DESIGN	APR 2018
	35% DESIGN	FEB 2018

MEASUREMENT BAR: = 1" (HALF SIZE = 1/2")

A/E COMPANY:
A/E DESIGN COMPANY NAME
AE DESIGN COMPANY CITY, STATE
AE DESIGN COMPANY'S PHONE NUMBER
A/E PROJECT NUMBER
CONSULTING A/E:
CONSULTING COMPANY NAME
CONSULTANT'S CITY, STATE

USCG CIVIL ENGINEERING UNIT, OAKLAND
1301 CLAY STREET SUITE 700N
OAKLAND, CA 94612-5203

USCG PROJECT MANAGER:
LT.G BENJAMIN ACEBO

USCG PROJECT NUMBER
USCG PROJECT NUMBER
USCG DRAWING SERIES NUMBER
P.1 - USCG DRAWING NUMBER
USCG FILENAME
CEUO_ATON-STD-01.dwg
SHEET 00 OF 00

DESIGNED BY:
DRAWN BY:
DESIGNED BY:
DRAWN BY:
EDITED BY:
CHECKED BY:
EDITED BY
CHECKED BY

U.S COAST GUARD STD ATONS
CEU OAKLAND
OAKLAND CA

PEDESTAL STRUCTURES & BASES
3 PIPE PILE BEACON STRUCTURE

SHEET ID
ATON-STD-03

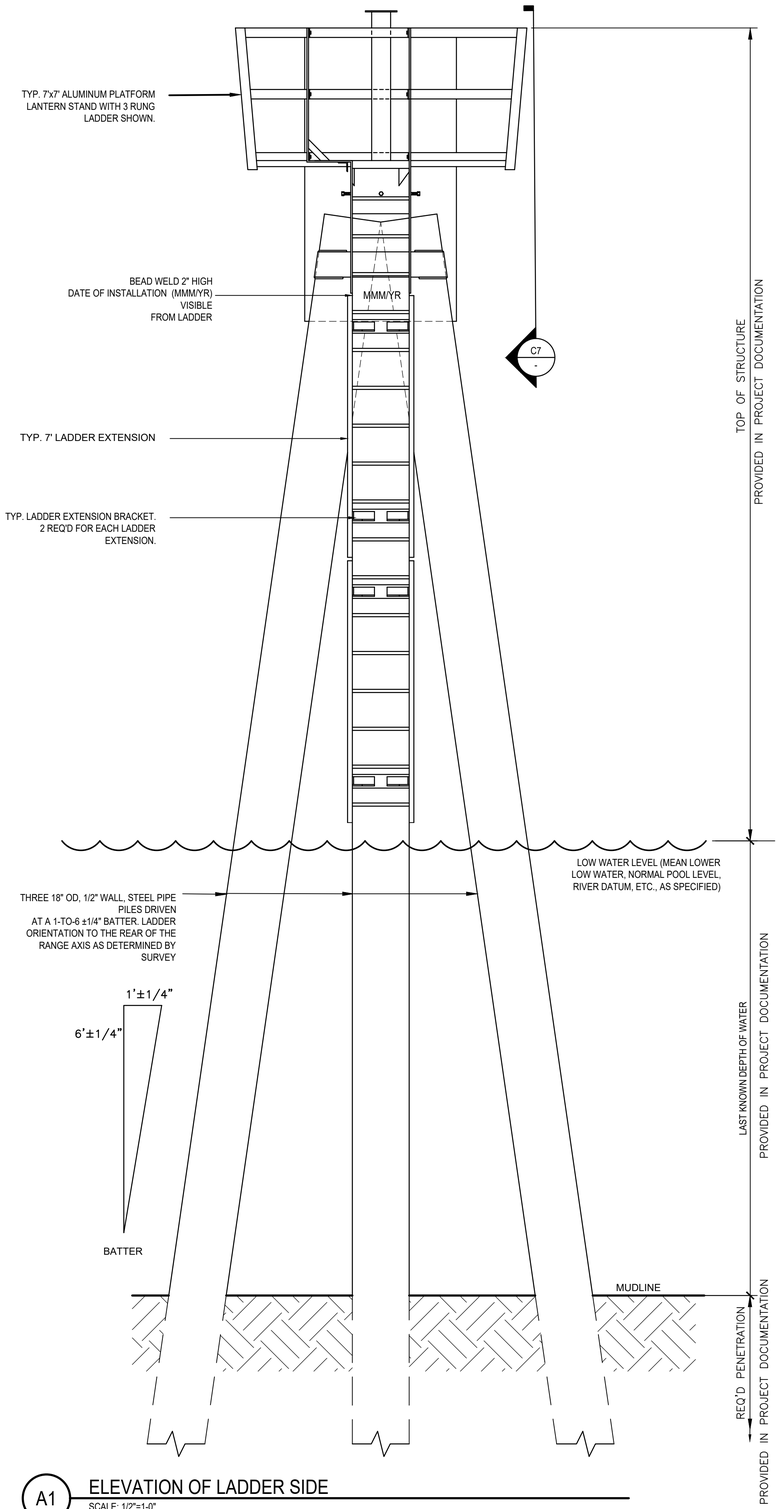

A1 ELEVATION OF LADDER SIDE
SCALE: 1/2"=1-0"

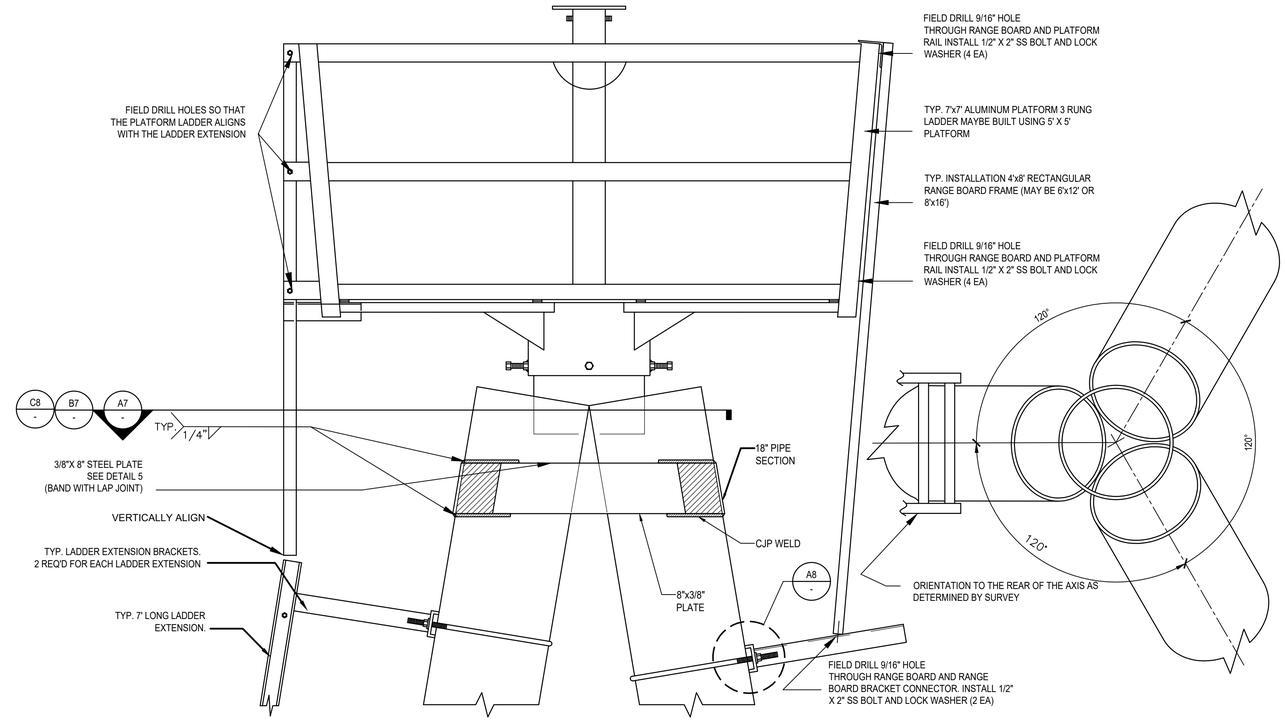

C7 DETAIL: CONNECTION TO DOLPHIN
SCALE: 1"=1-0"

C8 DETAIL: THREE PILE ORIENTATION
SCALE: 1"=1-0"

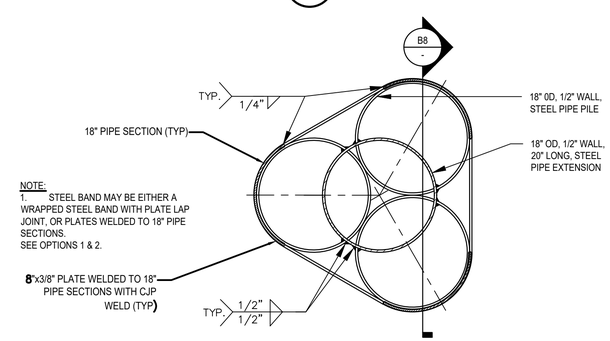

B7 OPTION 1: PLATES WELDED TO CUT 18" PIPE SECTIONS
SCALE: 1"=1-0"

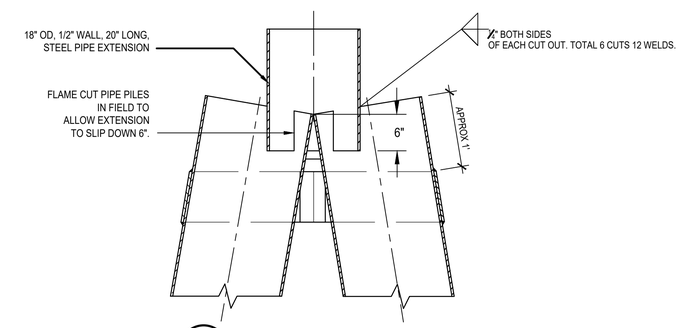

B8 SECTION: TOP OF DOLPHIN
SCALE: 1"=1-0"

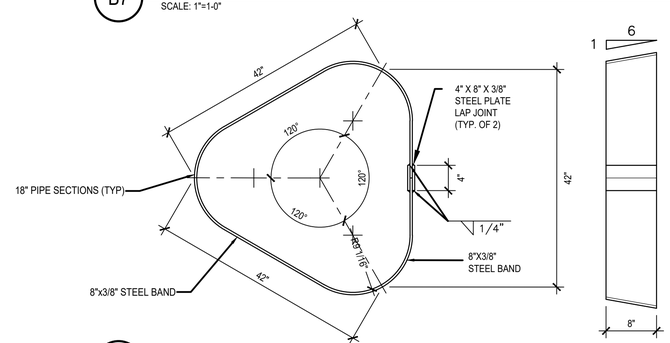

A7 OPTION 2: CONTINUOUS STEEL BAND WITH LAP JOINT
SCALE: 1"=1-0"

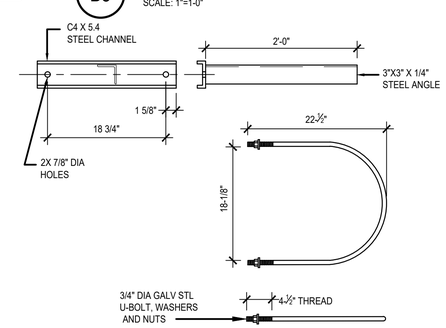

A8 DETAIL: RANGE BOARD BOTTOM FRAME CONNECTOR
SCALE: 1"=1-0"

U.S.C.G.
US COAST GUARD CIVIL ENGINEERING

MARK	DESCRIPTION	DATE
	AS-BUILT	SEP 2018
	FINAL DESIGN	APR 2018
	95% DESIGN	APR 2018
	65% DESIGN	APR 2018
	35% DESIGN	FEB 2018

MEASUREMENT BAR: = 1" (HALF SIZE = 1/2")

A/E COMPANY:
A/E DESIGN COMPANY NAME
AE DESIGN COMPANY CITY, STATE
AE DESIGN COMPANY'S PHONE NUMBER
A/E PROJECT NUMBER
CONSULTING A/E:
CONSULTING COMPANY NAME
CONSULTANT'S CITY, STATE

USCG CIVIL ENGINEERING UNIT, OAKLAND
1301 CLAY STREET SUITE 700N
OAKLAND, CA 94612-5203
USCG PROJECT MANAGER:
LT. G BENJAMIN ACEBO

DESIGNED BY:	DRAWN BY:
DESIGNED BY:	DRAWN BY:
EDITED BY:	CHECKED BY:
EDITED BY:	CHECKED BY:

USCG PROJECT NUMBER
USCG PROJECT NUMBER
USCG DRAWING SERIES NUMBER
P.4 - USCG DRAWING NUMBER
USCG FILENAME
CEUO_ATON-STD-04.dwg
SHEET 00 OF 00

U.S COAST GUARD STD ATONS
CEU OAKLAND
OAKLAND CA
PEDESTAL STRUCTURES & BASES
3 PIPE PILE RANGE STRUCTURE

SHEET ID
ATON-STD-04

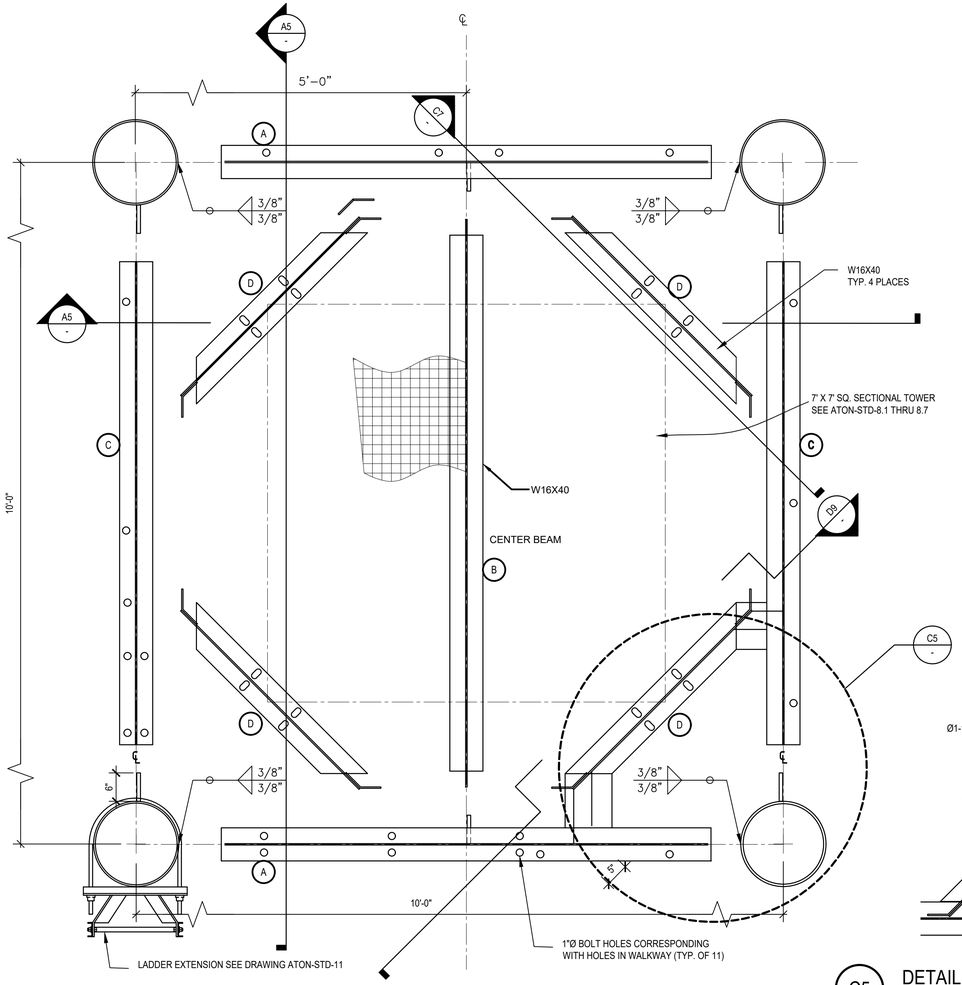

C1 EXPLODED PLAN OF 10'x10' PLATFORM
SCALE: 3/4"=1-0"

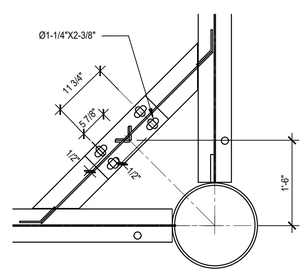

C5 DETAIL: TOWER MOUNTING HOLES
SCALE: 3/4"=1-0"

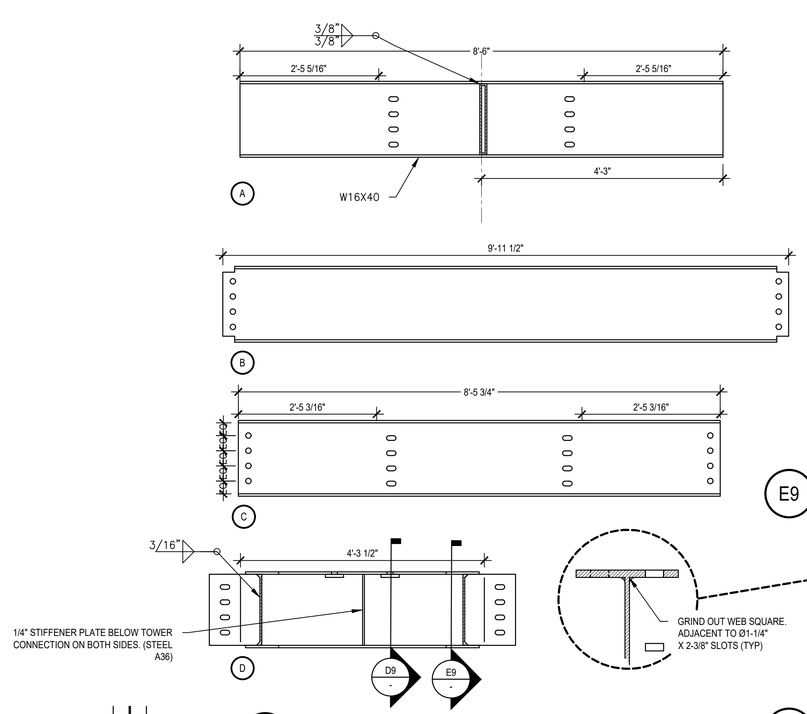

D7 BEAMS A,B,C,D: FABRICATION
SCALE: 3/4"=1-0"

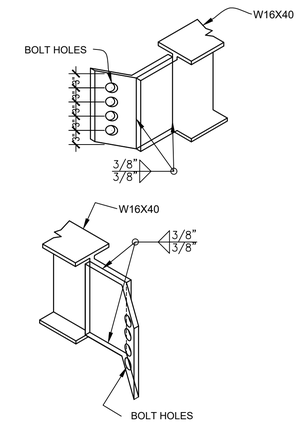

E9 SECTION: BEAM D
SCALE: 3/4"=1-0"

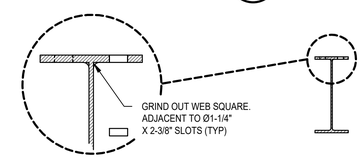

D9 SECTION: BEAM D
SCALE: 3/4"=1-0"

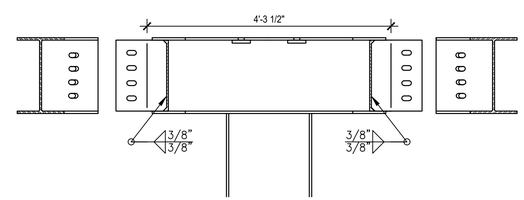

C7 EXPLODED SECTION ELEVATION
SCALE: 3/4"=1-0"

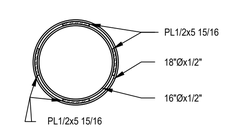

C9 PIPE DETAIL
SCALE: 3/4"=1-0"

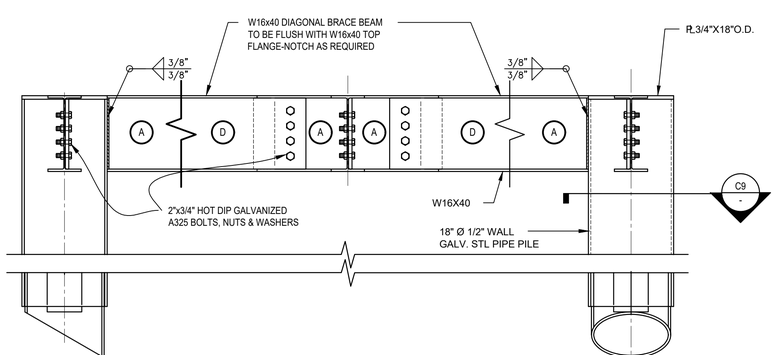

A1 10'x10' PLATFORM - SECTION ELEVATION
SCALE: 3/4"=1-0"

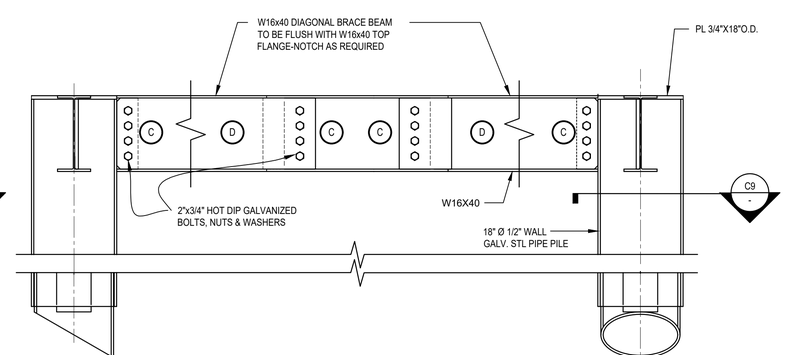

A5 10'x10' PLATFORM - SECTION ELEVATION
SCALE: 3/4"=1-0"

GENERAL NOTES

1. SPECIFIC TYPE OF FIBERGLASS GRATING SHALL BE APPROVED BY THE CONTRACTING OFFICER.
2. GRATING'S STRUCTURAL CAPACITY MUST NOT ALLOW > .37 IN. OF DEFLECTION UNDER A 50 PSF UNIFORM LOAD OVER 60" CLEAR SPAN.
3. CONTRACTOR SHALL USE APPROVED GRATING SS FASTENERS FOR THE CHOSEN GRATING. FASTENERS SHALL BE APPROVED BY THE CONTRACTING OFFICER.
4. PILES SHALL BE DRIVEN TO WITHIN 6" OF POSITION FOR THE PLATFORM TO PROPERLY ALIGN.
5. ALL PARTS TO BE HOT DIPPED GALVANIZED.
6. ALL STRUCTURAL BOLTS, NUTS AND WASHERS TO BE HOT DIPPED GALVAIZED.

US COAST GUARD
CIVIL ENGINEERING

MARK	DESCRIPTION	DATE
	AS-BUILT	SEP 2018
	FINAL DESIGN	APR 2018
	95% DESIGN	APR 2018
	65% DESIGN	APR 2018
	35% DESIGN	FEB 2018

MEASUREMENT BAR: = 1" (HALF SIZE = 1/2")

A/E COMPANY:
A/E DESIGN COMPANY NAME
AE DESIGN COMPANY CITY, STATE
AE DESIGN COMPANY'S PHONE NUMBER
A/E PROJECT NUMBER
CONSULTING A/E:
CONSULTING COMPANY NAME
CONSULTANT'S CITY, STATE

USCG CIVIL ENGINEERING UNIT, OAKLAND
1301 CLAY STREET SUITE 700N
OAKLAND, CA 94612-5203
USCG PROJECT MANAGER:
LT.IG BENJAMIN ACEBO
DESIGNED BY: DRAWN BY:
DESIGNED BY: DRAWN BY
EDITED BY: CHECKED BY:
EDITED BY CHECKED BY

USCG PROJECT NUMBER
USCG DRAWING SERIES NUMBER
P - USCG DRAWING NUMBER
USCG FILENAME
CEUO_ATON-STD-06.12.dwg
SHEET OF

U.S COAST GUARD STD ATONS
CEU OAKLAND
OAKLAND CA
PEDESTAL STRUCTURES & BASES
DETAILS

SHEET ID
ATON-STD-06.1

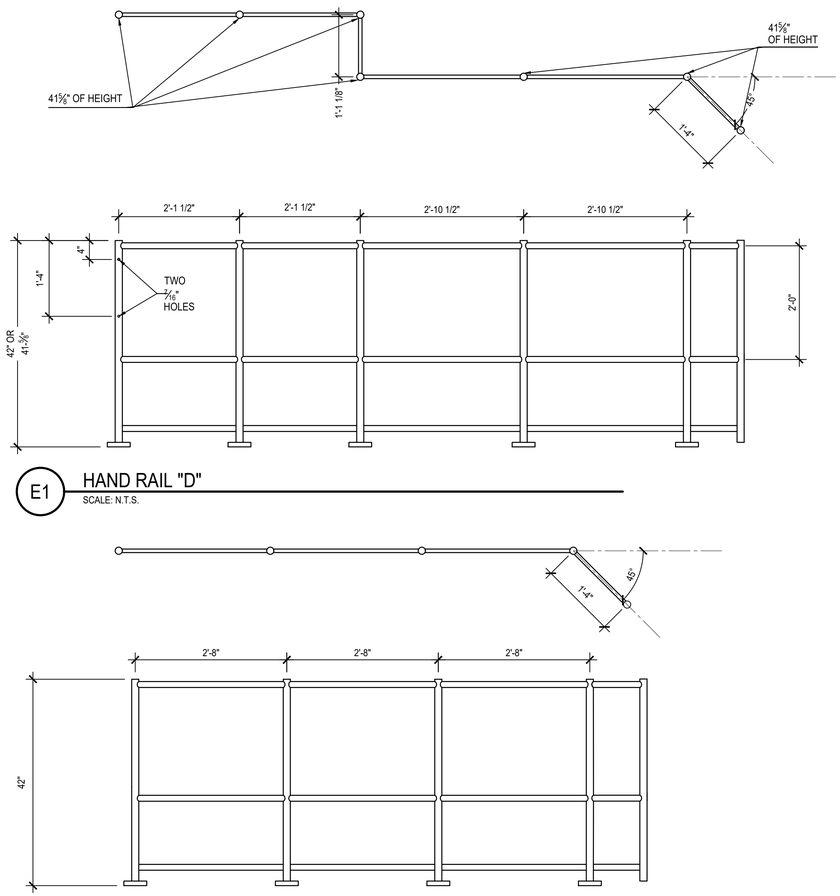

E1 HAND RAIL "D"
SCALE: N.T.S.

C1 HAND RAIL "B & C"
SCALE: N.T.S.

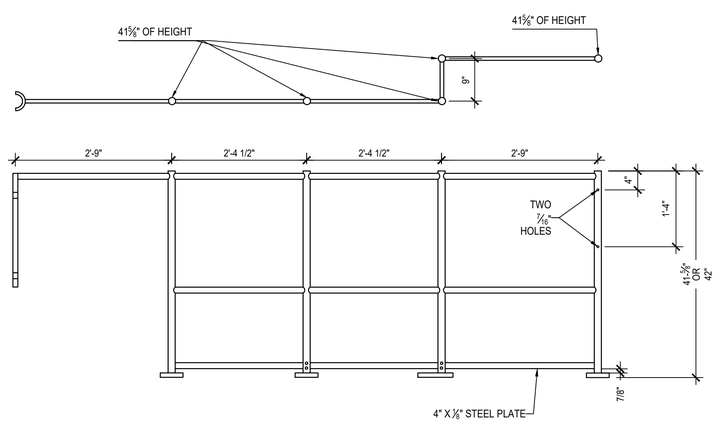

A1 HAND RAIL "A"
SCALE: N.T.S.

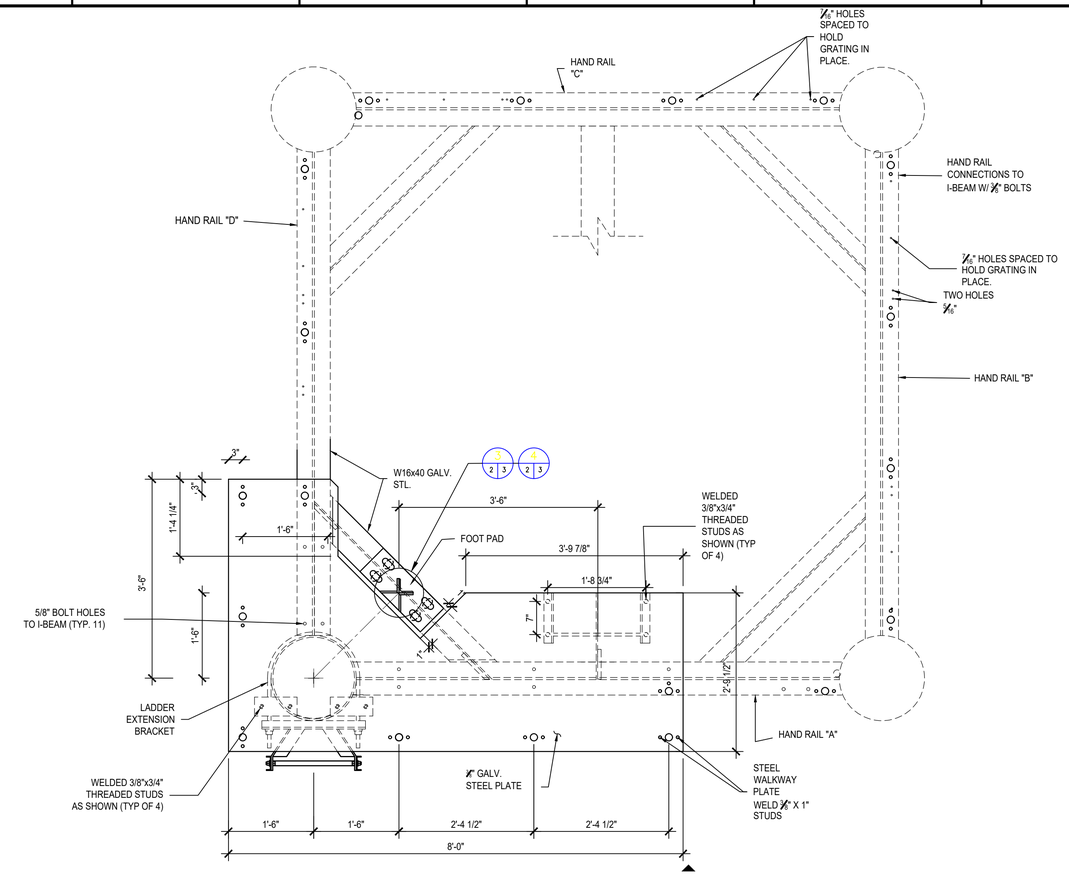

C6 PLAN OF 10'x10' WALKWAY
SCALE: 3/4"=1'-0"
0 1' 2'

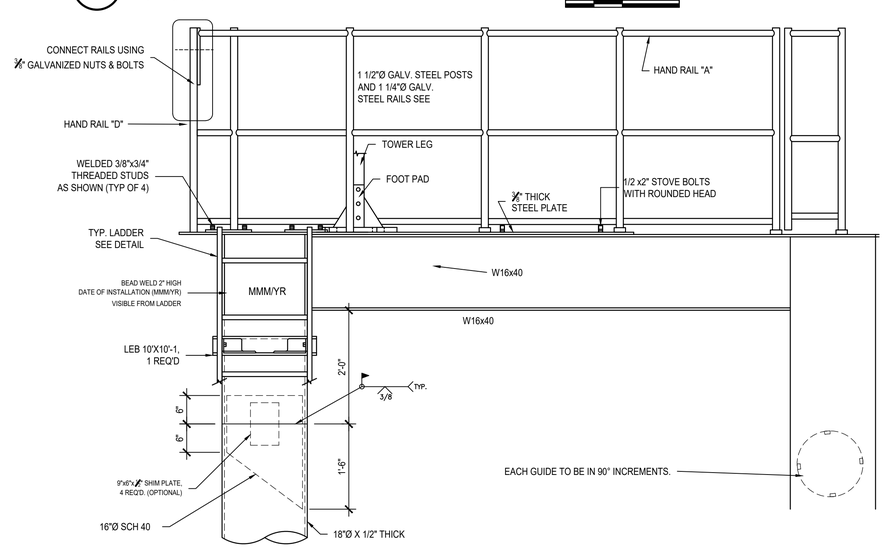

A6 DETAIL:
PLATFORM TO PILE CONNECTION
SCALE: 3/4"=1'-0"
0 1' 2'

US COAST GUARD
CIVIL ENGINEERING

MARK	DESCRIPTION	DATE
	AS-BUILT	SEP 2018
	FINAL DESIGN	APR 2018
	95% DESIGN	APR 2018
	65% DESIGN	APR 2018
	35% DESIGN	FEB 2018

MEASUREMENT BAR: = 1" (HALF SIZE = 1/2")

A/E COMPANY:
A/E DESIGN COMPANY NAME
AE DESIGN COMPANY CITY, STATE
AE DESIGN COMPANY'S PHONE NUMBER
A/E PROJECT NUMBER
CONSULTING A/E:
CONSULTING COMPANY NAME
CONSULTANT'S CITY, STATE

USCG CIVIL ENGINEERING UNIT, OAKLAND
1301 CLAY STREET SUITE 700N
OAKLAND, CA 94612-5203

USCG PROJECT MANAGER:
LT. G BENJAMIN ACEBO

USCG PROJECT NUMBER

USCG DRAWING SERIES NUMBER
P + USCG DRAWING NUMBER

USCG FILENAME
CEUO_ATON-STD-06.2.dwg

DESIGNED BY:	DRAWN BY:
DESIGNED BY:	DRAWN BY:
EDITED BY:	CHECKED BY:
EDITED BY:	CHECKED BY:

SHEET OF

U.S COAST GUARD STD ATONS
CEU OAKLAND
OAKLAND CA

4 PIPE PILE 10'x10' PLATFORM
HANDRAIL

SHEET ID
ATON-STD-06.2

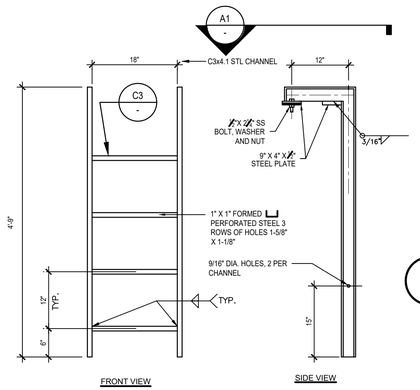

DETAIL: LADDER (1) REQ'D

E1 SCALE: 1"=1'-0"

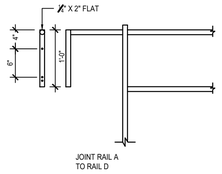

DETAIL: RAIL CONNECTIONS

F3 SCALE: N.T.S.

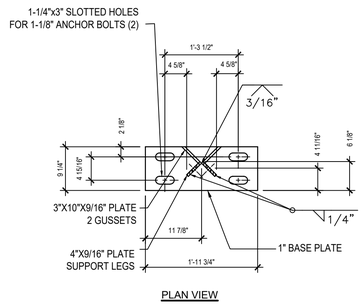

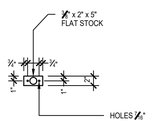

TYP- ALL RAIL TO PLATFORM CONNECTIONS

DETAIL 'A'

C1 SCALE: N.T.S.

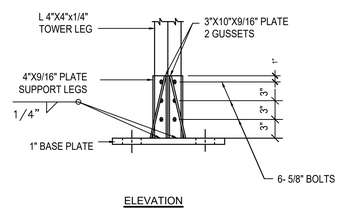

DETAIL: TOWER BASE COLUMN CONNECTION

C4 SCALE: N.T.S.

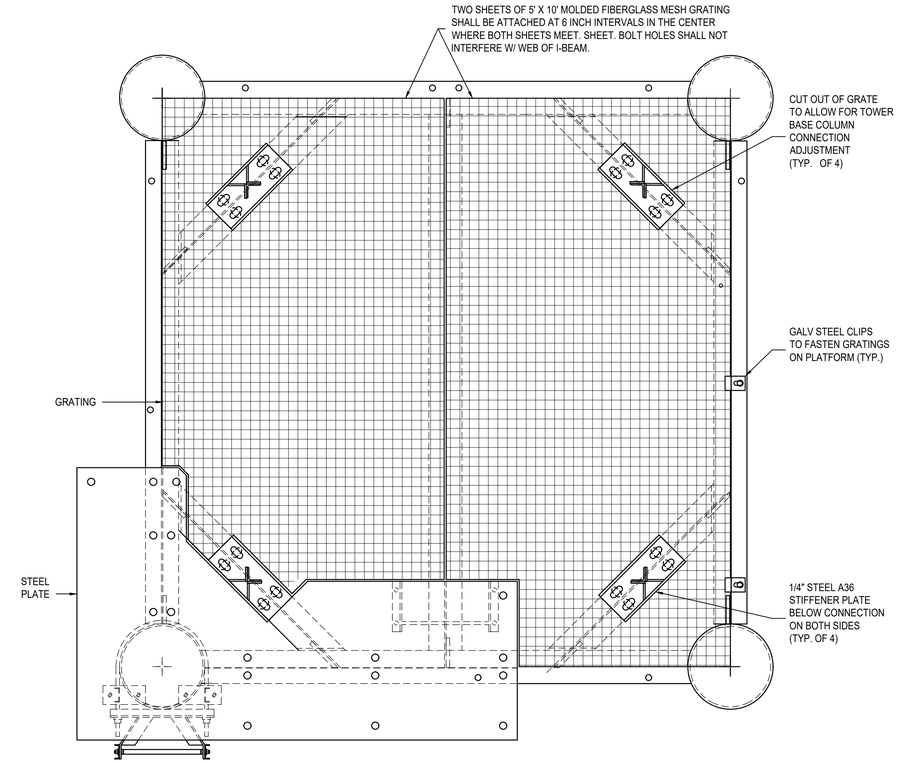

PLATFORM SURFACE COVER

C8 SCALE: 3/4"=1'-0"

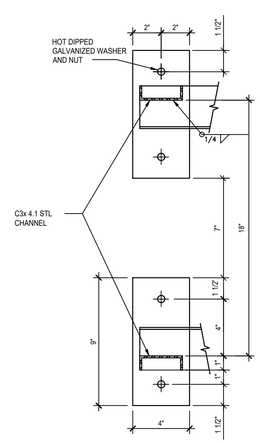

DETAIL: STEEL PLATE RANGE STRUCTURE(2) REQ'D

A1 SCALE: 3"=1'-0"

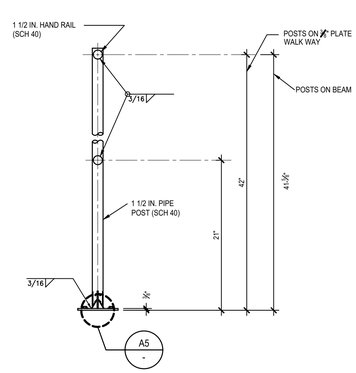

DETAIL: HAND RAIL

A3 SCALE: 1-1/2"=1'-0"

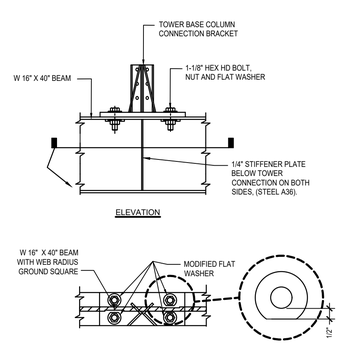

DETAIL: MOUNTING TOWER BASE COLUMN CONNECTION

A5 SCALE: N.T.S.

DETAIL: PHOTO OF RUNGS

A7 SCALE: N.T.S.

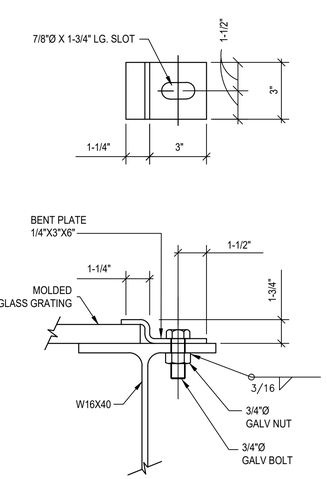

DETAIL: GRATING

A9 SCALE: 3"=1'-0"

US COAST GUARD CIVIL ENGINEERING

MARK	DESCRIPTION	DATE
	AS-BUILT	SEP 2018
	FINAL DESIGN	APR 2018
	95% DESIGN	APR 2018
	65% DESIGN	APR 2018
	35% DESIGN	FEB 2018

MEASUREMENT BAR: = 1" (HALF SIZE = 1/2")

A/E COMPANY: A/E DESIGN COMPANY NAME
A/E DESIGN COMPANY CITY, STATE
A/E DESIGN COMPANY'S PHONE NUMBER
A/E PROJECT NUMBER
CONSULTING A/E:
CONSULTING COMPANY NAME
CONSULTANT'S CITY, STATE

USCG CIVIL ENGINEERING UNIT, OAKLAND
1301 CLAY STREET SUITE 700N
OAKLAND, CA 94612-5203

USCG PROJECT MANAGER: LT J.G. BENJAMIN ACEBO
DESIGNED BY:
DESIGNED BY:
EDITED BY:
EDITED BY:
DRAWN BY:
DRAWN BY:
CHECKED BY:
CHECKED BY:

USCG PROJECT NUMBER
USCG DRAWING SERIES NUMBER P# - USCG DRAWING NUMBER
USCG FILENAME CEUO_ATON-STD-06.3.dwg
SHEET OF

U.S COAST GUARD STD ATONS
CEU OAKLAND
OAKLAND CA

4 PIPE PILE 10'x10' PLATFORM
DETAILS

SHEET ID
ATON-STD-06.3

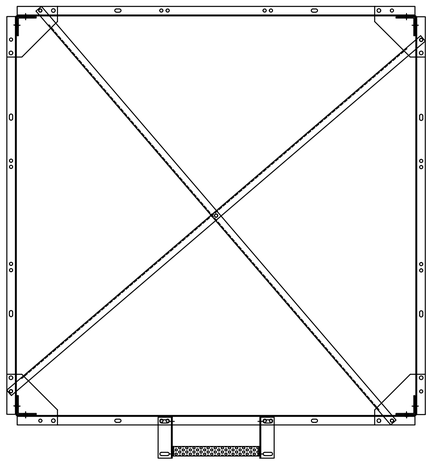

E1 TOWER LOOKING DOWN FROM TOP
SCALE: N.T.S.

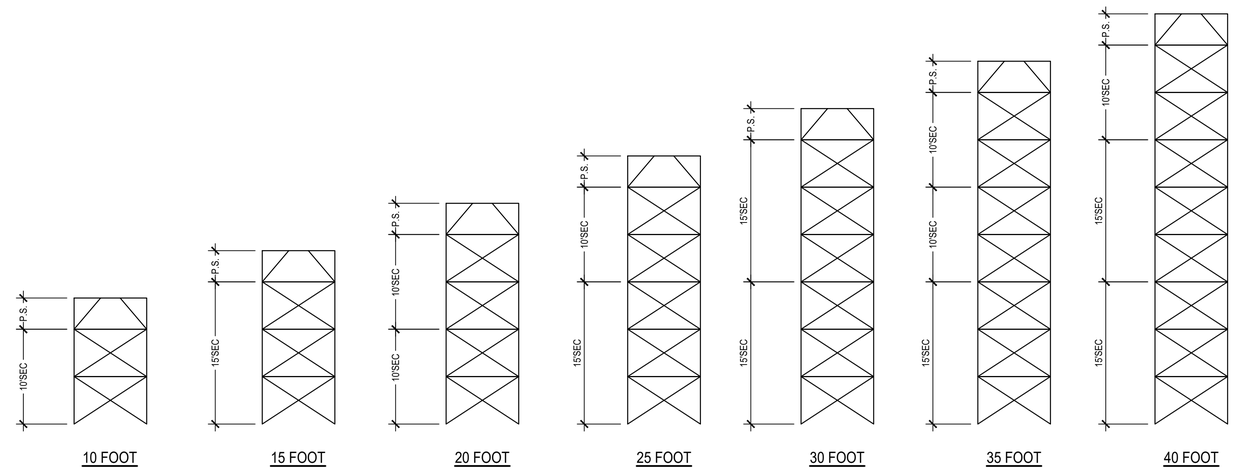

E5 SCHEMATIC ASSEMBLY DIAGRAM
SCALE: N.T.S.

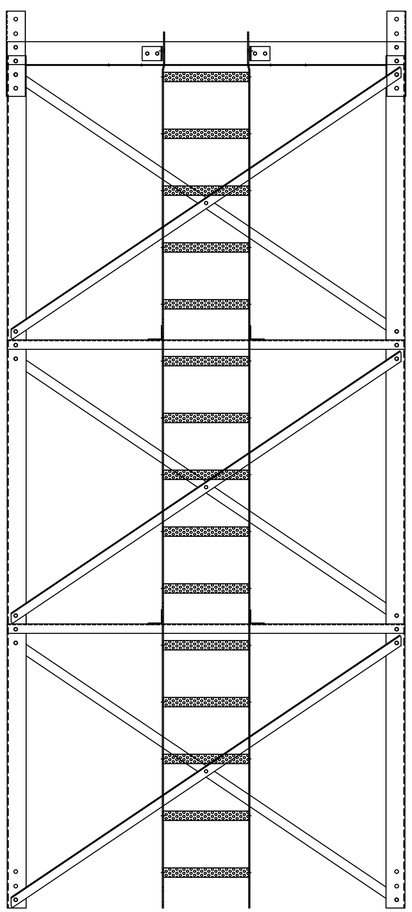

A1 ELEVATION OF TOWER - LADDER SIDE
SCALE: N.T.S.

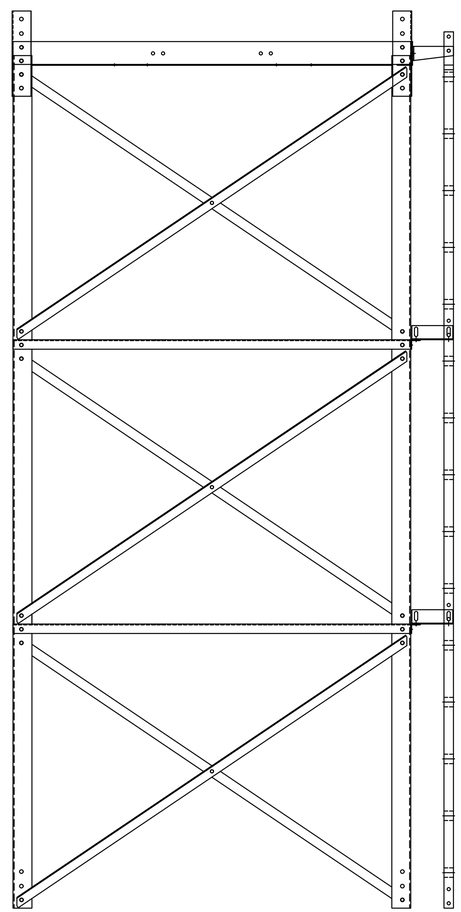

A4 ELEVATION OF TOWER - SIDE
SCALE: N.T.S.

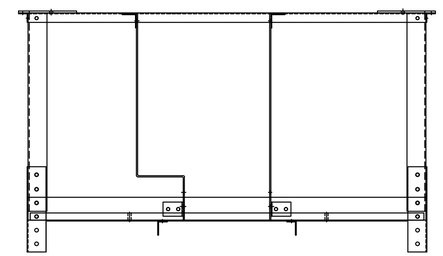

D7 ELEVATION PLATFORM LADDER SIDE VIEW
SCALE: N.T.S.

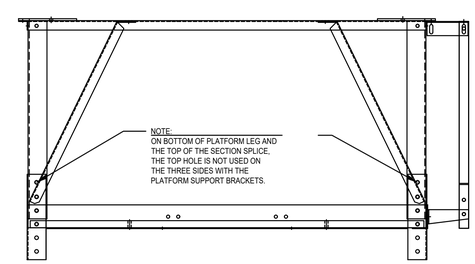

A7 ELEVATION PLATFORM SIDE VIEW
SCALE: N.T.S.

US COAST GUARD
CIVIL ENGINEERING

MARK	DESCRIPTION	DATE
	AS-BUILT	SEP 2018
	FINAL DESIGN	APR 2018
	95% DESIGN	APR 2018
	65% DESIGN	APR 2018
	35% DESIGN	FEB 2018

MEASUREMENT BAR: = 1" (HALF SIZE = 1/2")

A/E COMPANY:
A/E DESIGN COMPANY NAME
AE DESIGN COMPANY CITY, STATE
AE DESIGN COMPANY'S PHONE NUMBER
A/E PROJECT NUMBER
CONSULTING A/E:
CONSULTING COMPANY NAME
CONSULTANT'S CITY, STATE

USCG CIVIL ENGINEERING UNIT, OAKLAND
1301 CLAY STREET SUITE 700N
OAKLAND, CA 94612-5203
USCG PROJECT MANAGER:
LT LG BENJAMIN ACEBO

DESIGNED BY:	DRAWN BY:
DESIGNED BY:	DRAWN BY:
EDITED BY:	CHECKED BY:
EDITED BY	CHECKED BY

USCG PROJECT NUMBER
USCG PROJECT NUMBER
USCG DRAWING SERIES NUMBER
P-1 USCG DRAWING NUMBER
USCG FILENAME
USCG DWG NUM + SHT IT.dwg
SHEET 00 OF 00

U.S COAST GUARD STD ATONS
CEU OAKLAND
OAKLAND CA
7'x7' TOWER STRUCTURAL
ELEVATION & PLATFORM

SHEET ID
ATON-STD-08.1

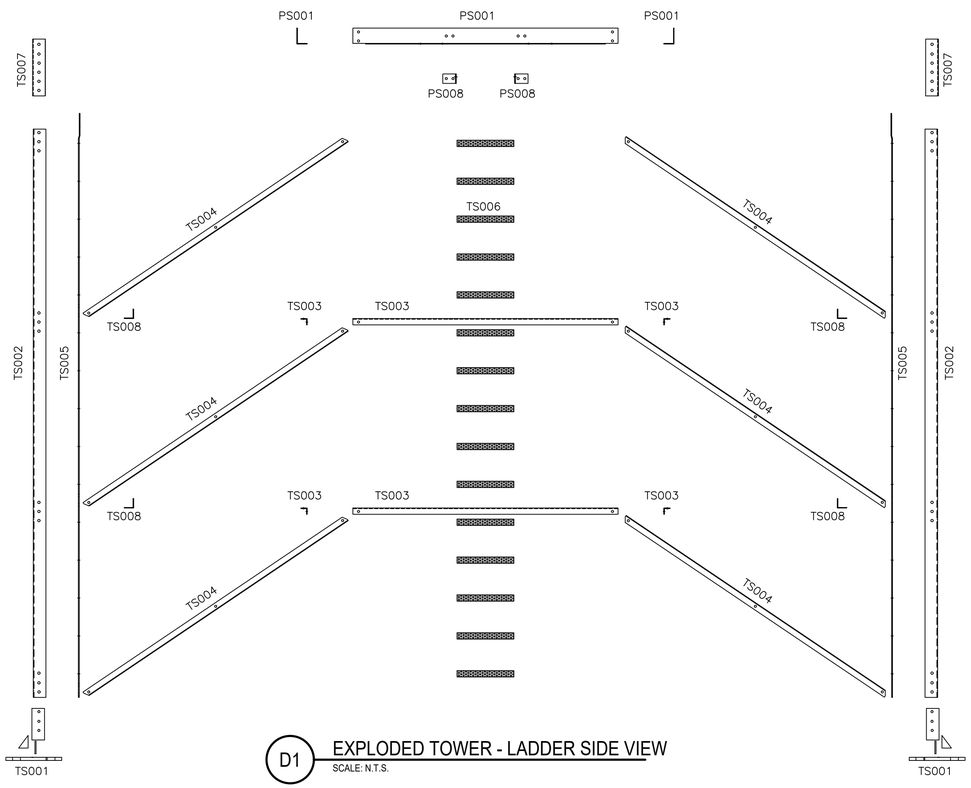

D1 EXPLODED TOWER - LADDER SIDE VIEW
SCALE: N.T.S.

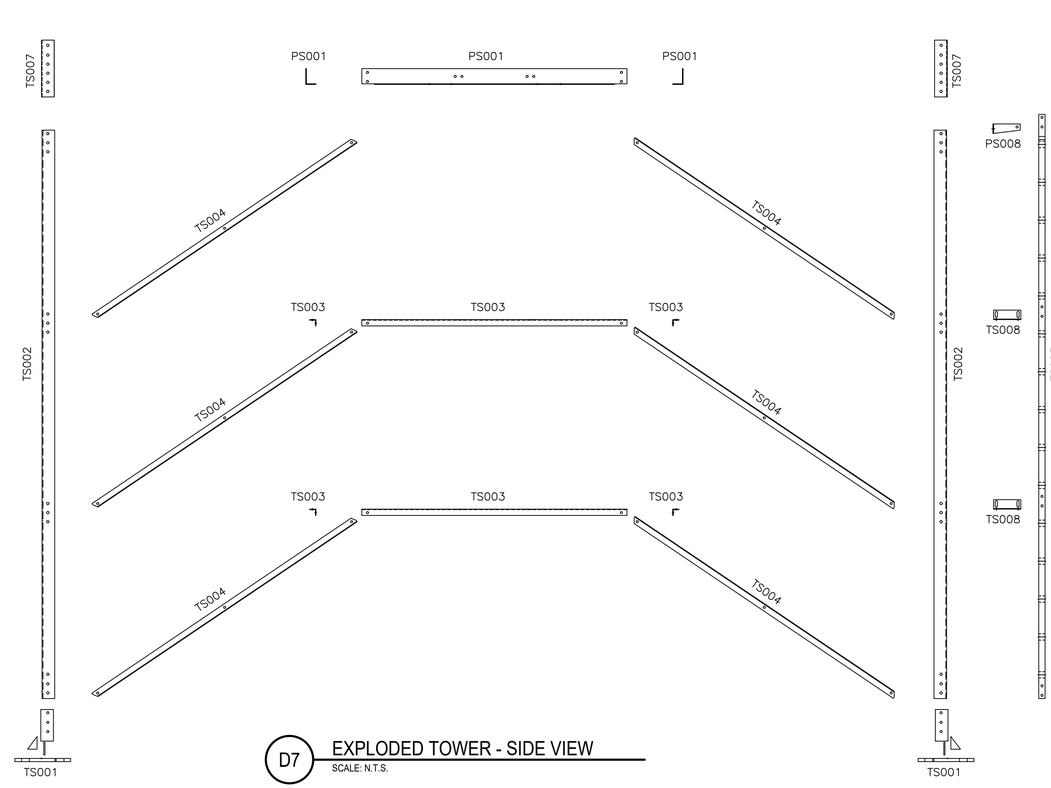

D7 EXPLODED TOWER - SIDE VIEW
SCALE: N.T.S.

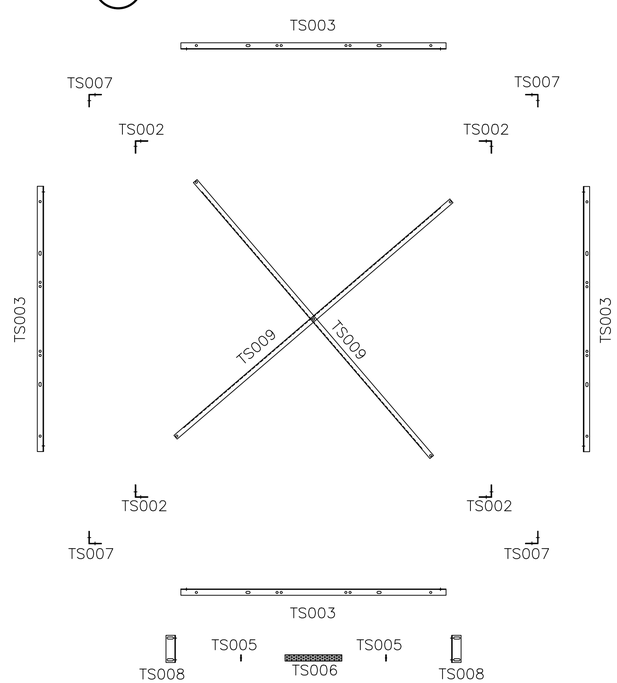

A1 EXPLODED TOWER - TOP VIEW
SCALE: N.T.S.

PARTS

PART NUMBER	DETAIL NUMBER	REFERENCE DRAWING	NUMBER OF PARTS		DESCRIPTIONS
			10'	15'	
TS001	B1	8.6	4	4	TOWER BASE COLUMN CONNECTION
TS002A	F5	8.4	4	0	TEN FOOT TOWER LEG 4"X4"X¼"
TS002B	C5	8.4	0	4	FIFTEEN FOOT TOWER LEG 4"X4"X¼"
TS003	C6	8.6	4	8	HORIZONTAL BAR 2"X2"X3/16"
TS004	F6	8.6	16	24	CROSS BAR 2"X2"X3/16"
TS005A	E5	8.4	2	0	TEN FOOT LADDER LEG 2"X¼"
TS005B	A5	8.4	0	2	FIFTEEN FOOT LADDER LEG 2"X¼"
TS006	F1	8.6	10	15	LADDER RUNG
TS007	A6	8.6	4	4	SECTION SPLICE 4"X4"X1/4"
TS008	E4	8.6	4	6	LADDER CLIP 3"X3"X3/16"
TS009	E6	8.6	2	4	TOWER SECTION SUPPORT 1½"X1½"X3/16"
PS001	C1	8.5	4	4	KICK PLATE 5'X3'X3/16"
PS008 L	E6	8.5	1	1	UPPER LADDER CLIP LEFT
PS008 R	E6	8.5	1	1	UPPER LADDER CLIP RIGHT

U.S.C.G.
US COAST GUARD
CIVIL ENGINEERING

MARK	DESCRIPTION	DATE
	AS-BUILT	SEP 2018
	FINAL DESIGN	APR 2018
	95% DESIGN	APR 2018
	65% DESIGN	APR 2018
	35% DESIGN	FEB 2018

MEASUREMENT BAR: = 1" (HALF SIZE = 1/2")

A/E COMPANY:
A/E DESIGN COMPANY NAME
AE DESIGN COMPANY CITY, STATE
AE DESIGN COMPANY'S PHONE NUMBER
A/E PROJECT NUMBER
CONSULTING A/E:
CONSULTING COMPANY NAME
CONSULTANT'S CITY, STATE

USCG CIVIL ENGINEERING UNIT, OAKLAND
1301 CLAY STREET SUITE 700N
OAKLAND , CA 94612-5203
USCG PROJECT MANAGER:
LT.G BENJAMIN ACEBO

DESIGNED BY: DRAWN BY:
DESIGNED BY: DRAWN BY:
EDITED BY: CHECKED BY:
EDITED BY: CHECKED BY

USCG PROJECT NUMBER
USCG PROJECT NUMBER
USCG DRAWING SERIES NUMBER
P + USCG DRAWING NUMBER
USCG FILENAME
USCG DWG NUM + SHT IT.dwg
SHEET 00 OF 00

U.S COAST GUARD STD ATONS
CEU OAKLAND
OAKLAND CA

7'x7' TOWER STRUCTURAL
EXPLODE TOWER PARTS

SHEET ID
ATON-STD-08.2

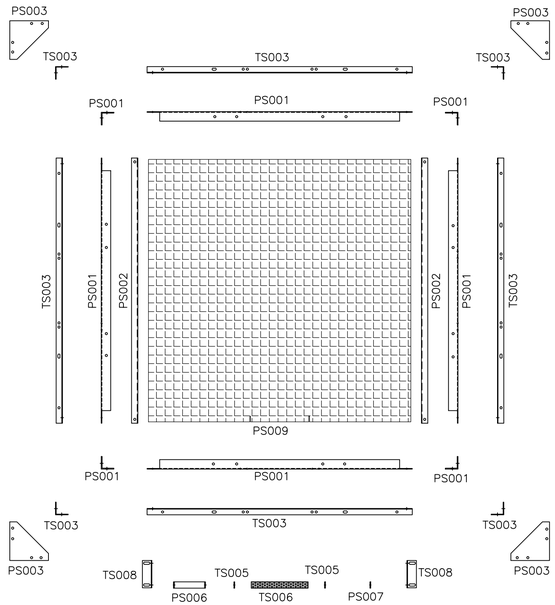

NOTE: ADDITIONAL BOLTS TO BE ADDED TO PLATFORM ON PS003 AND TS003 AS SHOWN, ONLY ON TOP RAIL OF PLATFORM

D1 EXPLODED PLATFORM - TOP VIEW
SCALE: N.T.S.

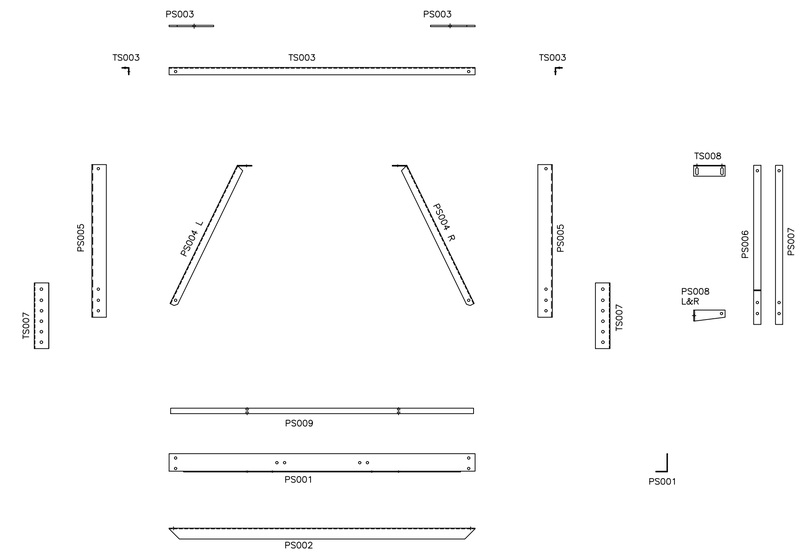

D7 EXPLODED TOWER - SIDE VIEW
SCALE: N.T.S.

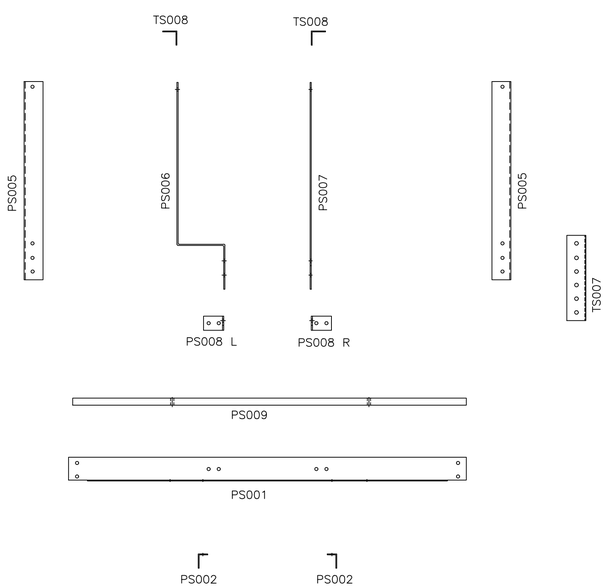

A1 EXPLODED PLATFORM - LADDER SIDE VIEW
SCALE: N.T.S.

PARTS

PART NUMBER	DETAIL NUMBER	REFERENCE DRAWING	NUMBER OF		DESCRIPTION
			10'	15'	
PS001	C1	8.5	4	4	KICK PLATE 5'X3'X3/16"
PS002	A1	8.5	2	2	TOP PLATFORM SUPPORT 3"X2"X3/16"
PS003	E1	8.5	4	4	PLATFORM GUSSET 3/8"
PS004 L	C6	8.5	3	3	PLATFORM SUPPORT BRACKETS 2"X"2X3/16"
PS004 R	C6	8.5	3	3	PLATFORM SUPPORT BRACKETS 2"X"2X3/16"
PS005	D6	8.5	4	4	PLATFORM LEG 4"X4"X1/4"
PS006	A6	8.5	1	1	PLATFORM LADDER RAIL LEFT 2"X1/4"
PS007	A6	8.5	1	1	PLATFORM LADDER RAIL RIGHT 2"X1/4"
PS008 L	E6	8.5	1	1	TOP LADDER CLIPS LEFT
PS008 R	E6	8.5	1	1	TOP LADDER CLIPS RIGHT
PS009	A9	8.5	2	2	PLATFORM FIBER GLASS GRATE 4'X8' SECTION
TS003	C6	8.6	4	4	HORIZONTAL BAR 2"x2"X3/16"
TS008	E4	8,6	2	2	LADDER CLIP 3"X3"X3/16"

US COAST GUARD
CIVIL ENGINEERING

MARK	DESCRIPTION	DATE
	AS-BUILT	SEP 2018
	FINAL DESIGN	APR 2018
	95% DESIGN	APR 2018
	65% DESIGN	APR 2018
	35% DESIGN	FEB 2018

MEASUREMENT BAR: = 1" (HALF SIZE = 1/2")

A/E COMPANY:
A/E DESIGN COMPANY NAME
AE DESIGN COMPANY CITY, STATE
AE DESIGN COMPANY'S PHONE NUMBER
A/E PROJECT NUMBER
CONSULTING A/E:
CONSULTING COMPANY NAME
CONSULTANT'S CITY, STATE

USCG CIVIL ENGINEERING UNIT OAKLAND
1301 CLAY STREET SUITE 700N
OAKLAND, CA 94612-5203
USCG PROJECT MANAGER:
LT I.G. BENJAMIN ACEBO
DESIGNED BY: DRAWN BY:
DESIGNED BY: DRAWN BY
EDITED BY: CHECKED BY:
EDITED BY: CHECKED BY

USCG PROJECT NUMBER
USCG PROJECT NUMBER
USCG DRAWING SERIES NUMBER
P7 - USCG DRAWING NUMBER
USCG FILENAME
USCG DWG NUM + SHT IT.dwg
SHEET 00 OF 00

U.S COAST GUARD STD ATONS
CEU OAKLAND
OAKLAND CA

7x7' TOWER STRUCTURAL
EXPLODE TOWER PARTS

SHEET ID
ATON-STD-08.3

GENERAL NOTES

1. ALL HOLE DRILLED 11/16"Ø WITH NOT LESS THEN 3/32" OPEN Ø AFTER HOT DIP GALVANIZED.
2. NUT AND LOCK WASHERS SHALL BE PROVIDED WITH ALL BOLTS. NUTS TO BE 5/8" HEX GALVANIZED.
3. ALL FASTENERS TO BE HOT DIPPED GALVANIZED.
4. ALL BOLTS WILL BE 5/8"x2"-NC GALVANIZED A325 HEX HEAD.
5. BOLT TO BE INSTALLED WITH HEAD UP OR HEAD OUTSIDE, LOCK WASHER ON NUT SIDE.

TEN FOOT LEGS

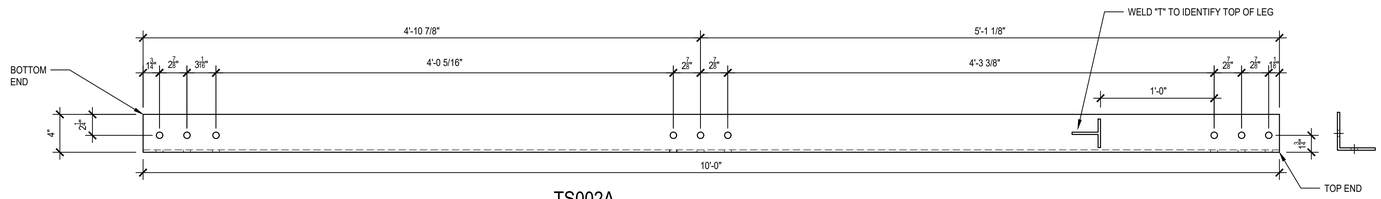

F5 TS002A
LADDER RAIL 4"x4"x 1/4"
SCALE: 1-1/2"=1'-0"

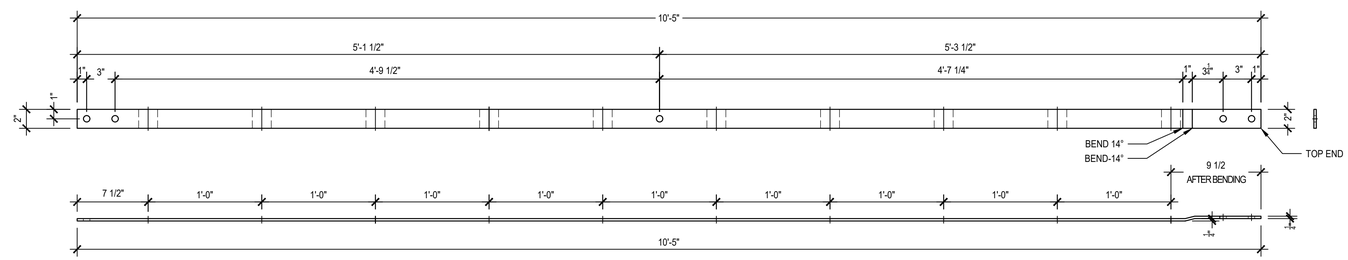

E5 TS005A
LADDER RAIL 2"x 1/4"
SCALE: 1-1/2"=1'-0"

FIFTEEN FOOT LEGS

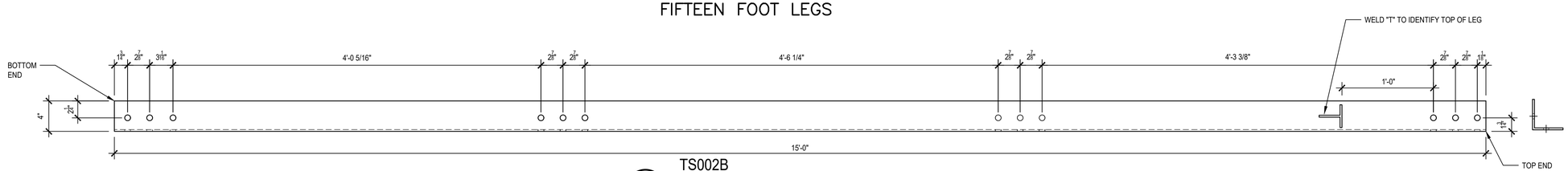

C5 TS002B
TOWER LEG 4"x4"x 1/4"
SCALE: 1-1/2"=1'-0"

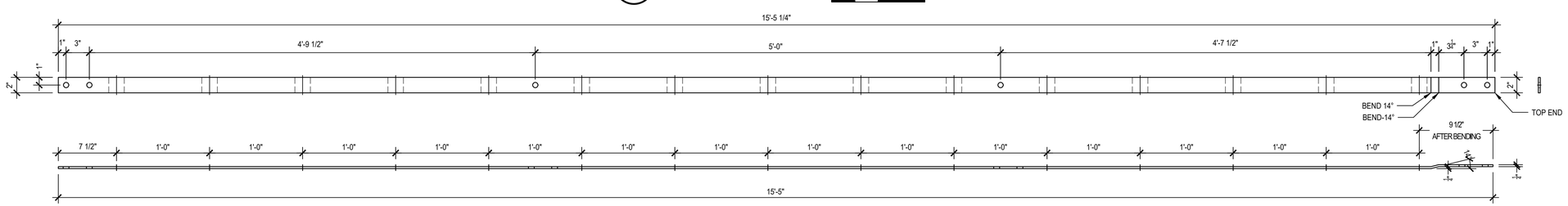

A5 TS005B
LADDER RAIL 2"X1/4"
SCALE: 1-1/2"=1'-0"

US COAST GUARD
CIVIL ENGINEERING

MARK	DESCRIPTION	DATE
	AS-BUILT	SEP 2018
	FINAL DESIGN	APR 2018
	95% DESIGN	APR 2018
	65% DESIGN	APR 2018
	35% DESIGN	FEB 2018

MEASUREMENT BAR: = 1" (HALF SIZE = 1/2")

A/E COMPANY:
A/E DESIGN COMPANY NAME
AE DESIGN COMPANY CITY, STATE
AE DESIGN COMPANY'S PHONE NUMBER
A/E PROJECT NUMBER
CONSULTING A/E:
CONSULTING COMPANY NAME
CONSULTANT'S CITY, STATE

USCG CIVIL ENGINEERING UNIT, OAKLAND
1301 CLAY STREET SUITE 700N
OAKLAND, CA 94612-5203

USCG PROJECT MANAGER:
LT IG BENJAMIN ACEBO

DRAWN BY:
DRAWN BY
DESIGNED BY:
DESIGNED BY
CHECKED BY:
CHECKED BY
EDITED BY:
EDITED BY

USCG PROJECT NUMBER
USCG PROJECT NUMBER
USCG DRAWING SERIES NUMBER
P# - USCG DRAWING NUMBER
USCG FILENAME
USCG DWG NUM + SHT IT.dwg
SHEET 00 OF 00

U.S COAST GUARD STD ATONS
CEU OAKLAND
OAKLAND CA

7x7' TOWER STRUCTURAL
TOWER AND LADDER LEGS

SHEET ID
ATON-STD-08.4

GENERAL NOTES

1. ALL HOLE DRILLED 11/16"Ø WITH NOT LESS THEN 7/32" OPEN Ø AFTER HOT DIP GALVANIZED.
2. NUT AND LOCK WASHERS SHALL BE PROVIDED WITH ALL BOLTS. NUTS TO BE 5/8" HEX GALVANIZED.
3. ALL FASTENERS TO BE HOT DIPPED GALVANIZED.
4. ALL BOLTS WILL BE 5/8"x2"-NC GALVANIZED A325 HEX HEAD.
5. BOLT TO BE INSTALLED WITH HEAD UP OR HEAD OUTSIDE, LOCK WASHER ON NUT SIDE.

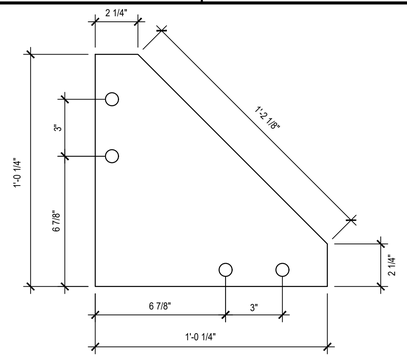

E1 PS003
PLATFORM GUSSET 3/8"
SCALE: 1-1/2"=1'-0"

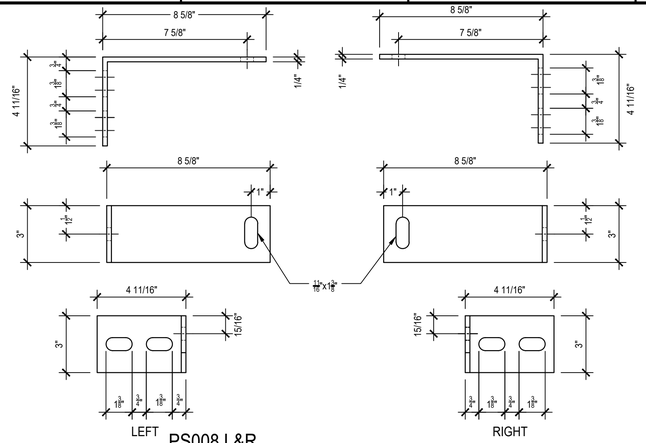

E6 PS008 L&R
TOP LADDER CLIPS
SCALE: 1-1/2"=1'-0"

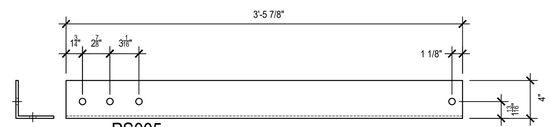

D6 PS005
PLATFORM LEGS
SCALE: 1-1/2"=1'-0"

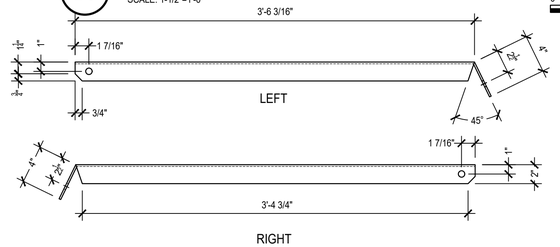

C6 PS004 L&R
PLATFORM SUPPORT BRACKETS 2"X2"X3/16"
SCALE: 1-1/2"=1'-0"

C1 PS001
PLATFORM KICK PLATE 5"x3"x3/16"
SCALE: 1-1/2"=1'-0"

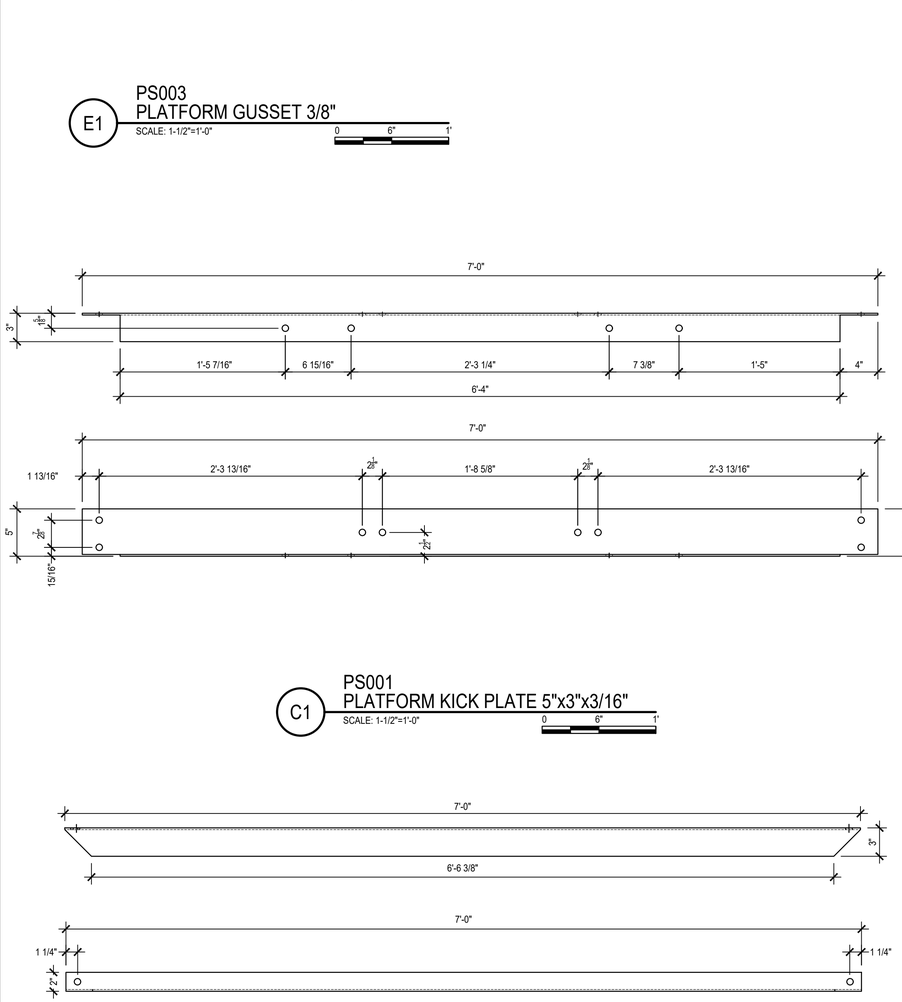

A1 PS002
TOP SUPPORT FOR PLATFORM 3"x2"x3/16"
SCALE: 1-1/2"=1'-0"

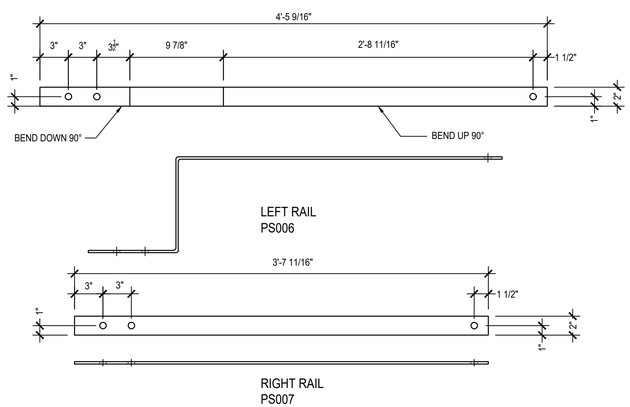

A6 PS006, PS007
PLATFORM LADDER RAILS 2"x1/4"
SCALE: 1-1/2"=1'-0"

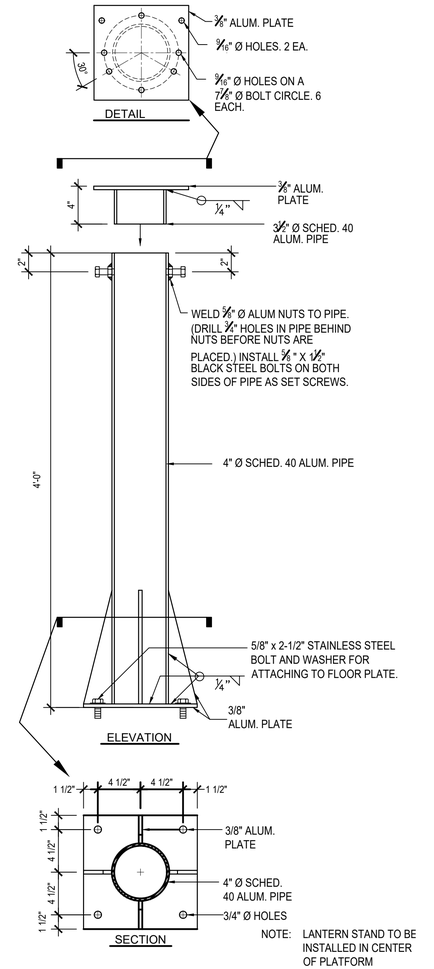

NOTE: LANTERN STAND TO BE INSTALLED IN CENTER OF PLATFORM

C9 LANTERN STAND
SCALE: 1-1/2"=1'-0"

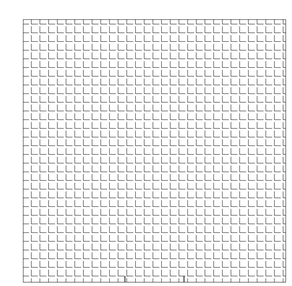

A9 PS002
PLATFORM FIBER GLASS GRATE
SCALE: 1/2"=1'-0"

U.S.C.G.
US COAST GUARD
CIVIL ENGINEERING

MARK	DESCRIPTION	DATE
	AS-BUILT	SEP 2018
	FINAL DESIGN	APR 2018
	95% DESIGN	APR 2018
	65% DESIGN	APR 2018
	35% DESIGN	FEB 2018

MEASUREMENT BAR: = 1" (HALF SIZE = 1/2")

AE COMPANY:
AE DESIGN COMPANY NAME
AE DESIGN COMPANY CITY, STATE
AE DESIGN COMPANY'S PHONE NUMBER
AE'S PROJECT NUMBER
CONSULTING AE:
CONSULTING COMPANY NAME
CONSULTANT'S CITY, STATE

USCG CIVIL ENGINEERING UNIT, OAKLAND
1301 CLAY STREET SUITE 700N
OAKLAND , CA 94612-5203
USCG PROJECT MANAGER:
USCG DESIGN PROJECT MANAGER
DESIGNED BY:
DRAWN BY:
EDITED BY:
CHECKED BY:

USCG PROJECT NUMBER
USCG PROJECT NUMBER
USCG DRAWING SERIES NUMBER
P + USCG DRAWING NUMBER
USCG FILENAME
USCG DWG NUM + SHT IT.dwg
SHEET 00 OF 00

U.S COAST GUARD STD ATONS
CEU OAKLAND
OAKLAND CA
7'x7' TOWER STRUCTURAL
PLATFORM PARTS

SHEET ID
ATON-STD-08.5

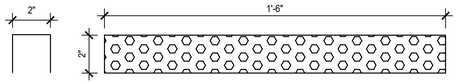

NOTE:
TRACTION TREAD LADDER RUNGS,
PLAIN STEEL COLD ROLLED, 13 GA.
3 ROW (HOLES FOR TRACTION) LADDER RUNG,
1.25 DEEP OF CHANNEL WITH 1.6250 WIDTH

F1 TS006
LADDER RUNG
SCALE: 1-1/2"=1'-0"

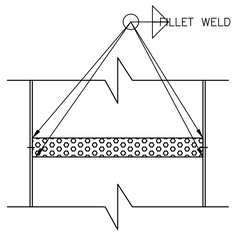

E1 LADDER RUNG WELD DETAIL
SCALE: 1-1/2"=1'-0"

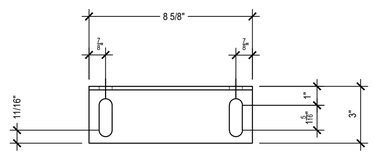

E4 TS008
LADDER CLIP 2"x3"x3/16"
SCALE: 1-1/2"=1'-0"

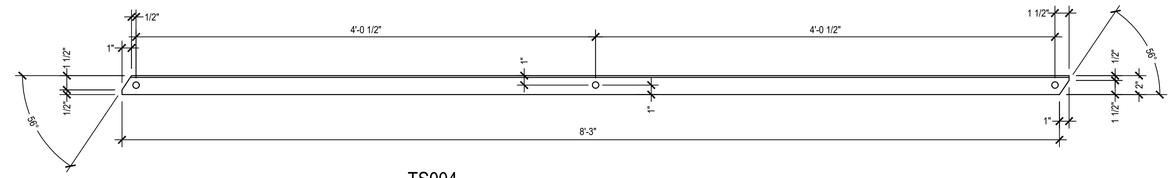

F6 TS004
SECTION CROSS BAR SUPPORT 2"x2"x3/16"
SCALE: 1-1/2"=1'-0"

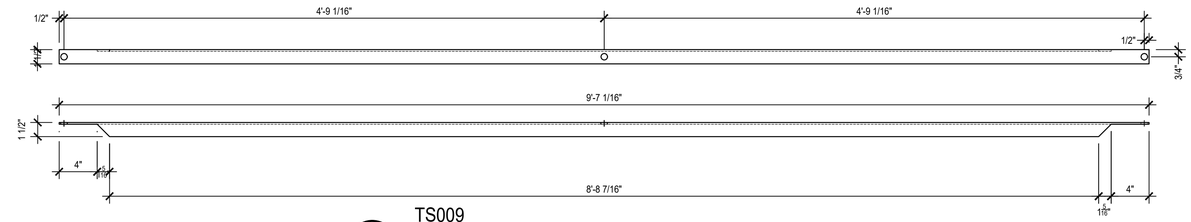

E6 TS009
SECTION SUPPORT 1 1/2"x1 1/2"x3/16"
SCALE: 1-1/2"=1'-0"

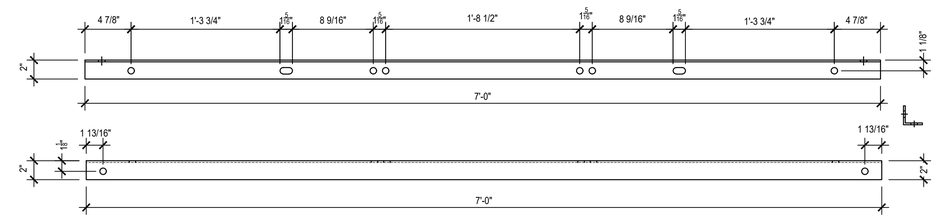

C6 TS003
HORIZONTAL BAR 2"x2"x3/16"
SCALE: 1-1/2"=1'-0"

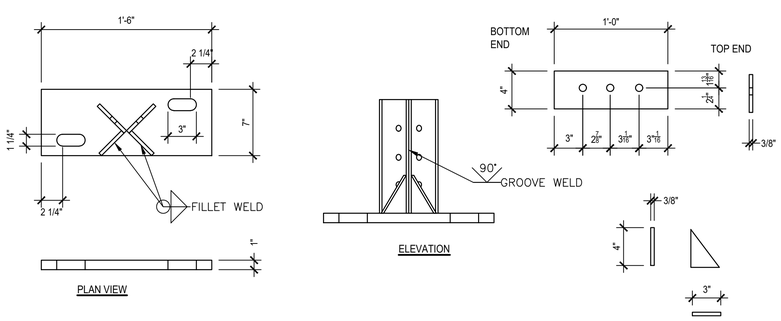

B1 TS001
TOWER BASE COLUMN CONNECTION
SCALE: 1-1/2"=1'-0"

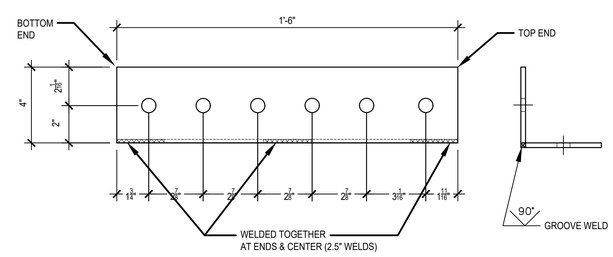

NOTE: THIS IS NOT 4" ANGLE! THIS SECTION SPLICE IS MADE FROM 2 PIECES OF 4"x18"x1/4" FLAT BAR GROOVE WELDED TOGETHER.

A6 TS007
SECTION SPLICE 4"x4"x1/4"
SCALE: 1-1/2"=1'-0"

GENERAL NOTES

1. ALL HOLE DRILLED 11/16"Ø WITH NOT LESS THEN 3/32" OPEN Ø AFTER HOT DIP GALVANIZED.
2. NUT AND LOCK WASHERS SHALL BE PROVIDED WITH ALL BOLTS. NUTS TO BE 5/8" HEX GALVANIZED.
3. ALL FASTENERS TO BE HOT DIPPED GALVANIZED.
4. ALL BOLTS WILL BE 5/8"x2"-NC GALVANIZED A325 HEX HEAD.
5. BOLT TO BE INSTALLED WITH HEAD UP OR HEAD OUTSIDE, LOCK WASHER ON NUT SIDE.
6. THIS BASE COLUMN CONNECTION IS FOR 40' TOWERS AND SMALLER.

US COAST GUARD
CIVIL ENGINEERING

MARK	DESCRIPTION	DATE
AS-BUILT		SEP 2018
FINAL DESIGN		APR 2018
95% DESIGN		APR 2018
65% DESIGN		APR 2018
35% DESIGN		FEB 2018

MEASUREMENT BAR: = 1" (HALF SIZE = 1/2")

A/E COMPANY:
A/E DESIGN COMPANY NAME
AE DESIGN COMPANY CITY, STATE
AE DESIGN COMPANY'S PHONE NUMBER
A/E PROJECT NUMBER
CONSULTING A/E:
CONSULTING COMPANY NAME
CONSULTANT'S CITY, STATE

USCG CIVIL ENGINEERING UNIT, OAKLAND
1301 CLAY STREET SUITE 700N
OAKLAND , CA 94612-5203
USCG PROJECT MANAGER:
LT.C BENJAMIN ACEBO
DRAWN BY:
DRAWN BY
DESIGNED BY:
DESIGNED BY
EDITED BY:
EDITED BY
CHECKED BY:
CHECKED BY

USCG PROJECT NUMBER
USCG PROJECT NUMBER
USCG DRAWING SERIES NUMBER
P-1-USCG DRAWING NUMBER
USCG FILENAME
USCG DWG NUM + SHT IT.dwg
SHEET 00 OF 00

U.S COAST GUARD STD ATONS
CEU OAKLAND
OAKLAND CA

7'x7' TOWER STRUCTURAL
TOWER PARTS

SHEET ID
ATON-STD-08.6

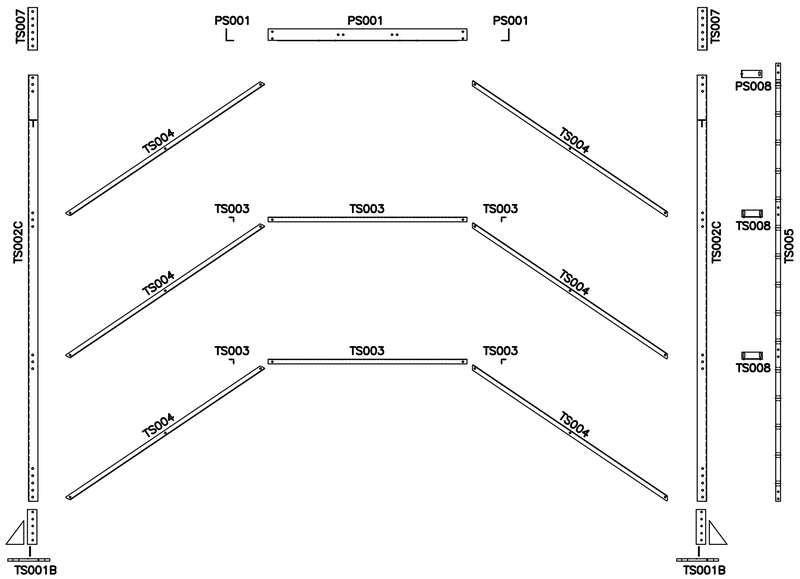

D1 EXPLODED TOWER - SIDE VIEW
SCALE: 3/8"=1'-0"

D5 TOWER BASE PHOTO
SCALE: NONE

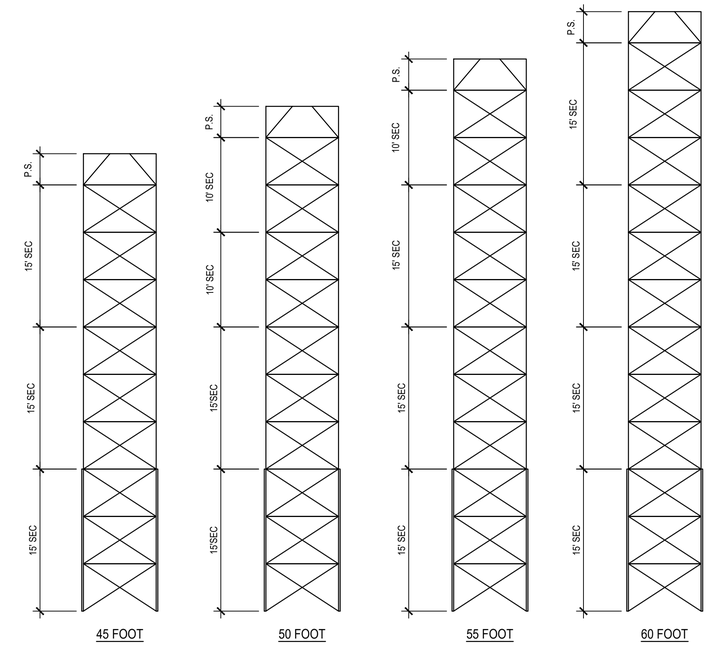

NOTE: LOWEST 15' SEC OF TALL TOWERS REQUIRE TS002C:
6"x6"x1/2"

D8 SCHEMATIC ASSEMBLY DIAGRAM
SCALE: 1/8"=1'-0"

PARTS			
PART NUMBER	NUMBER OF PARTS		DESCRIPTIONS
	10'	15'	
TS001B	4	4	TALL TOWER BASE COLUMN CONNECTION
TS002A	4	0	TEN FOOT TOWER LEG 4"x4"x1/4"
TS002B	0	4	FIFTEEN FOOT TOWER LEG 4"x4"x1/4"
TS002C	0	4	FIFTEEN FT TALL TOWER LEG 6"x6"x1/2"
TS003	4	8	HORIZONTAL BAR 2"x2"x3/16"
TS004	16	24	CROSS BAR 2"x2"x3/16"
TS005A	2	0	TEN FOOT LADDER LEG 2"x1/4"
TS005B	0	2	FIFTEEN FOOT LADDER LEG 2"x1/4"
TS006	10	15	LADDER RUNG
TS007	4	4	SECTION SPLICE 4"x4"x1/4"
TS008	4	6	LADDER CLIP 3"x3"x3/16"
TS009	2	4	TOWER SECTION SUPPORT 1 1/2"x1 1/2"x3/16"
PS001	4	4	KICK PLATE 5'x3'x3/16"
PS008 L	1	1	UPPER LADDER CLIP LEFT
PS008 R	1	1	UPPER LADDER CLIP RIGHT

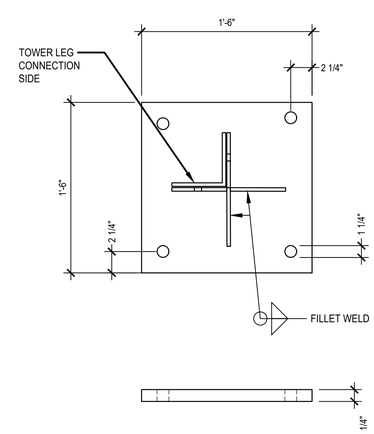

PLAN VIEW

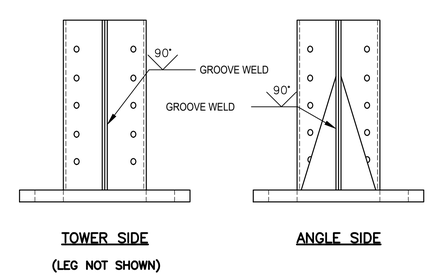

TOWER SIDE
(LEG NOT SHOWN)

ANGLE SIDE

ELEVATION

C8 TS007
SECTION SPLICE 4"x4"x1/4"
SCALE: 1-1/2=1'-0"

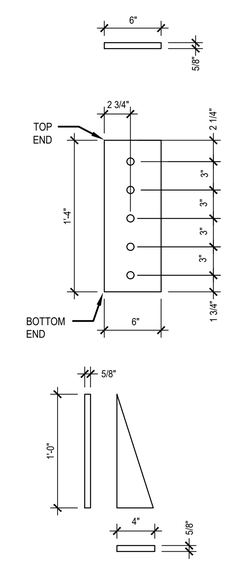

A6 TS001
TOWER BASE COLUMN CONNECTION
SCALE: 1-1/2"=1'-0"

US COAST GUARD
CIVIL ENGINEERING

MARK	DESCRIPTION	DATE
	AS-BUILT	SEP 2018
	FINAL DESIGN	APR 2018
	95% DESIGN	APR 2018
	65% DESIGN	APR 2018
	35% DESIGN	FEB 2018

MEASUREMENT BAR: = 1" (HALF SIZE = 1/2")

A/E COMPANY:
A/E DESIGN COMPANY NAME
AE DESIGN COMPANY CITY, STATE
AE DESIGN COMPANY'S PHONE NUMBER
A/E PROJECT NUMBER
CONSULTING A/E:
CONSULTING COMPANY NAME
CONSULTANT'S CITY, STATE

USCG CIVIL ENGINEERING UNIT, OAKLAND
1301 CLAY STREET SUITE 700N
OAKLAND, CA 94612-5203

USCG PROJECT MANAGER:
LT LG BENJAMIN ACEBO

DRAWN BY:
DRAWN BY:
CHECKED BY:
CHECKED BY:
DESIGNED BY:
DESIGNED BY:
EDITED BY:
EDITED BY:

USCG PROJECT NUMBER
USCG PROJECT NUMBER
USCG DRAWING SERIES NUMBER
P# - USCG DRAWING NUMBER
USCG FILENAME
USCG DWG NUM + SHT IT.dwg
SHEET 00 OF 00

U.S COAST GUARD STD ATONS
CEU OAKLAND
OAKLAND CA

7'x7' TOWER STRUCTURAL
TALL TOWERS

SHEET ID
ATON-STD-08.7

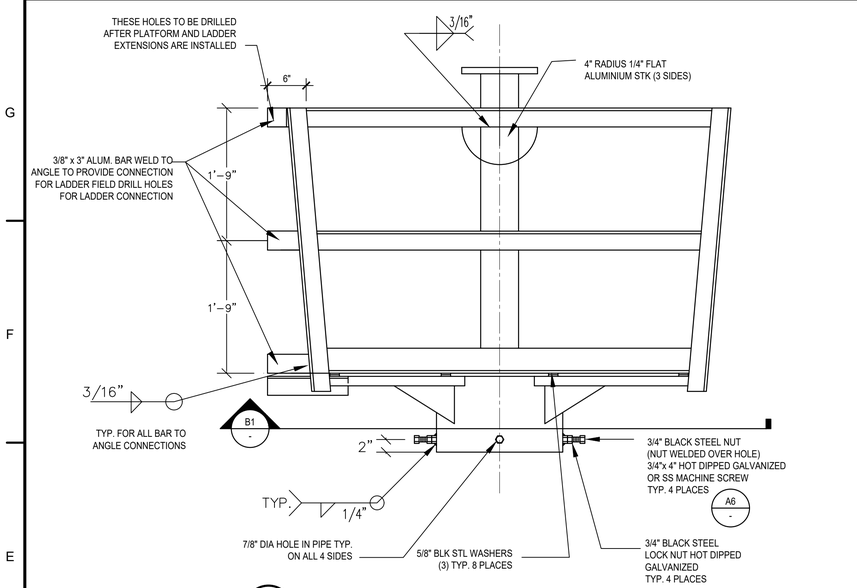

E1 ELEVATION - PLATFORM ASSEMBLY DAYMARK SIDE
SCALE: 1"=1-0"

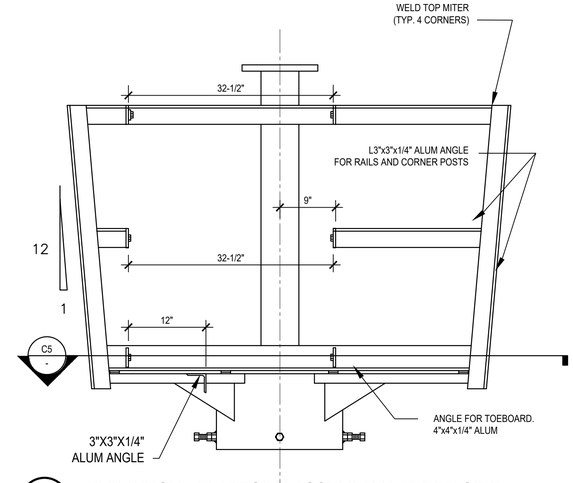

E5 ELEVATION - PLATFORM ASSEMBLY LADDER SIDE
SCALE: 1"=1-0"

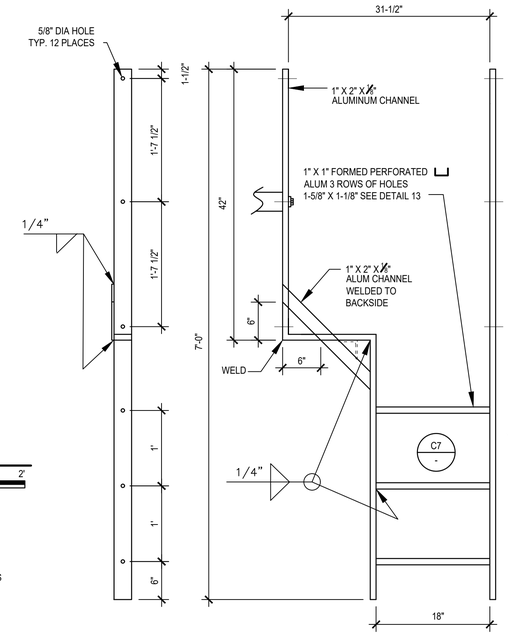

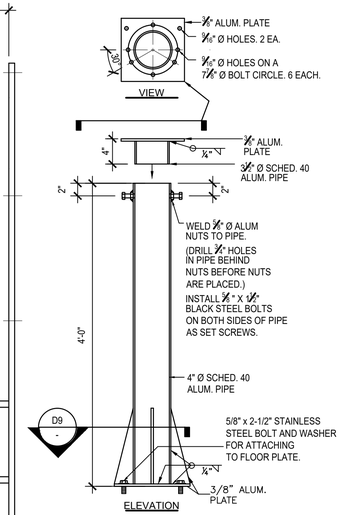

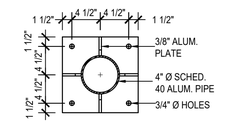

D9 SECTION LANTERN STAND
SCALE: 1"=1-0"

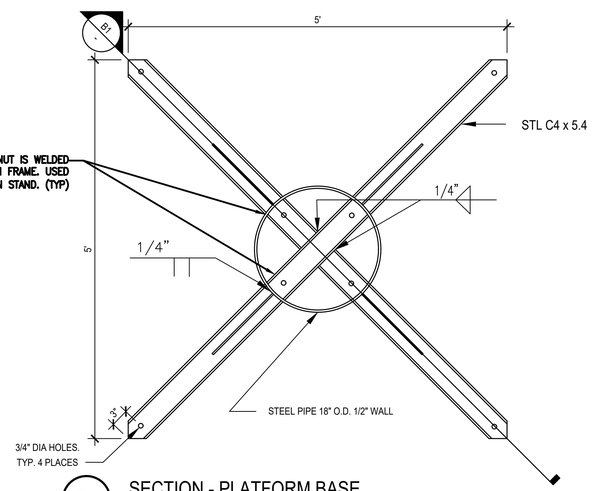

B1 SECTION - PLATFORM BASE
SCALE: 1"=1-0"

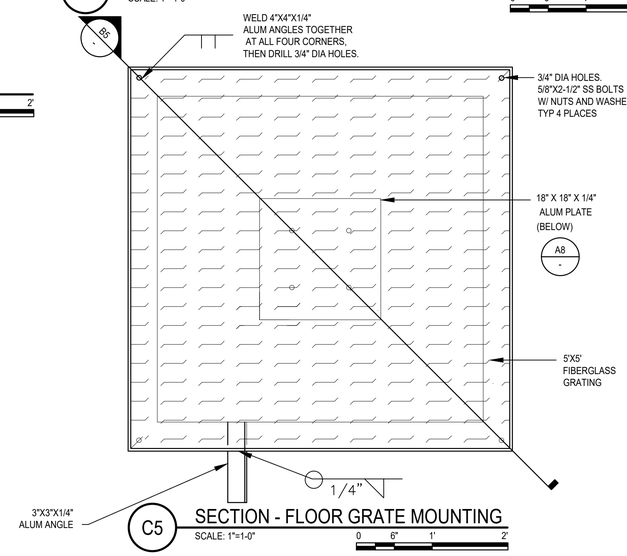

C5 SECTION - FLOOR GRATE MOUNTING
SCALE: 1"=1-0"

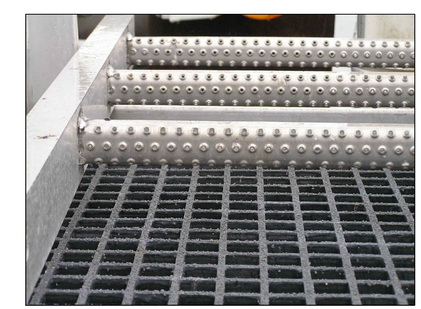

C7 PHOTO OF RUNGS
SCALE: NONE

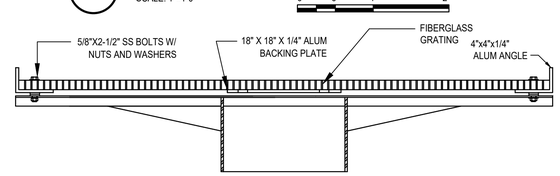

B5 SECTION - FLOOR GRATE MOUNTING
SCALE: 1"=1-0"

GENERAL NOTES

1. ANGLES AND BARS SHALL BE 6061-T6 ALUMINUM.
2. PLATFORM BASE SHALL BE A36 STEEL. HOT-DIP GALVANIZE AFTER FABRICATION IAW ASTM A123.
3. ALL BOLTS, NUTS, AND WASHERS SHALL BE STAINLESS STEEL TYPE 316 OR 304, UNLESS OTHERWISE NOTED.

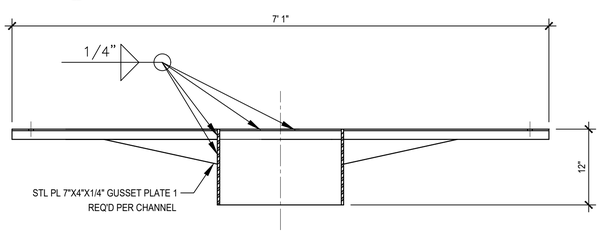

A1 SECTION - PLATFORM BASE
SCALE: 1"=1-0"

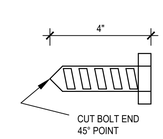

A6 FASTENER - PLATFORM ASSEMBLY
SCALE: 3"=1-0"

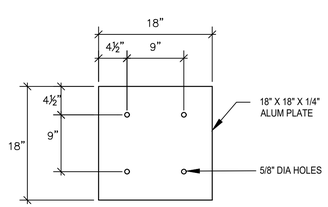

A8 DETAIL BACKING PLATE
SCALE: 1"=1-0"

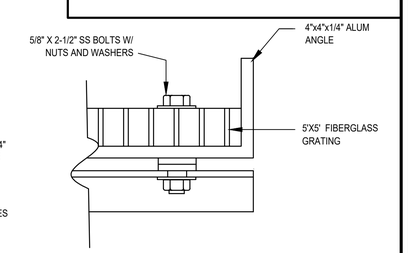

A9 DETAIL CONNECTION
SCALE: 3"=1-0"

U.S.C.G. CE
US COAST GUARD CIVIL ENGINEERING

MARK	DESCRIPTION	DATE
	AS-BUILT	SEP 2018
	FINAL DESIGN	APR 2018
	95% DESIGN	APR 2018
	65% DESIGN	APR 2018
	35% DESIGN	FEB 2018

MEASUREMENT BAR: = 1" (HALF SIZE = 1/2")

A/E COMPANY: A/E DESIGN COMPANY NAME
A/E DESIGN COMPANY CITY, STATE
A/E DESIGN COMPANY'S PHONE NUMBER
A/E PROJECT NUMBER
CONSULTING A/E: CONSULTING COMPANY NAME
CONSULTANT'S CITY, STATE

USCG CIVIL ENGINEERING UNIT, OAKLAND
1301 CLAY STREET SUITE 700N
OAKLAND, CA 94612-5203

USCG PROJECT MANAGER: LT J.G. BENJAMIN ACEBO

DESIGNED BY: DRAWN BY:
DESIGNED BY: DRAWN BY:
EDITED BY: CHECKED BY:
EDITED BY: CHECKED BY:

USCG PROJECT NUMBER
USCG DRAWING SERIES NUMBER P - USCG DRAWING NUMBER
USCG FILENAME CEUO_ATON-STD-09.1.dwg
SHEET OF

U.S COAST GUARD STD ATONS
CEU OAKLAND
OAKLAND CA

5'x5' PLATFORM

SHEET ID
ATON-STD-09.1

GENERAL NOTES

1. ALL MEASUREMENTS IN INCHES

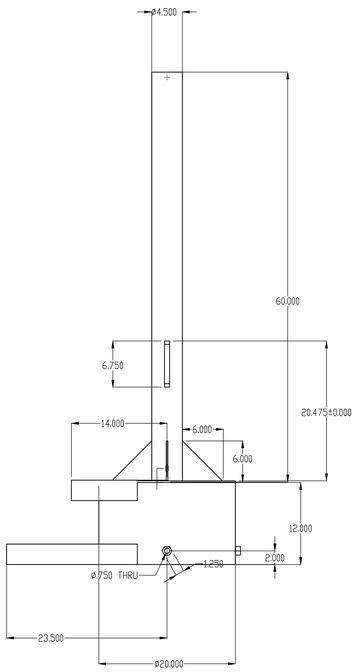

ELEVATION W/ ARM REMOVED — D3

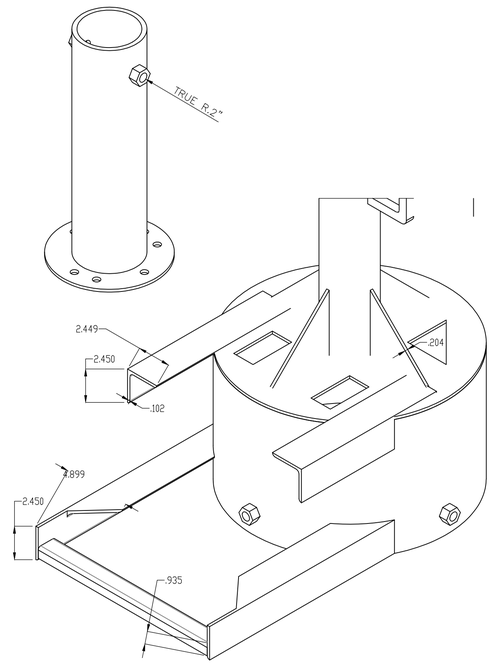

PLATFORM BASE ISOMETRIC VIEW — D5

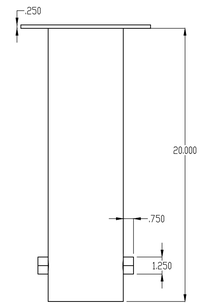

LANTEN MOUNT ELEVATION — E7

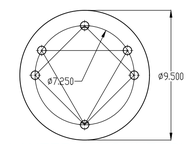

LANTERN MOUNT PLAN — D7

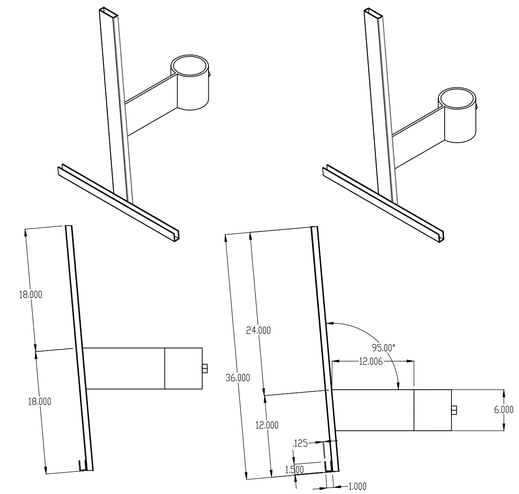

DAYBOARD ARMS ELEVATION/ISO — E7

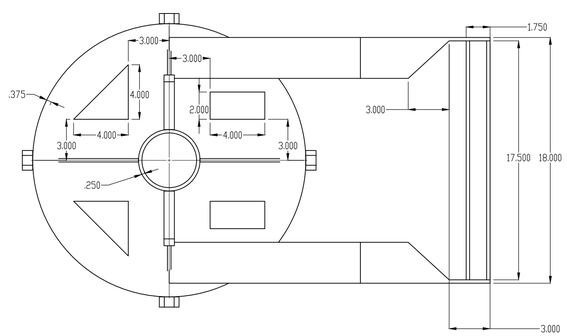

PLATFORM BASE PLAN — A4

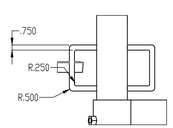

GRAB HANDLES — C5

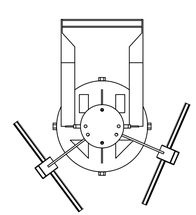

PLAN VIEW — A5

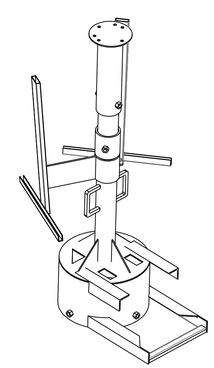

HEADER ASSEMBLY ISOMETRIC — A7

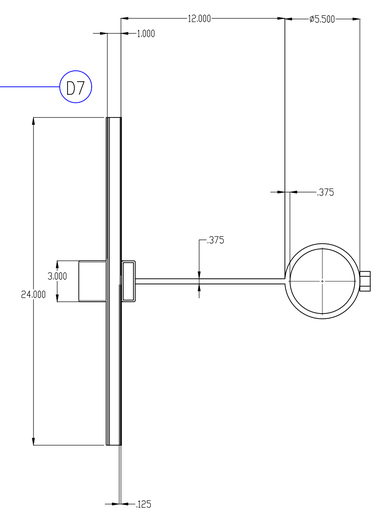

DAYBOARD ARM PLAN — A9

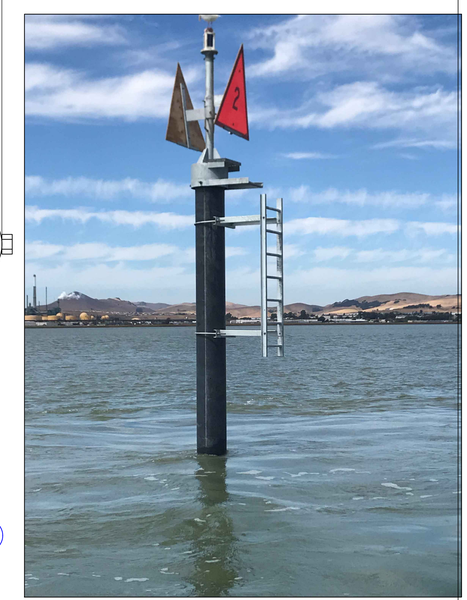

US COAST GUARD
CIVIL ENGINEERING

MARK	DESCRIPTION	DATE
	AS-BUILT	SEP 2018
	FINAL DESIGN	APR 2018
	95% DESIGN	APR 2018
	65% DESIGN	APR 2018
	35% DESIGN	FEB 2018

MEASUREMENT BAR: = 1" (HALF SIZE = 1/2")

A/E COMPANY:
A/E DESIGN COMPANY NAME
AE DESIGN COMPANY CITY, STATE
AE DESIGN COMPANY'S PHONE NUMBER
A/E PROJECT NUMBER
CONSULTING A/E:
CONSULTING COMPANY NAME
CONSULTANT'S CITY, STATE

USCG CIVIL ENGINEERING UNIT, OAKLAND
1301 CLAY STREET SUITE 700N
OAKLAND , CA 94612-5203
USCG PROJECT MANAGER:
LT.G BENJAMIN ACEBO

DRAWN BY:
DRAWN BY
CHECKED BY:
CHECKED BY

DESIGNED BY:
DESIGNED BY
EDITED BY:
EDITED BY

USCG PROJECT NUMBER
USCG PROJECT NUMBER
USCG DRAWING SERIES NUMBER
P-1 USCG DRAWING NUMBER
USCG FILENAME
USCG DWG NUM + SHT IT.dwg
SHEET 00 OF 00

U.S COAST GUARD STD ATONS
CEU OAKLAND
OAKLAND CA

PLATFORMS
REDUCED HEADER SYSTEM

SHEET ID
ATON-STD-09.2

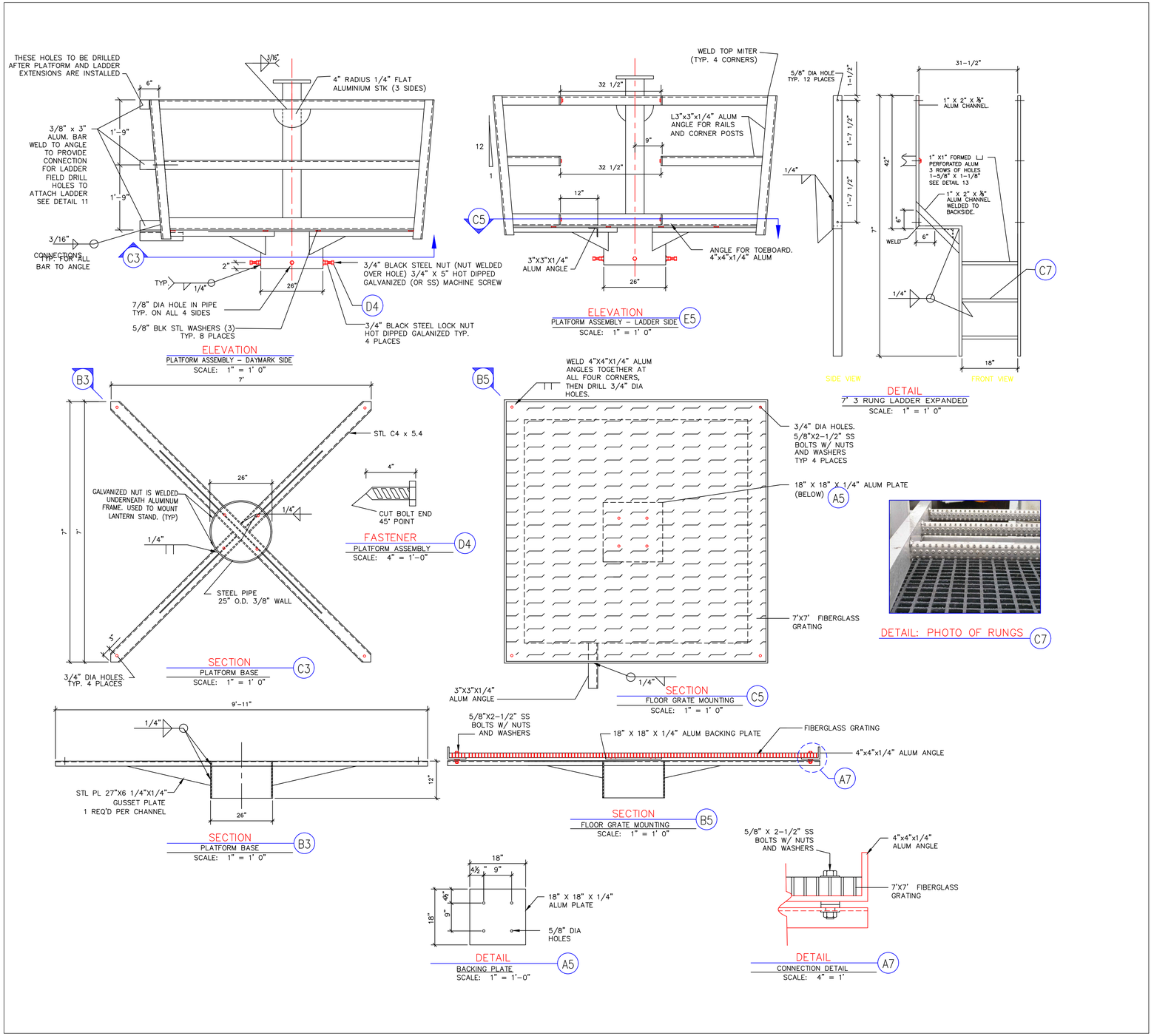

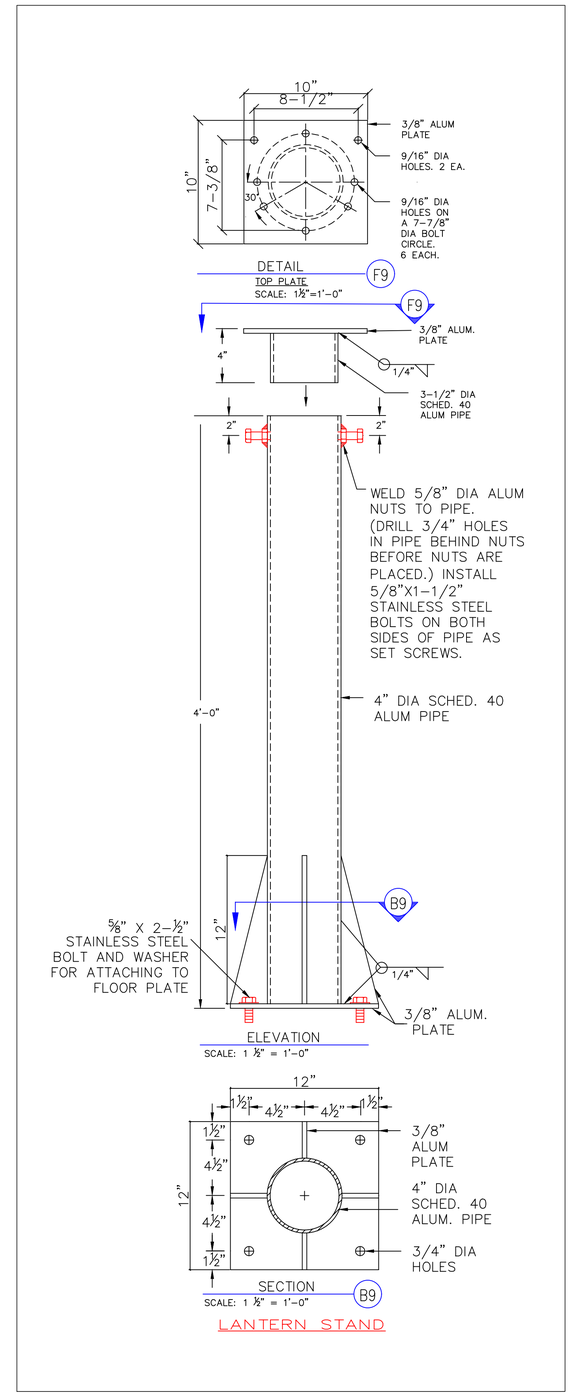

U.S.C.G.
US COAST GUARD CIVIL ENGINEERING

MARK	DESCRIPTION	DATE
	AS-BUILT	SEP 2018
	FINAL DESIGN	APR 2018
	95% DESIGN	APR 2018
	65% DESIGN	APR 2018
	35% DESIGN	FEB 2018

MEASUREMENT BAR: = 1" (HALF SIZE = 1/2")

A/E COMPANY:
A/E DESIGN COMPANY NAME
A/E DESIGN COMPANY CITY, STATE
A/E DESIGN COMPANY'S PHONE NUMBER
A/E PROJECT NUMBER
CONSULTING A/E:
CONSULTING COMPANY NAME
CONSULTANT'S CITY, STATE

USCG CIVIL ENGINEERING UNIT, OAKLAND
1301 CLAY STREET SUITE 700N
OAKLAND, CA 94612-5203
USCG PROJECT MANAGER:
LT.C BENJAMIN ACEBO
DRAWN BY:
DRAWN BY
DESIGNED BY:
DESIGNED BY
EDITED BY:
EDITED BY
CHECKED BY:
CHECKED BY

USCG PROJECT NUMBER
USCG DRAWING SERIES NUMBER
P-1-USCG DRAWING NUMBER
USCG FILENAME
CEUO_ATON-STD-09.1.dwg
SHEET
OF

U.S COAST GUARD STD ATONS
CEU OAKLAND
OAKLAND CA

7'x7' PLATFORM

SHEET ID
ATON-STD-09.3

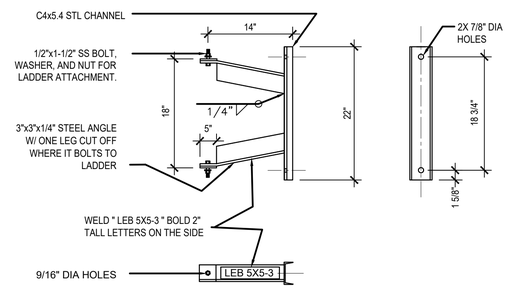

E1 DETAIL: LADDER EXTENSION BRACKET, P/N: LEB 5x5-3

SCALE: 1/2"=1-0"

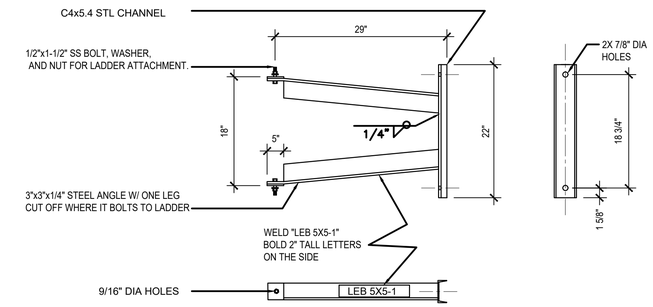

E4 DETAIL: LADDER EXTENSION BRACKET, P/N: LEB 5x5-1

SCALE: 1/2"=1-0"

NOTE:

1. ALL PARTS HOT DIPPED GALVANIZED.
2. BRUSH HOOP THREADS DURING GALVANIZING TO PREVENT ACCUMULATIONS ON THE THREADS THAT WOULD OREVENT NUTS FROM FOLLOWING THREADS.

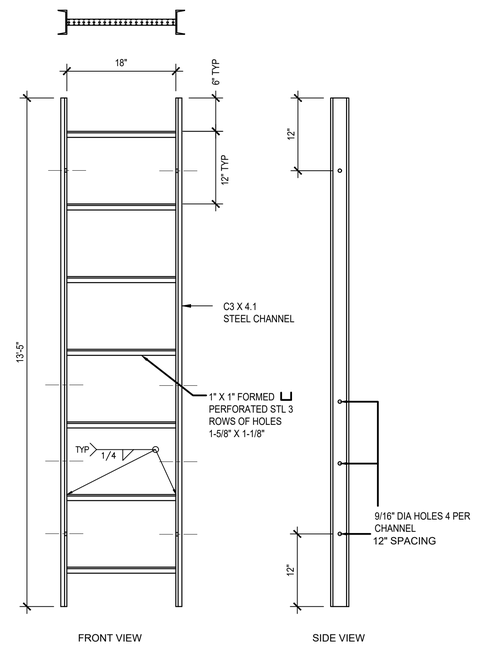

C8 ELEVATION: LADDER EXTENSION

SCALE: 1/2"=1-0"

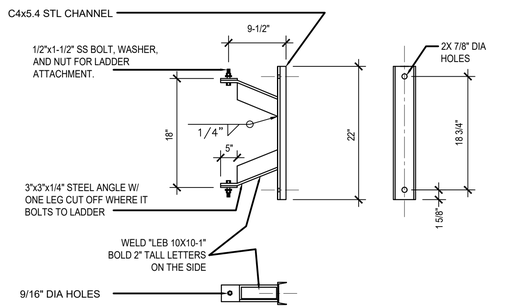

C1 DETAIL: LADDER EXTENION BRACKET, LEB 10x10-1

SCALE: 1/2"=1-0"

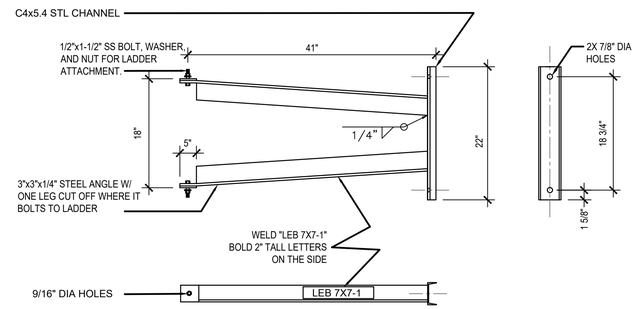

C4 DETAIL: LADDER EXTENION BRACKET, LEB 7x7-1

SCALE: 1/2"=1-0"

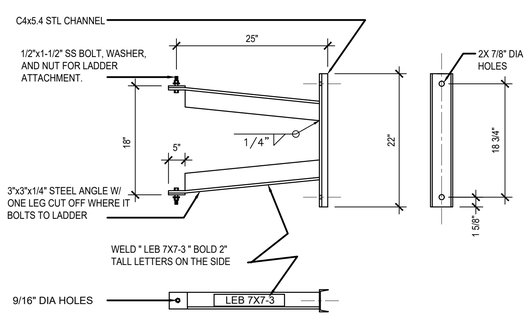

A1 DETAIL: LADDER EXTENION BRACKET, P/N: 7x7-3

SCALE: 1/2"=1-0"

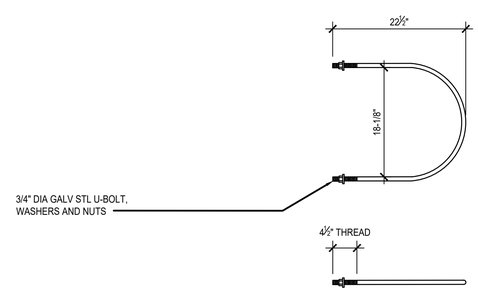

A4 DETAIL: HOOP

SCALE: 1/2"=1-0"

A8 PHOTO

SCALE: NONE

US COAST GUARD CIVIL ENGINEERING

MARK	DESCRIPTION	DATE
	AS-BUILT	SEP 2018
	FINAL DESIGN	APR 2018
	95% DESIGN	APR 2018
	65% DESIGN	APR 2018
	35% DESIGN	FEB 2018

MEASUREMENT BAR: = 1" (HALF SIZE = 1/2")

USCG PROJECT NUMBER

USCG DRAWING SERIES NUMBER
P# - USCG DRAWING NUMBER

USCG FILENAME
CEUO_ATON-STD-11.dwg

SHEET OF

A/E COMPANY:
A/E DESIGN COMPANY NAME
AE DESIGN COMPANY CITY, STATE
AE DESIGN COMPANY'S PHONE NUMBER
A/E PROJECT NUMBER

CONSULTING A/E:
CONSULTING COMPANY NAME
CONSULTANT'S CITY, STATE

USCG CIVIL ENGINEERING UNIT, OAKLAND
1301 CLAY STREET SUITE 700N
OAKLAND, CA 94612-5203

USCG PROJECT MANAGER:
USCG DESIGN PROJECT MANAGER

DESIGNED BY: DRAWN BY:
DESIGNED BY DRAWN BY
EDITED BY: CHECKED BY:
EDITED BY CHECKED BY

U.S COAST GUARD STD ATONS
CEU OAKLAND
OAKLAND CA

LADDER DETAILS

SHEET ID
ATON-STD-11

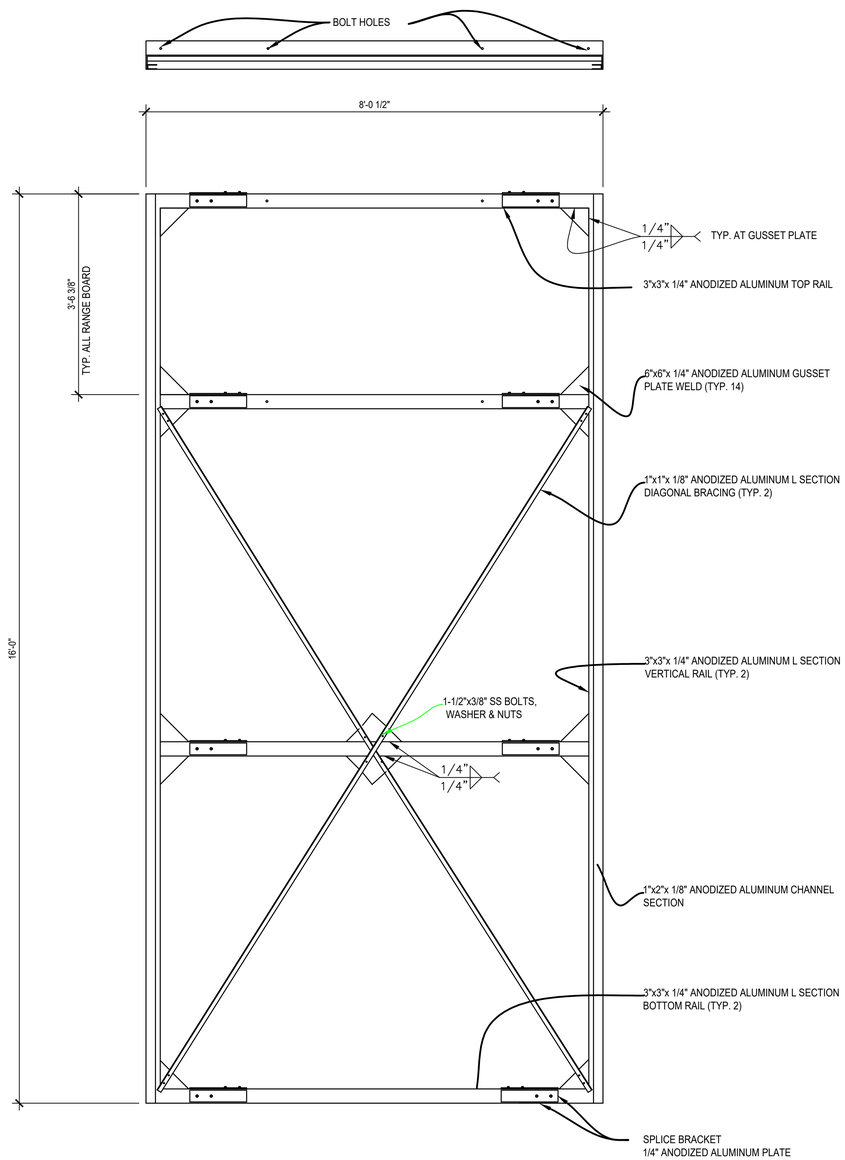

A4 8' RANGE FRAME -FOR USE ON PILE STRUCTURES

SCALE: 3/4"=1-0"

0 1' 2' 4'

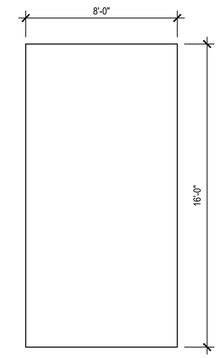

E8 8' RANGE FRAME

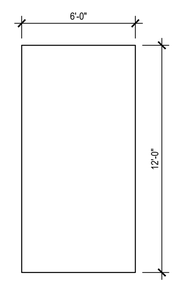

E8 6' RANGE FRAME

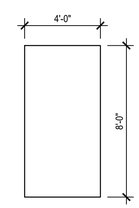

E8 4' RANGE FRAME

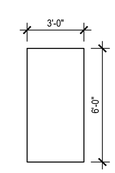

E8 3' RANGE FRAME

A8 NOMENCLATURE GUIDE FOR STANDARD SIZE DAYBOARDS

SCALE: 1/4"=1-0"

0 2' 4' 8'

US COAST GUARD
CIVIL ENGINEERING

MARK	DESCRIPTION	DATE
	AS-BUILT	SEP 2018
	FINAL DESIGN	APR 2018
	95% DESIGN	APR 2018
	65% DESIGN	APR 2018
	35% DESIGN	FEB 2018

MEASUREMENT BAR: = 1" (HALF SIZE = 1/2")

A/E COMPANY:
A/E DESIGN COMPANY NAME
AE DESIGN COMPANY CITY, STATE
AE DESIGN COMPANY'S PHONE NUMBER
A/E PROJECT NUMBER

CONSULTING A/E:
CONSULTING COMPANY NAME
CONSULTANT'S CITY, STATE

USCG CIVIL ENGINEERING UNIT OAKLAND
1301 CLAY STREET SUITE 700N
OAKLAND, CA 94612-5203

USCG PROJECT MANAGER:
LTJG BENJAMIN ACEBO

DRAWN BY:
DRAWN BY
CHECKED BY:
CHECKED BY

DESIGNED BY:
DESIGNED BY
EDITED BY:
EDITED BY

USCG PROJECT NUMBER

USCG DRAWING SERIES NUMBER
P7 - USCG DRAWING NUMBER

USCG FILENAME:
CEUO_ATON-STD-12.1.dwg

SHEET OF

U.S COAST GUARD STD ATONS
CEU OAKLAND
OAKLAND CA

RANGE BOARD FRAMES
PILE STRUCTURES

SHEET ID

ATON-STD-12.1

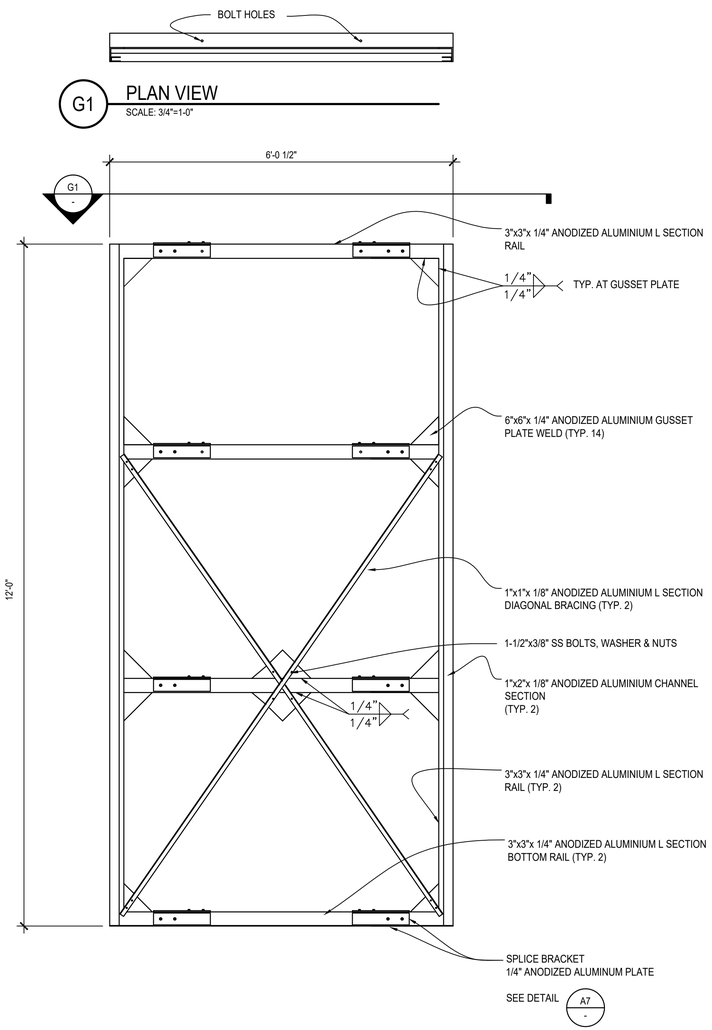

C1 6' RANGE FRAME - FOR USE ON PILE STRUCTURE
SCALE: 3/4"=1-0"

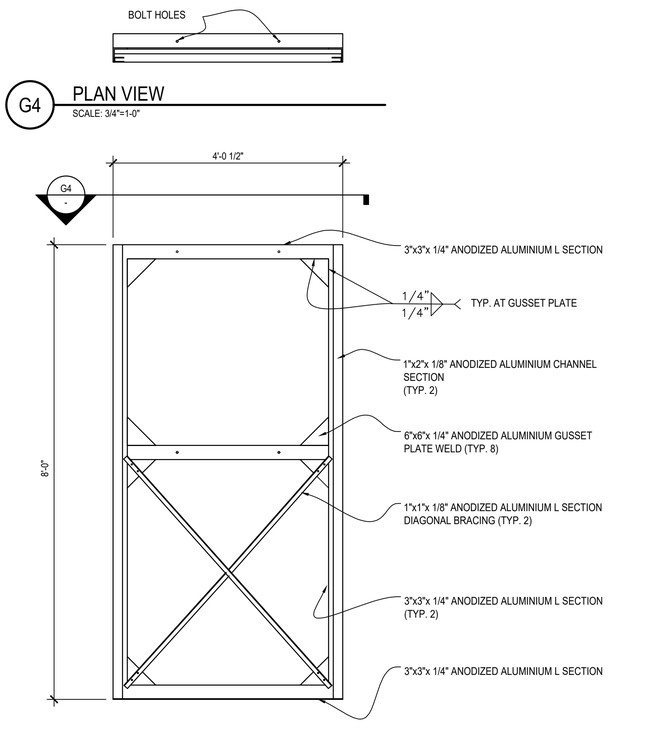

D5 3' RANGE FRAME - FOR USE ON PILE STRUCTURE
SCALE: 3/4"=1-0"

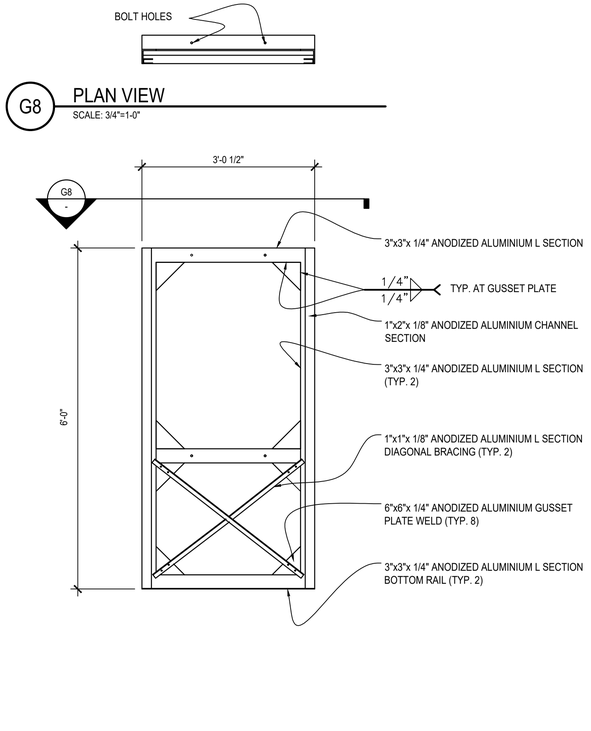

D7 4' RANGE FRAME - FOR USE ON PILE STRUCTURE
SCALE: 3/4"=1-0"

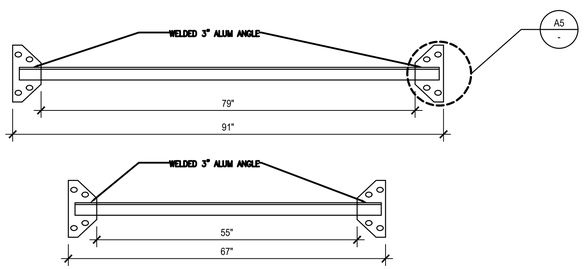

A1 8' AND 6' MODIFIED CROSS RAILS - FOR USE ON PILE STRUCTURES
SCALE: 3/4"=1-0"

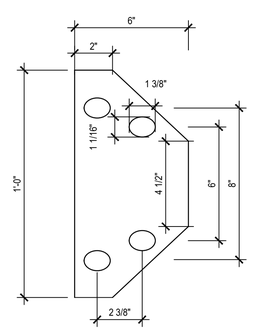

A5 DETAIL
SCALE: 3"=1-0"

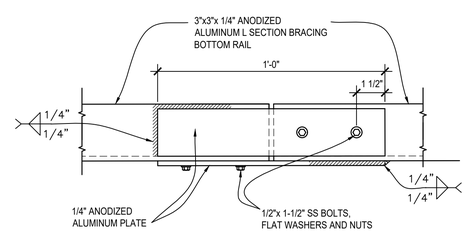

A7 SPLICE BRACKET DETAIL
SCALE: 3"=1-0"

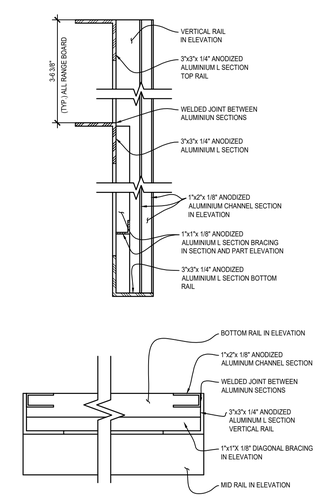

A9 VERTICAL AND HORIZONTAL RAIL DETAIL
SCALE: 3"=1-0"

US COAST GUARD
CIVIL ENGINEERING

MARK	DESCRIPTION	DATE
	AS-BUILT	SEP 2018
	FINAL DESIGN	APR 2018
	95% DESIGN	APR 2018
	65% DESIGN	APR 2018
	35% DESIGN	FEB 2018

MEASUREMENT BAR: = 1" (HALF SIZE = 1/2")

A/E COMPANY: A/E DESIGN COMPANY NAME
AE DESIGN COMPANY CITY, STATE
AE DESIGN COMPANY'S PHONE NUMBER
A/E PROJECT NUMBER
CONSULTING A/E: CONSULTING COMPANY NAME
CONSULTANT'S CITY, STATE

USCG CIVIL ENGINEERING UNIT, OAKLAND
1301 CLAY STREET SUITE 700N
OAKLAND, CA 94612-5203

USCG PROJECT MANAGER: LT.G BENJAMIN ACEBO
DESIGNED BY: DRAWN BY:
DESIGNED BY: DRAWN BY:
EDITED BY: CHECKED BY:
EDITED BY: CHECKED BY:

USCG PROJECT NUMBER
USCG DRAWING SERIES NUMBER P # - USCG DRAWING NUMBER
USCG FILENAME CEUO_ATON-STD-12.2.dwg
SHEET OF

U.S COAST GUARD STD ATONS
CEU OAKLAND
OAKLAND CA

RANGE BOARD FRAMES
PILE STRUCTURES

SHEET ID
ATON-STD-12.2

GENERAL NOTES

1. RANGE FRAME MUST BE SHIPPED WITH A 5FT LONG PIECE OF 3 INCH ALUMINUM ANGLE. THIS IS USED TO FIELD DRILL AND ATTACH TO THE KICK PLATE (PS001) FROM ATON-STD-08 DRAWING. THIS ALLOW THE RANGE FRAME TO BE BOLTED TO THE TOWER.

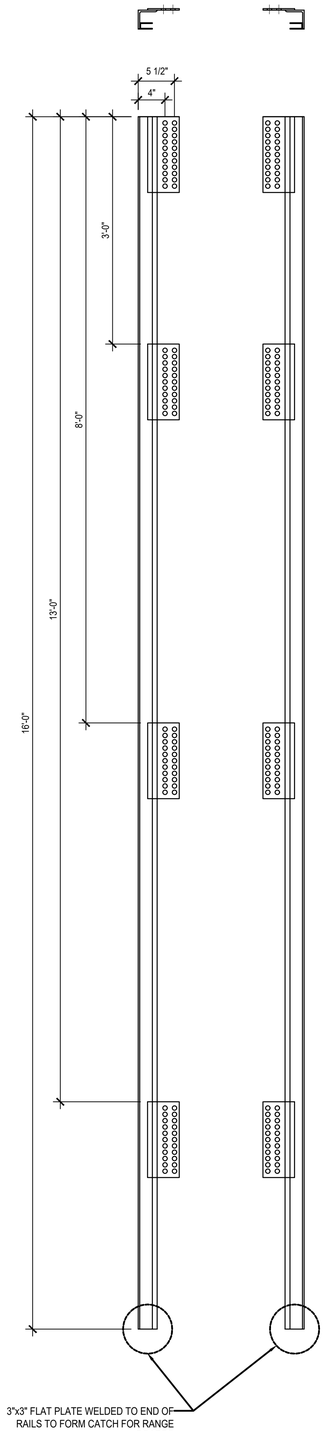

A1 8' RANGE FRAME 8'x16' VERTICAL RAILS FOR USE ON TOWER STRUCTURE
SCALE: 1"=1-0"

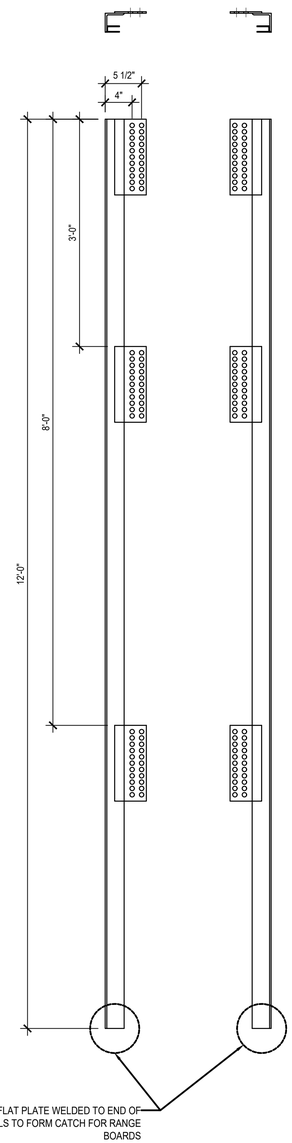

A3 6' RANGE FRAME 6'x12' VERTICAL RAILS FOR USE ON TOWER STRUCTURE
SCALE: 1"=1-0"

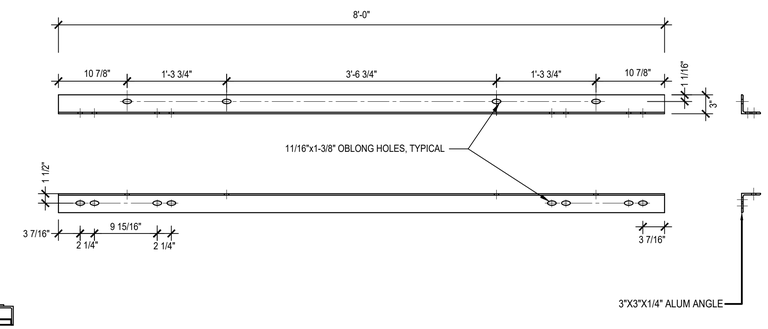

F8 8' CROSS RAIL FOR USE ON TOWER STRUCTURE
SCALE: 1"=1-0"

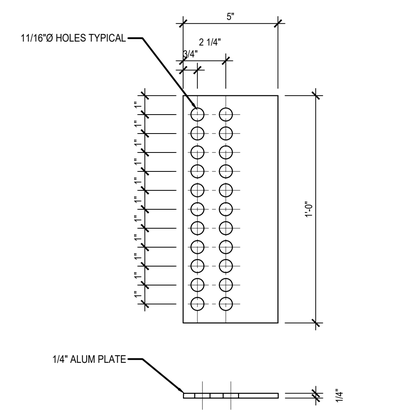

C6 BOLT PLATE
SCALE: 3"=1-0"

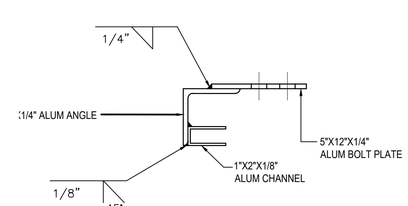

A6 VERTICAL RAIL WELDMENT
SCALE: 3"=1-0"

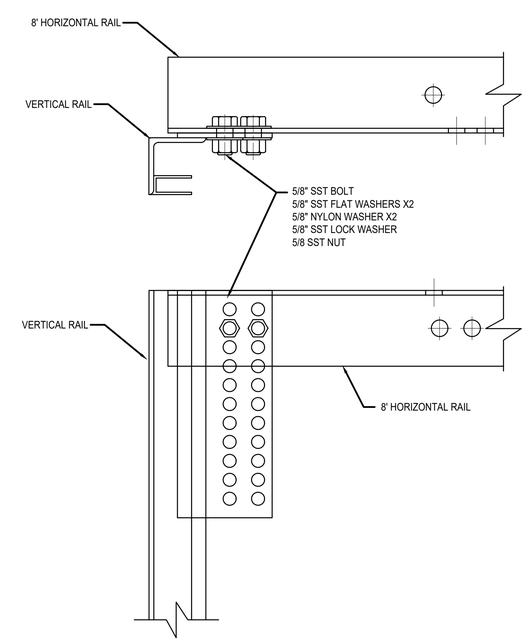

A9 VERTICAL AND HORIZONTAL RAIL CONNECTION
SCALE: 3"=1-0"

U.S.C.G. CE
US COAST GUARD
CIVIL ENGINEERING

MARK	DESCRIPTION	DATE
	AS-BUILT	SEP 2018
	FINAL DESIGN	APR 2018
	95% DESIGN	APR 2018
	65% DESIGN	APR 2018
	35% DESIGN	FEB 2018

MEASUREMENT BAR: = 1" (HALF SIZE = 1/2")

A/E COMPANY:
A/E DESIGN COMPANY NAME
AE DESIGN COMPANY CITY, STATE
AE DESIGN COMPANY'S PHONE NUMBER
A/E PROJECT NUMBER
CONSULTING A/E:
CONSULTING COMPANY NAME
CONSULTANT'S CITY, STATE

USCG CIVIL ENGINEERING UNIT, OAKLAND
1301 CLAY STREET SUITE 700N
OAKLAND, CA 94612-5203
USCG PROJECT MANAGER:
LT.C BENJAMIN ACEBO

USCG PROJECT NUMBER
USCG DRAWING SERIES NUMBER
P-1 USCG DRAWING NUMBER
USCG FILENAME
CEUO_ATON-STD-12.3.dwg

DESIGNED BY:	DRAWN BY:
DESIGNED BY:	DRAWN BY
EDITED BY:	CHECKED BY:
EDITED BY	CHECKED BY

SHEET OF

U.S COAST GUARD STD ATONS
CEU OAKLAND
OAKLAND CA

RANGE BOARD FRAMES
TOWER STRUCTURES

SHEET ID
ATON-STD-12.3

1234-5267-0003 for Design Build Projects

6789-9287-1200 for Design Build Projects

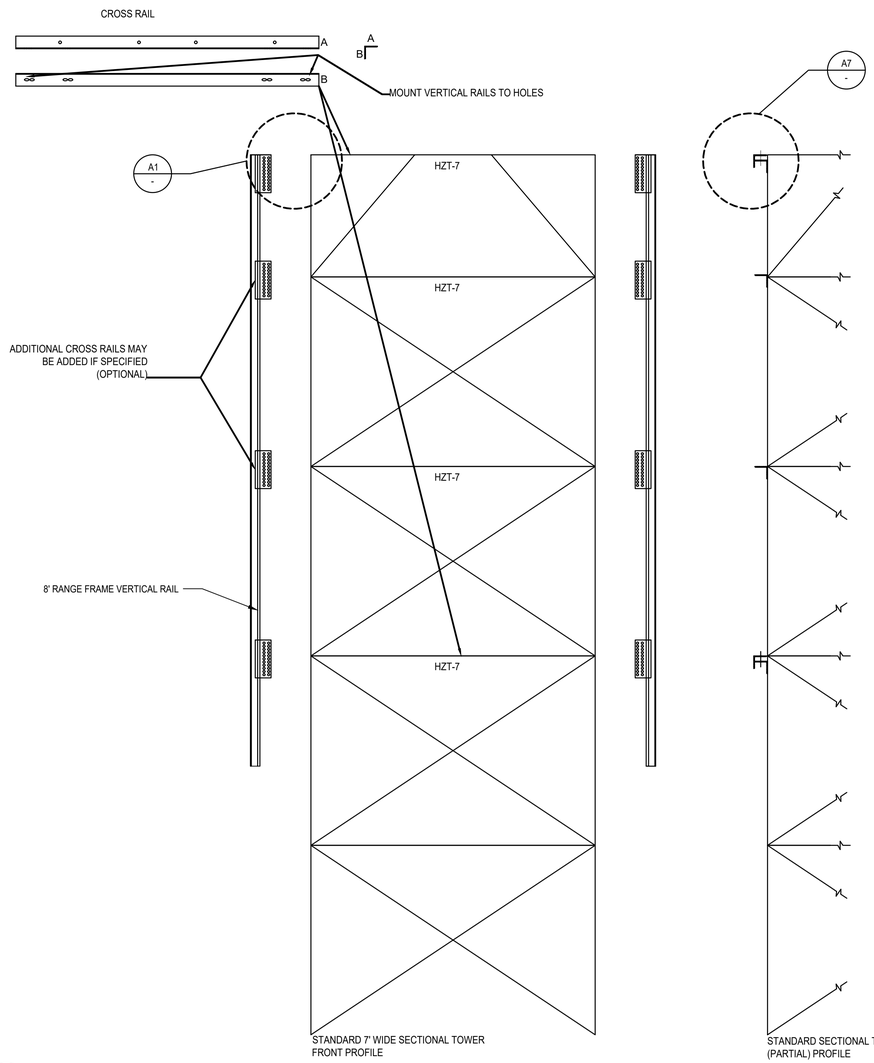

B1 8' RANGE FRAME EXPLODED ASSEMBLY
SCALE: 1/2"=1-0" 0 1' 2' 4'

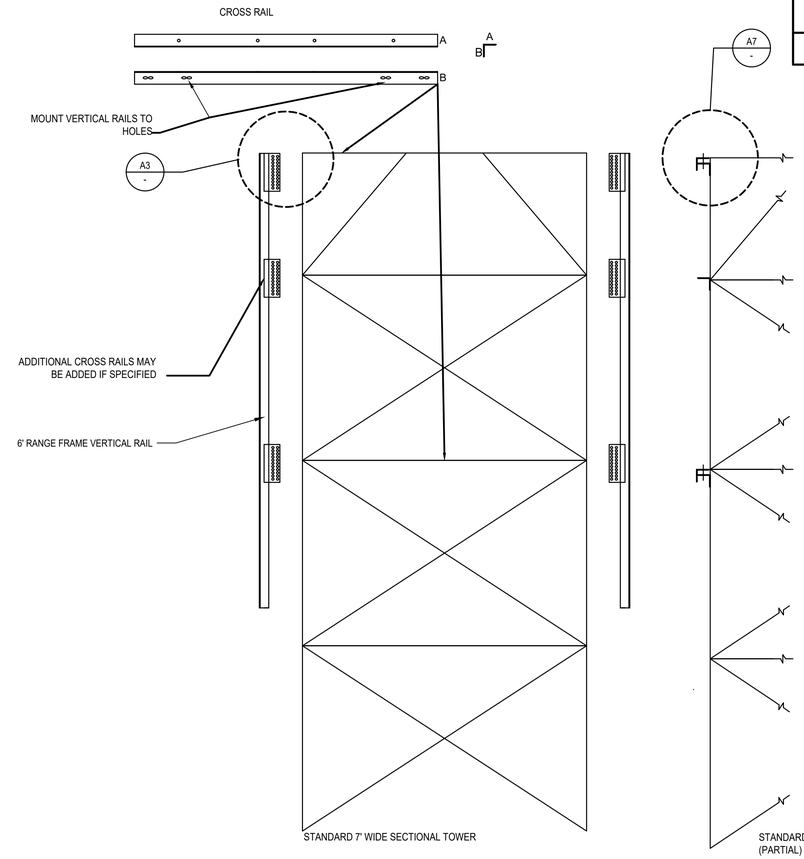

C6 6' RANGE FRAME EXPLODED ASSEMBLY
SCALE: 1/2"=1-0" 0 1' 2' 4'

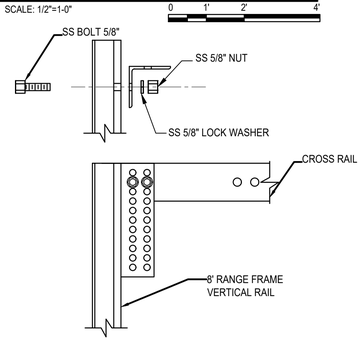

A1 DETAIL: 8' RANGE FRAME CROSS RAIL TO VERTICAL RAIL CONNECTION - TYP
SCALE: 1-1/2"=1-0" 0 6" 1' 2'

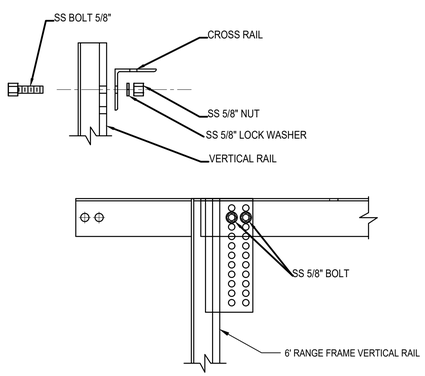

A3 DETAIL: 6' RANGE FRAME CROSS RAIL TO VERTICAL RAIL CONNECTION - TYP
SCALE: 1-1/2"=1-0" 0 6" 1' 2'

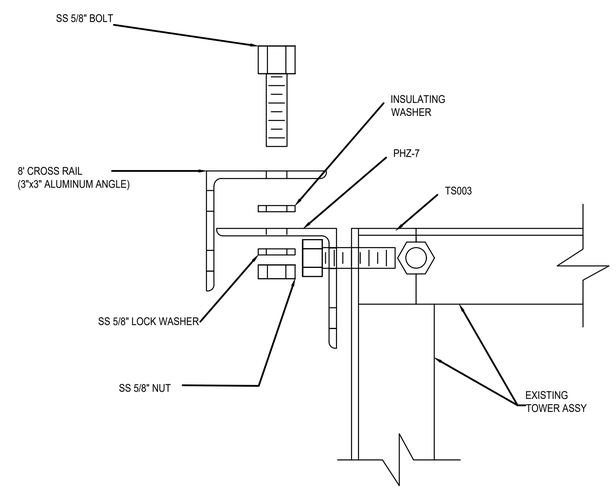

A7 DETAIL: TYP ALL CONNECTIONS CROSS RAIL TO TOWER
SCALE: 3"=1-0" 0 3" 6" 1'

GENERAL NOTES

1. TOWER PART NUMBERS REFERENCED FROM ATON-STD-08.

US COAST GUARD CIVIL ENGINEERING

MARK	DESCRIPTION	DATE
	AS-BUILT	SEP 2018
	FINAL DESIGN	APR 2018
	95% DESIGN	APR 2018
	65% DESIGN	APR 2018
	35% DESIGN	FEB 2018

MEASUREMENT BAR: = 1" (HALF SIZE = 1/2")

USCG PROJECT NUMBER

USCG DRAWING SERIES NUMBER
P - USCG DRAWING NUMBER

USCG CIVIL ENGINEERING UNIT, OAKLAND
1301 CLAY STREET SUITE 700N
OAKLAND, CA 94612-5203

USCG PROJECT MANAGER:
LTJG BENJAMIN ACEBO

A/E COMPANY:
A/E DESIGN COMPANY NAME
AE DESIGN COMPANY CITY, STATE
AE DESIGN COMPANY'S PHONE NUMBER
A/E PROJECT NUMBER

CONSULTING A/E:
CONSULTING COMPANY NAME
CONSULTANT'S CITY, STATE

USCG FILENAME
CEUO_ATON-STD-12.4.dwg

DESIGNED BY:
DESIGNED BY
EDITED BY:
EDITED BY:

DRAWN BY:
DRAWN BY
CHECKED BY:
CHECKED BY

SHEET OF

U.S COAST GUARD STD ATONS
CEU OAKLAND
OAKLAND CA

RANGE BOARD FRAMES
TOWER STRUCTURES

SHEET ID
ATON-STD-12.4

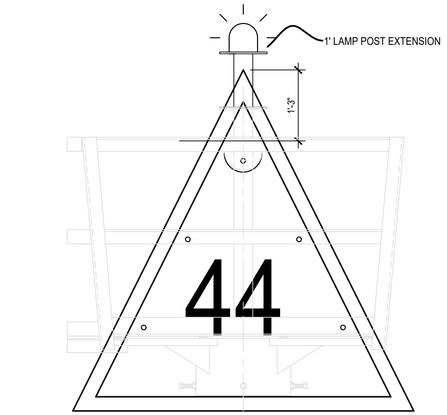

E1 6TR - 6'x6' TRIANGLE RED
SCALE: 3/4"=1-0" 0 1' 2' 4'

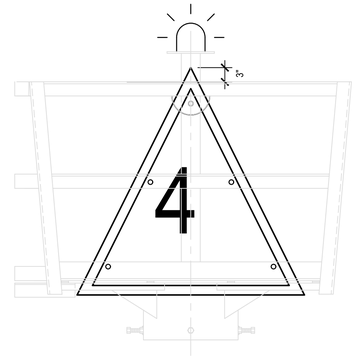

E4 4TR - 4'x4' TRIANGLE RED
SCALE: 3/4"=1-0" 0 1' 2' 4'

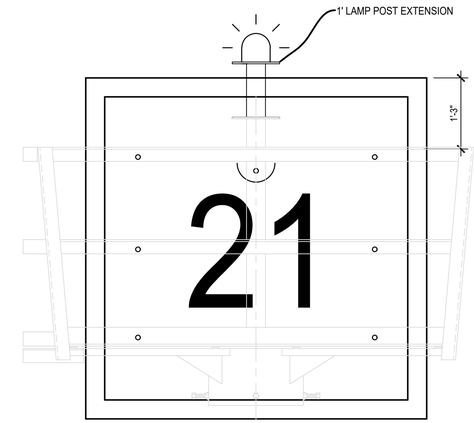

E7 6SG - 6'x6' TRIANGLE RED
SCALE: 3/4"=1-0" 0 1' 2' 4'

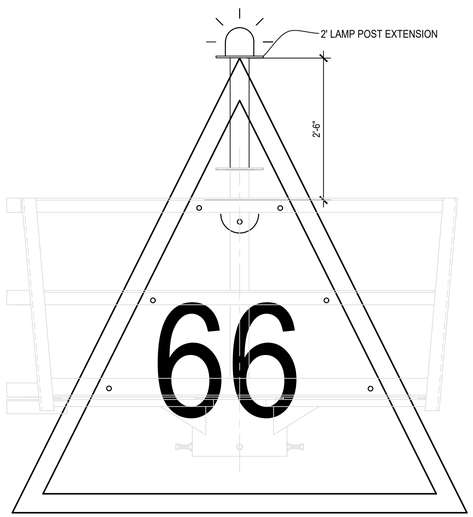

C1 8TR - 8'x8' TRIANGLE RED
SCALE: 3/4"=1-0" 0 1' 2' 4'

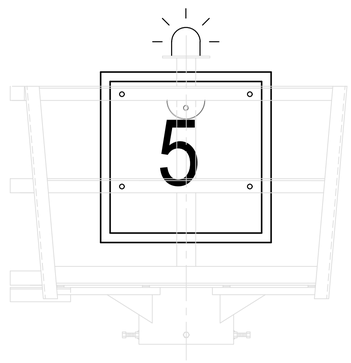

C3 3SG - 3'x3' SQUARE GREEN
SCALE: 3/4"=1-0" 0 1' 2' 4'

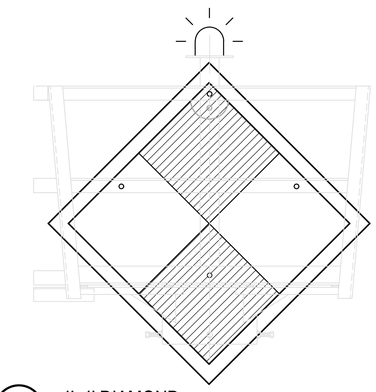

C6 4'x4' DIAMOND
SCALE: 3/4"=1-0" 0 1' 2' 4'

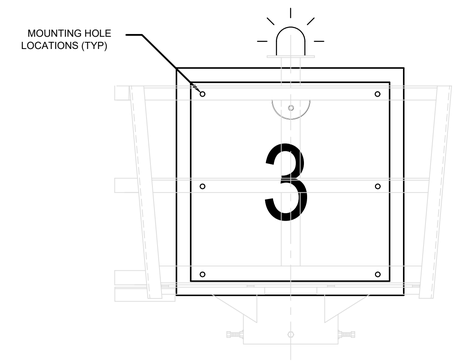

C7 4SG - 4'x4' SQUARE GREEN
SCALE: 3/4"=1-0" 0 1' 2' 4'

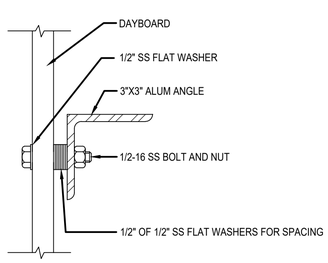

A1 2 SHEET DAYBOARD FASTENERS
SCALE: NTS

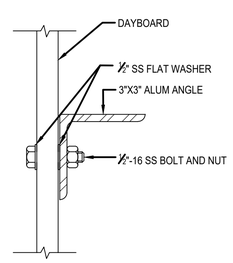

A3 1 SHEET DAYBOARD FASTENERS
SCALE: NTS

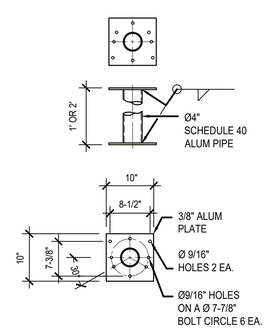

A6 LAMP EXTENSION
SCALE: 3/4"=1-0" 0 1' 2' 4'

GENERAL NOTES

1. ALL DAYBOARD MOUNTING BOLTS TO BE ½" STAINLESS STEEL.
2. INSTALL FLAT WASHERS BETWEEN BOLT HEADS AND DAYBOARD SURFACE.
3. NEVER DRILL HOLES THROUGH EDGE REFLECTIVE BORDER OR NUMERALS.
4. ATTACH LANTERN EXTENTIONS WITH 3/8" STAINLESS STEEL BOLTS. (4 EACH)
5. ALL HOLES THROUGH DAYBOARDS & RAIL FIELD DRILLED.

US COAST GUARD
CIVIL ENGINEERING

MARK	DESCRIPTION	DATE
	AS-BUILT	SEP 2018
	FINAL DESIGN	APR 2018
	95% DESIGN	APR 2018
	65% DESIGN	APR 2018
	35% DESIGN	FEB 2018

MEASUREMENT BAR: = 1" (HALF SIZE = 1/2")

A/E COMPANY:
A/E DESIGN COMPANY NAME
AE DESIGN COMPANY CITY, STATE
AE DESIGN COMPANY'S PHONE NUMBER
A/E PROJECT NUMBER
CONSULTING A/E:
CONSULTING COMPANY NAME
CONSULTANT'S CITY, STATE

USCG CIVIL ENGINEERING UNIT, OAKLAND
1301 CLAY STREET SUITE 700N
OAKLAND, CA 94612-5203
USCG PROJECT MANAGER:
LT.G BENJAMIN ACEBO
DRAWN BY:
DRAWN BY
DESIGNED BY:
DESIGNED BY
EDITED BY:
EDITED BY
CHECKED BY:
CHECKED BY

USCG PROJECT NUMBER
USCG DRAWING SERIES NUMBER
P-1 USCG DRAWING NUMBER
USCG FILENAME
CEUO_ATON-STD-13.dwg
SHEET OF

U.S COAST GUARD STD ATONS
CEU OAKLAND
OAKLAND CA

DAYBOARD MOUNTING DETAILS

SHEET ID
ATON-STD-13

GENERAL NOTES

1. ATTACH AS PER MANUFACTURERS INSTRUCTIONS.
2. USE ONLY FASTENERS PROVIDED OR APPROVED BY MANUFACTURER.

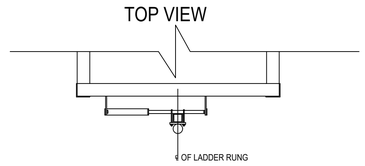

TYPICAL 5'X5' EXAMPLE
SCALE: 1/2" = 1'-0"

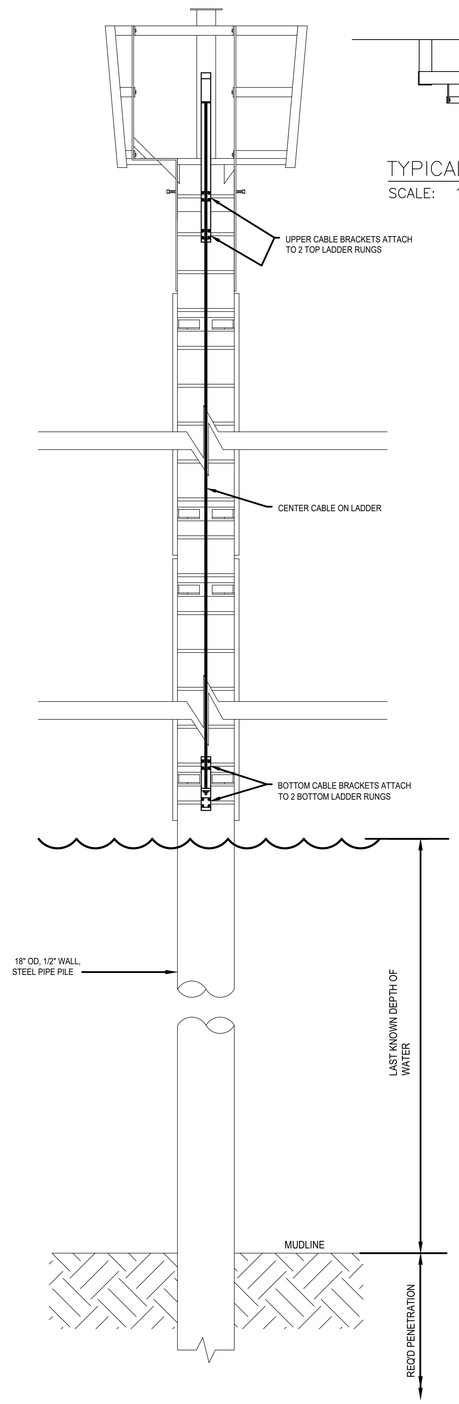

A1 TYPICAL 1 PILE STRUCTURE
SCALE: 1/2"=1-0"
0 1' 2' 4'

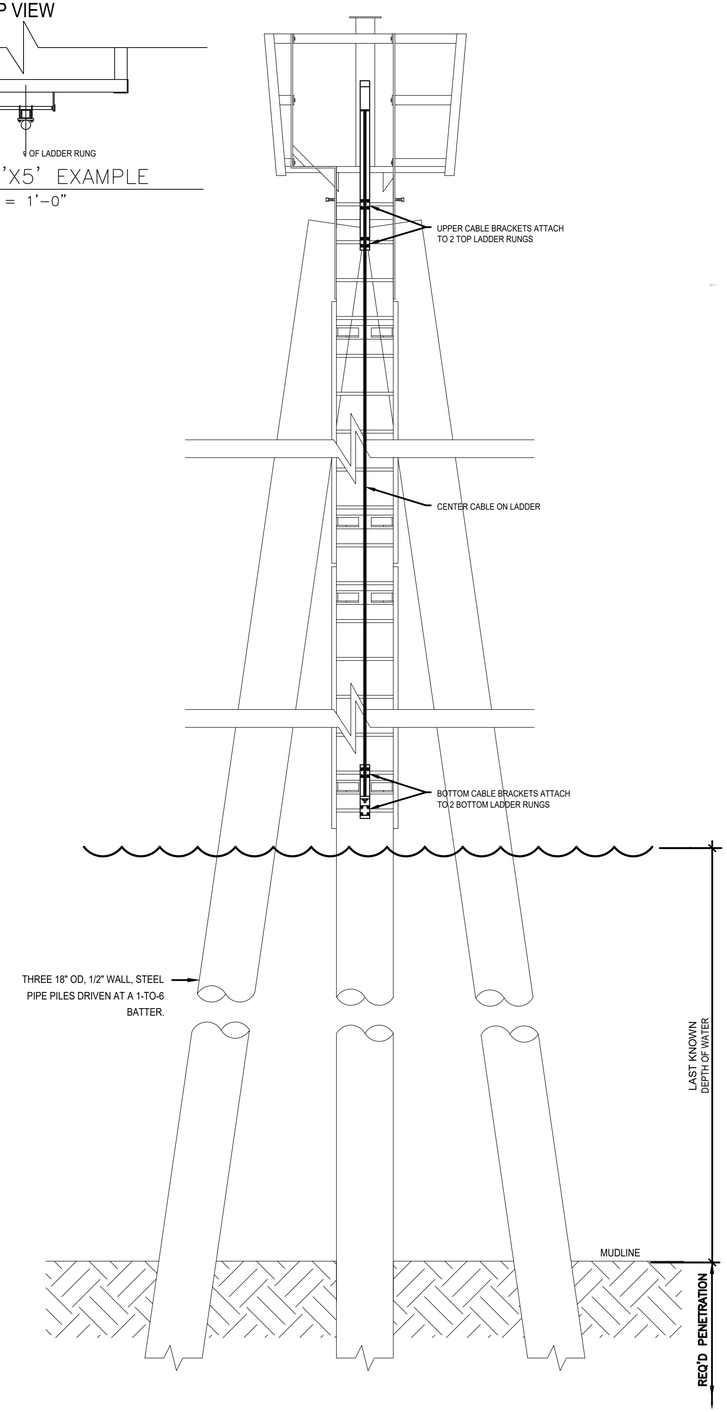

A4 TYPICAL MULTI (3) PILE STRUCTURE
SCALE: 1/2"=1-0"
0 1' 2' 4'

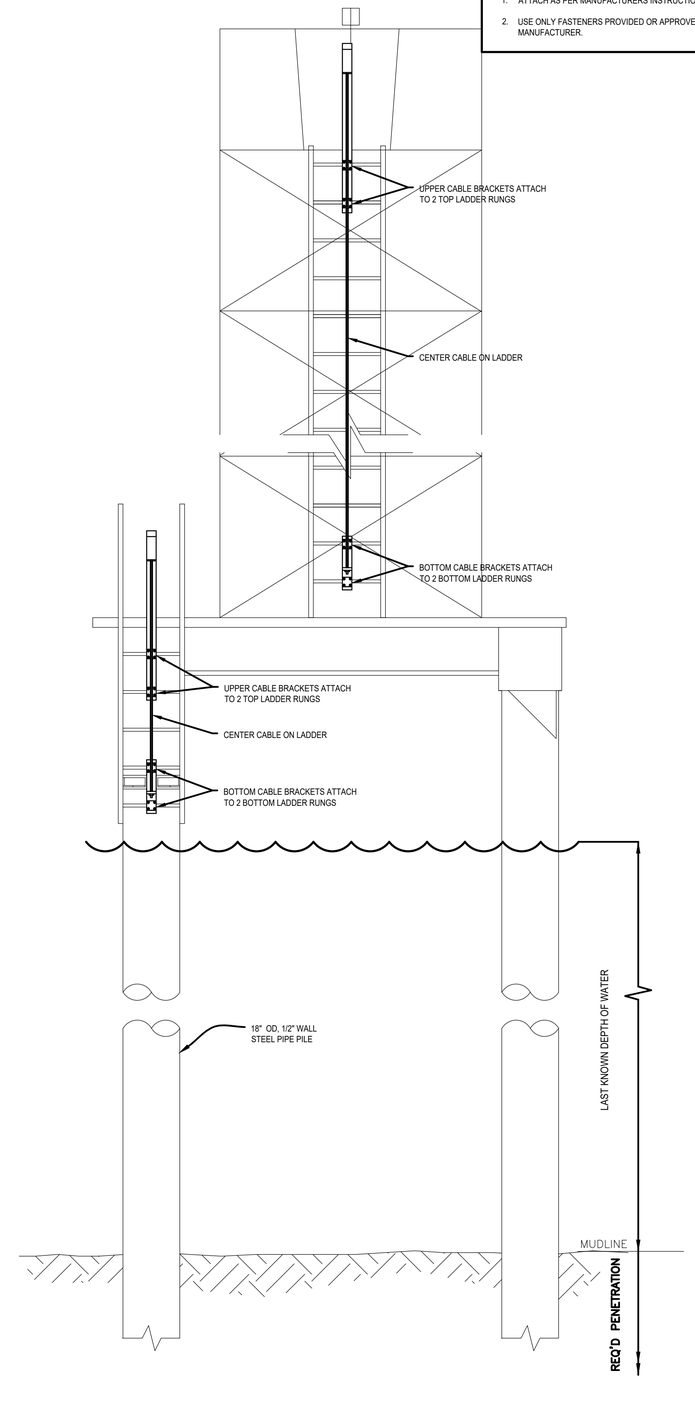

A7 TYPICAL 4 PILE STRUCTURE
SCALE: 1/2"=1-0"
0 1' 2' 4'

US COAST GUARD
CIVIL ENGINEERING

MARK	DESCRIPTION	DATE
	AS-BUILT	SEP 2018
	FINAL DESIGN	APR 2018
	95% DESIGN	APR 2018
	65% DESIGN	APR 2018
	35% DESIGN	FEB 2018

MEASUREMENT BAR: = 1" (HALF SIZE = 1/2")

A/E COMPANY:
A/E DESIGN COMPANY NAME
AE DESIGN COMPANY CITY, STATE
AE DESIGN COMPANY'S PHONE NUMBER
A/E PROJECT NUMBER
CONSULTING A/E:
CONSULTING COMPANY NAME
CONSULTANT'S CITY, STATE

USCG CIVIL ENGINEERING UNIT, OAKLAND
1301 CLAY STREET SUITE 700N
OAKLAND, CA 94612-5203

USCG PROJECT MANAGER:
LT I.G. BENJAMIN ACEBO

DRAWN BY:
DRAWN BY
CHECKED BY:
CHECKED BY

DESIGNED BY:
DESIGNED BY
EDITED BY:
EDITED BY

USCG PROJECT NUMBER

USCG DRAWING SERIES NUMBER
P - USCG DRAWING NUMBER

USCG FILENAME
CEUO_ATON-STD-14.dwg

SHEET OF

U.S COAST GUARD STD ATONS
CEU OAKLAND
OAKLAND CA

SAFETY CLIMB INSTALLATIONS

SHEET ID
ATON-STD-14