Machine Translated by Google

TECHNICAL REPORT ON THE ELECTRICAL SUPPLIES OF THE EL RETAMAL INTERNATIONAL DAM, LOCATED ON THE RIO BRAVO, TAMAULIPAS.

Complementary analysis to CILA-JUA-LPN-21-2023 for the "Rehabilitation and modernization of the lifting systems at Retamal Dam", carried out by the company DUSGEM SA de CV.

Reynosa, Tamaulipas, October 2024.

Machine Translated by Google

Table of Contents.

I. BACKGROUND. 3

Stage 1. 3

Stage 2. 3

Stage 3. 3

Stage 4. 3

Stage 5. 3

Stage 6. 3

Figure 1. Diagram of the HPU system, showing two electric motors. 4

II. SCOPE. 4

III. AIM. 4

IV. DESCRIPTION OF THE EXISTING POWER SUPPLY SYSTEM. 5

Figure 2. Single-line diagram of existing power supply (October 2024). 5

Photograph 1. General view of the El Retamal Dam, note the feeds coming from the ends. 6

Figure 3. Diagram of the mechanisms and current power supply system of El Retamal Dam 6

Photographs 2 and 3. Power line and three-phase transformer of the Mexican section. 6

Figure 3. Preliminary Short Circuit Values provided by the CFE 7

Photographs 4, 5 and 6. Main power supply boards and registers (Mexican section). .. 7

Photographs 7 and 8. Main power supply (US section)..... 8

Photographs 9 and 10. Emergency plants, backup unit (US section). 8

V. SCOPE CONSIDERED IN THE MODERNIZATION STAGE. 9

Figure 4. Diagram of the mechanisms and power supply system in charge of the El Retamal Dam Modernization project. 9

VI. TECHNICAL REQUIREMENTS OF THE NEW LIFTING SYSTEM. 10

Figure 6. List of components that make up the HPU in charge of the El Retamal Dam Modernization project. 10

VII. DESCRIPTION OF THE PROPOSED ARRANGEMENT. 11

Figure 7. Single-line diagram of the El Retamal Dam Modernization project. 12

VIII. CONCLUSIONS AND RECOMMENDATIONS. 13

Machine Translated by Google

REPORT ON THE MAIN FEED OF THE EL RETAMAL DAM, RIO BRAVO, TAMAULIPAS.

I. BACKGROUND.

On September 1, 2023, the unit-price, fixed-time public works contract No. CILA-JUA-LPN-21-2023 was signed for the work described as the "Rehabilitation and modernization of the lifting systems of the Retamal Dam floodgates." This contract includes several stages:

Stage 1.
Development of the engineering for the implementation of the central gate lifting system, control panel, and hydraulic power unit.

Stage 2.
Executive designs of the lifting systems: servomechanisms, support structures on concrete piles (chassis) and on the metal structure of the gate screen (lug), control panel and hydraulic power unit.

Stage 3.
Manufacturing of lifting systems: servomechanisms, support structures on concrete piles (chassis) and on the metal structure of the gate screen (lug), control panel and hydraulic power unit, including the procurement of power cables, accessories and supply pipes for the hydraulic power system.

Stage 4.
Assembly of lifting systems: servomechanisms, support structures on concrete piles (chassis) and on the metal structure of the gate screen (lug), control panel and hydraulic power unit, including supply pipes, complementary elements such as inclinometers, power wiring, control and accessories.

Stage 5.
Dismantling of the previous systems consisting of rocker arm structures, cables, pulleys, and gearmotors, which will be moved to the side yard of the El Retamal Dam.

Stage 6.
Commissioning of lifting systems: servomechanisms, support structures on concrete piles (chassis) and on the gate structure (lug), control panel and hydraulic power unit, inclinometer programming, power and control systems.

Machine Translated by Google

We are currently in phase 3 of the modernization project, which involves the manufacture of a servo system, which will be driven by a HPU (Hydraulic Power Unit). This is connected to the control panel, which links the power supply with the data system to operate and control the movement of the gates, simultaneously performing the graphic identification to be displayed on the control panel.

During the engineering phase, the servomotors were designed to be capable of lifting the central gate and actuating all its movements without deformations, alterations, or variations. This was evident in the engineering developed, leading to the selection of a robust servomotor system with specific characteristics.

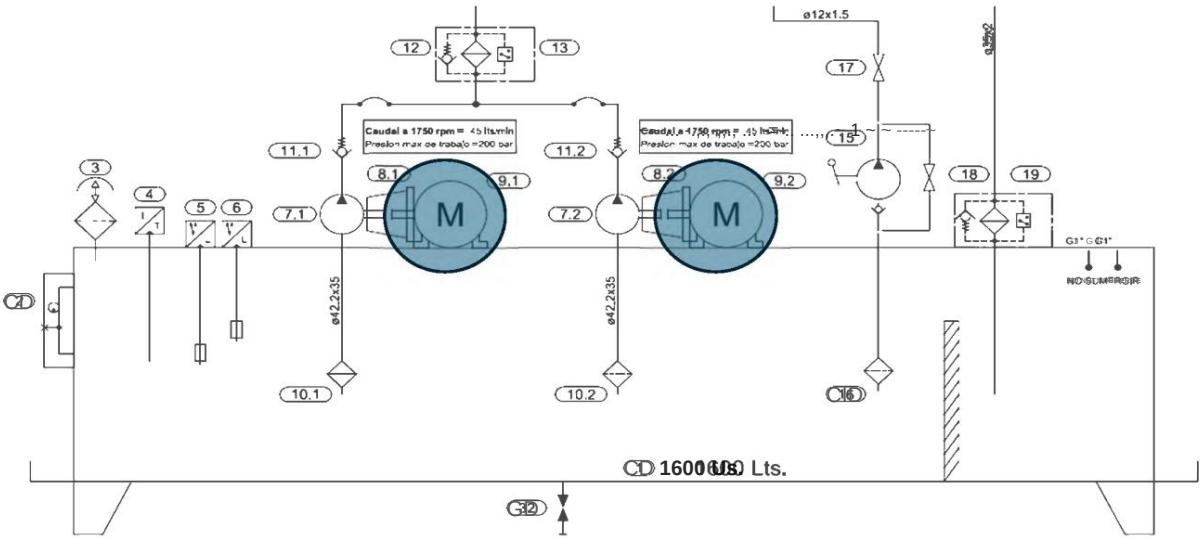

Figure 1. Diagram of the HPU system, showing two electric motors.

II. SCOPE.

The purpose of this document is to explain the scope of the contract for the power supply to the lifting system of the El Retamal Dam, which is currently being modernized.

III. OBJECTIVE.

To clarify and identify urgent modifications to the dam's electrical power system, as well as to demonstrate the current state of the systems, including panels, conductors, grounding systems, and others that clearly require maintenance. Also, to consider modernization efforts, especially to create optimal conditions for the dam's lifting system. Part of the main objective is to identify the procurement of specially manufactured elements, which must be carried out by CILA in both the Mexican and U.S. sections, along with other complementary work.

Machine Translated by Google

IV. DESCRIPTION OF THE EXISTING POWER SUPPLY SYSTEM.

The main power supply considers the following:

1. **Main power lines. Both the Mexican and U.S. sections are composed of 34.50 kV three-phase overhead lines, both with three-phase transformers with a nominal voltage of 220 volts.**

2. **Generators. That is, emergency generators are also configured for a nominal voltage of 220 volts and a maximum capacity of 30 kVA.**

3. **Contracted load. This represents a demand of 25 KW, data provided for the representation of CILA in Reynosa.**

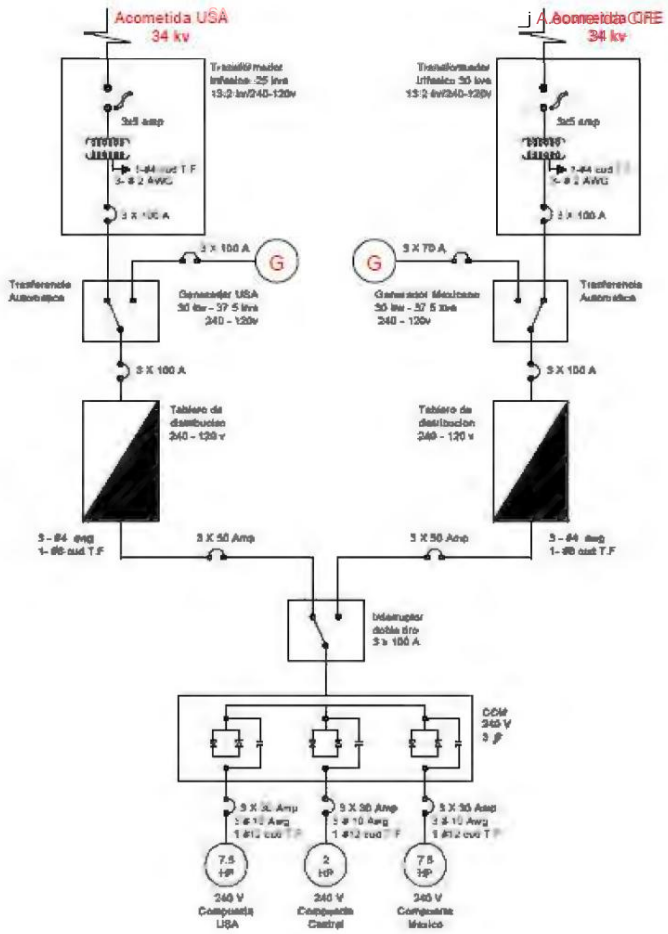

Figure 2. Single-line diagram of existing power supply (October 2024).

This diagram was the result of surveys, reviews, visits, analyses, and inspections carried out at the facilities to determine the composition of the current system, since updated plans are not available.

Machine Translated by Google

Photograph 1. General view of the El Retamal Dam, observe the feeds coming from the ends.

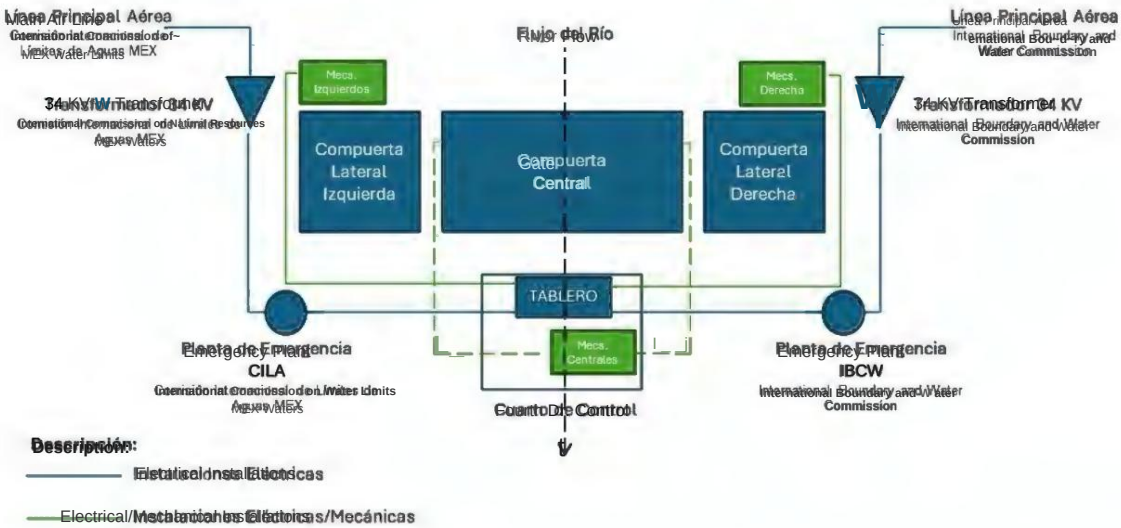

Figure 3. Diagram of the mechanisms and current power supply system of El Retamal Dam

Photograph 2 and 3. Power line and three-phase transformer of the Mexican section.

Machine Translated by Google

The Mexican section's connection is 34.5 kV and the main substation nearby is the SE Parque Industrial Colonial 138 kV. Consulting the short-circuit level in the document "Short Circuit Values of the General Distribution Networks 2026" published annually by the CFE Distribution Directorate, the characteristics of the electrical equipment of the HPU system were verified, having the following value.

Icc = 3.603 kA

Icc = 3.675 kA

Valores de cortocircuito de redes de la RGD, las RSD, correspondiente al año 2026
Gerencia de Distribución Golfo Norte

Número	División	Zona	Acrónimo	Subestación	Banco	Tensión AT (kV)	Tensión MT (kV)	Capacidad en MVA	Corriente de cortocircuito (kA) y relación X/R							
									Nivel de CC máximo 2024				Nivel mínimo de CC máximo 2024			
									3F	X/R	1F	X/R	3F	X/R	1F	X/R
266	Golfo Norte	Reynosa	06-DDR-138	DIAZ ORDAZ	06-DDR-138-1	138	13.8	12.5	4.503	15.175	4.611	16.429	4.520	15.604	4.628	16.772
267	Golfo Norte	Reynosa	06-PIC-138	INDUSTRIAL COLONIAL	06-PIC-138-1	138	34.5	30	2.923	15.909	2.990	17.010	2.946	15.861	3.008	17.746
268	Golfo Norte	Reynosa	06-INO2-138	INDUSTRIAL DEL NORTE 2	06-INO2-138-1	138	13.8	30	7.686	16.432	7.831	17.423	7.730	17.146	7.862	17.965
269	Golfo Norte	Reynosa	06-INO2-138	INDUSTRIAL DEL NORTE 2	06-INO2-138-2	138	13.8	30	7.511	16.498	7.650	17.475	7.563	17.202	7.679	18.007
270	Golfo Norte	Reynosa	06-JRA-138	JARACHINA	06-JRA-138-1	138	13.8	30	7.881	17.060	8.009	17.903	7.928	17.860	8.042	18.495
271	Golfo Norte	Reynosa	06-JRA-138	JARACHINA	06-JRA-138-2	138	13.8	30	7.545	17.162	7.652	17.964	7.588	17.942	7.692	18.554
272	Golfo Norte	Reynosa	06-JUZ-138	JUAREZ	06-JUZ-138-2	138	13.8	30	7.655	17.367	7.767	18.148	7.699	18.156	7.797	18.710
273	Golfo Norte	Reynosa	06-JUZ-138	JUAREZ	06-JUZ-138-1	138	13.8	30	7.178	17.529	7.276	18.254	7.217	18.260	7.302	18.785
274	Golfo Norte	Reynosa	06-MEX-138	MEXICO	06-MEX-138-2	138	13.8	30	14.183	14.831	14.652	16.129	14.348	15.980	14.769	16.989
275	Golfo Norte	Reynosa	06-MEX-138	MEXICO	06-MEX-138-1	138	13.8	30	7.516	16.875	7.646	17.763	7.562	17.600	7.677	18.303
276	Golfo Norte	Reynosa	06-NRE-138	NORTE	06-NRE-138-1	138	13.8	30	7.328	15.559	7.506	16.733	7.346	16.158	7.532	17.205
277	Golfo Norte	Reynosa	06-NVP-138	NUEVO PROGRESO	06-NVP-138-1	138	13.8	30	8.503	14.452	8.766	15.820	8.596	15.426	8.834	16.619
278	Golfo Norte	Reynosa	06-ORZ-138	ORIZATLAN	06-ORZ-138-1	138	34.5	30	2.990	16.342	3.053	17.350	3.013	17.245	3.069	18.037
279	Golfo Norte	Reynosa	06-PAI-138	PARQUE INDUSTRIAL REY	06-PAI-138-1	138	34.5	30	3.571	16.196	3.653	17.234	3.603	17.207	3.675	18.008
280	Golfo Norte	Reynosa	06-PAI-138	PARQUE INDUSTRIAL REY	06-PAI-138-2	138	34.5	30	3.458	16.294	3.534	17.311	3.486	17.284	3.555	18.064

Figure 3. Preliminary Short Circuit Values provided by the CFE Below, some elements will be shown in their current state.

Photographs 4, 5 and 6. Main power supply boards and records (Mexican section).

Machine Translated by Google

Photograph 7 and 8. Main power supply (US section).

Photographs 9 and 10. Emergency plants, backup unit (US section).

The facilities at the American section are in slightly better condition; however, both have wire as their main conductor, which is due for replacement, and the cabinets and auxiliary systems show advanced oxidation. Insects and harmful fauna have affected much of the wire insulation, causing weakening, which could lead to a power failure.

Machine Translated by Google

V. SCOPE CONSIDERED IN THE MODERNIZATION STAGE.

The contract that DUSGEM is developing for the modernization of lifting systems includes the following for the electrical part:

1. **Manufacture and installation of a power and control panel (control unit for movement of the side gates and central gate) including the cabinet, push-button system for control and actuation of the mechanisms, accessories, computer, control panel and interface.**

2. **Power supply from the control room to the HPU mechanisms for the central gate (everything within the control room, including wiring, routing, connection and programming from the original power supply of the previous system to the new control panel).**

3. **Power, including supply of signal cables from the control room to the existing mechanisms located at the rear upstream of the side gates. This includes new conduits, accessories and connections of the existing mechanism system with the new control system.**

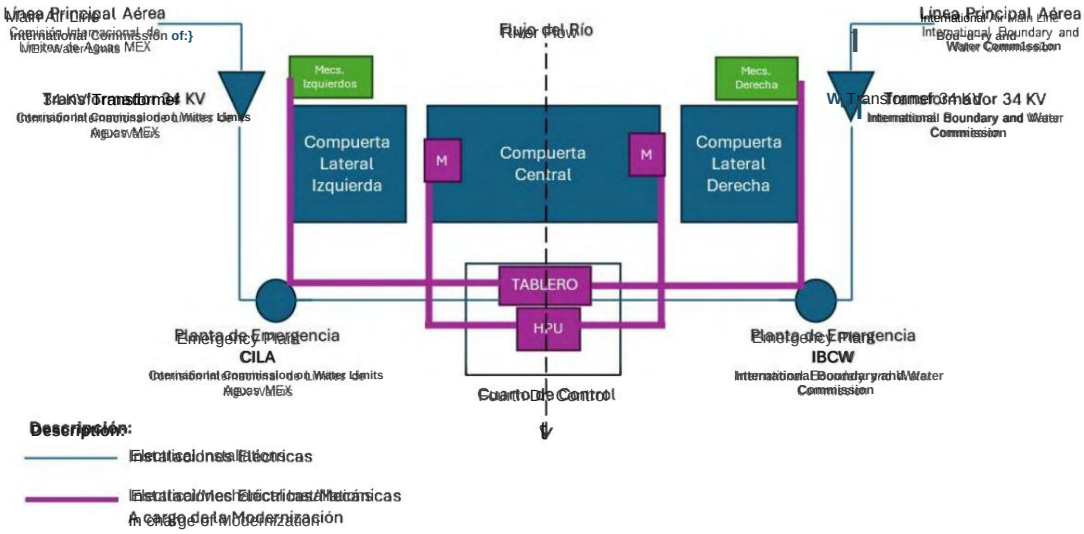

Figure 4. Diagram of the mechanisms and power supply system in charge of the El Retamal Dam Modernization project.

As mentioned, the original scope was to connect the new system (board) to the existing lateral mechanisms and to the HPU for the central gate system; however, the feed line capacity was revised and requires additional adjustments, which will be mentioned later.

Machine Translated by Google

VI. TECHNICAL REQUIREMENTS OF THE NEW LIFTING SYSTEM.

The servomechanisms and the HPU (Hydraulic Power Unit) include two electric motors within their components, as shown in diagram number 1, both are used to move the gate and these operate independently, that is, one will be a backup for the other, its drive will also be independent, both mobilize the hydraulic system, these according to the calculations resulted in 25 HP of power each, the HPU component table is attached.

Pos.	Qty.	Type	Description	Manufacturer
	1	Shaper Separators		
1	1	GCL001360	Tank and components	GLUAL
2	1	LVA30TVPM12S01	Level gauge	Mpfiltri
3	1	CFI000010	Breather desiccant	GLUAL
4	1	CMC000011 _ PT-100(4...20mA) L=600mm	Temperature Sensor	GLUAL
5	1	PVC-1-L=600 mm	Level switch	Garma
6	1	PVC-1-L=500 mm	Level switch	Garma
7	2	PGP511A0270CS2D3NL2L2B1B1	Gear Pump	Parker
8	2	AKA13FS200Z4S	Support coupling	Mpfiltri
9	2	25CV 1750rpm 60Hz 460V B3/B5-C	Electric motor	Comercial
10	2	STR1003SG1M90P01	Suction filter	Mpfiltri
11	2	RHD-20S	Check Valve	Voss
12	1	FMP1352BAG2A25NP01	Pressure Filter	Mpfiltri
13	1	DLES01HA50P01	Electrical Indicator	Mpfiltri
14	1	RHD-25S	Check Valve	Voss
15	1	PM25S00+LPM270	Hand pump	Oleodeamida Regglana
16	1	STR0501SG1M90P01	Suction filter	Mpfiltri
17	1	BKH-ON06-G1/4-112A	2 Way Ball Valve	PISTER
18	1	MPF1811AG1A25HBP01	Return filter	MPfiltri
19	1	BEA20HA50P01	Electrical Indicator	Mpfiltri
20	1	GPL003782	Manifold	GLUAL
21	1	RPEC-LWN	Pressure Relief Valve	Sun
22	1	KQ-024	Throttle Check Valve	Atos
23	2	D3W020BNJW	4/2 Directional Control Valve	Parker
24	1	FT2676-12	Check Valve	Tognella
25	1	EM42V	2/2 Poppet Valve Normally Closed	Hawe
26	1	FT2672-34	Throttle valve	Tognella
27	2	FT-290-1/4"	Gauge Isolator	Tognella
28	2	63-MM-EV-250	Pressure gauge	Wika
29	1	SBR10TCM000330CNZ0	Accumulator security block	PARKER
30	1	ABVE 50 (066890)	Accumulator	Leduc
31	1	PT250R-2004-I2-DA01	Pressure Transducer	Hans Turck
32	1	CIM-16-1	2 Way Ball Valve	CIMBERIO
33	1	EM22V-G24 7749 0024-00,HW	2/2 Poppet Valve Normally Closed	Hawe
34	1	RHD-20S	Check Valve	Voss

Figure 6. List of components that make up the HPU in charge of the El Retamal Dam Modernization project.

Machine Translated by Google

VII. DESCRIPTION OF THE PROPOSED ARRANGEMENT.

The installation of the mechanical components, namely the servomotors, HPU hydraulic power unit and the control panel, will begin in approximately 5 weeks. Therefore, the following action plan has been developed, which considers the following, for the part not covered within the modernization contract:

1. **Supply and install 3x5 AMP fuses as primary protection on the transformer bases for both sections.**

2. **Supply and install 75 KVA (34,500 / 480-277 VAC) three-phase Delta Star type transformers for both sections.**
3. **Supply and install two 3x100 AMP safety switches for both sections after the transformer connection point.**
4. **Supply and install 3-wire feeds of 1/0 AWG cable, 1 wire of 1/0 AWG cable and 1 wire in # 4 bare copper cable channeled with 2" diameter conduit pipe for both sections, from transformers to double-throw transfer, for both sections, as well as a 3x150 AMP protected switch. At this point, changes must be made to the generator equipment to operate at 480 volts and provide major service to the plants.**

5. **Supply and install after double throw transfer safety switch 3x150 AMP for both sections.**

6. **Supply and install feeds of 3 wires of # 2 AWG cable, 1 wire of # 2 AWG cable and 1 wire in bare copper cable of # 6 channeled with 2” diameter Conduit pipe for both sections, from the double-throw transfer to a 30-pole NF30 distribution board, for both sections, these boards are also recorded as new elements (approximately 85 linear meters of feed).**

7. **After the distribution board, the supply and installation of a feed (approximately 15 linear meters) is considered, consisting of 3 wires of # 6 AWG cable, 1 wire of # 6 AWG cable and 1 wire of bare copper cable of # 8 channeled through 1-1/2” diameter Conduit pipe, for both sections.**

8. **Supply and install 30 KVA (34,500/480-) three-phase dry-type transformers 220-127 VAC) for both power supplies. (These will be rated at a nominal voltage of 220 volts, in accordance with the rest of the installations, including lighting, outlets, and air conditioning.)**

9. **After the dry transformers, the supply and installation of a feed (approximately 10 linear meters) of 3 # 4 AWG cable wires, 1 # 4 AWG cable wire and 1 # 6 bare copper cable wire channeled with 1-1/2” diameter Conduit pipe is considered for both sections.**

10. **After the distribution board (point 7), the supply and installation of power (85 linear meters) is considered, consisting of 3 wires of #2 AWG cable, 1 wire of #2 AWG cable and 1 wire of bare copper cable of #6 channeled through 1-1/2” diameter Conduit pipe, for both sections.**

Machine Translated by Google

The diagram developed with the basic information of the feeding proposal is attached below:

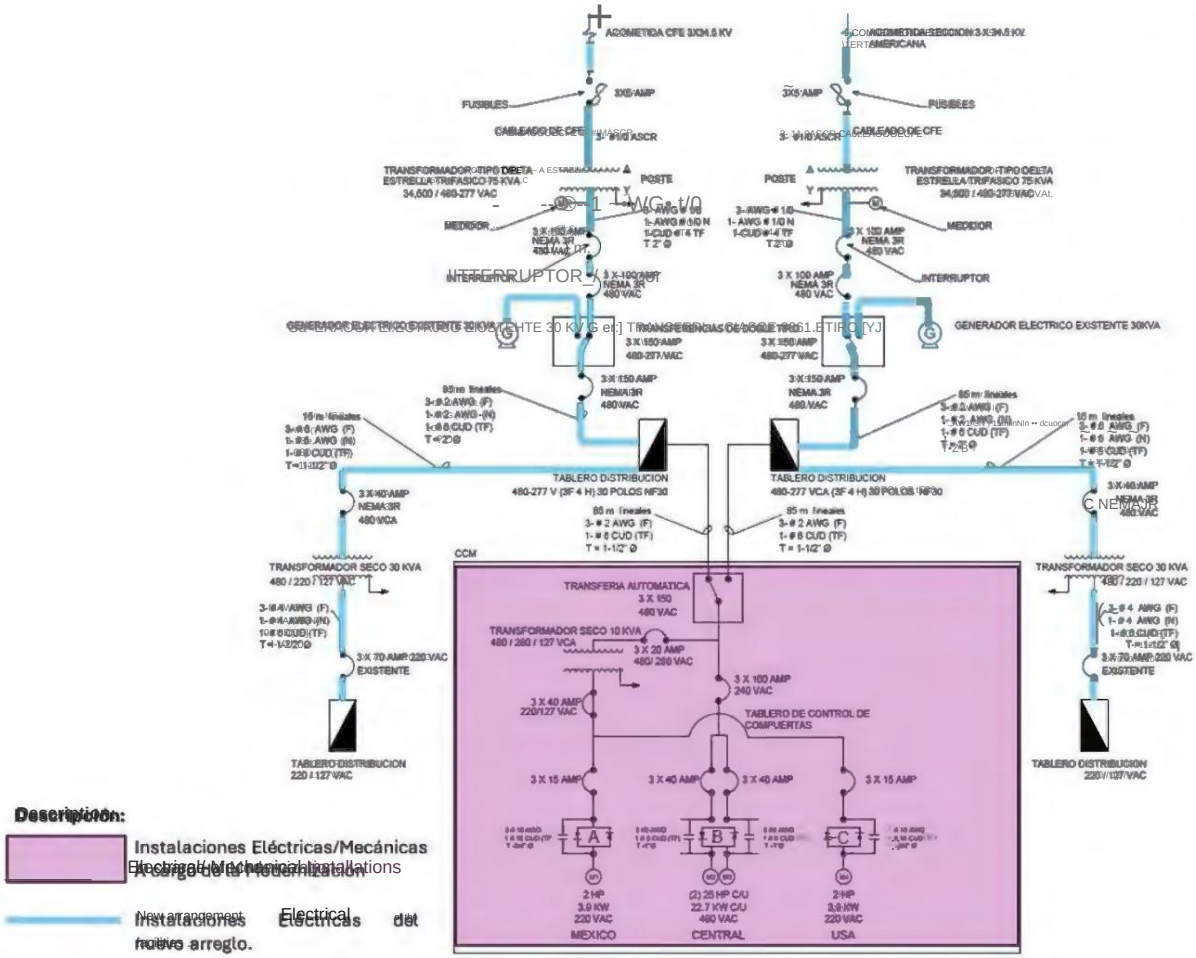

Figure 7. Single-line diagram of the El Retamal Dam Modernization project.

As indicated in section V, the scope of the contract may be adjusted to the new arrangement, identified within the purple polygon. For the remaining items, if necessary, written authorization is required. It is understood that modifications must be reconciled as unforeseen and additional items. We note that these are being quantified and valued. The technical and financial proposal for these items will be sent via email.

Additionally, the steps to be taken to replace the transformers are actions that must be promoted by the Mexican and American branches and are dependent on different agencies and authorities.

Machine Translated by Google

I inform you that the company is fully prepared to jointly carry out the necessary actions to successfully complete the modernization contract. Resources will be allocated to address these additional works, pending approval.

Procurement and additional installation work is estimated to take 6 to 8 weeks, depending on supplies.

VIII. CONCLUSIONS AND RECOMMENDATIONS.

- **Different alternatives have been analyzed and explored for the use of the optimal nominal voltage, including the normal voltage of 220 volts currently used, both in the main feeds and in the emergency, transfer and supplementary plants. However, using this nominal voltage would generate greater energy consumption after the inclusion of the HPU (Hydraulic Power Unit) electric motors.**

- **The most prudent alternative is to integrate the three-phase power system with a nominal voltage of 480 volts without having to adapt the main lines, i.e., the overhead lines, significantly optimizing electrical consumption and even regulating variations in the main system within the El Retamal Dam.**

- **While some of the feeds are currently undergoing modernization, we consider it appropriate to additionally modernize the main transformers, switchboards, transfers, conduits, and existing conductors, since we are in this process and the condition of some elements can be classified as operational with their integrity in reserve.**

- **In the case of generators, they have been inspected and, according to the manufacturer's data, can be migrated from 220 volts to 480 volts of nominal power, making minimal adjustments, generating the necessary compatibility with the new electrical panel, taking advantage of these elements.**