ALL SHEETS ARE THE SAME REVISION STATUS

REVISION HISTORY			
REV	DESCRIPTION	DATE	APPROVED
0.11	INITIAL RELEASE	3/13/2025	B.BINGHAM

PRELIMINARY
7/24/2025

NOTES:

FINISH: EXCEPT LATCH BODIES, GASKETS, & WHERE SPECIFIED.

A. CHEM FILM PER MIL-DTL-5541, TYPE 1, CLASS 3

B. PRIME EXTERIOR ONLY WITH EPOXY PRIME PER MIL-DTL-0053022, TYPE II EXCEPT ON NOTED AREAS.

C. PAINT EXTERIOR ONLY WITH WHITE POLYURETHANE COATING PER MIL-PRF-85285, TYPE II, CLASS H COLOR # 17925 OF FED-STD-595.

1. IDENTIFY PART IN ACCORDANCE WITH MIL-STD-130. BAG AND TAG ALL ITEMS TOO SMALL TO IDENTIFY.
2. VENDORS LISTED ON THIS DRAWING FOR COMMERCIAL ITEMS ARE A SUGGESTED SOURCE OF SUPPLY ONLY. OTHER VENDORS ARE ACCEPTABLE AS LONG AS THEIR ITEM'S QUALITY MATCHES THOSE OF THE SUGGESTED SOURCE OF SUPPLY LISTED HEREON IN SPECIFICATION, FORM, FIT, AND FUNCTION.
3. IDENTIFICATION OF THE SUGGESTED SOURCE(S) OF SUPPLY HEREON IS NOT TO BE CONSTRUED AS A GUARANTEE OF PRESENT OR CONTINUED AVAILABILITY AS A SOURCE OF SUPPLY FOR THE ITEM(S).
4. WELD ALL JOINTS AND GAPS, GRIND ALL OUTSIDE WELD FLUSH AND SMOOTH. STANDOFFS & STUDS INCLUDED.
5. SEALED CASE CONSTRUCTION, PRESSURE TEST PER MIL-STD-108, TABLE III + NOTE 1, WITH THE OPTIONS THAT PRESSURE CAN BE APPLIED FROM THE INSIDE AND THE TIME INTERVAL CAN BE REDUCED TO A 3 MINUTE MINIMUM. TEST (GASKET & PLUG IN FRONT DOOR OPENING, REAR CUTOUTS AND PANEL OPENING).
6. MASK FROM PRIMER AND PAINT.
7. ALL FABRICATION TO CONFORM TO MIL-HDBK-454 & MIL-STD-108. WELDS CONFORM TO AWS D17.1 (FORMALLY MIL-STD-2219).
8. AFTER FABRICATION, PARTS AND ASSEMBLED EQUIPMENT SHALL BE CLEANED OF SMUDGES; LOOSE, SPATTERED, OR EXCESS SOLDER; WELD METAL; METAL CHIPS AND MOLD RELEASE AGENTS; OR ANY OTHER FOREIGN MATERIAL WHICH MIGHT DETRACT FROM THE INTENDED OPERATION, FUNCTION, OR APPEARANCE OF THE EQUIPMENT.
9. FILL ENGRAVED MARKINGS J1 - J8 USING BLACK POLYURETHANE IAW MIL-PRF-85285, TYPE II, CLASS H, COLOR # 17038 OF FED-STD-595. ENGRAVINGS ARE TO BE ALL CAPS, .250 SIZE LETTERING, IN SINGLE STROKE GOTHIC OR ARIAL FONT. CENTER IN RELATION TO CORRESPONDING CUTOUTS +/- .030.
10. ATTACH TO ENCLOSURE USING EMI ADHESIVE (FIND NO. 18)
11. INSTALL IAW MANUFACTURE'S SPECIFICATIONS AND RECOMMENDED PRACTICES.
12. APPLY THREAD LOCKING SEALANT TO THREADS (FIND NO. 19). INSTALL PRIOR TO WELDING.
13. FOR DIMENSIONS NOT SHOWN REFER TO CAD DATA.
14. CAD DATA IS BASIC UNLESS OTHERWISE SPECIFIED ⌓ 0.030.

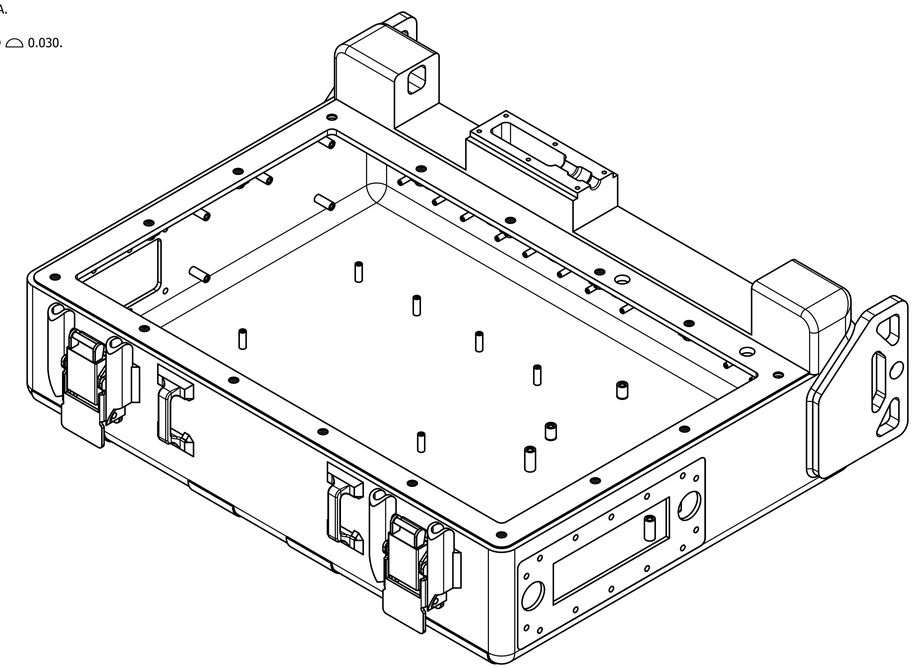

FIND NO.	QTY	CAGEC	PART NUMBER	DESCRIPTION	MATERIAL/SPECIFICATION	NOTE
19	AR	60647	LOCTITE 220	BLUE THREAD LOCKING SEALANT	MIL-S-46163A	12
18	AR	41CY0	SS-24	RTV EMI ADHESIVE	NI-GRAPHITE CONDUCTIVE RTV SILICONE	10
17	AR	02KU5	235-010	DURABAK-18 TEXTURED PROTECTIVE LINER - BLACK	POLYURETHANE WITH RUBBER GRANULES	11
16	16	50EB1	LKS-032-2MD	10-32 PEM SELF LOCKING NUTPLATE - HEX	300 SER SST/ NASM25027	11
15	6	3A054	91735A104	4-40 X .375 PHILLIPS PAN HEAD SCREW	316 SST/ ANSI B18.6.3 - No. 4 - 40 - 3/8	12
14	4	50EB1	BSOS-632-18	THREADED STANDOFF PEM 6-32 .562 LG	300 SER SST/6-32 UNC FEMALE MIL-S-1222	11
13	13	50EB1	BSOS-632-12	THREADED STANDOFF PEM 6-32 .375 LG	300 SER SST/6-32 UNC FEMALE MIL-S-1222	11
12	5	50EB1	BSOS-440-16	THREADED STANDOFF PEM 4-40 .500 LG	300 SER SST/4-40 UNC FEMALE MIL-S-1222	11
11	10	50EB1	FHS-632-8	THREADED STUD PEM 6-32 0.500 LG	300 SER SST/ 6-32 UNC MALE MIL-S-1222	11
10	24	50EB1	FHS-440-6	THREADED STUD PEM 4-40 0.375 LG	300 SER SST/4-40 UNC MALE MIL-S-1222	11
9	2	98376	ZSP2-229-1	LATCH BASE	LATCH HOOK USED IN LID ASSEMBLY	
8	1	98752	201754322-21	KEYBOARD PLATE GASKET	.032 STK SERIES 807 SILVER IN SILICONE (0112)	10
7	2	98752	201754322-15	STRAP BLOCK	AL 6061-T6	
6	2	98752	201754322-13	PROTECTIVE CORNER PLATES	AL 6061-T6	
5	1	98752	201754322-12	RIGHT HINGE BLOCK INSERT	AL 6061-T6	
4	1	98752	201754322-11	LEFT HINGE BLOCK INSERT	AL 6061-T6	
3	1	98752	201754322-45	CENTER HINGE BLOCK INSERT, CONSOLIDATED STACK	AL 6061-T6	
2	1	98752	201754322-03	MOUNTING PLATE WITH INSERT SLOTS	AL 6061-T6	
1	1	98752	201754322-41	DRAWN ENCLOSURE BASE CAN, CONSOLIDATED STACK	.090 STK, AL 6061-T6	
	X	98752	201754322-40	ENCLOSURE WELD ASSEMBLY, CONSOLIDATED STACK		

PARTS LIST

DISTRIBUTION STATEMENT D

DISTRIBUTION AUTHORIZED TO DOD AND U.S. DOD CONTRACTORS ONLY FOR ADMINISTRATIVE OR OPERATIONAL USE. DATE OF DETERMINATION IS 7/24/2025. OTHER REQUESTS FOR THIS DOCUMENT SHALL BE REFERRED TO THE ATS PROGRAM OFFICE AFLCMC/WNA-ATS ROBINS A.F.B GA. 31098.
QUESTIONS CONCERNING TECHNICAL CONTENT SHALL BE REFERRED TO 309 SWEG/516 SWES/MXDPAF HILL A.F.B. UT. 84056

DESTRUCTION NOTICE

DESTROY BY ANY METHOD THAT WILL PREVENT DISCLOSURE OF CONTENTS OR RECONSTRUCTION OF THE DOCUMENTS.

WARNING

EXPORT CONTROLLED. THIS DOCUMENT CONTAINS TECHNICAL DATA WHOSE EXPORT IS RESTRICTED BY THE ARMS EXPORT CONTROL ACT (TITLE 22, U.S.C.2751 ET SEQ.) OR THE EXPORT ADMINISTRATION ACT OF 1979, AS AMENDED, TITLE 50, U.S.C.,APP. 2401 ET SEQ. VIOLATION OF THESE EXPORT-CONTROL LAWS IS SUBJECT TO SEVERE CRIMINAL PENALTIES. DISSEMINATION OF THIS DOCUMENT IS CONTROLLED UNDER DoD DIRECTIVE 5230.25.

NEXT ASSY	USED ON
201754322-30	2020109112-10

APPLICATION

COMPUTER DRAWING
CAD PROG: INVENTOR 2020 VER: FILE NAME: 201754322-40.idw

UNLESS OTHERWISE INDICATED:
-DRAWING WAS PREPARED IN ACCORDANCE WITH ASME 14.100, APPX. B THRU. E
-INTERPRET DRAWINGS IN ACCORDANCE WITH ASME Y14.5-2009
-REMOVE BURRS AND BREAK SHARP EDGES

DESIGNED FOR:
ATS PROGRAM OFFICE

UNLESS OTHERWISE SPECIFIED
DIMENSIONS ARE IN INCHES-TOLERANCES ON:
FRACTIONS ± 1/32 DECIMALS .X ± .100 .XX ± .030 .XXX ± .010 ANGLES ± 2°

THIRD ANGLE PROJECTION

DRAFTER	516 MXDPAF J.GILLMOR	DATE 7/24/2025
CHECKER	516 MXDPAF T.PRICE	7/24/2025
PROJECT ENGINEER	516 MXDPAF T.PRICE	7/24/2025
ENGINEERING APPROVAL	516 MXDPAF B.BINGHAM	7/24/2025
A.F. AUTHENTICATION	AFLCMC/WNAEA E.MULLINAX	
RELEASE	AFLCMC/WNAE K.SIMPSON	

U.S. AIR FORCE

TITLE
ENCLOSURE WELDMENT, CONSOLIDATED STACK

SIZE	CAGE CODE	DWG NO.	REV
D	98752	201754322-40	0.11

SCALE 2/3 WEIGHT 4.60 LBS SHEET 1 OF 13

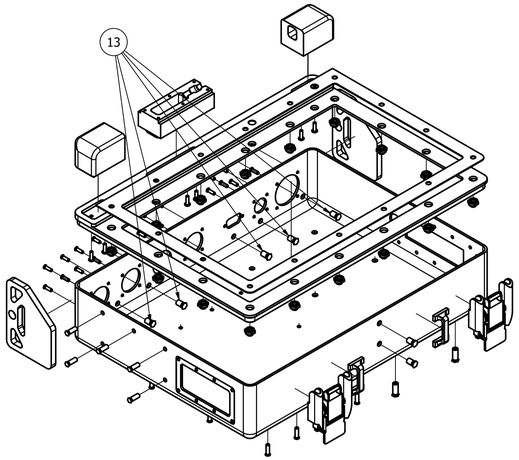

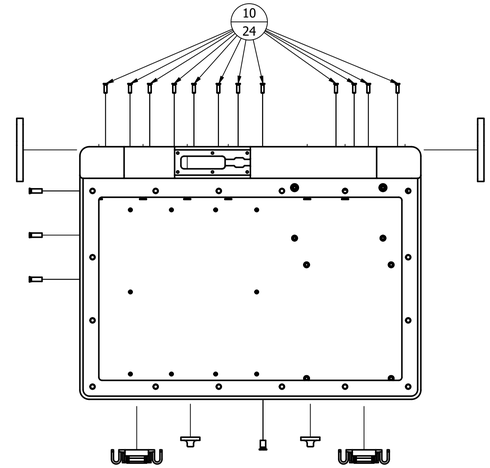

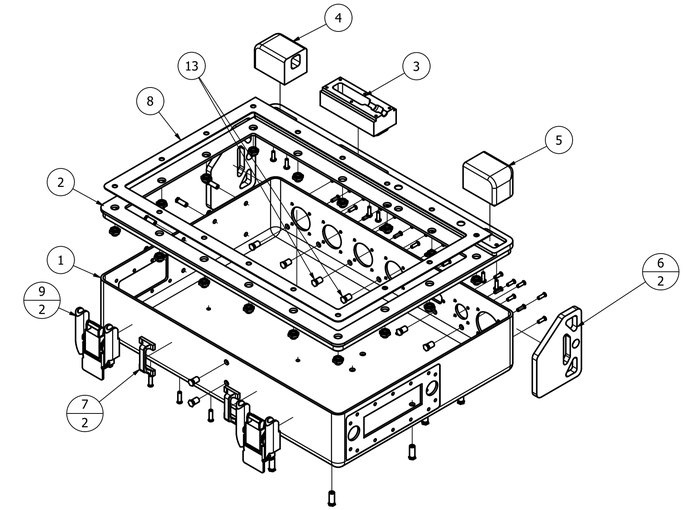

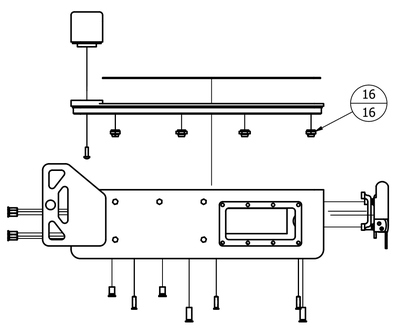

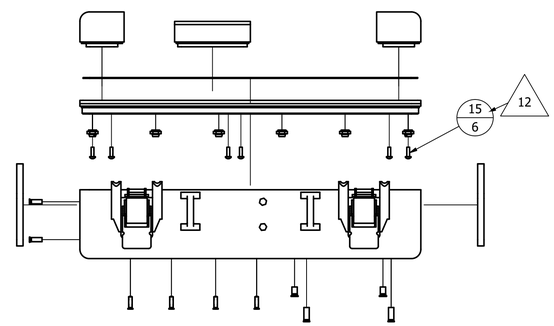

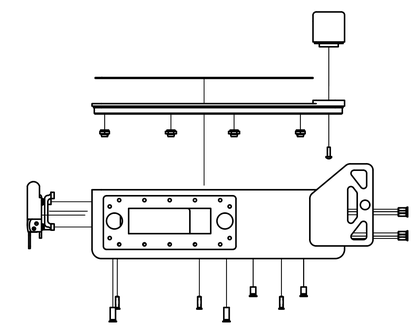

-20 PART ALIGNMENT REFERENCE
SCALE 1 / 3

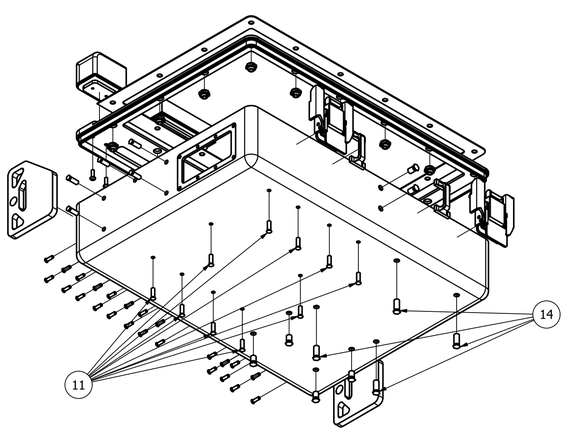

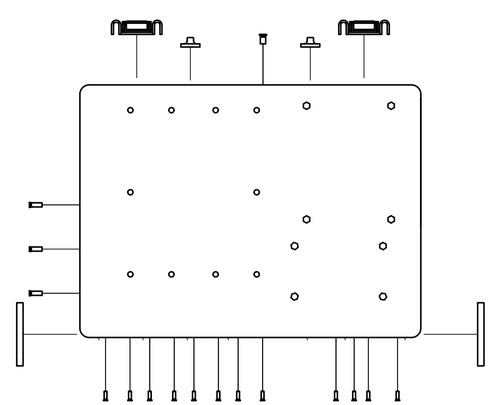

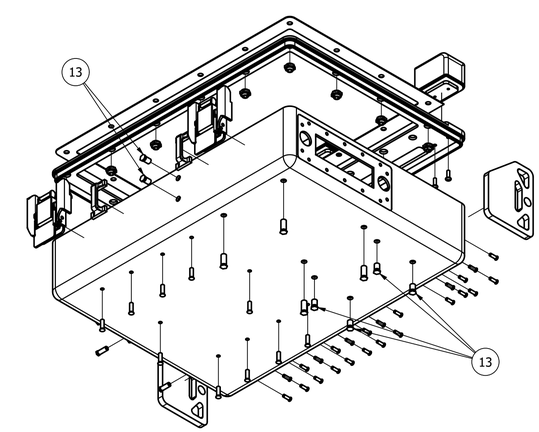

DRAWN:	SIZE	CAGE CODE	DWG NO	REV
J.GILLMOR	D	98752	201754322-40	0.11
CHECKED: T.PRICE	SCALE 1/3		SHEET 2 OF 13	

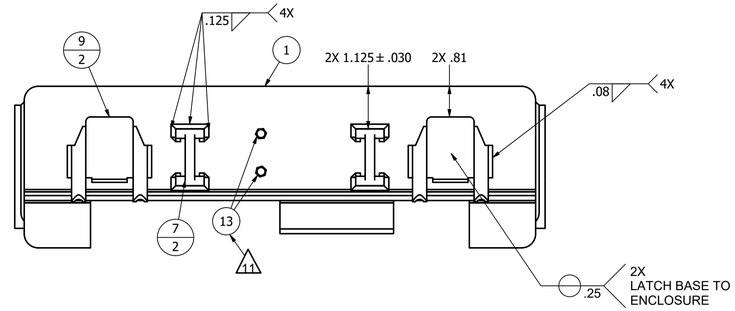

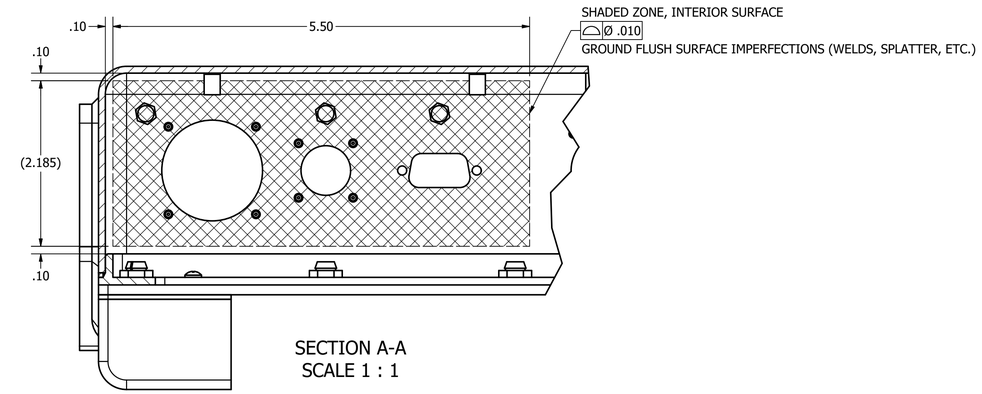

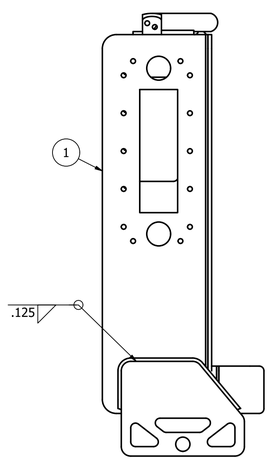

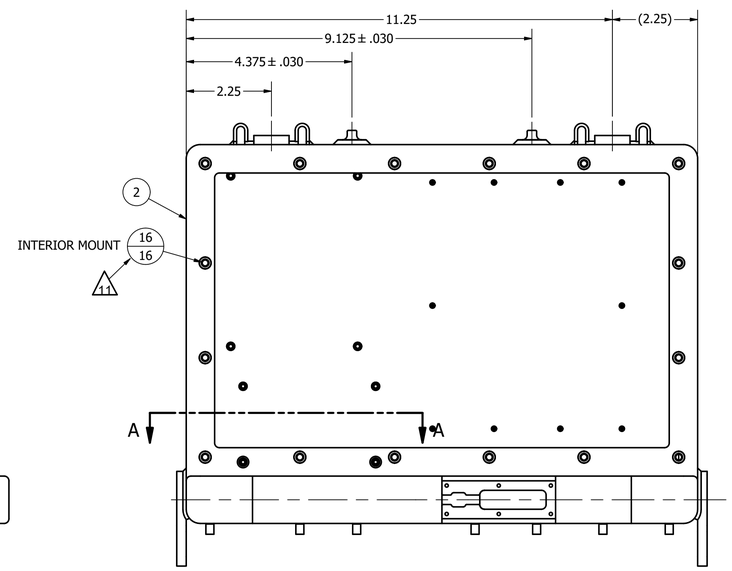

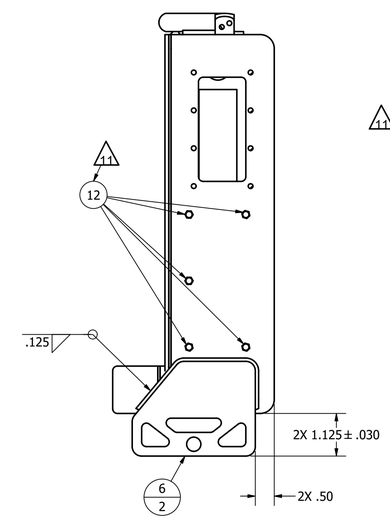

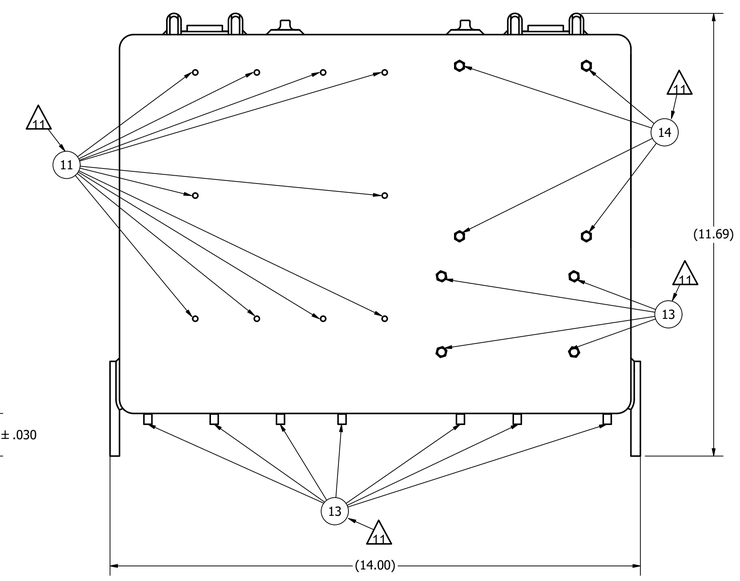

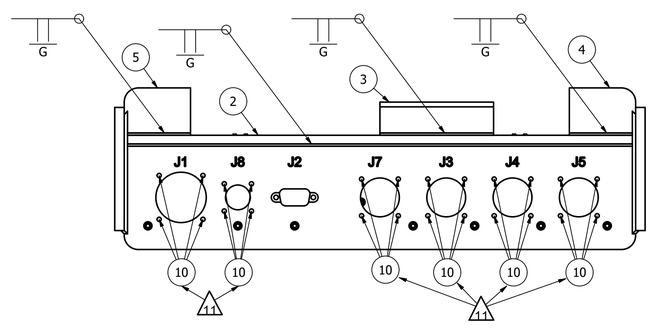

-40 WELD INSTRUCTIONS

(GROUND SMOOTH WELD LINES NOT TO BE VISIBLE AFTER FINISH) 4

DRAWN: J.GILLMOR	SIZE D	CAGE CODE 98752	DWG NO 201754322-40	REV 0.11
CHECKED: T.PRICE	SCALE 1/2		SHEET 3 OF 13	

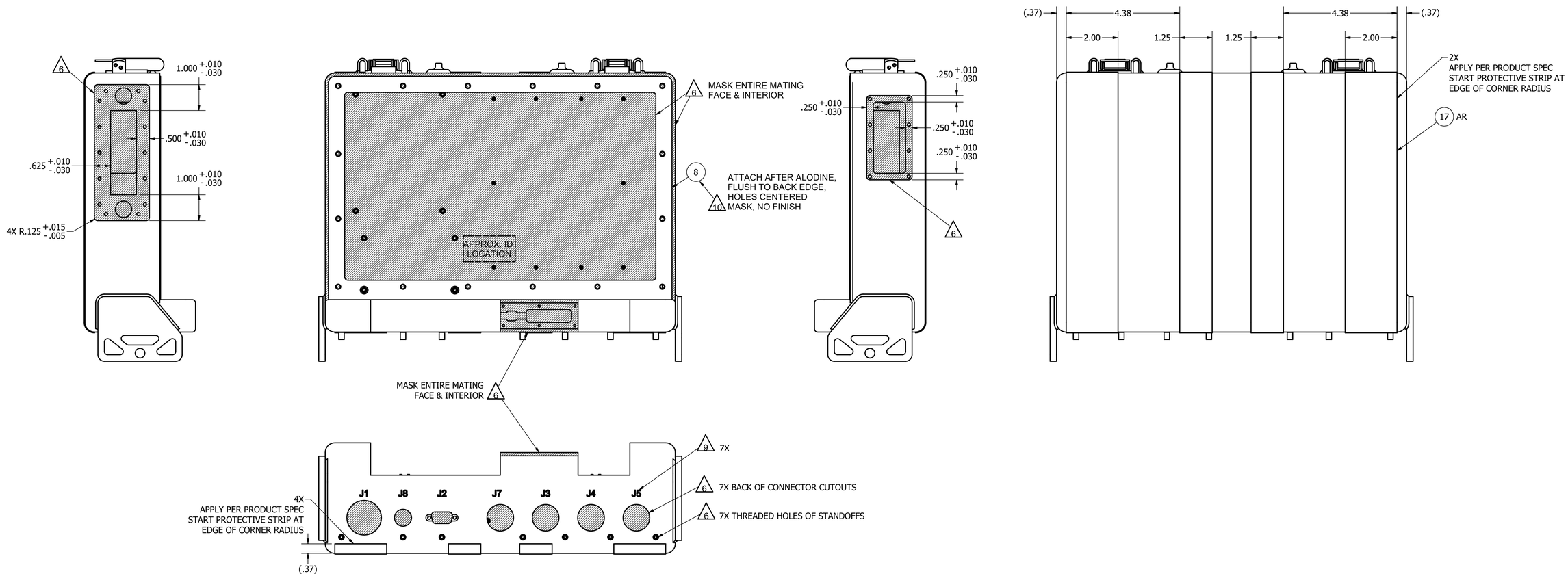

-40 FINISH INSTRUCTIONS

(GROUND SMOOTH WELD LINES NOT TO BE VISIBLE AFTER FINISH)

DRAWN: J.GILLMOR	SIZE D	CAGE CODE 98752	DWG NO 201754322-40	REV 0.11
CHECKED: T.PRICE	SCALE 1/2		SHEET 4 OF 13	

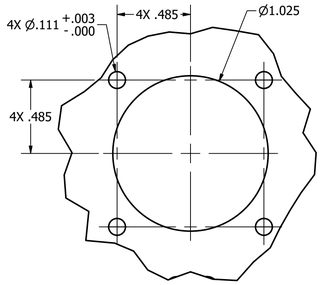

4X DETAIL B
(J3, J4, J5, J7)
SCALE 2 : 1

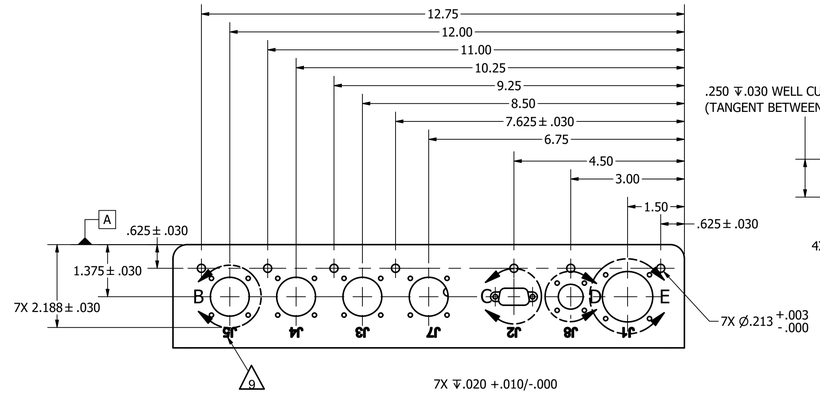

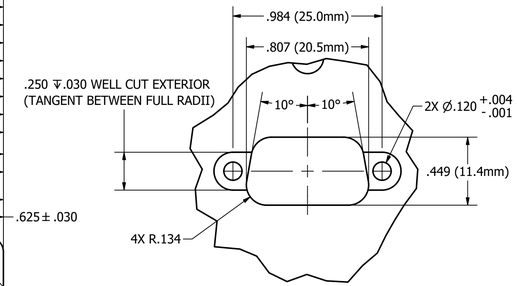

DETAIL C
(J2)
SCALE 2 : 1

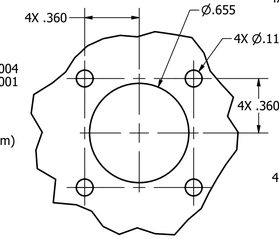

DETAIL D
(J8)
SCALE 2 : 1

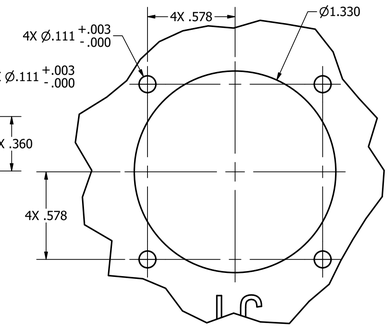

DETAIL E
(J1)
SCALE 2 : 1

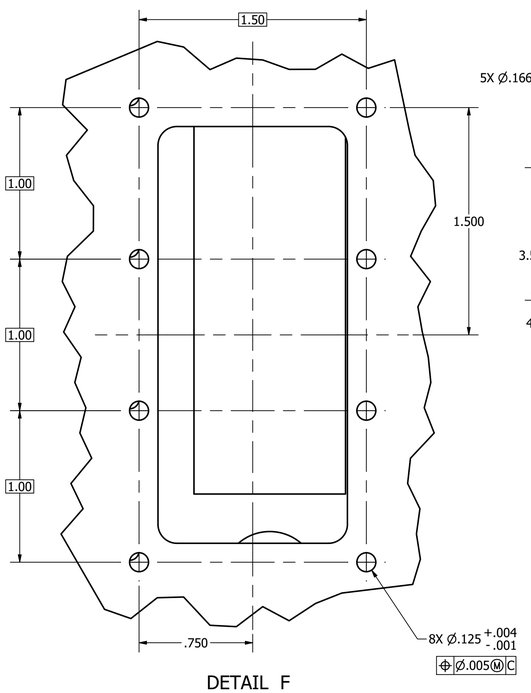

DETAIL F
SCALE 2 : 1

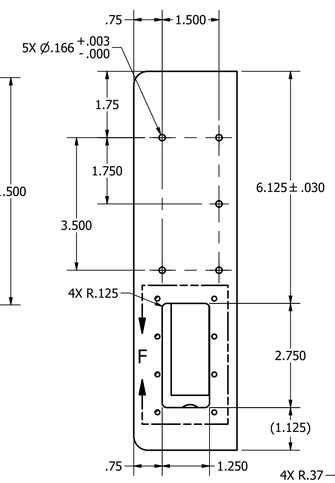

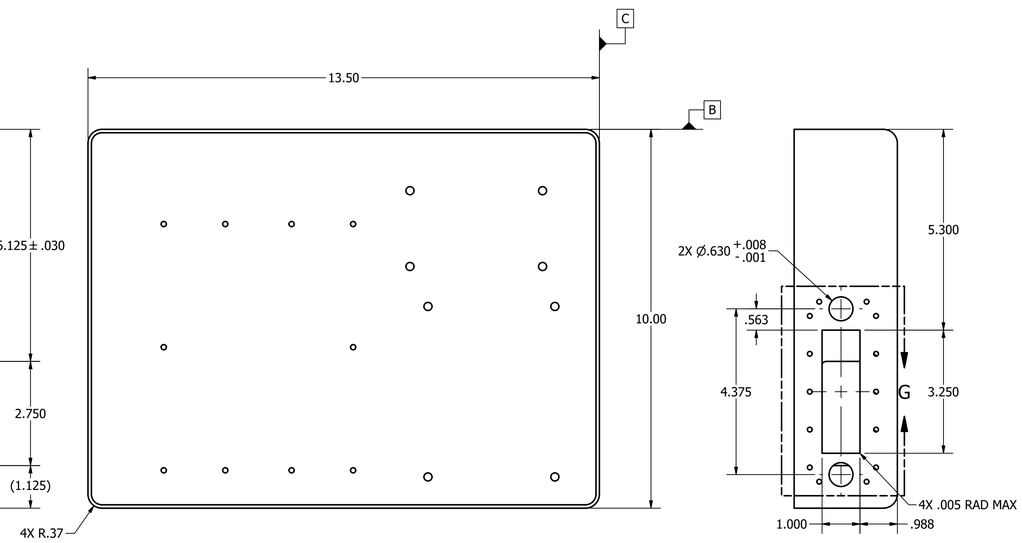

-41 ENCLOSURE BASE CAN

SIDEWALL FEATURE DETAILS
(BASE FEATURES SEE SHT 6)

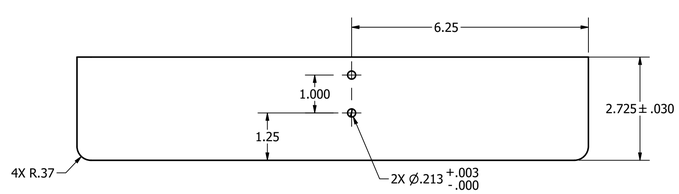

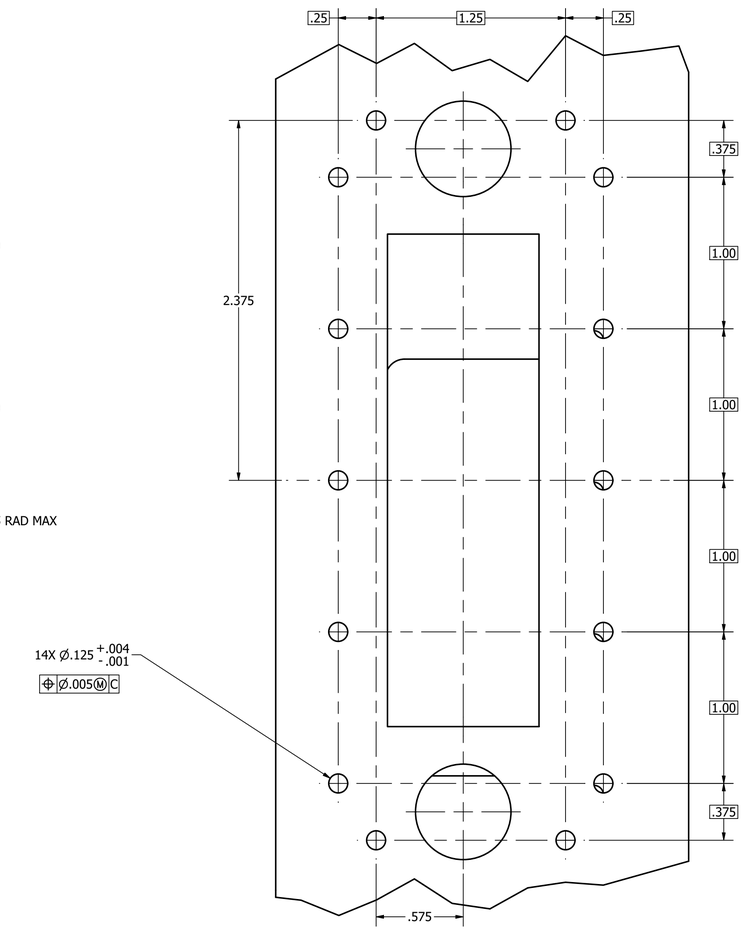

DETAIL G
SCALE 2 : 1

DRAWN: J.GILLMOR	SIZE D	CAGE CODE 98752	DWG NO 201754322-40	REV 0.11
CHECKED: T.PRICE	SCALE 1/2		SHEET 5 OF 13	

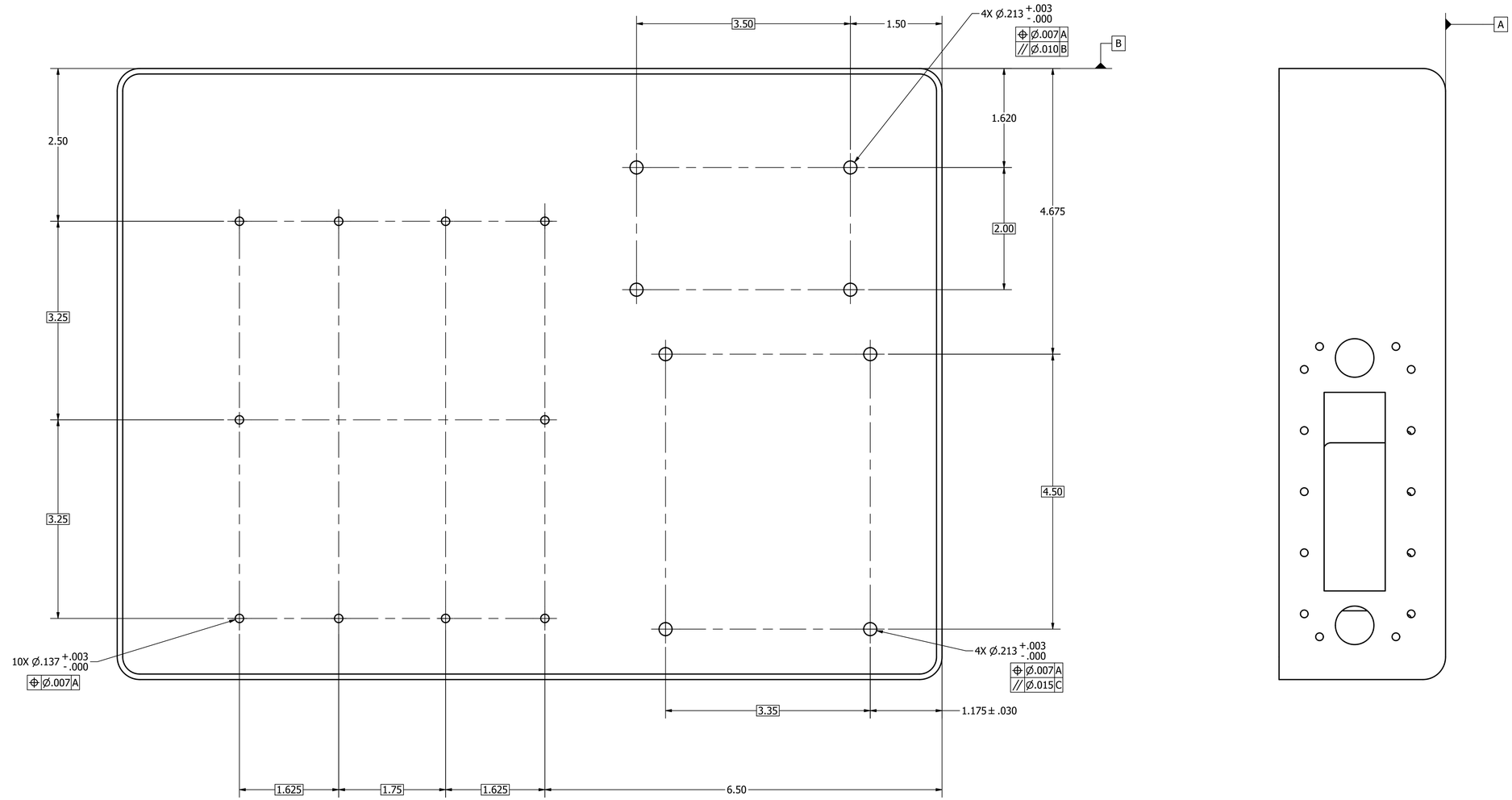

-41 ENCLOSURE BASE CAN

BASE FEATURE DETAILS

DRAWN: J.GILLMOR	SIZE D	CAGE CODE 98752	DWG NO 201754322-40	REV 0.11
CHECKED: T.PRICE	SCALE 1:1		SHEET 6 OF 13	

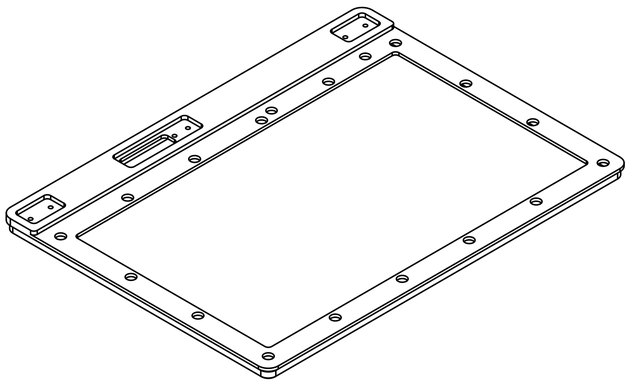

TOP ISOMETRIC

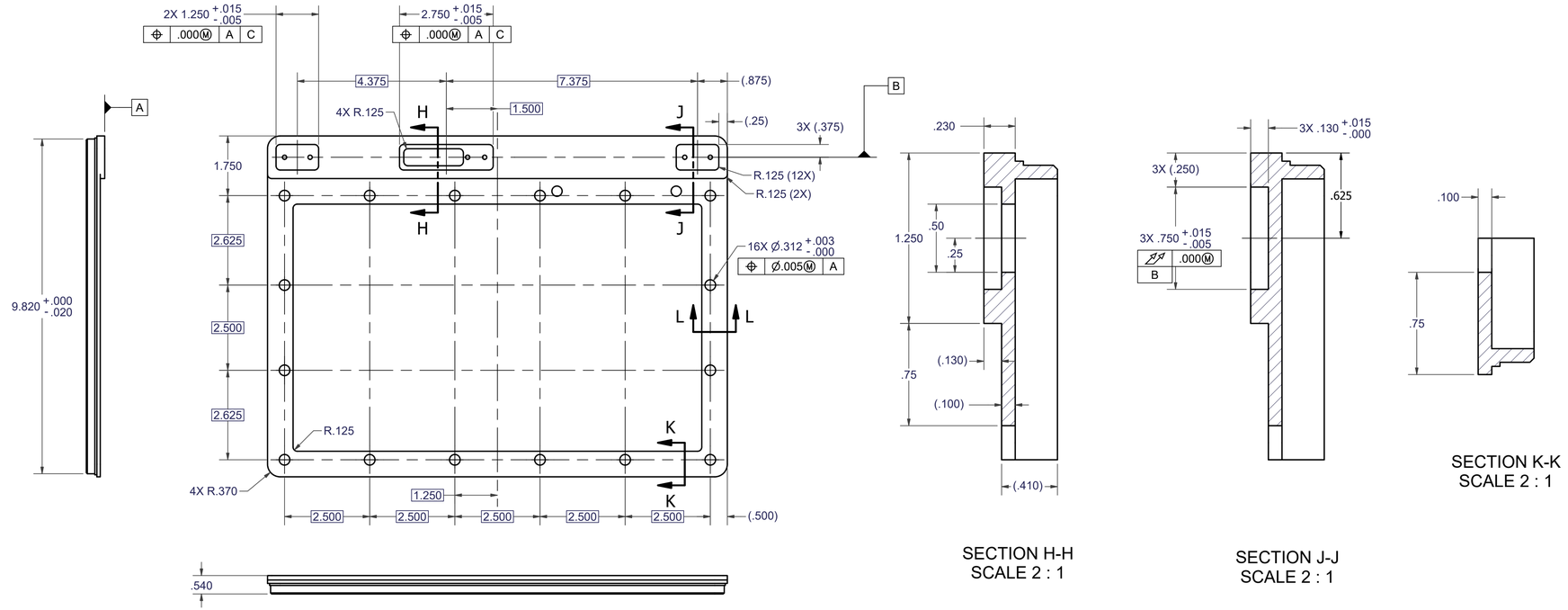

SECTION H-H
SCALE 2 : 1

SECTION J-J
SCALE 2 : 1

SECTION K-K
SCALE 2 : 1

-03 MACHINED MOUNTING PLATE

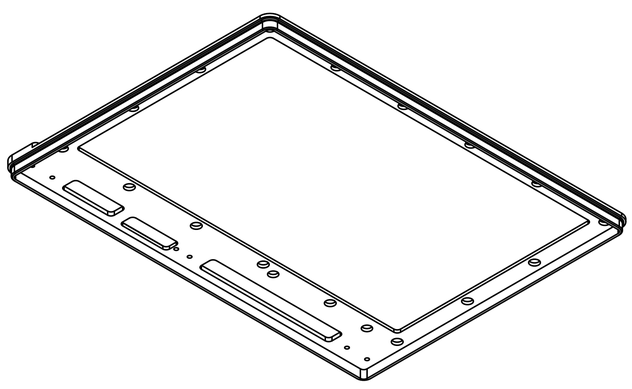

BOTTOM ISOMETRIC
(SHOWN WITHOUT NUTPLATES)

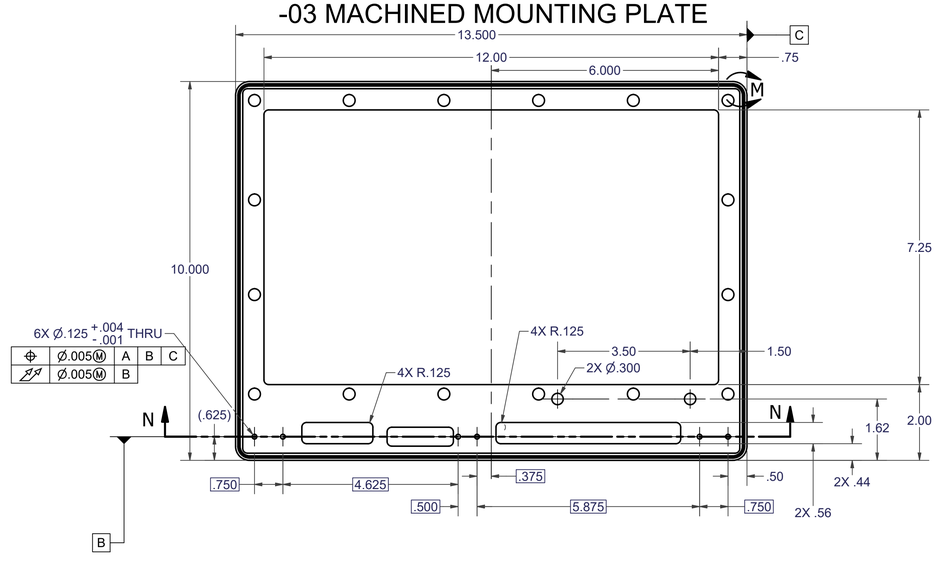

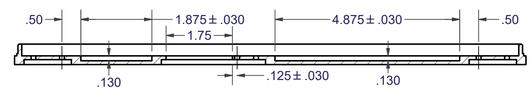

SECTION N-N

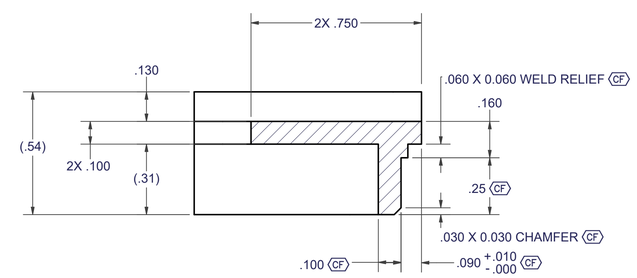

SECTION L-L
SCALE 3 : 1

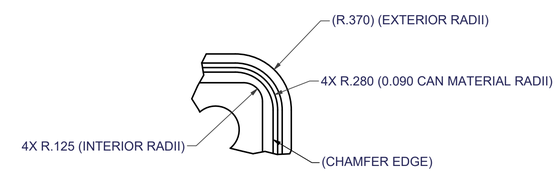

DETAIL M
SCALE 2 : 1

DRAWN:	SIZE	CAGE CODE	DWG NO	REV
J.GILLMOR	D	98752	201754322-40	0.11
CHECKED: T.PRICE	SCALE 1/2		SHEET 7 OF 13	

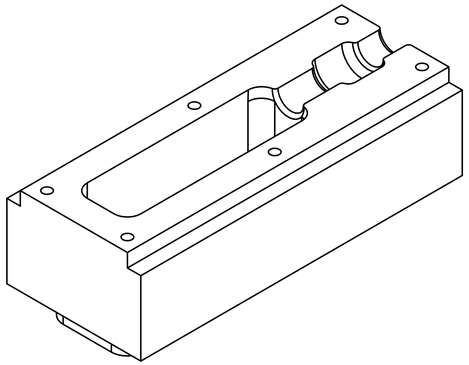

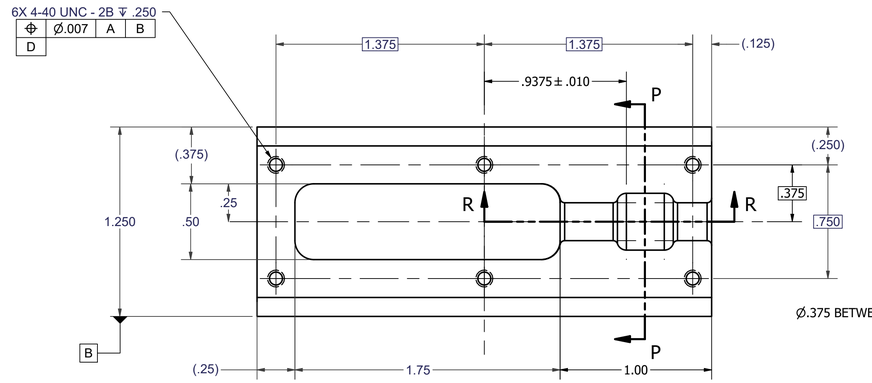

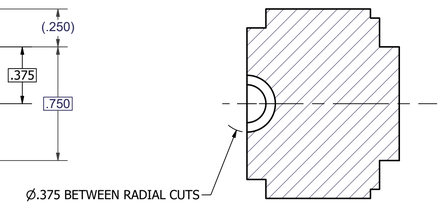

SECTION P-P
SCALE 2 : 1

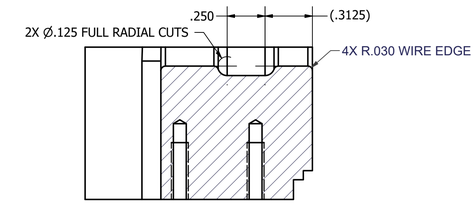

SECTION R-R
SCALE 2 : 1

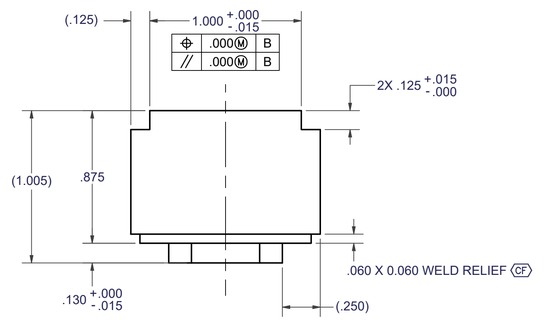

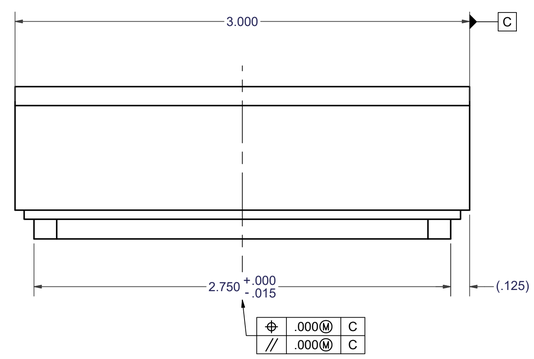

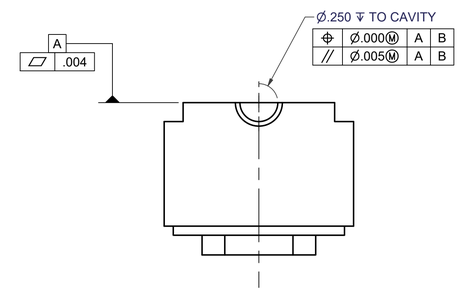

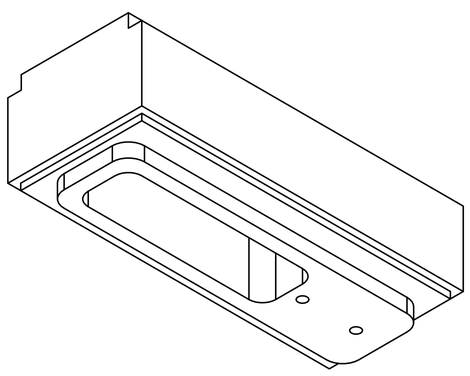

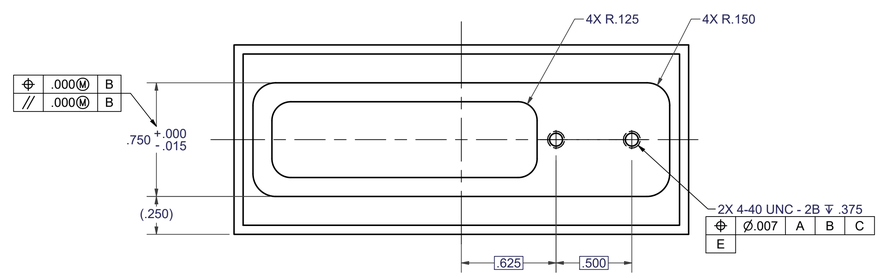

-45 CENTER HINGE BLOCK INSERT

DRAWN:	SIZE	CAGE CODE	DWG NO	REV
J.GILLMOR	D	98752	201754322-40	0.11
CHECKED: T.PRICE	SCALE 2:1		SHEET 8 OF 13	

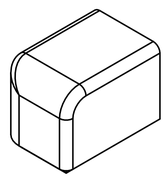

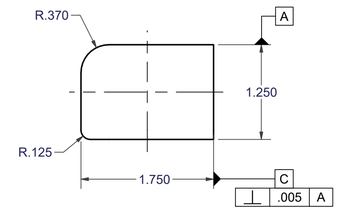

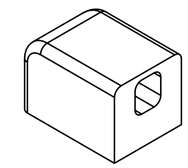

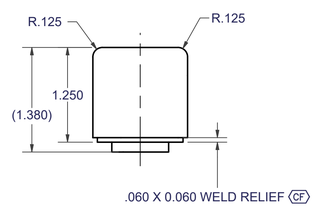

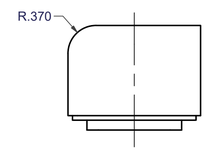

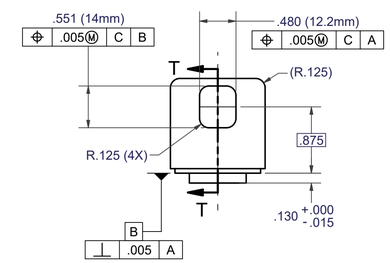

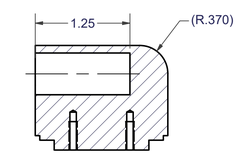

SECTION T-T
SCALE 1 : 1

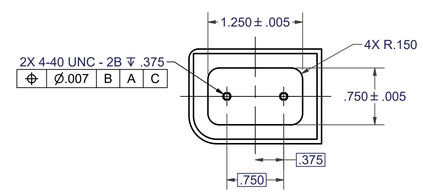

-11 LEFT HINGE BLOCK INSERT
(OPPOSITE -12)

DRAWN:	SIZE	CAGE CODE	DWG NO	REV
J.GILLMOR	D	98752	201754322-40	0.11
CHECKED: T.PRICE	SCALE 1:1		SHEET 9 OF 13	

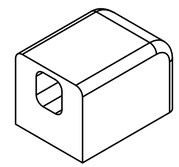

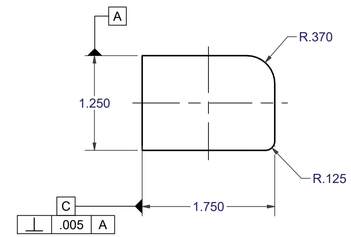

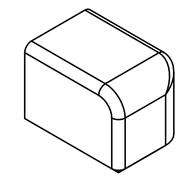

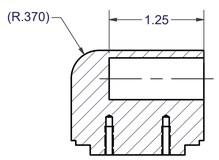

SECTION U-U
SCALE 1 : 1

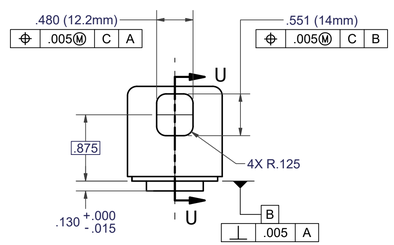

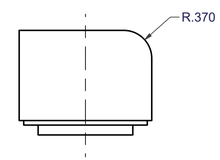

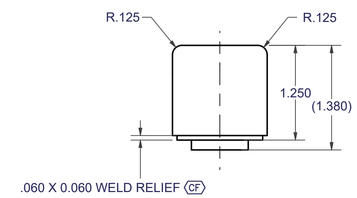

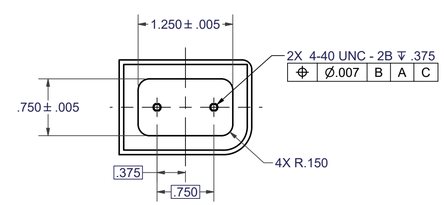

-12 RIGHT HINGE BLOCK INSERT
(OPPOSITE -11)

DRAWN: J.GILLMOR	SIZE D	CAGE CODE 98752	DWG NO 201754322-40	REV 0.11
CHECKED: T.PRICE	SCALE 1:1		SHEET 10 OF 13	

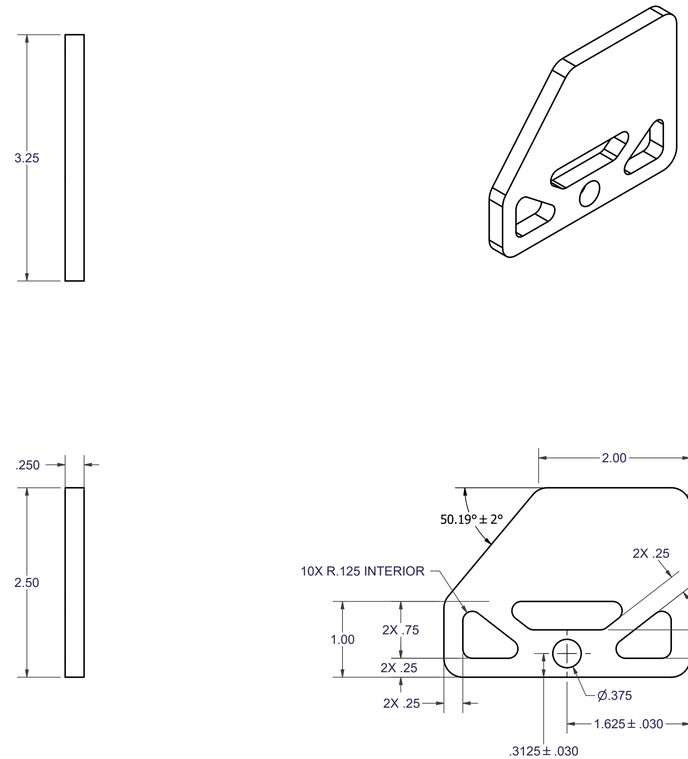

-13 CORNER PLATE

DRAWN: J.GILLMOR	SIZE D	CAGE CODE 98752	DWG NO 201754322-40	REV 0.11
CHECKED: T.PRICE	SCALE 1:1		SHEET 11 OF 13	

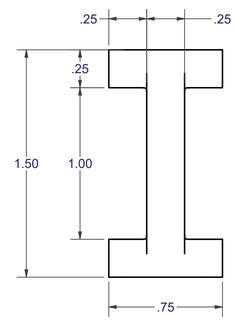

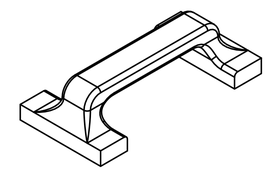

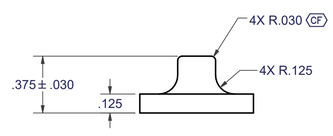

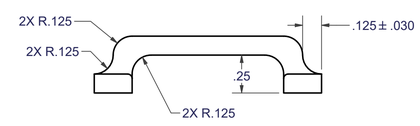

-15 STRAP BLOCK

DRAWN:	SIZE	CAGE CODE	DWG NO	REV
J.GILLMOR	D	98752	201754322-40	0.11
CHECKED: T.PRICE	SCALE 2:1		SHEET 12 OF 13	

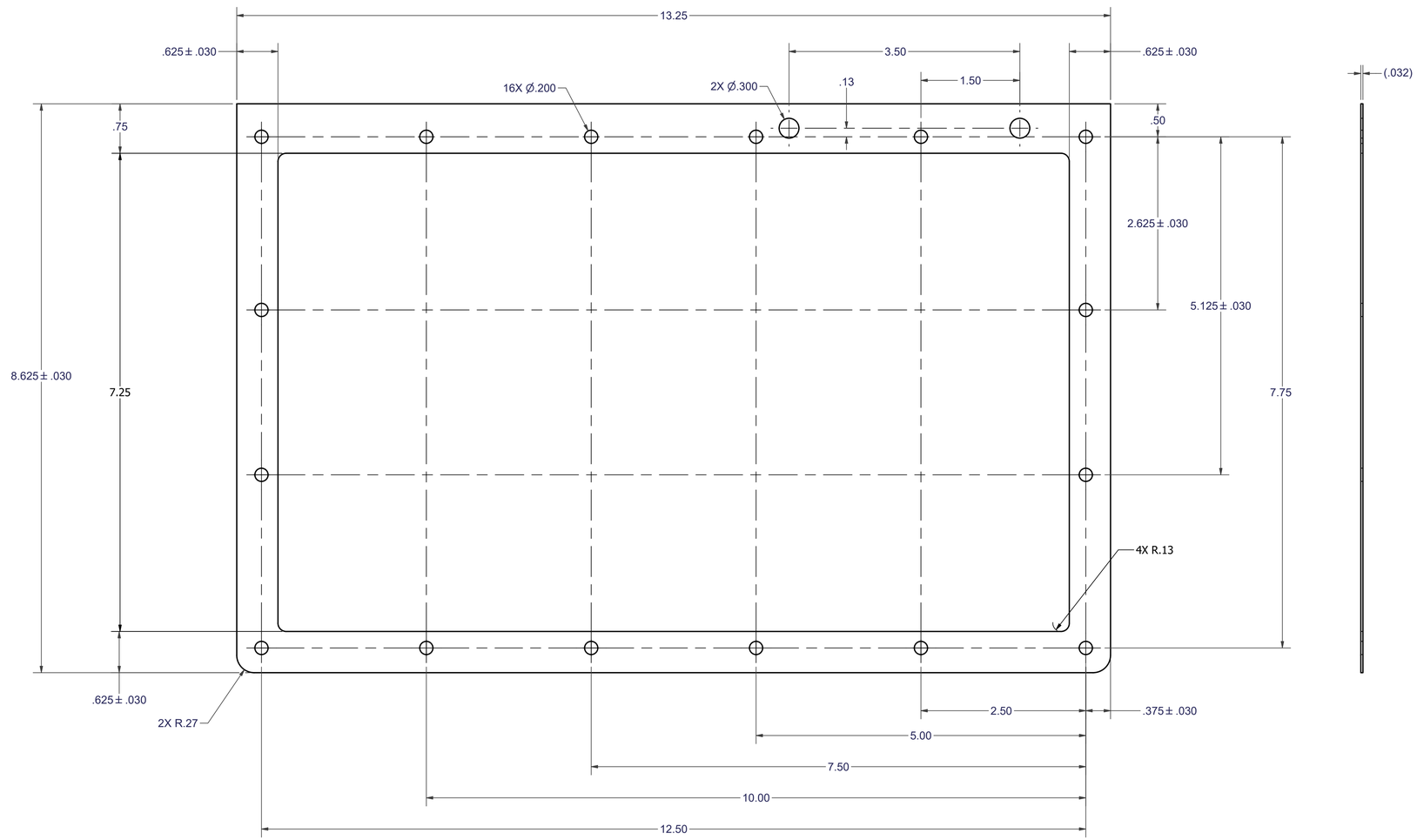

-21 KEYBOARD MOUNT GASKET

(NO FINISH)

DRAWN: J.GILLMOR	SIZE D	CAGE CODE 98752	DWG NO 201754322-40	REV 0.11
CHECKED: T.PRICE	SCALE 1:1		SHEET 13 OF 13	