ALL SHEETS ARE THE SAME REVISION STATUS

REVISION HISTORY			
REV	DESCRIPTION	DATE	APPROVED
0.02	INITIAL RELEASE	3/17/2025	B.BINGHAM

PRELIMINARY
3/17/2025

NOTES:

FINISH: EXCEPT LATCH BODIES, GASKETS, & WHERE SPECIFIED.

A. CHEM FILM PER MIL-DTL-5541, TYPE 1, CLASS 3

B. PRIME EXTERIOR ONLY WITH EPOXY PRIME PER MIL-DTL-0053022, TYPE II EXCEPT ON NOTED AREAS.

C. PAINT EXTERIOR ONLY WITH WHITE POLYURETHANE COATING PER MIL-PRF-85285, TYPE II, CLASS H COLOR # 17925 OF FED-STD-595.

1. IDENTIFY PART IN ACCORDANCE WITH MIL-STD-130. BAG AND TAG ALL ITEMS TOO SMALL TO IDENTIFY.
2. VENDORS LISTED ON THIS DRAWING FOR COMMERCIAL ITEMS ARE A SUGGESTED SOURCE OF SUPPLY ONLY. OTHER VENDORS ARE ACCEPTABLE AS LONG AS THEIR ITEM'S QUALITY MATCHES THOSE OF THE SUGGESTED SOURCE OF SUPPLY LISTED HEREON IN SPECIFICATION, FORM, FIT, AND FUNCTION.
3. IDENTIFICATION OF THE SUGGESTED SOURCE(S) OF SUPPLY HEREON IS NOT TO BE CONSTRUED AS A GUARANTEE OF PRESENT OR CONTINUED AVAILABILITY AS A SOURCE OF SUPPLY FOR THE ITEM(S).
4. WELD ALL JOINTS AND GAPS, GRIND ALL OUTSIDE WELD FLUSH AND SMOOTH. STANDOFFS & STUDS INCLUDED.
5. SEALED CASE CONSTRUCTION, PRESSURE TEST PER MIL-STD-108, TABLE III + NOTE 1, WITH THE OPTIONS THAT PRESSURE CAN BE APPLIED FROM THE INSIDE AND THE TIME INTERVAL CAN BE REDUCED TO A 3 MINUTE MINIMUM. TEST (GASKET & PLUG IN FRONT DOOR OPENING, REAR CUTOUTS AND PANEL OPENING).
6. MASK FROM PRIMER AND PAINT.
7. ALL FABRICATION TO CONFORM TO MIL-HDBK-454 & MIL-STD-108. WELDS CONFORM TO AWS D17.1 (FORMALLY MIL-STD-2219).
8. AFTER FABRICATION, PARTS AND ASSEMBLED EQUIPMENT SHALL BE CLEANED OF SMUDGES; LOOSE, SPATTERED, OR EXCESS SOLDER; WELD METAL; METAL CHIPS AND MOLD RELEASE AGENTS; OR ANY OTHER FOREIGN MATERIAL WHICH MIGHT DETRACT FROM THE INTENDED OPERATION, FUNCTION, OR APPEARANCE OF THE EQUIPMENT.
9. ATTACH TO ENCLOSURE USING EMI ADHESIVE (FIND NO. 7).
10. INSTALL IAW MANUFACTURE'S SPECIFICATIONS AND RECOMMENDED PRACTICES.
11. FOR DIMENSIONS NOT SHOWN REFER TO CAD DATA.
12. CAD DATA IS BASIC UNLESS OTHERWISE SPECIFIED ⌓ 0.030.

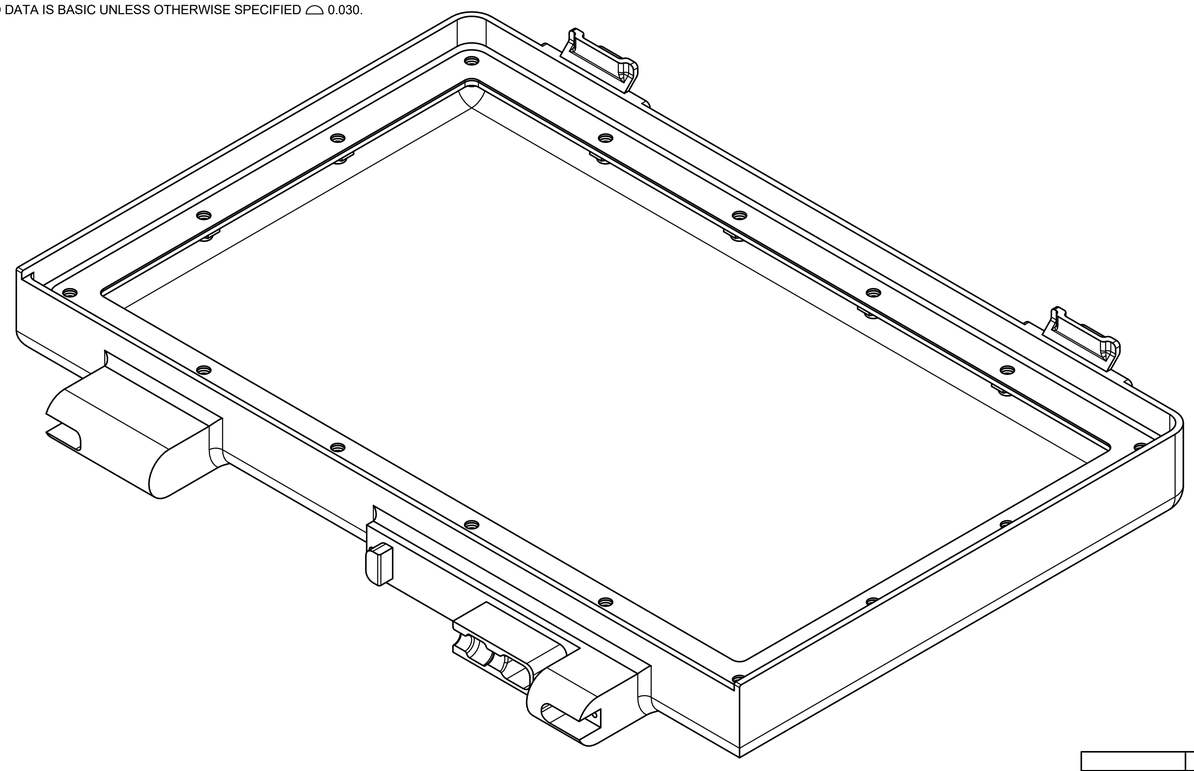

DISTRIBUTION STATEMENT D

DISTRIBUTION AUTHORIZED TO DOD AND U.S. DOD CONTRACTORS ONLY FOR ADMINISTRATIVE OR OPERATIONAL USE. DATE OF DETERMINATION IS . OTHER REQUESTS FOR THIS DOCUMENT SHALL BE REFERRED TO THE ATS PROGRAM OFFICE AFLCMC/WNA-ATS ROBINS A.F.B GA. 31098. QUESTIONS CONCERNING TECHNICAL CONTENT SHALL BE REFERRED TO 309 SWEG/516 SWES/MXDPAF HILL A.F.B. UT. 84056

DESTRUCTION NOTICE

DESTROY BY ANY METHOD THAT WILL PREVENT DISCLOSURE OF CONTENTS OR RECONSTRUCTION OF THE DOCUMENTS.

WARNING

EXPORT CONTROLLED. THIS DOCUMENT CONTAINS TECHNICAL DATA WHOSE EXPORT IS RESTRICTED BY THE ARMS EXPORT CONTROL ACT (TITLE 22, U.S.C.2751 ET SEQ.) OR THE EXPORT ADMINISTRATION ACT OF 1979, AS AMENDED, TITLE 50, U.S.C.,APP. 2401 ET SEQ. VIOLATION OF THESE EXPORT-CONTROL LAWS IS SUBJECT TO SEVERE CRIMINAL PENALTIES. DISSEMINATION OF THIS DOCUMENT IS CONTROLLED UNDER DoD DIRECTIVE 5230.25.

PARTS LIST

FIND NO.	QTY	CAGEC	PART NUMBER	DESCRIPTION	MATERIAL/SPECIFICATION	NOTE
7	AR	41CY0	SS-24	EMI ADHESIVE	NI-GRAPHITE CONDUCTIVE RTV SILICONE	9
6	16	50EB1	LKS-032-2MD	10-32 PEM SELF LOCKING NUTPLATE - HEX	300 SER SST/ NASM25027	10
5	2	98376	ZSP2-229-1	LATCH HOOK	LATCH BASE USED IN ENCLOSURE	
4	1	98752	201754323-13	DISPLAY GASKET	.032 STK SERIES 807 SILVER IN SILICONE (0112)	9
3	1	98752	201754323-47	HINGE BASE WITH WIRE PASS THROUGH, CONSOLIDATED STACK	AL 6061-T6	
2	1	98752	201754323-01	DRAWN LID CAN	.090 STK, AL 6061-T6	
1	1	98752	201754323-05	MACHINED DISPLAY MOUNT	AL 6061-T6	
	X	98752	201754323-40	ENCLOSURE LID WELDMENT, CONSOLIDATED STACK		

NEXT ASSY	USED ON
201754323-30	2020109112-10

APPLICATION

COMPUTER DRAWING

CAD PROG: INVENTOR 2020 VER: FILE NAME: 201754323-40.idw

UNLESS OTHERWISE INDICATED:
-DRAWING WAS PREPARED IN ACCORDANCE WITH ASME 14.100, APPX. B THRU. E
-INTERPRET DRAWINGS IN ACCORDANCE WITH ASME Y14.5-2009
-REMOVE BURRS AND BREAK SHARP EDGES

DESIGNED FOR:

ATS PROGRAM OFFICE

UNLESS OTHERWISE SPECIFIED DIMENSIONS ARE IN INCHES-TOLERANCES ON:

FRACTIONS ± 1/32 DECIMALS .X ± .100 .XX ± .030 .XXX ± .010 ANGLES ± 2°

THIRD ANGLE PROJECTION

		DATE
DRAFTER 516 MXDPAF	J.GILLMOR	3/17/2025
CHECKER 516 MXDPAF	T.PRICE	3/17/2025
PROJECT ENGINEER 516 MXDPAF	T.PRICE	3/17/2025
ENGINEERING APPROVAL 516 MXDPAF	B.BINGHAM	3/17/2025
A.F. AUTHENTICATION AFLCMC/WNAEA	E.MULLINAX	
RELEASE AFLCMC/WNAE	K.SIMPSON	

U.S. AIR FORCE

TITLE

ENCLOSURE LID WELDMENT, CONSOLIDATED STACK

SIZE	CAGE CODE	DWG NO.	REV
D	98752	201754323-40	0.02

SCALE 1:1 WEIGHT 2.54 LBS SHEET 1 OF 8

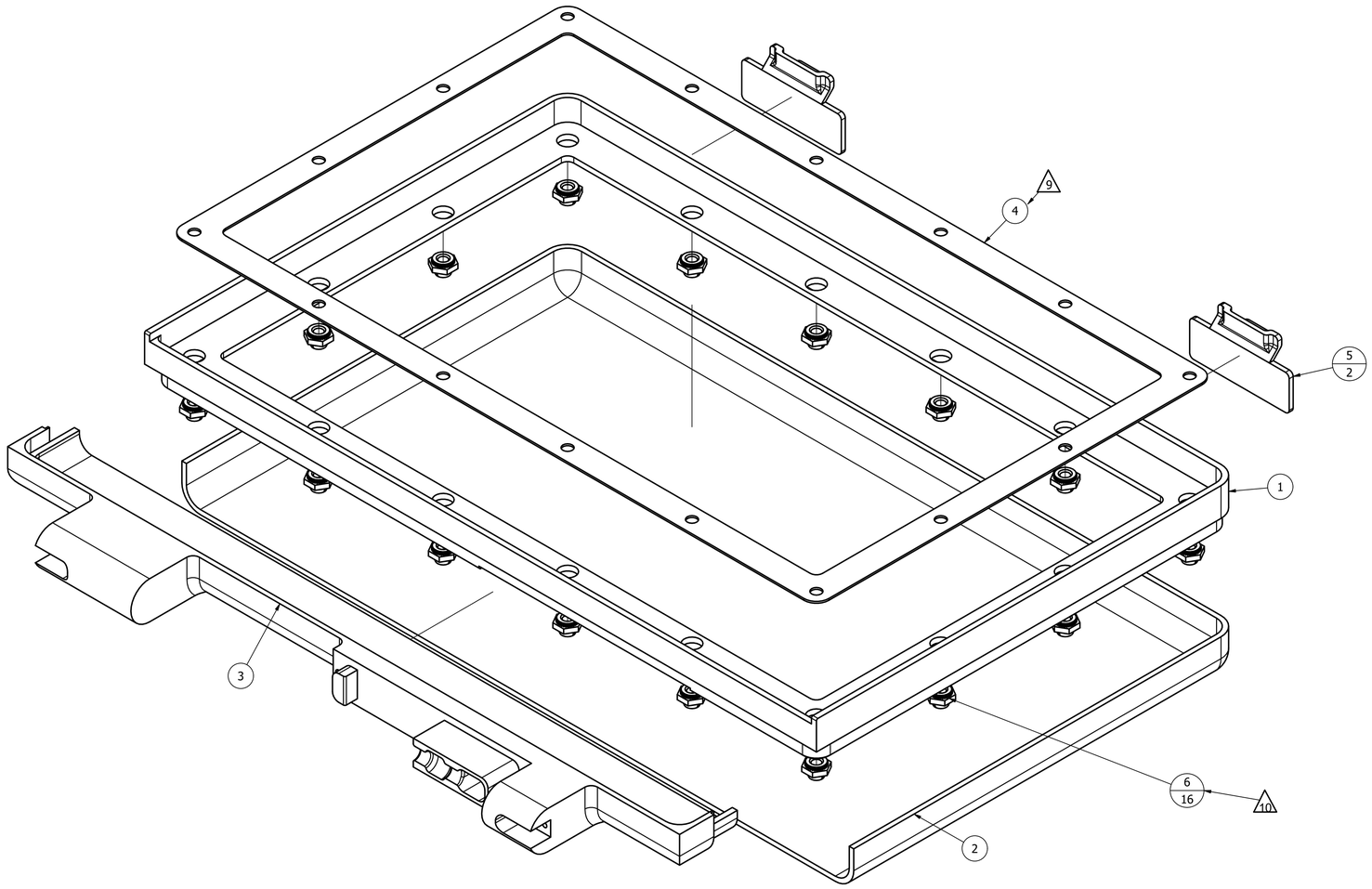

-40 ALIGNMENT REFERENCE VIEW

DRAWN: J.GILLMOR	SIZE D	CAGE CODE 98752	DWG NO 201754323-40	REV 0.02
CHECKED: T.PRICE	SCALE 1:1		SHEET 2 OF 8	

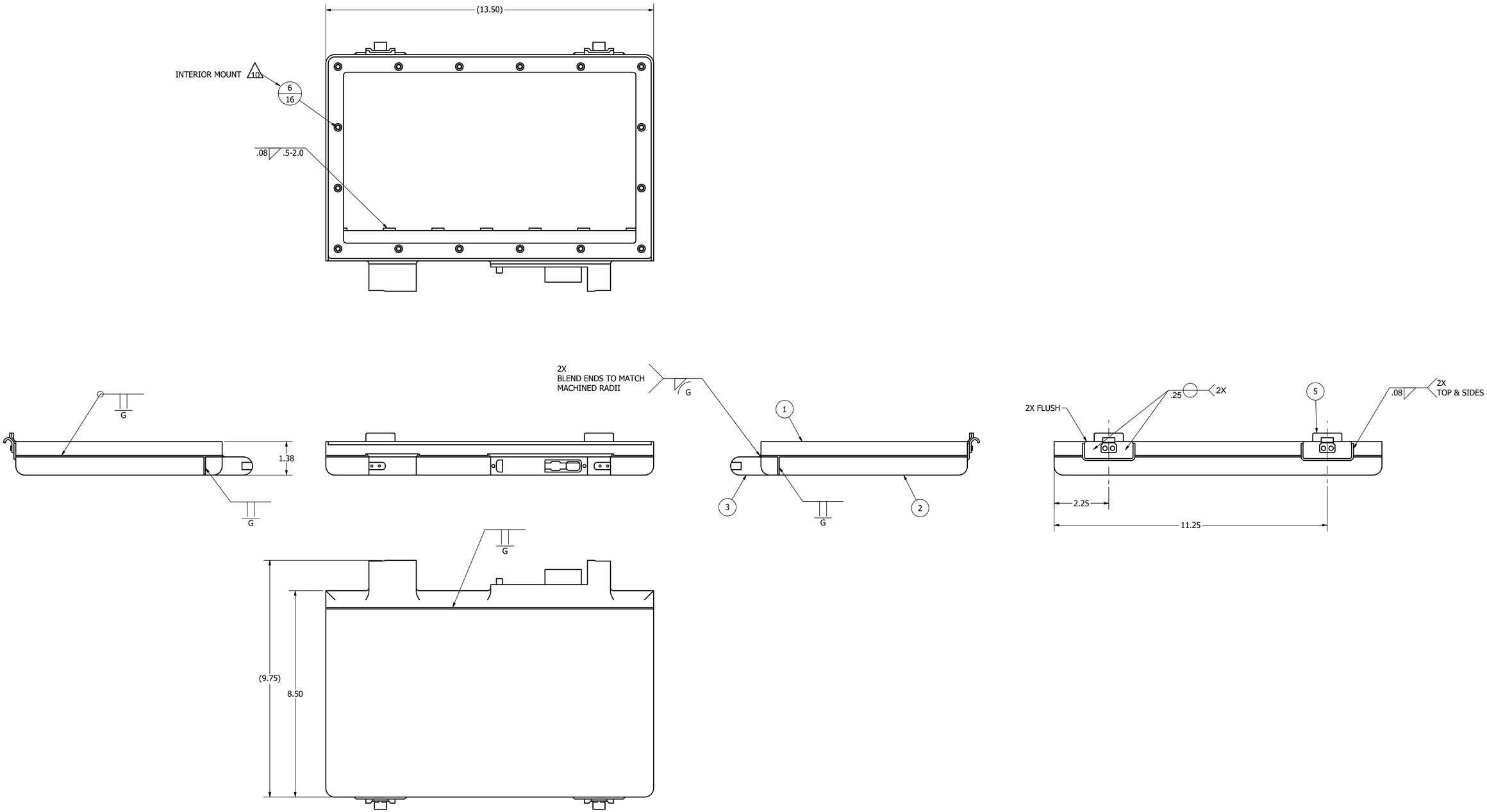

-40 WELD INSTRUCTIONS

(FLUSH GROUND WELD LINES SHOULD BE SMOOTH AND NOT TO BE VISIBLE THROUGH FINISH) 4

DRAWN:	SIZE	CAGE CODE	DWG NO	REV
J.GILLMOR	D	98752	201754323-40	0.02
CHECKED: T.PRICE	SCALE 1:2		SHEET 3 OF 8	

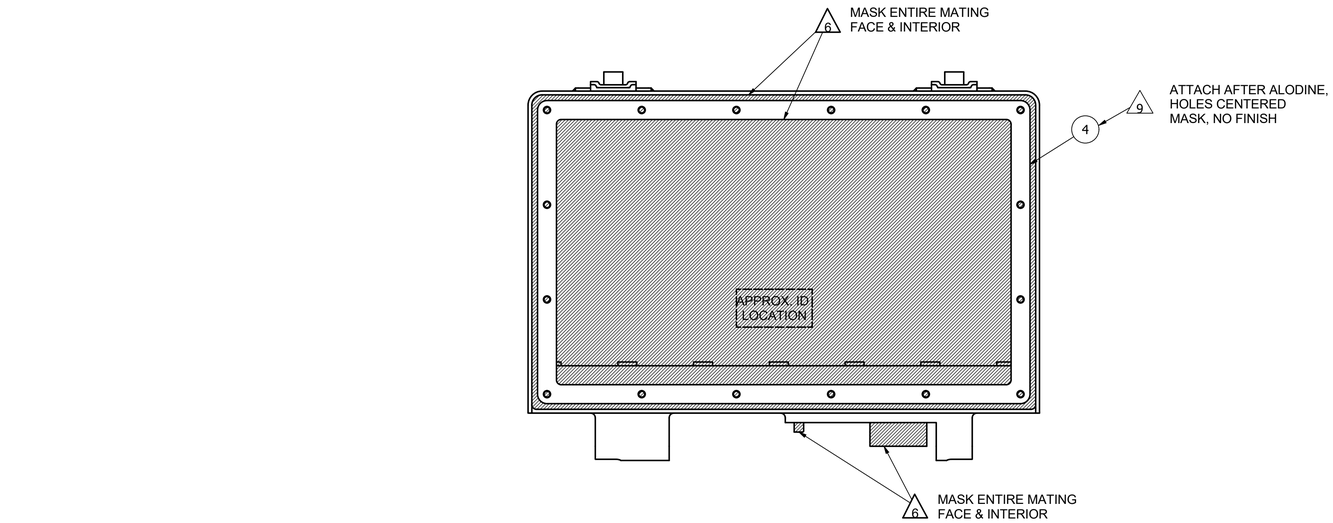

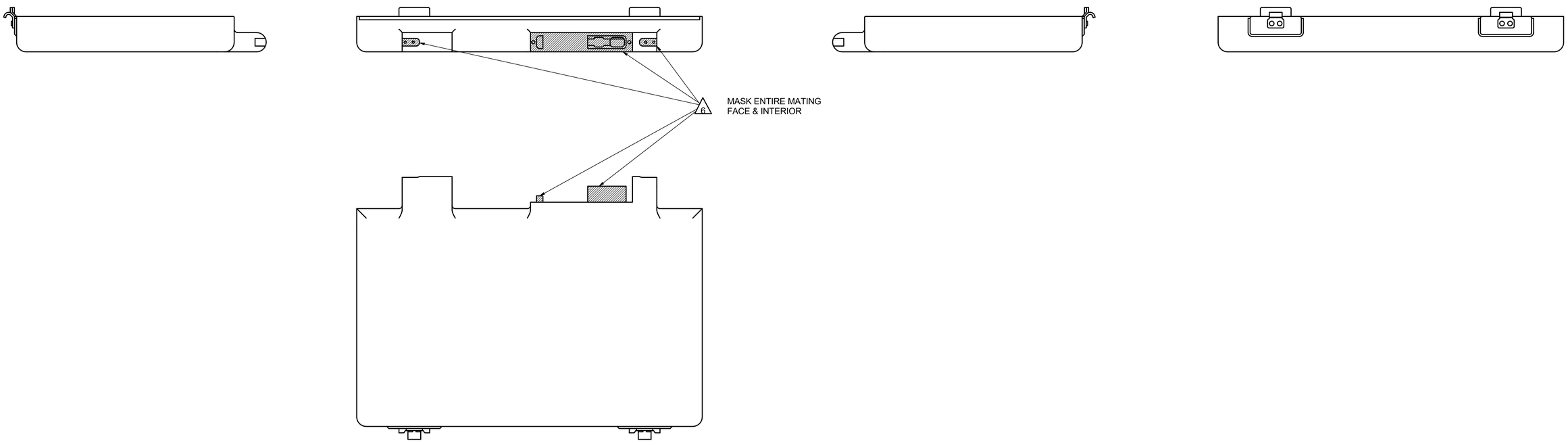

-40 FINISH INSTRUCTIONS

(FLUSH GROUND WELD LINES SHOULD BE SMOOTH AND NOT TO BE VISIBLE THROUGH FINISH)

DRAWN:	SIZE	CAGE CODE	DWG NO	REV
J.GILLMOR	D	98752	201754323-40	0.02
CHECKED: T.PRICE	SCALE 1:2		SHEET 4 OF 8	

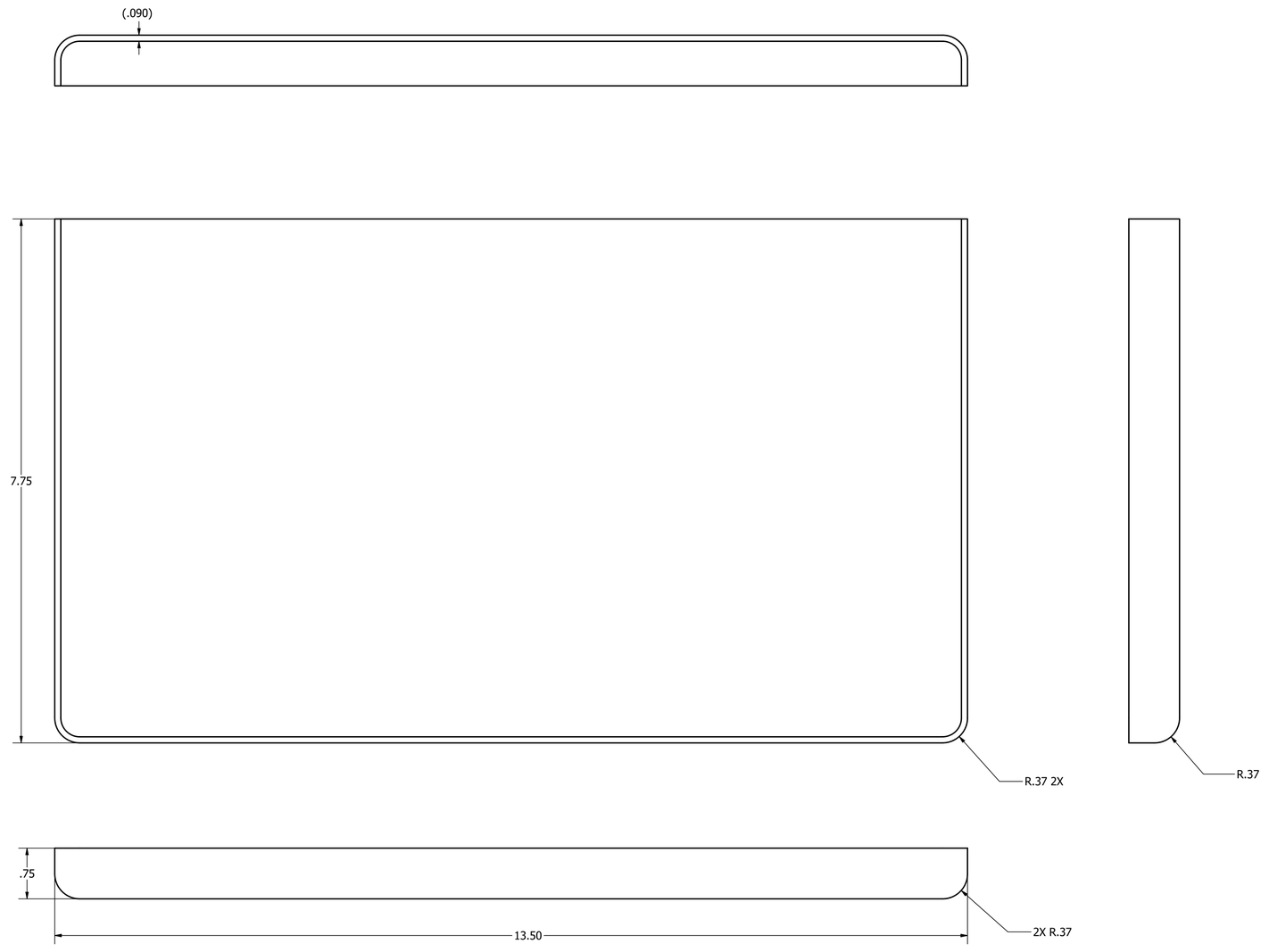

-01 LID CAN
(DRAWN MATERIAL)

DRAWN:	SIZE	CAGE CODE	DWG NO	REV
J.GILLMOR	D	98752	201754323-40	0.02
CHECKED: T.PRICE	SCALE 1:1		SHEET 5 OF 8	

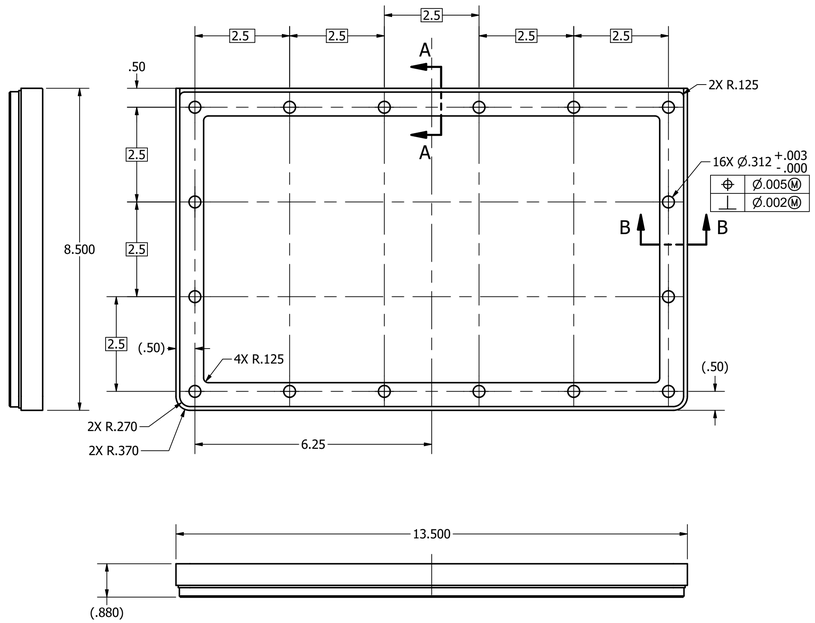

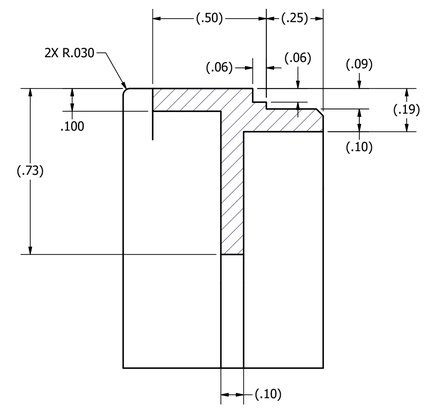

SECTION A-A
SCALE 3 : 1

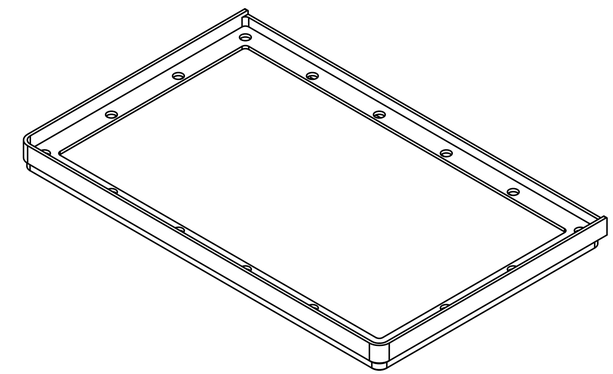

TOP ISOMETRIC

-05 MACHINED DISPLAY MOUNTING PLATE

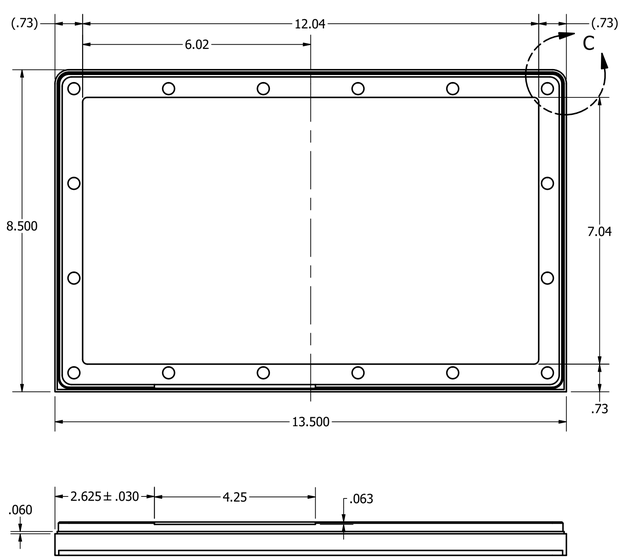

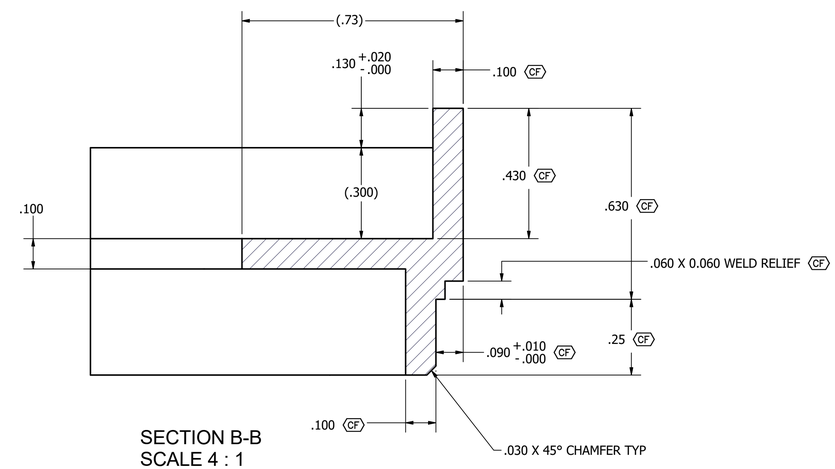

SECTION B-B
SCALE 4 : 1

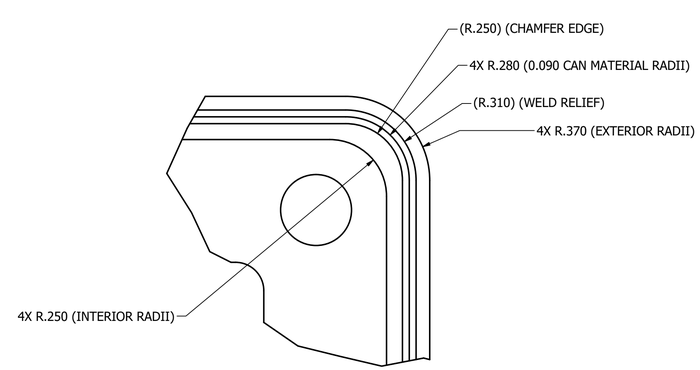

DETAIL C
SCALE 3 : 1

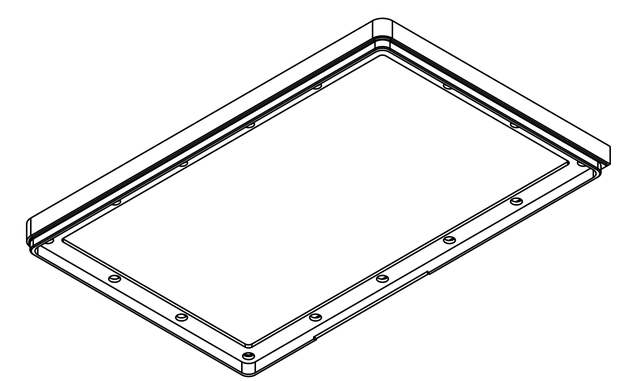

BOTTOM ISOMETRIC
(SHOWN WITHOUT NUTPLATES)

DRAWN:	SIZE	CAGE CODE	DWG NO	REV
J.GILLMOR	D	98752	201754323-40	0.02
CHECKED: T.PRICE	SCALE 1:2		SHEET 6 OF 8	

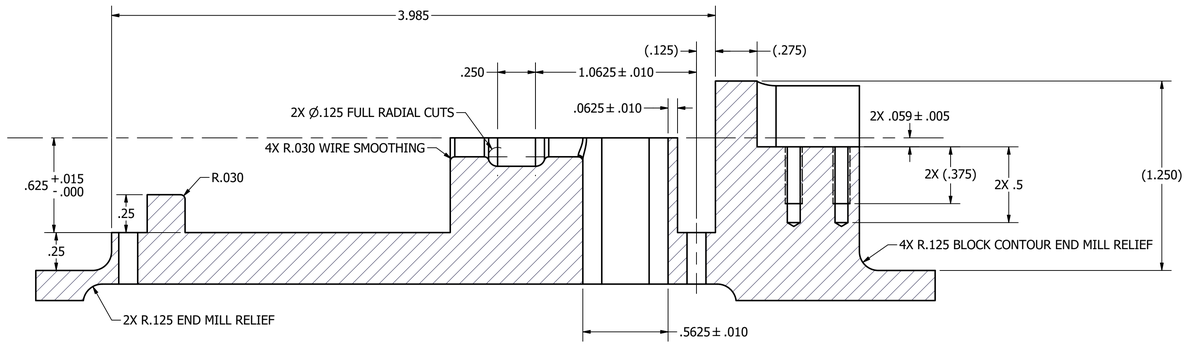

SECTION D-D
SCALE 2 : 1

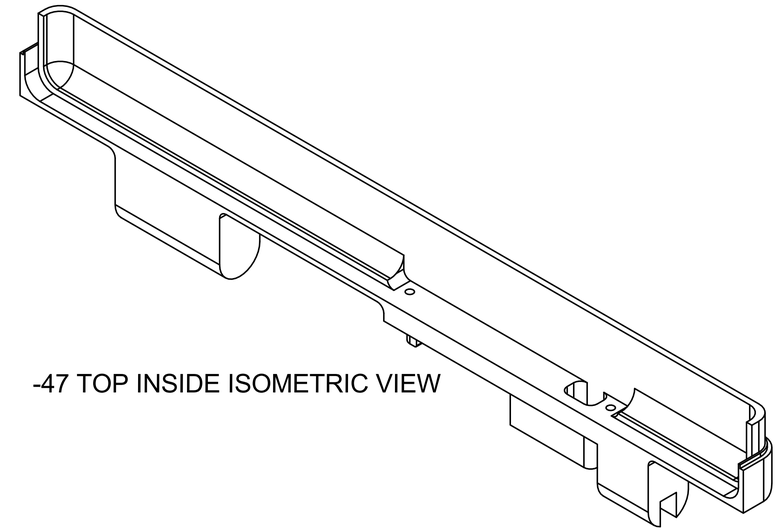

-47 TOP INSIDE ISOMETRIC VIEW

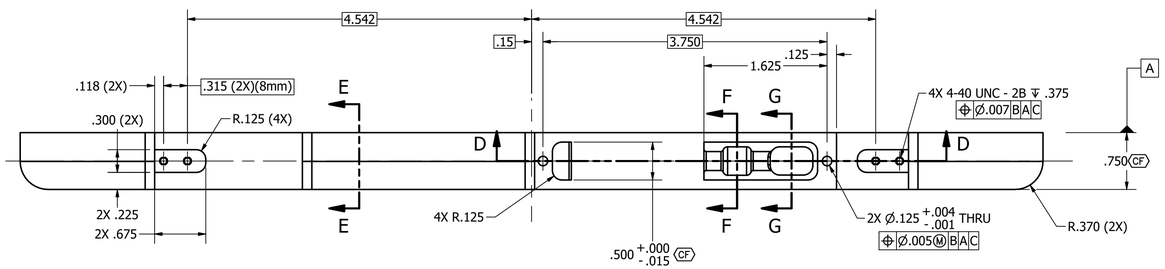

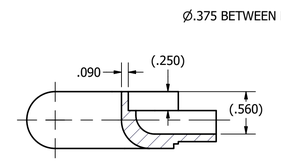

SECTION E-E
SCALE 1 : 1

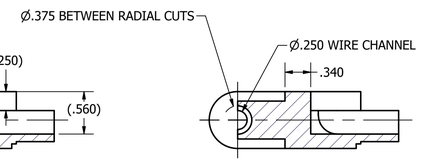

SECTION F-F
SCALE 1 : 1

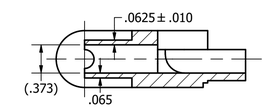

SECTION G-G
SCALE 1 : 1

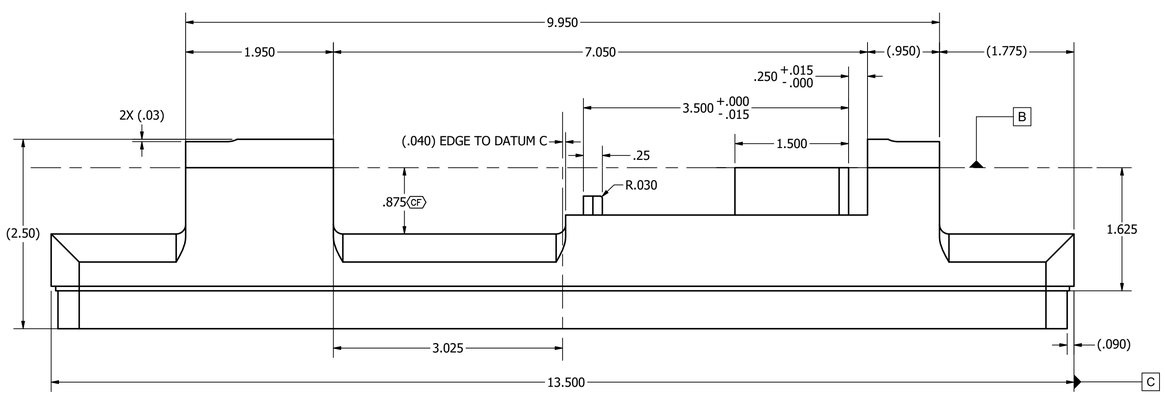

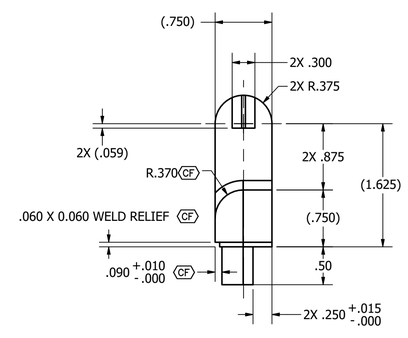

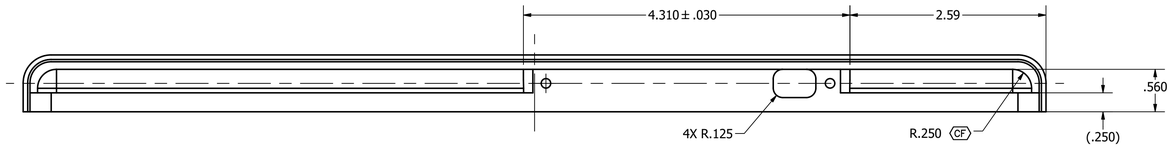

-47 MACHINED DISPLAY SWIVEL

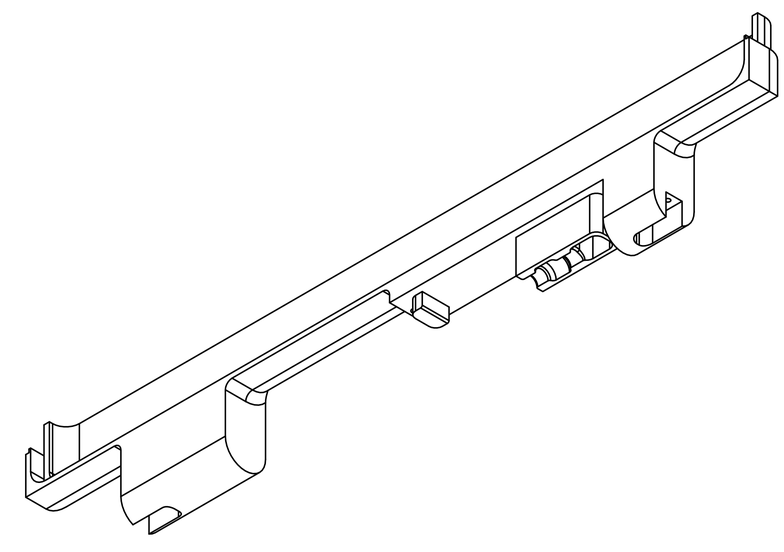

-47 BOTTOM INSIDE ISOMETRIC VIEW

DRAWN:	SIZE	CAGE CODE	DWG NO	REV
J.GILLMOR	D	98752	201754323-40	0.02
CHECKED: T.PRICE	SCALE 1:1		SHEET 7 OF 8	

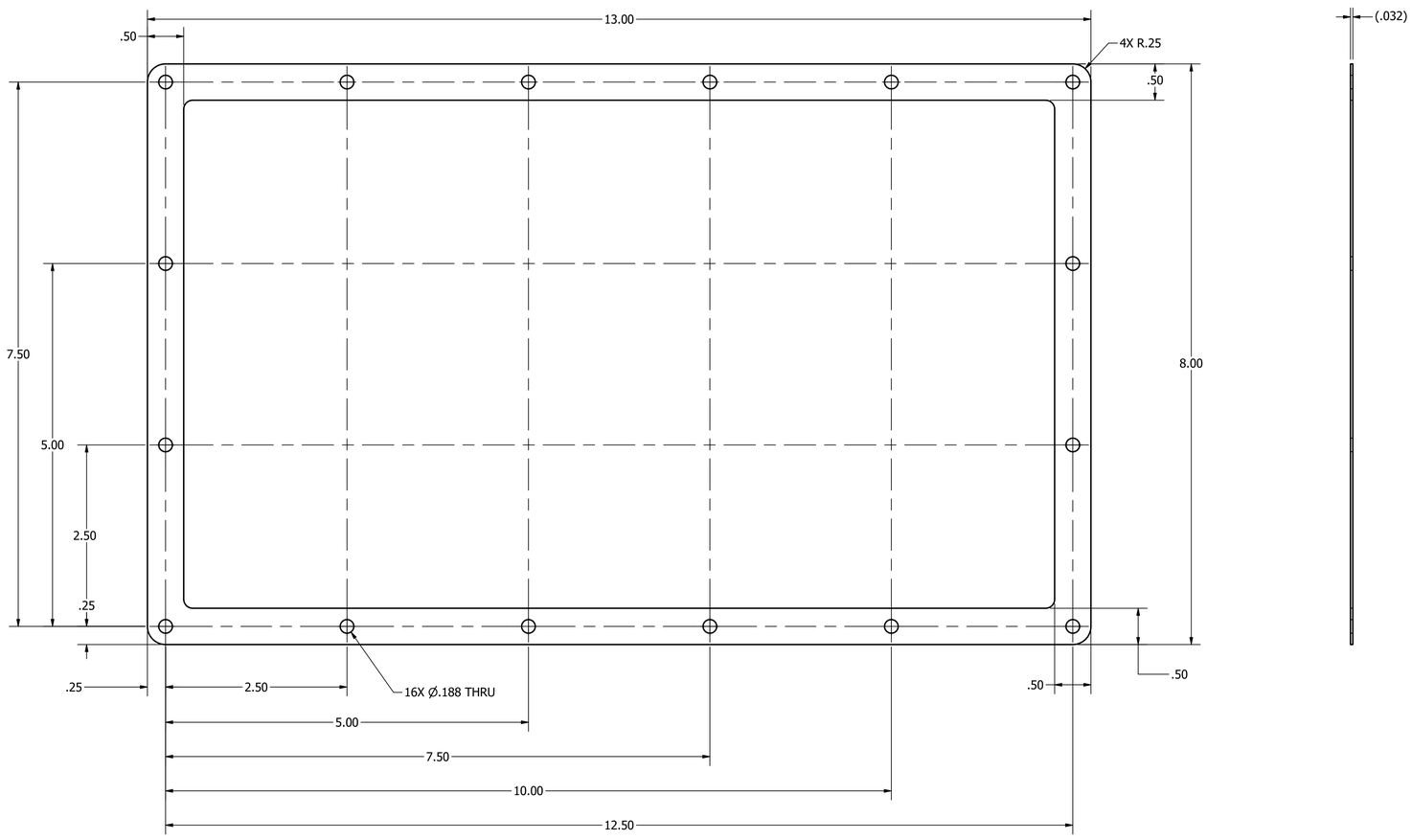

-13 DISPLAY MOUNT GASKET

(NO FINISH)

DRAWN: J.GILLMOR	SIZE D	CAGE CODE 98752	DWG NO 201754323-40	REV 0.02
CHECKED: T.PRICE	SCALE 1:1		SHEET 8 OF 8	