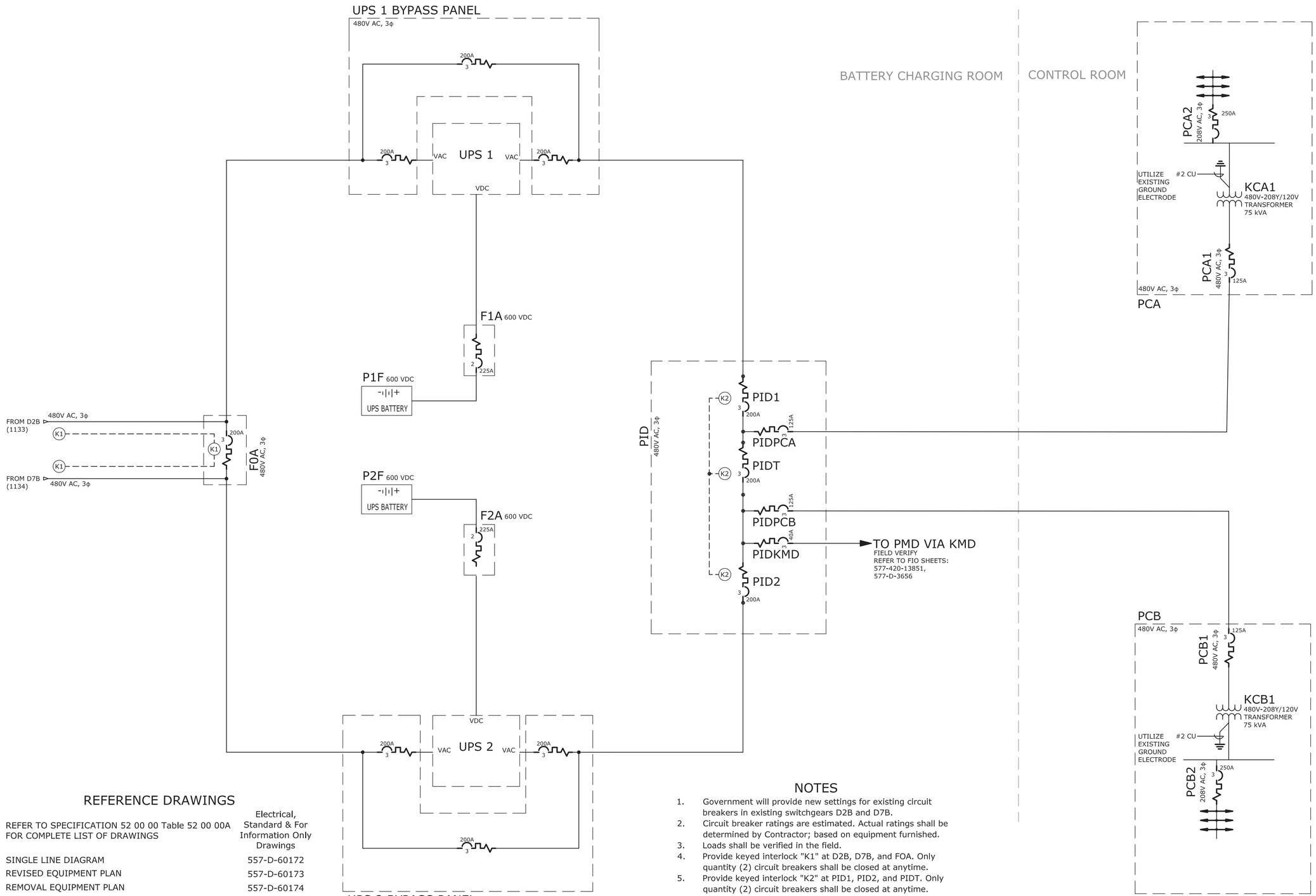

REFERENCE DRAWINGS

REFER TO SPECIFICATION 52 00 00 Table 52 00 00A FOR COMPLETE LIST OF DRAWINGS

	Electrical, Standard & For Information Only Drawings
SINGLE LINE DIAGRAM	557-D-60172
REVISED EQUIPMENT PLAN	557-D-60173
REMOVAL EQUIPMENT PLAN	557-D-60174
PANEL SCHEDULES	557-D-60175
POWER CABLE AND CONDUIT SCHEDULE	557-D-60176
POWER CABLE AND CONDUIT SCHEDULE	557-D-60177

NOTES

1. Government will provide new settings for existing circuit breakers in existing switchgears D2B and D7B.
2. Circuit breaker ratings are estimated. Actual ratings shall be determined by Contractor; based on equipment furnished.
3. Loads shall be verified in the field.
4. Provide keyed interlock "K1" at D2B, D7B, and FOA. Only quantity (2) circuit breakers shall be closed at anytime.
5. Provide keyed interlock "K2" at PID1, PID2, and PIDT. Only quantity (2) circuit breakers shall be closed at anytime.

BUREAU OF RECLAMATION

ALWAYS THINK SAFETY

U.S. DEPARTMENT OF THE INTERIOR
BUREAU OF RECLAMATION
GLEN CANYON DAM STATION SERVICE PROJECT DIVISION

SCADA UNINTERRUPTIBLE POWER SUPPLY REPLACEMENT
COLORADO RIVER STORAGE PROJECT - ARIZONA

REV NO		
1	D	ADDED A SECOND DC SYSTEM
	2025-06-20	ERIC T MENDLIN, PE

KASEY NUNES
DESIGNED
KASEY NUNES
DRAWN
DENNIS O'DONNELL
CHECKED
ERIC MENDLIN, P.E.
TECH. APPR. SUPERVISORY ELECTRICAL ENGINEER
DONNA JOHNSON, P.E.
APPROVED
ADMIN APPROVAL - ELECTRICAL ENGINEER
DENVER 2025-04-18

ELECTRICAL INSTALLATION

SINGLE LINE DIAGRAM

557-D-60172

SHEET 1

2025-06-20
LAST SAVED BY
EMENDLIN

AutoCAD 24.2S (LMS TECH)
CAD FILENAME
557-D-60172-REV1.DWG

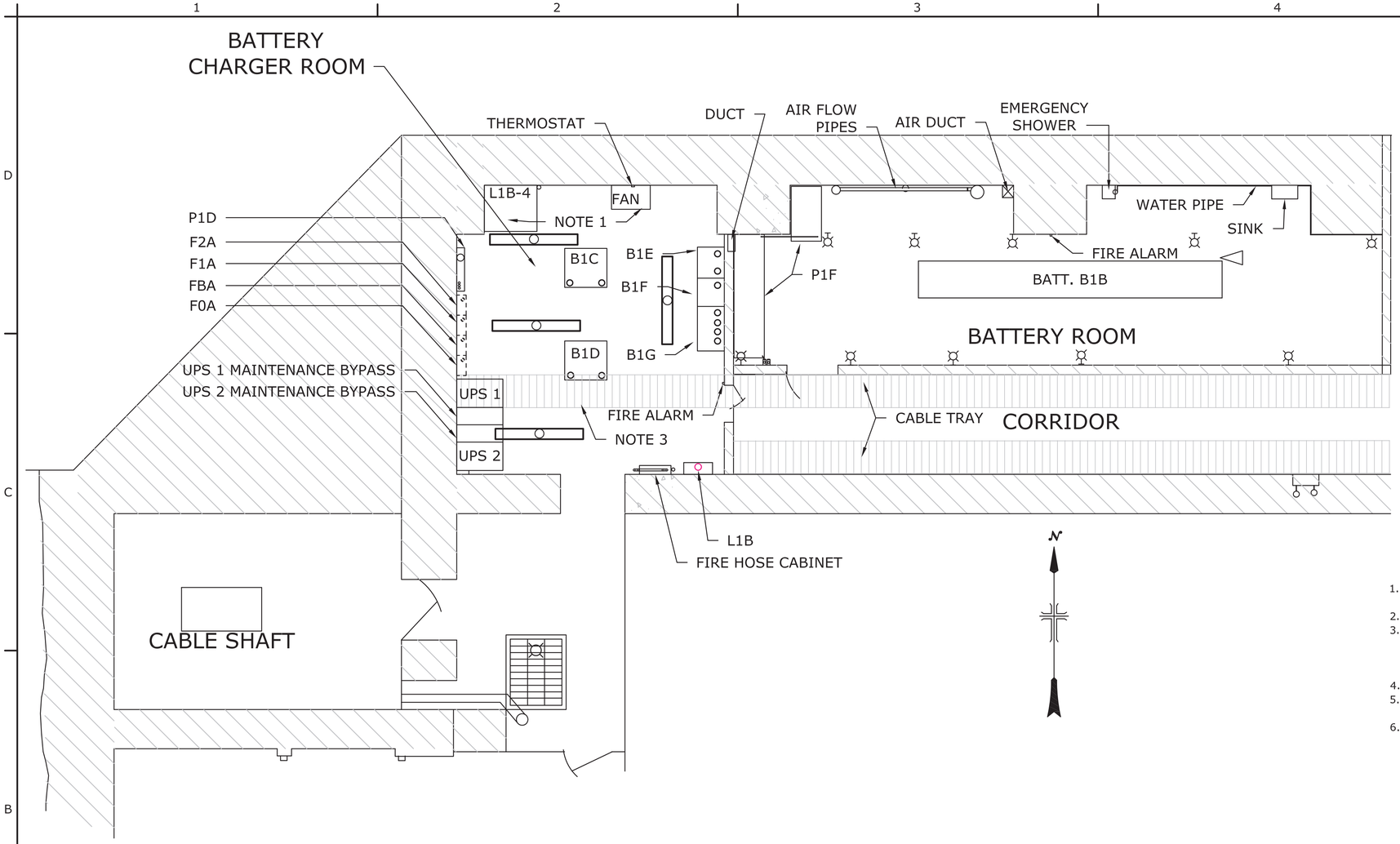

1 REVISED EQUIPMENT PLAN

1/4" = 1'-0"

EXPLANATION

DEVICE	LOCATION	DESCRIPTION
B1B	Battery Room	Main Service Station Battery
B1C	Battery Charger Room	Battery Charger/Rectifier
B1D	Battery Charger Room	Battery Charger/Rectifier
B1E	Battery Charger Room	Battery Charger Panel
B1F	Battery Charger Room	Battery Panel
B1G	Battery Charger Room	Main DC Board
L1B	Battery Charger Room	Lighting Panel
L1B-4	Battery Charger Room	Sealed Bearing Belt
P1D	Battery Charger Room	Distribution Panelboard
P1F	Battery Room	Uninterruptible Power Supply Battery

NOTES

1. L1B-4 and the fan in the battery charger room are approximately 8-9 feet above floor level.
2. Raceway in the corridor is approximately 7-8 feet above floor level.
3. Many of the raceways in the battery charger room have differing elevations. Only the lowest hanging lights and raceway inside the battery charger room are drawn in which are approximately 7-8 feet above floor level.
4. The rooms are drawn to scale.
5. Much of the equipment shown and their relative distances to other equipment and walls are drawn to scale or is a close approximation.
6. Luminaires are shown for coordination purposes only. Luminaires are existing.

LUMINAIRE LEGEND

LED Linear Luminaire

Lighting Wall Pack

Hanging Lights

— BUREAU OF — RECLAMATION

ALWAYS THINK SAFETY

U.S. DEPARTMENT OF THE INTERIOR
BUREAU OF RECLAMATION
GLEN CANYON DAM STATION SERVICE DIVISION

SCADA UNINTERRUPTIBLE POWER SUPPLY REPLACEMENT
COLORADO RIVER STORAGE PROJECT - ARIZONA

KASEY NUNES
DESIGNED
KASEY NUNES
DRAWN
DENNIS O'DONNELL
CHECKED
TECH. APPR. ERIC MENDLIN, P.E.
DONNA JOHNSON Digitally signed by DONNA JOHNSON Date: 2025.05.30 07:50:08 -06'00'
APPROVED
PEER REVIEWER - DONNA JOHNSON, P.E.
DENVER 2025-04-18

ELECTRICAL INSTALLATION

REVISED EQUIPMENT PLAN

557-D-60173

SHEET 1

LAST SAVED DATE
2025-05-29
LAST SAVED BY
DRJOHNSON

CAD SYSTEM
AutoCAD 24.05 (LMS TECH)
CAD FILENAME
557-D-60173.DWG

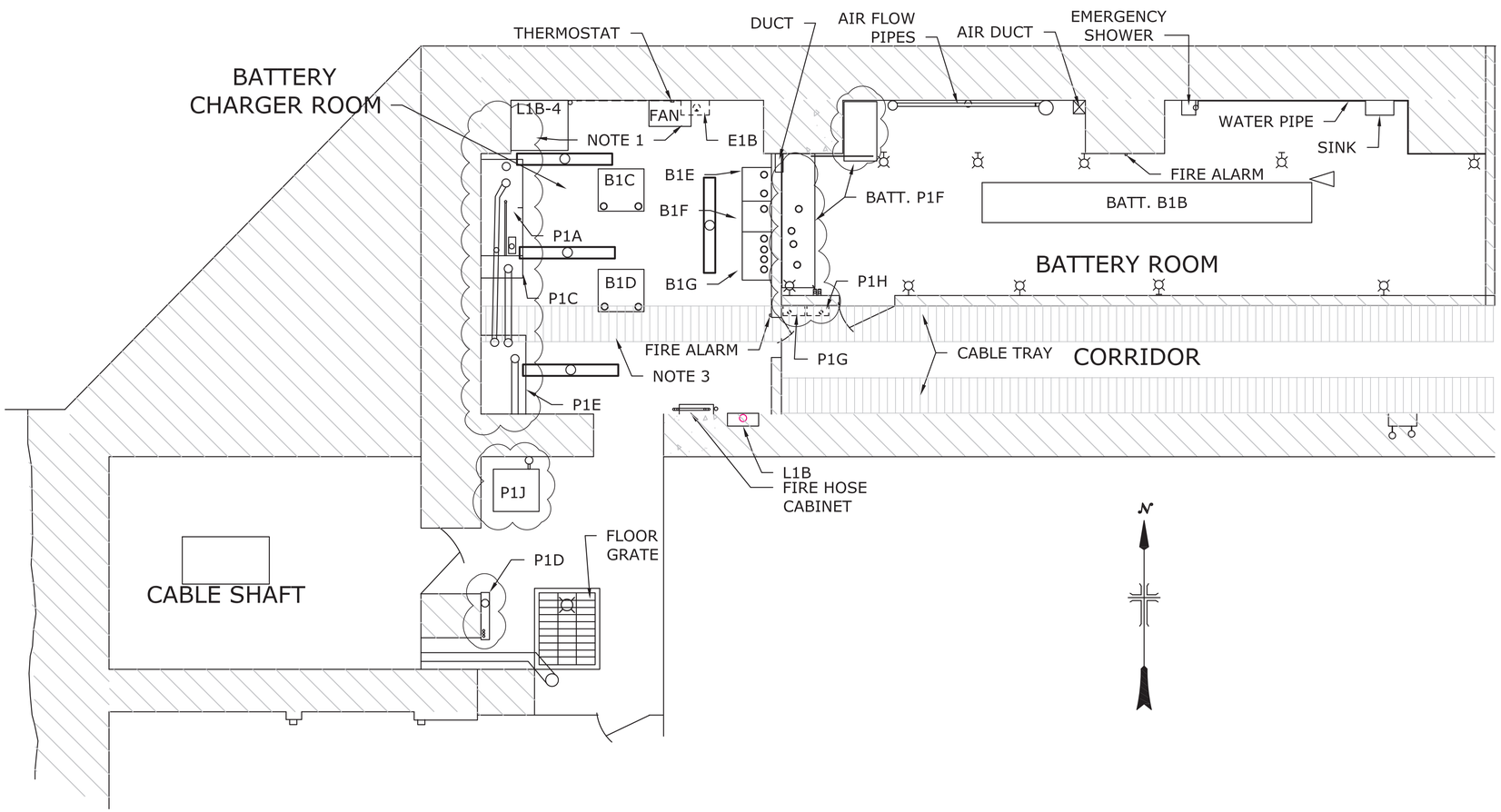

1 REMOVAL EQUIPMENT PLAN

1/4" = 1'-0"

EXPLANATION

DEVICE	LOCATION	DESCRIPTION
B1B	Battery Room	Main Service Station Battery
B1C	Battery Charger Room	Battery Charger/Rectifier
B1D	Battery Charger Room	Battery Charger/Rectifier
B1E	Battery Charger Room	Battery Charger Panel
B1F	Battery Charger Room	Battery Panel
B1G	Battery Charger Room	Main DC Board
L1B	Battery Charger Room	Lighting Panel
L1B-4	Battery Charger Room	Sealed Bearing Belt
P1A	Battery Charger Room	SCADA Uninterruptible Power System (UPS)
P1C	Battery Charger Room	Maintenance Bypass
P1D	Battery Charger Room	Distribution Panelboard
P1E	Battery Charger Room	Datawave Magnetic Synthesizer
P1G	Outside of Battery Room Entrance	DC Breaker #1
P1F	Battery Room	Uninterruptible Power Supply Battery
P1H	Outside of Battery Room Entrance	Spare DC Breaker to SCADA UPS Battery
P1J	Battery Charger Room	UPS Isolation Transformer

NOTES

1. L1B-4 and the fan in the battery charger room are approximately 8-9 feet above floor level.
2. Raceway in the corridor is approximately 7-8 feet above floor level.
3. Many of the raceways in the battery charger room have differing elevations. Only the lowest hanging lights and raceway inside the battery charger room are drawn in which are approximately 7-8 feet above floor level.
4. The rooms are drawn to scale.
5. Much of the equipment shown and their relative distances to other equipment and walls are drawn to scale or is a close approximation.
6. Clouds indicate equipment to be removed. Refer to specification 26 05 05 for equipment to be removed.
7. Luminaires are shown for coordination purposes only. Luminaires remain.

LUMINAIRE LEGEND

LED Linear Luminaire

Lighting Wall Pack

Hanging Lights

— BUREAU OF — RECLAMATION

ALWAYS THINK SAFETY

U.S. DEPARTMENT OF THE INTERIOR
BUREAU OF RECLAMATION
GLEN CANYON DAM STATION SERVICE DIVISION

SCADA UNINTERRUPTIBLE POWER SUPPLY REPLACEMENT
COLORADO RIVER STORAGE PROJECT - ARIZONA

KASEY NUNES
DESIGNED
KASEY NUNES
DRAWN
DENNIS O'DONNELL
CHECKED
TECH. APPR. ERIC MENDLIN, P.E.
DONNA JOHNSON Digitally signed by DONNA JOHNSON Date: 2025.05.30 07:51:19 -06'00'
APPROVED
PEER REVIEWER - DONNA JOHNSON, P.E.
DENVER 2025-04-18

ELECTRICAL INSTALLATION

REMOVAL EQUIPMENT PLAN

557-D-60174

SHEET 1

LAST SAVED DATE 2025-05-29 LAST SAVED BY DJOHNSON

CAD SYSTEM AutoCAD 24.0S (LMS TECH) CAD FILENAME 557-D-60174.DWG

TRANSFORMER LOAD CENTER PCA

SUPPLY FROM:	P1D VIA KCA1	**VOLTS:**	208Y/120	**A.I.C. RATING:**	10,000
MOUNTING:	SURFACE	**PHASES:**	3	**MAINS TYPE:**	MCB
ENCLOSURE:	NEMA 1	**WIRES:**	4	**MCB TRIP RATING:**	250A
BUSSING:	COPPER	**ADDITIONAL FEATURES:**		**MAIN BUS RATING:**	250A

Notes:

CKT	CIRCUIT DESCRIPTION	TRIP	POLES	A		B		C		POLES	TRIP	CIRCUIT DESCRIPTION	CKT
1	CPU A	30	2							2	30	PERIPH CNTRL A	2
3	-	-	-							-	-	-	4
5	DISC A0	20	2							1	30	VG BASE AB	6
7	-	-	-							2	20	MTU A	8
9	DISC A1	20	2							-	-	-	10
11	-	-	-							1	30	LOGGER A	12
13	COLOR CONSOLE A	20	1							1	20	MAP/OPCOM A	14
15	PROCESS INTERFACE AB	30	1							1	30	PERIPH SW A	16
17	REMOTE COMMS AB	30	1							1	30	PERIPH SW B	18
19	RTU INTERFACE AB	30	1							1	20	9TH FLOOR TELECOM RM RCPT	20
21	CPU C	30	2							2	30	PERIPH CNTRL C	22
23	-	-	-							-	-	-	24
25	DISC C0	20	2							1	30	VG BASE C	26
27	-	-	-							2	20	MTU C	28
29	DISC C1	20	2							-	-	-	30
31	-	-	-							1	30	VG BASE C	32
33	COLOR CONSOLE C	20	1							1	20	MAP/OPCOM C	34
35	TELEPHONE ROOM	20	3							1	20	9TH FLOOR TELECOM	36
37	-	-	-							1	20	ROOM 1009	38
39	-	-	-							1	20	CCN PANEL...(1843)...PLC-VS SEC.	40
41	SPACE WITH BUSS									1	20	FCA PANEL...(3769)	42
43	SPACE WITH BUSS											SPACE WITH BUSS	44
45	SPACE WITH BUSS											SPACE WITH BUSS	46
47	SPACE WITH BUSS											SPACE WITH BUSS	48
49	SPACE WITH BUSS											SPACE WITH BUSS	50
51	SPACE WITH BUSS											SPACE WITH BUSS	52
53	SPACE WITH BUSS											SPACE WITH BUSS	54
55	SPACE WITH BUSS											SPACE WITH BUSS	56
57	SPACE WITH BUSS											SPACE WITH BUSS	58
59	SPACE WITH BUSS											SPACE WITH BUSS	60
61	SPACE WITH BUSS											SPACE	62
63	SPACE WITH BUSS											SPACE	64
65	SPACE WITH BUSS											SPACE	66
67	SPACE WITH BUSS											SPACE	68
69	SPACE WITH BUSS											SPACE	70
71	SPACE WITH BUSS											SPACE	72
73	SPACE WITH BUSS											SPACE	74
75	SPACE WITH BUSS											SPACE	76
77	SPACE WITH BUSS											SPACE	78
79	SPACE WITH BUSS											SPACE	80
81	SPACE WITH BUSS											SPACE	82
83	SPACE WITH BUSS											SPACE	84
			TOTAL LOAD:	0 VA		0 VA		0 VA					
			TOTAL AMP:	0 A		0 A		0 A					

LEGEND:

LOAD CLASSIFICATION	CONNECTED LOAD (VA)	DEMAND FACTOR	ESTIMATED DEMAND (VA)	PANEL TOTALS	
LIGHTING		1	0		
RECEPTACLES UP TO 10kVA		1	0	**TOTAL CONN. 3PH LOAD:**	0 VA
RECEPTACLES OVER 10kVA		0.5	0	**TOTAL EST. 3PH DEMAND:**	0 VA
LARGEST MOTOR		1.25	0	**TOTAL CONN.:**	0 A
MOTORS		1	0	**TOTAL EST.:**	0 A
HEATING & AIR CONDITIONING		1	0		
OTHER EQUIPMENT		1	0		

NOTES:

TRANSFORMER LOAD CENTER PCB

SUPPLY FROM:	P1D VIA KCA2	**VOLTS:**	208Y/120	**A.I.C. RATING:**	10,000
MOUNTING:	SURFACE	**PHASES:**	3	**MAINS TYPE:**	MCB
ENCLOSURE:	NEMA 1	**WIRES:**	4	**MCB TRIP RATING:**	250A
BUSSING:	COPPER	**ADDITIONAL FEATURES:**		**MAIN BUS RATING:**	250A

Notes:

CKT	CIRCUIT DESCRIPTION	TRIP	POLES	A		B		C		POLES	TRIP	CIRCUIT DESCRIPTION	CKT
1	CPU B	30	2							2	30	PERIPH CNTRL B	2
3	-	-	-							-	-	-	4
5	DISC B0	20	2							1	30	VG BASE AB	6
7	-	-	-							2	20	MTU B	8
9	DISC B1	20	2							-	-	-	10
11	-	-	-							1	30	LOGGER B	12
13	COLOR CONSOLE B	20	1							1	20	MAP/OPCOM B	14
15	PROCESS INTERFACE AB	30	1							1	30	PERIPH SW A	16
17	REMOTE COMMS AB	30	1							1	30	PERIPH SW B	18
19	RTU INTERFACE AB	30	1							1	20	9TH FLOOR TELECOM RM RCPT	20
21	NETWORK CNTRL/ANALOG PATCH AB	20	1							1	20	NETWORK CNTRL EQUIP AB	22
23	COLOR CONSOLE AB	20	1							1	20	LOGGER AB	24
25	CNTRL RM RCPT CKT1	20	1							1	20	RTU 30	26
27	CNTRL RM RCPT CKT2	20	1							1	20	CNTRL RM RCPT CKT5	28
29	CNTRL RM RCPT CKT3	20	1							1	20	CNTRL RM RCPT CKT6	30
31	CNTRL RM RCPT CKT4	20	1							1	20	SPARE	32
33	CMPTR RM RCPT CKT1	20	1							1	20	PERIPH RM RCPT CKT1	34
35	CMPTR RM RCPT CKT2	20	1							1	20	PERIPH RM RCPT CKT2	36
37	CMPTR RM RCPT CKT3	20	1							1	20	PERIPH RM RCPT CKT3	38
39	REAR CNTRL RM RCPT CKT1	20	1							1	20	PERIPH RM RCPT CKT4	40
41	REAR CNTRL RM RCPT CKT2	30	3							1	20	9TH FLOOR TELECOM RM RCPT	42
43	-	-	-							3	100	24PCB2-PCC	44
45	-	-	-							-	-	-	46
47	SPACE WITH BUSS									-	-	-	48
49	SPACE WITH BUSS											SPACE WITH BUSS	50
51	SPACE WITH BUSS											SPACE WITH BUSS	52
53	SPACE WITH BUSS											SPACE WITH BUSS	54
55	SPACE WITH BUSS											SPACE WITH BUSS	56
57	SPACE WITH BUSS											SPACE WITH BUSS	58
59	SPACE WITH BUSS											SPACE WITH BUSS	60
61	SPACE											SPACE	62
63	SPACE											SPACE	64
65	SPACE											SPACE	66
67	SPACE											SPACE	68
69	SPACE											SPACE	70
71	SPACE											SPACE	72
73	SPACE											SPACE	74
75	SPACE											SPACE	76
77	SPACE											SPACE	78
79	SPACE											SPACE	80
81	SPACE											SPACE	82
83	SPACE											SPACE	84
			TOTAL LOAD:	0 VA		0 VA		0 VA					
			TOTAL AMP:	0 A		0 A		0 A					

LEGEND:

LOAD CLASSIFICATION	CONNECTED LOAD (VA)	DEMAND FACTOR	ESTIMATED DEMAND (VA)	PANEL TOTALS	
LIGHTING		1	0		
RECEPTACLES UP TO 10kVA		1	0	**TOTAL CONN. 3PH LOAD:**	0 VA
RECEPTACLES OVER 10kVA		0.5	0	**TOTAL EST. 3PH DEMAND:**	0 VA
LARGEST MOTOR		1.25	0	**TOTAL CONN.:**	0 A
MOTORS		1	0	**TOTAL EST.:**	0 A
HEATING & AIR CONDITIONING		1	0		
OTHER EQUIPMENT		1	0		

NOTES:

BUREAU OF RECLAMATION

ALWAYS THINK SAFETY

U.S. DEPARTMENT OF THE INTERIOR
BUREAU OF RECLAMATION
GLEN CANYON DAM STATION SERVICE DIVISION

SCADA UNINTERRUPTIBLE POWER SUPPLY REPLACEMENT
COLORADO RIVER STORAGE PROJECT - ARIZONA

KASEY NUNES
DESIGNED
KASEY NUNES
DRAWN
DENNIS O'DONNELL
CHECKED
TECH. APPR. ERIC MENDLIN, P.E.
DONNA JOHNSON Digitally signed by DONNA JOHNSON Date: 2025.05.30 07:50:23 -06'00'
APPROVED
PEER REVIEWER - DONNA JOHNSON, P.E.
DENVER 2025-04-18

ELECTRICAL

PANEL SCHEDULES

557-D-60175

SHEET 1

LAST SAVED DATE 2025-05-30
LAST SAVED BY DRJOHNSON

CAD SYSTEM AutoCAD LAYOUT (LMS TECH)
CAD FILENAME 557-D-60175.DWG

POWER CABLE AND CONDUIT SCHEDULE

CONDUIT NUMBER	CONDUIT SIZE -TYPE	ELBOW & VERTICAL CONDUIT - TYPE	AMPACITY	CONDUCTORS	ORIGIN	DESTINATION	NOTES
1	2" - RMC	RMC	200	3 1/C 3/0 + 1 1/C 3/0 + 1 #6_G	D2B	F0A	
2	2" - RMC	RMC	200	3 1/C 3/0 + 1 1/C 3/0 + 1 #6_G	D7B	F0A	
3	2" - RMC	RMC	200	3 1/C 3/0 + 1 1/C 3/0 + 1 #6_G	F0A	UPS 1 BY PASS PANEL	
4	2" - RMC	RMC	200	3 1/C 3/0 + 1 1/C 3/0 + 1 #6_G	F0A	UPS 2 BY PASS PANEL	
5	2" - RMC	RMC	200	3 1/C 3/0 + 1 1/C 3/0 + 1 #6_G	UPS 1 BYSPASS PANEL	UPS 1 SUPPLY SIDE	
6	2" - RMC	RMC	200	3 1/C 3/0 + 1 1/C 3/0 + 1 #6_G	UPS 1 BYSPASS PANEL	UPS 1 LOAD SIDE	
7	2" - RMC	RMC	200	3 1/C 3/0 + 1 1/C 3/0 + 1 #6_G	UPS 1 BYSPASS PANEL	P1D1	
8	2" - RMC	RMC	200	3 1/C 3/0 + 1 1/C 3/0 + 1 #6_G	UPS 2 BYPASS PANEL	UPS 2 SUPPLY SIDE	
9	2" - RMC	RMC	200	3 1/C 3/0 + 1 1/C 3/0 + 1 #6_G	UPS 2 BYPASS PANEL	UPS 2 LOAD SIDE	
10	2" - RMC	RMC	200	3 1/C 3/0 + 1 1/C 3/0 + 1 #6_G	UPS 2 BYPASS PANEL	P1D2	
11-NOT USED							
12	1-1/4" - RMC	RMC	230	2-1/C 4/0	P1F	F1A	
13	1-1/4" - RMC	RMC	230	2-1/C 4/0	P2F	F2A	
14	1-1/4" - RMC	RMC	230	2-1/C 4/0	F1A	UPS 1	
15	1-1/4" - RMC	RMC	230	2-1/C 4/0	F2A	UPS 2	
16	1-1/4" - RMC	RMC	125	3 1/C 1/0 + 1 #6_G	P1DPCA	PCA	
17	1-1/4" - RMC	RMC	125	3 1/C 1/0 + 1 #6_G	P1DPCB	PCB	
18	3/4" - RMC	RMC	40	3 1/C #8 + 1 #10_G	P1DKMD	KMD	
19	not used	not used	250	3 1/C 250 + 1 1/C 250 + 1 #4_G	KCA1	PCA2	MANUFACTURER'S INTERNAL WIRING
20	not used	not used	250	3 1/C 250 + 1 1/C 250 + 1 #4_G	KCB1	PCB2	MANUFACTURER'S INTERNAL WIRING
21	FIELD VERIFY	FIELD VERIFY		4/C - 8	PCA	CPU A	RECONNECT EXISTING CONDUCTORS
22	FIELD VERIFY	FIELD VERIFY		3/C - 10	PCA	DISC A0	RECONNECT EXISTING CONDUCTORS
23	FIELD VERIFY	FIELD VERIFY		3/C - 10	PCA	DISC A1	RECONNECT EXISTING CONDUCTORS
24	FIELD VERIFY	FIELD VERIFY		3/C - 12	PCA	COLOR CONSOLE A	RECONNECT EXISTING CONDUCTORS
25	FIELD VERIFY	FIELD VERIFY		3/C - 10	PCA	PROCESS INTERFACE AB	RECONNECT EXISTING CONDUCTORS
26	FIELD VERIFY	FIELD VERIFY		3/C - 10	PCA	REMOTE COMMS AB	RECONNECT EXISTING CONDUCTORS
27	FIELD VERIFY	FIELD VERIFY		3/C - 10	PCA	RTU INTERFACE AB	RECONNECT EXISTING CONDUCTORS
28	FIELD VERIFY	FIELD VERIFY		4/C - 8	PCA	CPU C	RECONNECT EXISTING CONDUCTORS
29	FIELD VERIFY	FIELD VERIFY		3/C - 10	PCA	DISC C0	RECONNECT EXISTING CONDUCTORS
30	FIELD VERIFY	FIELD VERIFY		3/C - 10	PCA	DISC C1	RECONNECT EXISTING CONDUCTORS
31	FIELD VERIFY	FIELD VERIFY		3/C - 12	PCA	COLOR CONSOLE C	RECONNECT EXISTING CONDUCTORS
32	FIELD VERIFY	FIELD VERIFY		5/C - 6	PCA	TELEPHONE ROOM	RECONNECT EXISTING CONDUCTORS
33	FIELD VERIFY	FIELD VERIFY		4/C - 8	PCA	PERIPH CNTRL A	RECONNECT EXISTING CONDUCTORS
34	FIELD VERIFY	FIELD VERIFY		3/C - 10	PCA	VG BASE AB	RECONNECT EXISTING CONDUCTORS
35	FIELD VERIFY	FIELD VERIFY		3/C - 10	PCA	MTU A	RECONNECT EXISTING CONDUCTORS
36	FIELD VERIFY	FIELD VERIFY		3/C - 12	PCA	LOGGER A	RECONNECT EXISTING CONDUCTORS
37	FIELD VERIFY	FIELD VERIFY		3/C - 12	PCA	MAP/OPCOM A	RECONNECT EXISTING CONDUCTORS
38	FIELD VERIFY	FIELD VERIFY		3/C - 10	PCA	PERIPH SW A	RECONNECT EXISTING CONDUCTORS
39	FIELD VERIFY	FIELD VERIFY		3/C - 10	PCA	PERIPH SW B	RECONNECT EXISTING CONDUCTORS
40	FIELD VERIFY	FIELD VERIFY		3/C - 12	PCA	9TH FLOOR TELECOM RM RCPT	RECONNECT EXISTING CONDUCTORS
41	FIELD VERIFY	FIELD VERIFY		4/C - 8	PCA	PERIPH CNTRL C	RECONNECT EXISTING CONDUCTORS
42	FIELD VERIFY	FIELD VERIFY		3/C - 10	PCA	VG BASE C	RECONNECT EXISTING CONDUCTORS
43	FIELD VERIFY	FIELD VERIFY		3/C - 10	PCA	MTU C	RECONNECT EXISTING CONDUCTORS
44	FIELD VERIFY	FIELD VERIFY		3/C - 10	PCA	VG BASE C	RECONNECT EXISTING CONDUCTORS
45	FIELD VERIFY	FIELD VERIFY		3/C - 12	PCA	MAP/OPCOM C	RECONNECT EXISTING CONDUCTORS
46	FIELD VERIFY	FIELD VERIFY		3/C - 12	PCA	9TH FLOOR TELECOM	RECONNECT EXISTING CONDUCTORS
47	FIELD VERIFY	FIELD VERIFY		FIELD VERIFY	PCA	ROOM 1009	RECONNECT EXISTING CONDUCTORS
48	FIELD VERIFY	FIELD VERIFY		3/C - 12	PCA	CCN PANEL...(1843)...PLC-CS SEC.	RECONNECT EXISTING CONDUCTORS
49	FIELD VERIFY	FIELD VERIFY		3/C - 12	PCA	FCA PANEL...(3769)	RECONNECT EXISTING CONDUCTORS
50	FIELD VERIFY	FIELD VERIFY		4/C - 8	PCB	CPU B	RECONNECT EXISTING CONDUCTORS
51	FIELD VERIFY	FIELD VERIFY		3/C - 10	PCB	DISC B0	RECONNECT EXISTING CONDUCTORS
52	FIELD VERIFY	FIELD VERIFY		3/C - 10	PCB	DISC B1	RECONNECT EXISTING CONDUCTORS
53	FIELD VERIFY	FIELD VERIFY		3/C - 12	PCB	COLOR CONSOLE B	RECONNECT EXISTING CONDUCTORS
54	FIELD VERIFY	FIELD VERIFY		3/C - 10	PCB	PROCESS INTERFACE AB	RECONNECT EXISTING CONDUCTORS
55	FIELD VERIFY	FIELD VERIFY		3/C - 10	PCB	REMOTE COMMS AB	RECONNECT EXISTING CONDUCTORS
56	FIELD VERIFY	FIELD VERIFY		3/C - 10	PCB	RTU INTERFACE AB	RECONNECT EXISTING CONDUCTORS
57	FIELD VERIFY	FIELD VERIFY		3/C - 10	PCB	NETWORK CNTRL/ANALOG PATCH AB	RECONNECT EXISTING CONDUCTORS
58	FIELD VERIFY	FIELD VERIFY		3/C - 12	PCB	COLOR CONSOLE AB	RECONNECT EXISTING CONDUCTORS
59	FIELD VERIFY	FIELD VERIFY		3/C - 10	PCB	CNTRL RM RCPT CKT1	RECONNECT EXISTING CONDUCTORS

NOTES

1. EXISTING PANELS PCA AND PCB EXISTING CONDUCTOR SIZES WERE TAKEN FROM FOR INFORMATION ONLY (FIO) DRAWINGS:
557-420-13692,
577-420-13691,
577-420-13693,
577-420-13659,
557-D-3660.

2. DESTINATIONS OF EXISTING PCA AND PCB CIRCUITS WERE TAKEN FROM FOR INFORMATION ONLY (FIO) DRAWINGS:
557-420-13692,
577-420-13691,
577-420-13693,
577-420-13659,
557-D-3660.

REFERENCE DRAWINGS

ELECTRICAL - SINGLE LINE DIAGRAM	557-D-60172
ELECTRICAL - PANEL SCHEDULES	557-D-60176

BUREAU OF RECLAMATION

ALWAYS THINK SAFETY

U.S. DEPARTMENT OF THE INTERIOR
BUREAU OF RECLAMATION
GLEN CANYON DAM STATION SERVICE DIVISION

SCADA UNINTERRUPTIBLE POWER SUPPLY REPLACEMENT
COLORADO RIVER STORAGE PROJECT - ARIZONA

REV NO		
1	2025-06-20 ERIC T MENDLIN, PE	D REMOVED CONDUIT L1 AND RENAMED ORIGIN FOR CONDUITS L2 and L3.

KASEY NUNES
DESIGNED
KASEY NUNES
DRAWN
DENNIS O'DONNELL
CHECKED
ERIC MENDLIN, P.E.
TECH. APPR. SUPERVISORY ELECTRICAL ENGINEER
DONNA JOHNSON, P.E.
APPROVED ELECTRICAL ENGINEER
PEER REVIEWER

DENVER, CO 2025-04-18

ELECTRICAL INSTALLATION

POWER CABLE AND CONDUIT SCHEDULE

557-D-60176

SHEET 1

LAST SAVED DATE 2025-06-20
LAST SAVED BY EMENDLIN

CAD SYSTEM AutoCAD Plant 3D 2025 (LMS TECH)
CAD FILENAME 557-D-60176-REV1.DWG

POWER CABLE AND CONDUIT SCHEDULE

CONDUIT NUMBER	CONDUIT SIZE -TYPE	ELBOW & VERTICAL CONDUIT - TYPE	CONDUCTORS	ORIGIN	DESTINATION	NOTES
60	FIELD VERIFY	FIELD VERIFY	3/C - 10	PCB	CNTRL RM RCPT CKT2	RECONNECT EXISTING CONDUCTORS
61	FIELD VERIFY	FIELD VERIFY	3/C - 10	PCB	CNTRL RM RCPT CKT3	RECONNECT EXISTING CONDUCTORS
62	FIELD VERIFY	FIELD VERIFY	3/C - 10	PCB	CNTRL RM RCPT CKT4	RECONNECT EXISTING CONDUCTORS
63	FIELD VERIFY	FIELD VERIFY	3/C - 12	PCB	CMPTR RM RCPT CKT1	RECONNECT EXISTING CONDUCTORS
64	FIELD VERIFY	FIELD VERIFY	3/C - 12	PCB	CMPTR RM RCPT CKT2	RECONNECT EXISTING CONDUCTORS
65	FIELD VERIFY	FIELD VERIFY	3/C - 12	PCB	CMPTR RM RCPT CKT3	RECONNECT EXISTING CONDUCTORS
66	FIELD VERIFY	FIELD VERIFY	3/C - 12	PCB	REAR CNTRL RM RCPT CKT1	RECONNECT EXISTING CONDUCTORS
67	FIELD VERIFY	FIELD VERIFY	3/C - 12	PCB	REAR CNTRL RM RCPT CKT2	RECONNECT EXISTING CONDUCTORS
68	FIELD VERIFY	FIELD VERIFY	4/C - 10	PCB	PERIPH CNTRL B	RECONNECT EXISTING CONDUCTORS
69	FIELD VERIFY	FIELD VERIFY	3/C - 10	PCB	VG BASE AB	RECONNECT EXISTING CONDUCTORS
70	FIELD VERIFY	FIELD VERIFY	3/C - 10	PCB	MTU B	RECONNECT EXISTING CONDUCTORS
71	FIELD VERIFY	FIELD VERIFY	3/C - 12	PCB	LOGGER B	RECONNECT EXISTING CONDUCTORS
72	FIELD VERIFY	FIELD VERIFY	3/C - 12	PCB	MAP/OPCOM B	RECONNECT EXISTING CONDUCTORS
73	FIELD VERIFY	FIELD VERIFY	3/C - 10	PCB	PERIPH SW A	RECONNECT EXISTING CONDUCTORS
74	FIELD VERIFY	FIELD VERIFY	3/C - 10	PCB	PERIPH SW B	RECONNECT EXISTING CONDUCTORS
75	FIELD VERIFY	FIELD VERIFY	3/C - 10	PCB	9TH FLOOR TELECOM RM RCPT	RECONNECT EXISTING CONDUCTORS
77	FIELD VERIFY	FIELD VERIFY	3/C - 10	PCB	NETWORK CNTRL EQUIP AB	RECONNECT EXISTING CONDUCTORS
78	FIELD VERIFY	FIELD VERIFY	3/C - 12	PCB	LOGGER AB	RECONNECT EXISTING CONDUCTORS
79	FIELD VERIFY	FIELD VERIFY	3/C - 10	PCB	RTU 30	RECONNECT EXISTING CONDUCTORS
80	FIELD VERIFY	FIELD VERIFY	3/C - 12	PCB	CNTRL RM RCPT CKT5	RECONNECT EXISTING CONDUCTORS
81	FIELD VERIFY	FIELD VERIFY	3/C - 12	PCB	CNTRL RM RCPT CKT6	RECONNECT EXISTING CONDUCTORS
82	FIELD VERIFY	FIELD VERIFY	3/C - 12	PCB	PERIPH RM RCPT CKT1	RECONNECT EXISTING CONDUCTORS
83	FIELD VERIFY	FIELD VERIFY	3/C - 12	PCB	PERIPH RM RCPT CKT2	RECONNECT EXISTING CONDUCTORS
84	FIELD VERIFY	FIELD VERIFY	3/C - 12	PCB	PERIPH RM RCPT CKT3	RECONNECT EXISTING CONDUCTORS
85	FIELD VERIFY	FIELD VERIFY	3/C - 12	PCB	PERIPH RM RCPT CKT4	RECONNECT EXISTING CONDUCTORS
86	FIELD VERIFY	FIELD VERIFY	3/C - 12	PCB	9TH FLOOR TELECOM RM RCPT	RECONNECT EXISTING CONDUCTORS
87	FIELD VERIFY	FIELD VERIFY	5/C - 10	PCB	24PCB2-PCC	RECONNECT EXISTING CONDUCTORS

NOTES

1. EXISTING PANELS PCA AND PCB EXISTING CONDUCTOR SIZES WERE TAKEN FROM FOR INFORMATION ONLY (FIO) DRAWINGS:
557-420-13692,
577-420-13691,
577-420-13693,
577-420-13659,
557-D-3660.

2. DESTINATIONS OF EXISTING PCA AND PCB CIRCUITS WERE TAKEN FROM FOR INFORMATION ONLY (FIO) DRAWINGS:
557-420-13692,
577-420-13691,
577-420-13693,
577-420-13659,
557-D-3660.

REFERENCE DRAWINGS

ELECTRICAL - SINGLE LINE DIAGRAM	557-D-60172
ELECTRICAL - PANEL SCHEDULES	557-D-60176

BUREAU OF RECLAMATION

ALWAYS THINK SAFETY

U.S. DEPARTMENT OF THE INTERIOR
BUREAU OF RECLAMATION
GLEN CANYON DAM STATION SERVICE DIVISION

SCADA UNINTERRUPTIBLE POWER SUPPLY REPLACEMENT
COLORADO RIVER STORAGE PROJECT - ARIZONA

KASEY NUNES
DESIGNED
KASEY NUNES
DRAWN
DENNIS O'DONNELL
CHECKED
TECH, APPR. ERIC MENDLIN, P.E.
DONNA JOHNSON Digitally signed by DONNA JOHNSON Date: 2025.05.30 07:54:19 -06'00'
APPROVED DONNA JOHNSON, P.E.
PEER REVIEWER
DENVER, CO 2025-04-18

ELECTRICAL INSTALLATION

POWER CABLE AND CONDUIT SCHEDULE

557-D-60177

SHEET 1

LAST SAVED DATE 2025-05-29
LAST SAVED BY DRJOHNSON

CAD SYSTEM AUTODESK AUTOCAD MS (LMS TECH)
CAD FILENAME 557-D-60177.DWG

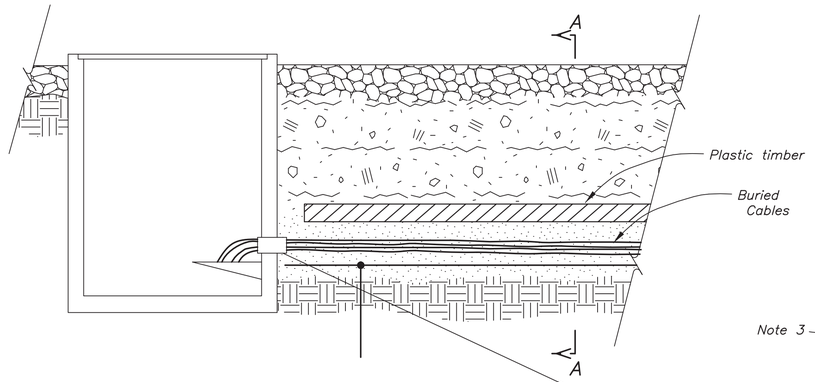

DETAIL A
Termination at Type 'A' & 'B' Cable Trenches

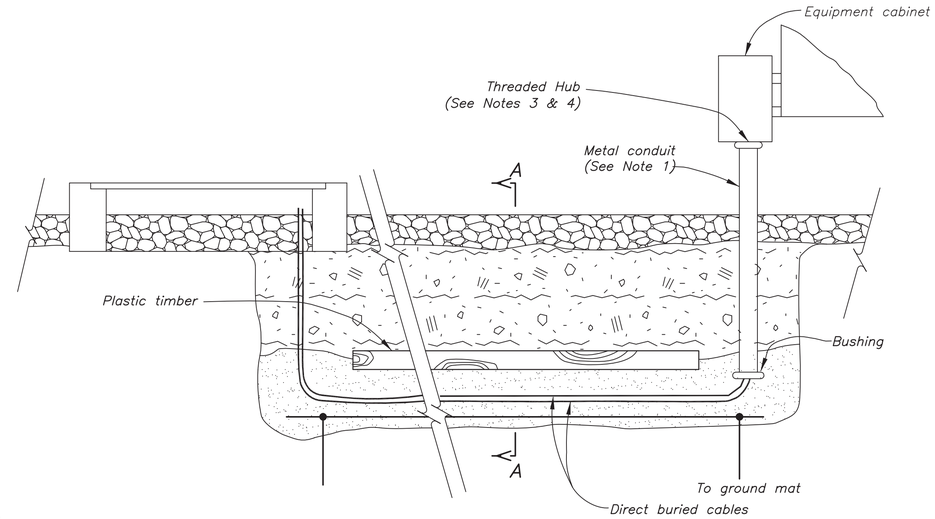

DETAIL B
Termination at Type 'C' Cable Trench

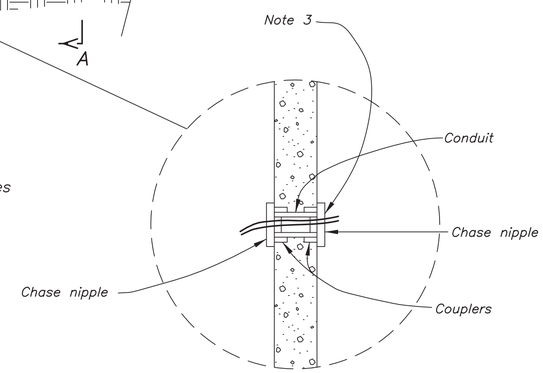

NOTES

1. Portion of conduit 6 inches above and all conduit below finished grade to be PVC–Coated type.
2. A bare copper cable shall be buried parallel with all cable runs at stations where shieled power cables are used. The copper cable size shall be the same as that of the main ground mat.
3. After cables are installed seal entrance with a sealing compound.
4. Crouse–Hinds Type HUB or equal.
5. Metal conduit shall be grounded in accordance with drawing 40–D–4334.
6. Clamping in accordance with drawing 40–D–7094.

REFERENCE DRAWINGS

TYPICAL GROUNDING DETAILS _ _ _ _ _ _ _ _ _ _ _ 40–D–4334
CABLE TRENCH – TYPES "A" & "B" – OUTLINE AND REINFORCEMENT _ _ _ _ _ _ _ _ _ _ _ _ _ 40–D–4632
CABLE TRENCH – TYPE "C" – OUTLINE AND REINFORCEMENT _ _ _ _ _ _ _ _ _ _ _ _ _ 40–D–5350
CONDUIT CLAMP AND SUPPORTS – TYPICAL DETAILS _ _ 40–D–7094

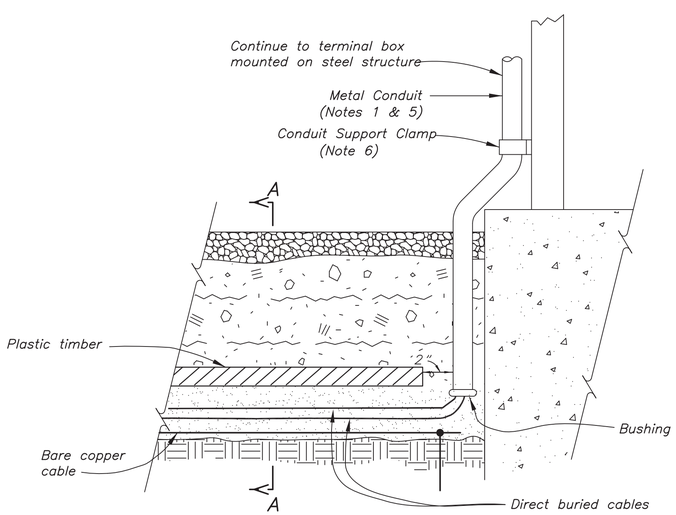

DETAIL C
Termination at Conduit Risers to Equipment.

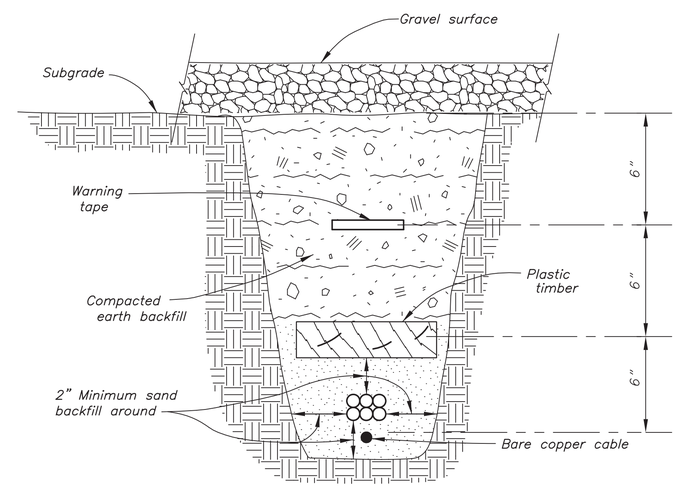

SECTION A–A

NOT TO SCALE

REV. NO		
4	2008–03–10 D – T. L. W.	ADDED WARNING TAPE, EXTENDED CONDUIT RISER DEPTHS, OTHER MINOR REVISIONS. (–68430: D.R.C.)
3	2006–01–13 D – L. G., P.E.	REVISED TITLE BLOCK AND NOTE 1, ADDED NOTES 4 – 6, OTHER MINOR REVISIONS. (D–8440: D.R.C.)
	3 – 27 – 00 D – L.G.	REDRAWN IN AUTOCAD 14.
	10 – 28 – 92 D – L. G.	REVISED TIMBER PROTECTION.

ALWAYS THINK SAFETY

UNITED STATES
DEPARTMENT OF THE INTERIOR
BUREAU OF RECLAMATION

STANDARD DESIGNS

SWITCHYARDS AND SUBSTATIONS

ELECTRICAL INSTALLATION

BURIED INSULATED CABLES
TYPICAL DETAILS

DESIGNED _ _ W. J. C. _ _ _ _ _ _ SUBMITTED _ _ _ M. H. KIGHT _ _ _ _
DRAWN _ _ _ J. M. FIELDS _ _ _ _ RECOMMENDED _ _ K. B. KEENER _ _ _
CHECKED _ _ K. T. D. – D. O. M. _ _ APPROVED _ _ GRANT BLOODGOOD _ _ _
ASSOC. CHIEF ENGINEER

DENVER, COLORADO MAY 6, 1955
SHEET 1 OF 1

40–D–5370

CAD SYSTEM AutoCAD Rel. 16.2s
CAD FILENAME 40–D–5370 REV4.DWG
DATE/TIME PLOTTED MARCH 11, 2008 12:54
PLOTTED BY DCRAWFORD

SAMPLE NAMEPLATES

STRAINER DRAIN

EXTENDED TYPE

STRAINER
DRAIN

COMPACT TYPE

FIRE PROTECTION
WATER SUPPLY
CAUTION
2 1/2" OUTLET FOR FIRE
DEPARTMENT USE ONLY

INSCRIPTION AND CLOSE RANGE
INFORMATIONAL LETTERING

GOTHIC LETTERING CHART

1/4"
NORMAL (Avg. width .271")
ABCDEFGHIJKLMN
ABCDEFGHIJKLMNOP
CONDENSED (Avg. width .234")

3/16"
NORMAL (Avg. width .203")
ABCDEFGHIJKLMNOPQR
ABCDEFGHIJKLMNOPQRSTU
CONDENSED (Avg. width .175")

5/32"
NORMAL (Avg. width .163")
ABCDEFGHIJKLMNOPQRSTUV
ABCDEFGHIJKLMNOPQRSTUVWXYZ
CONDENSED (Avg. width .140")

1/8"
NORMAL (Avg. width .135")
ABCDEFGHIJKLMNOPQRSTUVWXYZ
ABCDEFGHIJKLMNOPQRSTUVWXYZ
CONDENSED (Avg. width .116")

3/32"
NORMAL (Avg. width .103")
ABCDEFGHIJKLMNOPQRSTUVWXYZ
ABCDEFGHIJKLMNOPQRSTUVWXYZ
CONDENSED (Avg. width .086")

*Average widths listed include spacing between letters.

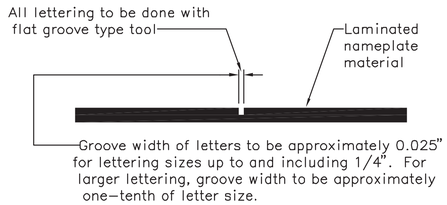

LETTERING DETAIL

SIZES AND LETTER SPACING OF NAMEPLATES

FOR DIMENSIONS SEE TABLES 1 & 2

TABLE 1
WIDTH

TABLE FOR ALL LETTERING THE SAME SIZE

GOTHIC LETTER SIZE	NO. OF LINES 1 W	1 B	2 W	2 S	2 B	3 W	3 S	3 B
1/4	1.00	.375	1.25	.15	.30	1.75	.15	.35
3/16	.75	.28	1.00	.11	.26	1.25	.11	.23
5/32	.50	.17	.75	.08	.18	1.00	.09	.18
1/8	.50	.19	.75	.08	.21	1.00	.08	.23
3/32	.50	.20	.50	.07	.12	.75	.08	.15

Dim. in inches

For other lettering sizes, more than three lines, or various size lettering on same nameplate, arrange width as follows:

Space(S)=Average of letter sizes on each side of space x 0.6.

Border(B)=Largest lettering size on name-plate x 1.2 + half of odd amounts to give total width(W) to even 1/4".

TABLE 3
STANDARD NAMEPLATES
FOR ELECTRICAL EQUIPMENT ONLY

NAMEPLATE SIZE NO.	NAMEPLATE DIMENSIONS L	W	B	LETTERING SIZE
1	1 1/8	7/16	1/16	3/32
2	1 1/2	9/16	1/8	3/32
3	1 3/4	5/8	1/8	1/8
4	2 1/4	3/4	1/8	3/16
5	3	1	7/32	3/16
6	4	1 1/4	1/4	1/4
7	6	1 3/4	1/4	1/2

Above nameplates shall be used for electrical equipment unless otherwise specified.

Dim. in inches

TABLE 2
LENGTH

NO. OF LETTERS AND SPACES	LETTERING SIZE ON LONGEST LINE (NORM=NORMAL; COND=CONDENSED) 1/4 NORM	1/4 COND	3/16 NORM	3/16 COND	5/32 NORM	5/32 COND	1/8 NORM	1/8 COND	3/32 NORM	3/32 COND
1	3	3	3	3	3	3	3	3	3	3
2										
3										
4										
5										
6										
7	3 1/2									
8		3 1/2								
9	4		3 1/2							
10		4								
11	4 1/2			3 1/2						
12	5	4 1/2	4		3 1/2					
13										
14	5 1/2	5	4 1/2	4		3 1/2	3 1/2			
15					4					
16	6									
17		5 1/2	5	4 1/2		4		3 1/2		
18	6 1/2				4 1/2		4			
19		6	5 1/2	5						
20	7						4		3 1/2	
21		6 1/2			5	4 1/2		4		
22	7 1/2		6	5 1/2			4 1/2			
23		7								3 1/2
24	8		6 1/2	6	5 1/2	5	5	4 1/2	4	
25	8 1/2	7 1/2								
26										

Dim. in inches

For other lettering sizes or longer nameplates, use the following formula:

L = A(N+n) + 2M (Nameplate length cut to nearest 1/2").

L – Length of nameplate.
A – Average letter width on longest line.
N – Number of letters on longest line.
n – Number of spaces on longest line
M – Margin=Average letter width plus 5/8".

MOUNTING OF NAMEPLATES

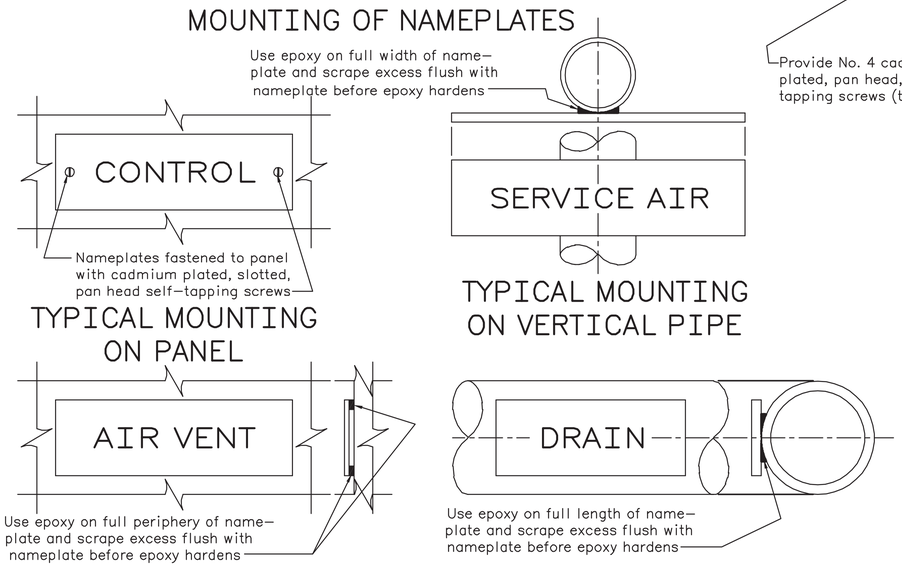

TYPICAL MOUNTING ON PANEL

TYPICAL MOUNTING ON VERTICAL PIPE

TYPICAL MOUNTING ON CONCRETE WALL

TYPICAL MOUNTING ON HORIZONTAL PIPE

DRILLING OF NAMEPLATES

(For panel mounting only)

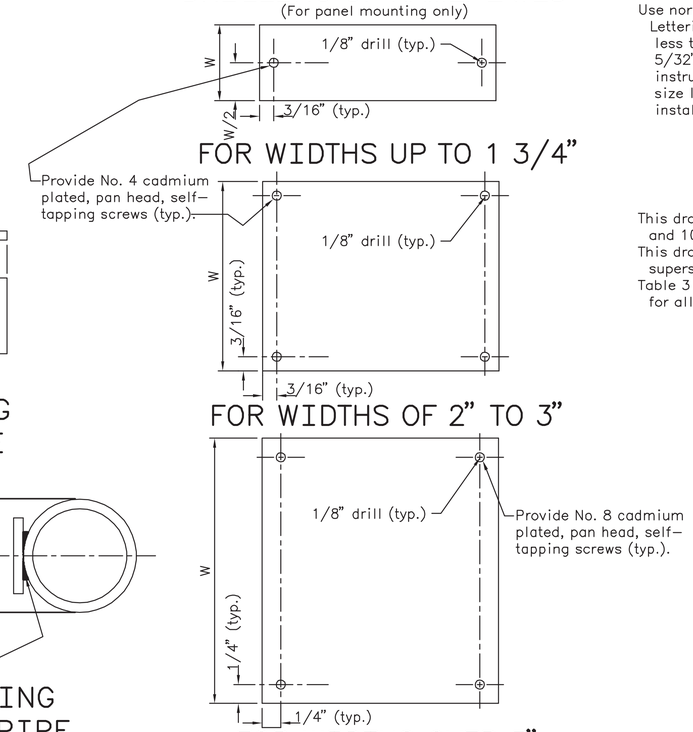

FOR WIDTHS UP TO 1 3/4"

FOR WIDTHS OF 2" TO 3"

FOR WIDTHS OVER 3"

NAMEPLATE MATERIAL

NOTE – All nameplate material shall be suitable for exposure to direct sunlight without detrimental fading.

TYPE A – Material shall be laminated phenolic resin sheets 1/16" or 3/32" thick (as specified) opaque black surface, white layer adjacent to surface layer, buffed or satin finish. Sheets to be cut to size with square edges. Engraving to cut through black surface to white layer. Shall conform to Military Specification MIL – P – 78A and Federal Specification L–P–509a.

TYPE B – Same as Type A except Chinese red surface or equivalent.

TYPE C – Same as Type A except 1/8", 3/16", or 1/4" thick (as specified).

TYPE D – Same as Type A except Chinese red surface or equivalent and 1/8", 3/16", or 1/4" thick (as specified).

NAMEPLATE USES

TYPE A – For panel mounting with self–tapping screws. For concrete wall or other flat mounting to identify valves, equipment, etc. Mount with epoxy cement–indoors or outdoors.

TYPE B – Red nameplates are restricted to uses such as fire protection equipment, warning inscriptions, and emergency devices. Methods of mounting shall be the same as for Type A.

TYPE C – For mounting on non–flat surface with epoxy cement.

TYPE D – Restricted to uses such as fire protection, equipment warning inscriptions, and emergency devices. For mounting on non–flat surfaces with epoxy cement.

LETTERING

Use normal or condensed letter types shown on the Gothic Lettering Chart. The normal size of lettering shall be not less than 3/16" high (1/4" preferred), except that 5/32" and smaller may be used for information and instructions that may be read at close range. Larger size lettering may be specified for out–of–doors installations or where necessary.

NOTES

This drawing supersedes Drawings No. 40–D–5173, 106–D–341, and 106–D–342.

This drawing and Drawings No. 40–D–6124, –6130, and –6187 supersede Drawing No. 40–D–2567.

Table 3 for ELECTRICAL EQUIPMENT ONLY, Tables 1 and 2 for all other equipment.

10 – 13 – 00 D – L.G.	Redrawn in AutoCAD
12 – 11 – 79 D – L.H.	Redrawn
11 – 6 – 70 D – D.A.W.	Add Table 3 and Note

ALWAYS THINK SAFETY

UNITED STATES
DEPARTMENT OF THE INTERIOR
BUREAU OF RECLAMATION

STANDARD DESIGNS

STANDARD NAMEPLATES

DESIGNED D.A.W. TECHNICAL APPROVAL C.G.Bates
DRAWN J.M.F. SUBMITTED Jack W. Hilf
CHECKED D.M.B.–S.K.K.–E.M.J. APPROVED B.P.Bellport
CHIEF ENGINEER

CADD SYSTEM	CADD FILENAME	DATE AND TIME PLOTTED
AutoCAD Release 12_c2-a	4006324.DWG	NOVEMBER 29, 1994 12:28
DENVER, COLORADO	MAY 1970	40–D–6234

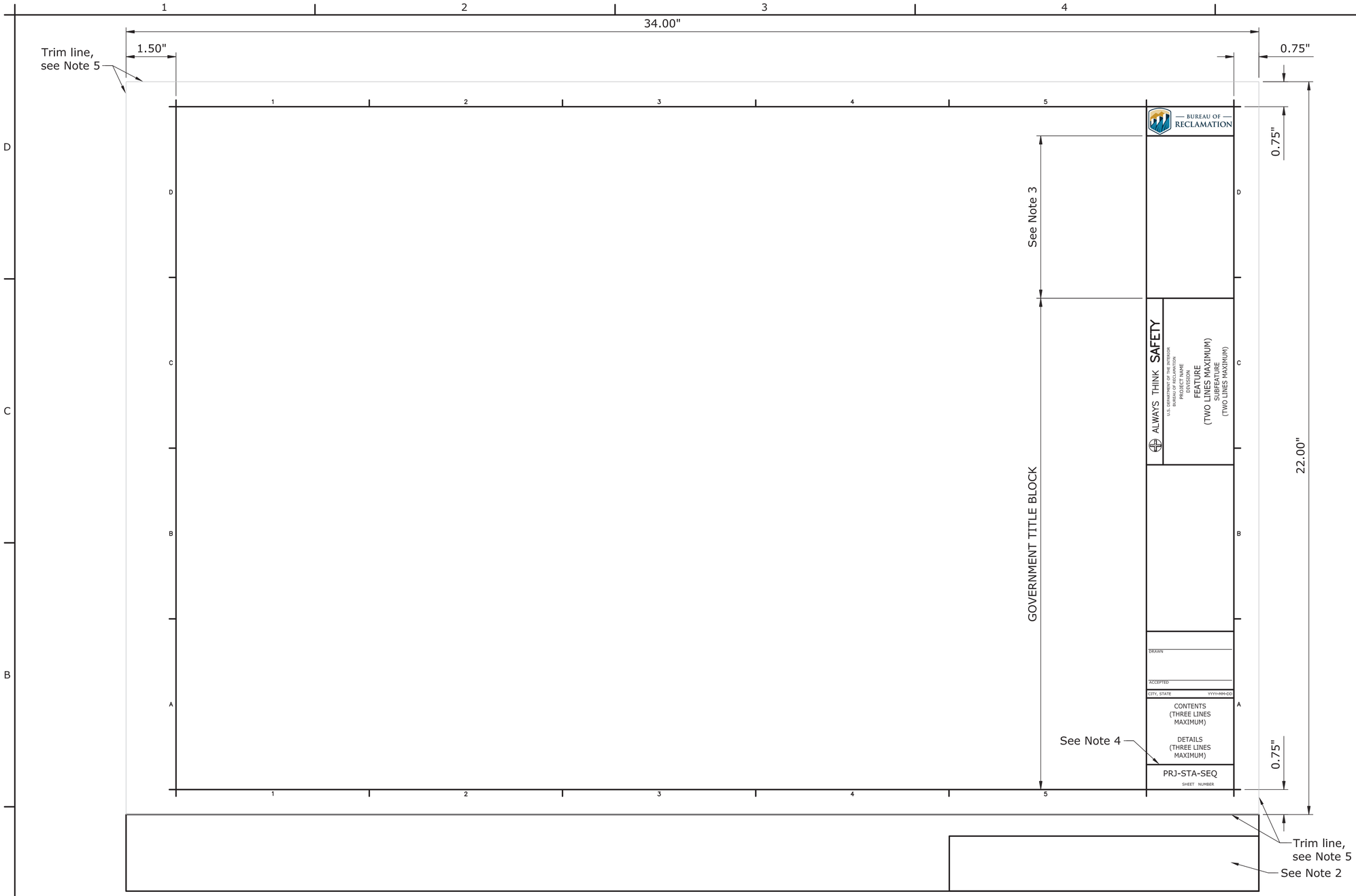

ALWAYS THINK SAFETY

U.S. DEPARTMENT OF THE INTERIOR
BUREAU OF RECLAMATION
YAKIMA PROJECT
KENNEWICK DIVISION

CHANDLER PUMPING PLANT

SWITCHYARD - STEEL STRUCTURES

SAMPLE TITLE

DRAWING BORDER

MANUFACTURER OR CONTRACTOR
DRAWN
ACCEPTED
TITLE

SAMPLE SIGNATURE LINES

REFERENCE

1. Information Management Handbook (IMH - 2020), Chapter 2, Section 9.A.4 - "Sheet Border" and Figures G2, G3, and G4.

NOTES

1. Government will provide contractor with an electronic AutoCAD template to be used by manufacturer for submittal of manufacturer's/contractors drawing in Government format.
2. The manufacturer's title block and drawing revisions as a result of the submittal process, may be located anywhere outside of the trim lines. The location shown on this drawing is the Government's preferred area.
3. The manufacturer shall show the Government solicitation/specification number, the manufacturer's name, drawing and sheet number in this area.
4. Government drawing number(s) will be issued at the end of the submittal process and drawing will be entered into the Government's electronic drawing system by the Government.
5. Trim lines shall be shown on all submitted drawings.

BUREAU OF RECLAMATION

ALWAYS THINK SAFETY

U.S. DEPARTMENT OF THE INTERIOR
BUREAU OF RECLAMATION
STANDARD DRAWINGS

STANDARD AND TYPICAL DESIGNS

GOVERNMENT DRAWING FORMAT

REV NO			
3	2023-04-20 Barthel, Rodney J P.E.	D	UPDATED DRAWING TO CURRENT DRAWING RECORDS SYSTEM. MINOR REVISIONS.
2	2015-03-25 Barthel, Rodney J P.E.	D	UPDATED TITLE BLOCK AND SIGNATURE LINES.
1	2014-12-17 E. Mendlin	D	UPDATED TITLE BLOCK AND SIGNATURE LINES.

S. NITTA
DESIGNED
S. NITTA
DRAWN
D. CRAWFORD
CHECKED
R. BARTHEL, P.E.
TECH. APPR.
R.W. LAFOND, P.E.
APPROVED
ADMIN APPROVAL -

DENVER, CO

DRAWING BORDER, SAMPLE TITLE BLOCK, AND SIGNATURE LINES

40-D-7102

SHEET 1

BOX TERMINATION

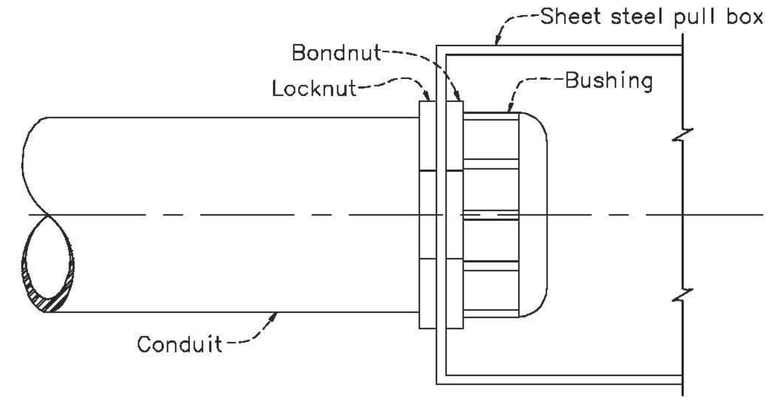

DETAIL "C"

TERMINATING METAL CONDUIT IN SHEET STEEL PULL BOXES

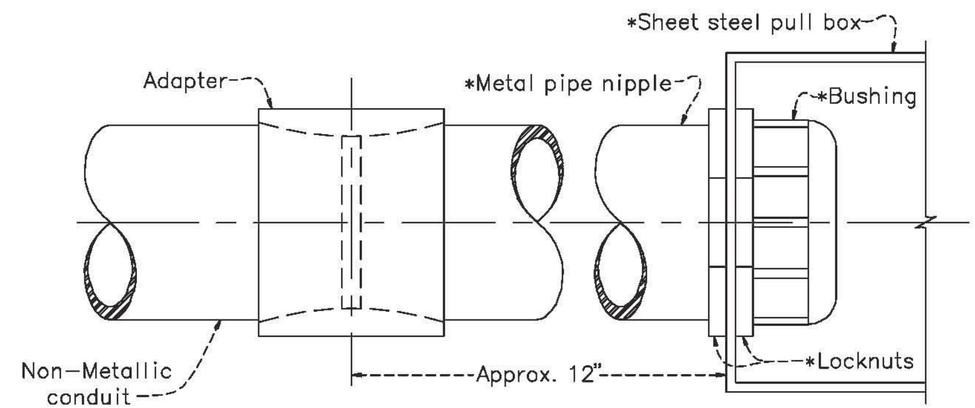

DETAIL "D"

TERMINATING NON–METALLIC CONDUIT IN SHEET STEEL PULL BOXES

*Use aluminum or brass and slot steel box between knockouts for single phase.

ALWAYS THINK SAFETY

FORMERLY X–D–1523–7

REV. 3–25–46	REV. 4–1–42	DEPARTMENT OF THE INTERIOR BUREAU OF RECLAMATION DENVER OFFICE ELECTRICAL STANDARDS
		DENVER, COLO. 6–14–38 — 104–D–254

Released

MISCELLANEOUS DESIGNATIONS

ALT _____ Alternator
A _____ Suffix designation for auxilliary control circuit
ASC _____ Adjustable speed controller
BFV _____ Butterfly valve
C or CAP _____ Capacitor
CB_____ Circuit breaker
CLF _____ Current limiting fuse
CNT _____ Counter
DV_____ Discharge valve
EXC _____ Exciter
FU_____ Fuse
GFCI _____ Ground fault circuit interrupter
GRD _____ Ground
GRS _____ Galvanized rigid steel conduit
GV_____ Gate or guard valve
HR_____ Hand reset (Use as suffix)
I _____ Input
IL_____ Indicating lamp, add prefix for color
IMC _____ Intermediate steel conduit
MCE _____ Motor control equipment (2500 – 5000 volts)
M _____ Motor
MCC _____ Motor control center (600 – volts and lower)
NP_____ Nameplate
NC_____ Normally closed
NO_____ Normally opened
NSPB _____ Nonsegregated phase bus
O _____ Output
PB _____ Pushbutton (Momentary contact type)
PBM _____ Pushbutton (Maintaining contact type)
PC_____ Programmable controller
PR_____ Probe operated relay (Refer to FS for suffix)
REC _____ Rectifier
R/I _____ Resistance to current transducer
SF_____ Service factor
SO_____ Solenoid oiler
SV_____ Solenoid operated valve
TE _____ Time delay on energization
TD _____ Time delay on deenergization
TT _____ Thermal switch
V/I _____ Voltage to current transducer
VLV _____ Valve
WL _____ Water level contact on telemeter receiver (Refer to FS for suffix)

WRM_____ Wound rotor motor
X,Y,X _____ Suffix for auxiliary relay, switch, or contactor (ALX,CSX,FLX, ect.)

–1,–2,–3, etc._____ Suffix for unit number for pumping units, gates, valves, ect.

1,2,3, etc. _____ Suffix for electrical device numbering, such as TR1, TR2, ect.

* _____ Estimated rating

RELAY DESIGNATIONS

AL_____ Alarm relay
BG_____ Bearing temperature relay
CR_____ Control relay
FL _____ Field loss relay
FR_____ Field application relay
GP_____ Ground protective relay
IS_____ Incomplete sequence relay
LO_____ Lockout relay
OC_____ Overcurrent relay
OL_____ Overload relay
OV_____ Overvoltage relay
PO_____ Pullout (Loss of synchronism relay)
RC_____ Remote control relay
RSR _____ Remote sensing relay
SC_____ Squirrel cage (damper winding(relay
SR_____ Shift register
TR_____ Time delay relay
UF_____ Under frequency relay
UV–OPR _____ Undervoltage single and reverse phase relay
WT_____ Winding temperature relay

CONTACTOR DESIGNATIONS

FC_____ Field contactor
LC_____ Lighting contactor
M _____ Main contactor
MA_____ Air compressor motor contactor
MF_____ Vent fan motor contactor
MG* _____ Gate motor contactor
MO* _____ Oil pump motor contactor
MV* _____ Valve motor contactor
*Use suffix as application
–C Closing function
–L Lowering function
–O Opening function
–R Rasing function
S _____ Starting contractor
1S_____ Start contactor } Reduced voltage starting
2S_____ Start transition contactor } Reduced voltage starting
R _____ Run contactor } Reduced voltage starting

SWITCH DESIGNATIONS

CS_____ Control switch
FCD _____ Foreign circuit disconnect switch
FS_____ Float switch (Use suffix letter_ _ C–canal, P–pipe, R–reservoir, S–sump, T–tank)
LS_____ Limit switch
PS_____ Pressure switch
SS_____ Selector switch
TQ_____ Torque switch
TSW _____ Transfer switch

TRANSFORMER DESIGNATIONS

CCT _____ Control circuit transformer
CT_____ Current transformer
PT_____ Potential transformer
T _____ Transformer
TH_____ Transformer oil temperature
TL_____ Transformer oil level
TP_____ Transformer pressure relief
SST _____ Station service transformer

INSTRUMENT AND METER DESIGNATIONS

AM_____ Ammeter
AS_____ Ammeter transfer switch
CNT _____ Start counter
INT _____ Integrating instrument
PF_____ Power–factor meter
PST _____ Phase shifting transformer
RDM _____ Recording demand meter
TM_____ Time meter
V _____ Voltmeter
VAR _____ Varmeter
VARH_____ Varhour meter
VS_____ Voltmeter transfer switch
W _____ Wattmeter
WH_____ Watthour meter
WHD _____ Watthour demand meter
(R) _____ Indicates recording instruments
The asterisk is not part of the symbol.
Replace the asterisk with letter or letters depending on the function of the instrument.

DEVICE SYMBOLS

CS — Control switch
AS — Ammeter transfer switch
VS — Voltmeter tansfer switch
Surge arrester
Capacitor
Reactor
Potential transformer
Current transformer
Power or distribution transformer
3Ø, Wye grounded connection
3Ø, Delta connection
3Ø, Broken delta connection
3Ø, Open delta connection (corner grounded)

Disconnecting switch
Liquid level switch (Normally open)
Vacuum and pressure switch (Normally closed)
Temperature actuated switch (Normally open)
Flow actuated switch (Normally open)
Limit switch–direct actuated (Normally open)
Torque switch (Normally closed)
3–Position selector switch
Air circuit breaker thermomagetic trip 1 Frame size, 2 Inverse time trip, 3 Instantaneous trip
1 Rectifier, 2 Reactor, 3 Inverter
Silicon controlled rectifier (Solid state DC switch)
Air circuit breaker, electrically operated
Air circuit breaker, withdraw type
Contactor with thermal trip
Contactor with magnetic trip
Contactor with CT and magnetic trip relay
Contactor (Normally open)
Contactor (Normally closed)
Auxiliary contactor (Closes when main device is closed)
Auxiliary contactor (Open when main device is closed)
Relay contact number
Relay coil, contactor coil
Horn–gap disconnectiong switch
Fuse
Fuse, current limiting type
Instrument shunt
Resistor
Rheostat, or potentiometer
Separable connector
Indicating lamp W–white, R–red, G–green, Y–yellow, A–amber, B–blue
Battery
Bell
Horn
Pushbutton (Normally open, momentary contact)
Pushbutton (Normally closed, momentary contact)
Maintained contact pushbutton

Probe, water level detector
Load interrupter switch
Motor
Triac (Solid state AC switch)
Wound rotor motor

WIRING SYMBOLS

Ground connection
Interconnection between separately owned systems
Duplex single–gang plug receptacle
Single weatherproof plug receptacle
Watertight three–phase power receptacle
Single pole switch
Three way switch
Luminaire, letter indicates type, number indicates wattage
Represents connection from external equipment. Does not necessarily represent a terminal block.
High voltage cable termination
Represents connection from external equipment via–multi–pair control (signal) cable.

GROUND SYMBOLS

Cable exposed
Cable embedded in concrete
Cable concealed but not embedded
Cable buried directly in earth
Ground rod
Welded or bolted connection
Cable riser
Indicates ground when required for clarity
Ground connector per 40–D–4334, Fig. 4
Ground ring

CONDUIT SYMBOLS

Exposed
Embedded in concrete
Concealed but not embedded
Buried directly in earth
Bending toward observer
Bending away from observer
Capped
Pull box or junction box
Designation number
Liquid tight flexible metal conduit
Sealing bushing, conduit to cable

NOTES

1. If designations and symbols other than the ones shown on this drawing used, they shall be shown on the approprate drawing.
2. For additional designations and symbols refer to NEMA Standards Pub, ICS–1970.
3. Contacts in control circuits are shown in the deenergized position. Liquid level switches are shown with liquid container empty. Vaccum and pressure switches are shown at ambient pressure. Temperature switches are shown at ambient temperature.

3 – 24 – 00 D – L.G.	REVISED TITLE BLOCK AND REDRAWN IN AUTOCAD 14.
3 – 11 – 81 D – D.G.	MINOR REVISIONS

ALWAYS THINK SAFETY

UNITED STATES
DEPARTMENT OF THE INTERIOR
BUREAU OF RECLAMATION
STANDARD DESIGNS

PUMPING PLANT
ELECTRICAL INSTALLATIONS
DESIGNATIONS AND SYMBOLS

DESIGNED N.J.B. TECH. APPR. P.L. ANNA
DRAWN D.D. DROULLARD SUBMITTED S.M. DENTON
CHECKED E.M.T. APPROVED M.H. KIGHT CHIEF, ELECTRICAL BRANCH

CADD SYSTEM AutoCAD Rel. 16.0s | CADD FILENAME 757.DWG | DATE AND TIME PLOTTED APRIL 30, 2004 13:14
DENVER, COLORADO FEBRUARY 13, 1962 | 104–D–757

IEEE STANDARD CONTROL & PROTECTION DEVICE FUNCTION NUMBERS

(SEE NOTES 1, 2, AND 3)

01___Master Element
02___Time-Delay Starting or Closing Relay (TDPU)
03___Checking or Interlocking Relay
04___Master Contactor
05___Stopping Device
06___Starting Circuit Breaker
07___Rate-of-Change Relay
08___Control Power Disconnecting Device
09___Reversing Device
10___Unit Sequence Switch
11___ Multifunction Device
12___Overspeed Device
13___Synchronous-speed Device
14___Underspeed Device
15___Speed or Frequency Matching Device
16___Reserved for future application
17___Shunting or Discharge Switch
18___Accelerating or Decelerating Device
19___Starting-to-Running Transition Contactor
20___Electrically Operated Valve
21___Distance Relay
22___Equalizer Circuit Breaker
23___Temperature Control Device
24___Volts Per Hertz Relay
25___Synchronizing or Synchronism-Check Device
26___Apparatus Thermal Device
27___Undervoltage Relay
28___Flame Detector
29___Isolating Contactor
30___Annunciator Relay
31___Separate Excitation Device
32___Directional Power Relay
33___Position Switch
34___Master Sequence Device
35___Brush-Operating or Slip-Ring Short-Circuiting Device
36___Polarity or Polarizing Voltage Device
37___Undercurrent or Underpower Relay
38___Bearing Protective Device
39___Mechanical Condition Monitor
40___Field Relay
41___Field Circuit Breaker
42___Running Circuit Breaker
43___Manual Transfer or Selector Device
44___Unit Sequence Starting Relay
45___Atmospheric Condition Monitor
46___Reverse-Phase or Phase-Balance Current Relay
47___Phase-Sequence Voltage Relay
48___Incomplete Sequence Relay
49___Machine or Transformer Thermal Relay
50___Instantaneous Overcurrent or Rate-of-Rise Relay
51___AC Time Overcurrent Relay
52___AC Circuit Breaker
53___Exciter or DC Generator Relay
54___Turning Gear Engaging Device
55___Power Factor Relay
56___Field Application Relay
57___Short-Circuiting or Grounding Device
58___Rectification Failure Relay
59___Overvoltage Relay
60___Voltage or Current Balance Relay
61___Density Switch or Sensor
62___Time-Delay Stopping or Opening Relay (TDDO)
63___Pressure Switch
64___Ground Detector Relay
65___Governor
66___Notching or Jogging Device
67___AC Directional Overcurrent Relay
68___Blocking Relay
69___Permissive Control Device
70___Rheostat
71___Level Switch
72___DC Circuit Breaker
73___Load-Resistor Contactor
74___Alarm Relay
75___Position Changing Mechanism
76___DC Overcurrent Relay
77___Pulse Transmitter
78___Phase-Angle Measuring or Out-of-Step Protective Relay
79___AC Reclosing Relay
80___Flow Switch
81___Frequency Relay
82___DC Reclosing Relay
83___Automatic Selective Control or Transfer Relay
84___Operating Mechanism
85___Carrier or Pilot-Wire Receiver Relay
86___Lockout Relay
87___Differential Protective Relay
88___Auxiliary Motor or Motor Generator
89___Line Switch
90___Regulating Device
91___Voltage Directional Relay
92___Voltage and Power Directional Relay
93___Field-Changing Contactor
94___Tripping or Trip-Free Relay
95___Reserved for future application
96___Reserved for future application
97___Reserved for future application
98___Creep Detector Device
99___Reserved for future application

FIRST LETTER SUFFIX OF THE DEVICE DESIGNATION

(SEE NOTES 1, 2, AND 3)

A____Governor System (or Actuator Systems--gates)
B____Battery Charging & Monitoring System
C____High-Voltage Cable System
D____Data Acquisition System
E____Excitation System including Transformer and Regulator but not Main Field
F____Fire and CO2 System
G____Main Generator including Auxiliary Systems
G/M___Generator Motor including Auxiliary Systems in Pumped Storage Applications
H____Turbine or Main Pump Including Auxiliary Systems
I____Isolated and Other Power Bus Systems (not High Voltage Cable)
J____Power Circuit Breaker including Auxiliary Systems
K____Power Transformer including Auxiliary Systems
L____Annunciator System, Security System
M____Main Pump Motor including Auxiliary Systems and Variable Speed Drive
N____Air (Pneumatic) System
O____Not used
P____Penstock or Discharge Line System
Q____Oil Storage, Handling, Purification System
R____Field Flashing System or Phase Reversal Switch including Auxiliary Systems
S____Station Service Substation System including Engine/Generator System
T____Tone and Transfer Trip System
U____Unit Control Circuit System or Uninterruptible Power Supply System
V____Intake and/or Discharge Valve System
W____Water Systems including Intake/Outlet Works and Plant Water and Sump Systems
X____Defined for systems unique to a facility
Y____Defined for systems unique to a facility
Z____Defined for systems unique to a facility

SECOND AND SUBSEQUENT LETTER SUFFIXES OF THE DEVICE DESIGNATION

(SEE NOTES 1, 2, AND 3)

A___Abnormal, A.C., Acceleration, Admission, Alarm, Amperes, Automatic, Auxiliaries, Phase A, etc.
B___Backup, Bearing, Block, Blower, Booster, Brakes, Bus, Button, Bypass, Phase B, etc.
C___Cable, Carrier, Charger, Check, Chlorination, Close, Collector, Common, Compensator, Compressor, Control, Cooling, Current, Cycle, Cylinder, Phase C, Conveyor, etc.
D___D.C., Deceleration, Delay, Depress, Detector, Dielectric, Differential, Discharge, Disconnect, Discordance, Domestic, Down, Downstream, Draft Tube, Drain, etc.
E___Ejector, Elevator, Emergency, Explosive, etc.
F___Failure, Fan, Fault, Feeder, Field, Filter, Fire, Flame, Flow, Follower, Forward, Frequency, Full, Fumes, Fuse, etc.
G___Gas, Gate, Gating (SCR), Generate, Ground, Guide Bearing, etc.
H___Halon, Hand, Heat, Heaters, High, Hoist, Horn, Hot, Housing, Hydropneumatic Tank, etc.
I___Indication, Initial, Inlet, Input, Instantaneous, Intake, Interface, Interlock, Interrupt, Inverter, Ionization, etc.
J___Jacking, Jet, etc.
K___Key, Transformer
L___Lamps, Left, Level, Lights, Limit, Line, Liquid, Local, Logic, Loss, Louvers, Low, Lower, Lubrication, etc.
M___Main, Malfunction, Manual, Meter, Metering, Motor, etc.
N___Negative, Network, Neutral, Normal, etc.
O___Open, Outlet, Output, etc.
P___Packing Box, Parallel, Parameter, Penstock, Phase, Phaseback, Pilot, Pit, Position, Positive, Potential, Pothead, Power, Pressure, Primary, Protection, Pulse, Pump, Purification, Push, etc.
Q___Oil, etc.
R___Raise, Reactor, Reclose, Record, Rectifier, Reed, Refrigeration, Regulate, Relay, Release, Relief, Remote, Reservoir, Reset, Resistor, Right, Rotation, Rotor, Runner, etc.
S___Seals, Secondary, Selector, Sewage, Shorting, Shutdown, Signal, Skimmer, Sludge, Smoke, Solenoid, Speed, Spiral or Scroll Case, Splice, Stabilizer, Standby, Starting, Stator, Stepping, Storage, Strainer, Suction, Sump, Supply, Switch, Synchronizing, etc.
T___Tank, Temperature, Test, Thermal, Thrust Bearing, Thyratron, Tie, Time, Transducer, Transfer, Transmitter, Trip, Trouble, Trashrake, etc.
U___Unit, Unloader, Unwatering, Up, Upper, Upstream, etc.
V___Valve, Vars, Vibration, Voltage, etc.
W___Water, Watts, Winding, etc.
X___Auxiliary Device, etc.
Y___Auxiliary to Device X, Antipump Relay. etc.
Z___Auxiliary to Device Y

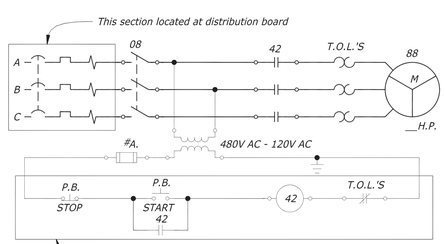

BASIC MOTOR CONTACTOR SCHEMATIC

DEVICE SYMBOLS

(SEE NOTES 5 AND 6)

RELAY COIL, SOLENOID COIL OR CONTACTOR COIL
INDICATING LAMP
INDICATING METER
RECORDING METER
INTEGRATING METER
TRANSFER SWITCH
TRANSDUCER
TELEMETRY
TELEMETRY FOR REMOTE INDICATION
TELEMETRY FOR REMOTE LOGGING AND/OR RECORDING
TELEMETRY FOR REMOTE RECORDING AND/OR LOGGING ASSOCIATED WITH AUTOMATIC GENERATION CONTROL
MICROWAVE, TRANSMITTER-RECEIVER, FOR RELAYING (SEE NOTE 7)
MICROWAVE, TRANSMITTER-RECEIVER, FOR SUPERVISORY CONTROL (SEE NOTE 7)
MICROWAVE, TRANSMITTER-RECEIVER FOR TELEMETERING (SEE NOTE 7)
REMOVABLE LINK
DEVICE TERMINAL POINT (SEE NOTE 11)
CONTACT, NORMALLY OPEN (SEE NOTE 8)
CONTACT, NORMALLY CLOSED (SEE NOTE 8)
PUSHBUTTON, NORMALLY CLOSED
PUSHBUTTON, NORMALLY OPEN
PUSHBUTTON, MAINTAINED
CONTACTOR WITH THERMAL OVERLOAD TRIP ELEMENT
CONTACTOR WITH MAGNETIC TRIP ELEMENT
THERMAL OVERLOAD DEVICE
MAGNETIC OVERLOAD DEVICE
THERMOMAGNETIC OVERLOAD DEVICE
TIME DELAY MAGNETIC OVERLOAD DEVICE
FUSE
FUSE, CURRENT LIMITING TYPE
RESISTOR
RESISTOR, VARIABLE
RESISTOR, TAPPED
VARISTOR
THYRISTOR OR TRIAC
DIODE
ZENER DIODE
SEMI-CONDUCTOR CONTROLLED RECTIFIER (SCR)
RESISTANCE TEMPERATURE DETECTOR (RTD)
INSTRUMENT SHUNT
CAPACITOR

REACTOR
THERMOCOUPLE
LIGHTNING OR SURGE ARRESTER
PROTECTIVE GAP
HORN GAP
CABLE TERMINATION
BELL
HORN
BUZZER
CARRIER FREQUENCY WAVE TRAP
MECHANICAL INTERLOCK
KEY INTERLOCK
ELECTRICAL INTERLOCK
REPRESENTS CONNECTION FROM EXTERNAL EQUIPMENT, DOES NOT NECESSARILY REPRESENT A TERMINAL POINT
SYNCHRO (SELF-SYNCHRONOUS) DEVICE FOR POSITION INDICATION OR CONTROL
THREE-PHASE, 3-WIRE, DELTA
THREE-PHASE, BROKEN DELTA
THREE-PHASE, OPEN DELTA
THREE-PHASE, Y (OR STAR), UNGROUNDED
THREE-PHASE, Y (OR STAR), WITH NEUTRAL BROUGHT OUT AND GROUNDED
THREE-PHASE, ZIG-ZAG, UNGROUNDED
--- SEE NOTE 9 ---
A.C. GENERATOR, MOTOR OR CONDENSER, BASIC SYMBOL
SQUIRREL CAGE INDUCTION MOTOR
SLIP-RING OR WOUND ROTOR INDUCTION MOTOR
SYNCHRONOUS GENERATOR MOTOR OR CONDENSER WITH DIRECT CURRENT FIELD EXCITATION
SYNCHRONOUS CONVERTER
D.C. GENERATOR, MOTOR OR CONDENSER, BASIC SYMBOL
D.C. GENERATOR, MOTOR OR CONDENSER WITH SHUNT AND SERIES FIELD
SPLIT FIELD MOTOR
DIRECT CONNECTED UNITS. USE BASIC AC OR DC GENERATOR OR MOTOR SYMBOLS
USE MANUFACTURERS DIAGRAM
ROTATING AMPLIFIER
PERMANENT MAGNET GENERATOR
SINGLE-PHASE TWO-WINDING TRANSFORMER
POLYPHASE TRANSFORMER
THREE-WINDING TRANSFORMER
AUTOTRANSFORMER OR COMPENSATOR
CONSTANT-CURRENT TRANSFORMER

LOAD-RATIO CONTROL TRANSFORMER WITH TAPS
STEP-VOLTAGE REGULATOR OR LOAD-RATIO CONTROL AUTOTRANSFORMER
CURRENT TRANSFORMER (C.T.), WOUND TYPE
CURRENT TRANSFORMER (C.T.), BUSHING TYPE
POTENTIAL TRANSFORMER (P.T.)
CAPACITOR-BUSHING POTENTIAL DEVICE
CARRIER-COUPLING CAPACITOR POTENTIAL DEVICE
TO CARRIER EQUIPMENT
DISCONNECTING SWITCH, HOOK-STICK-OPERATED
DISCONNECTING SWITCH, MANUALLY-GANG-OPERATED
AIR-BREAK SWITCH, HORN GAP, MANUALLY-GANG-OPERATED
DISCONNECTING SWITCH, MOTOR-OPERATED
INTERRUPTER SWITCH
MANUALLY OPENED, ELECTRICALLY TRIPPED GROUNDING SWITCH
FUSED DISCONNECT SWITCH
POWER CIRCUIT BREAKER
POWER CIRCUIT BREAKER, DRAWOUT TYPE
AIR CIRCUIT BREAKER
AIR CIRCUIT BREAKER, DRAWOUT TYPE
AIR CIRCUIT BREAKER WITH ELECTRICAL TRIP
3-POLE CIRCUIT BREAKER WITH THERMAL-OVERLOAD DEVICE OR INVERSE-TIME-TRIP ELEMENT IN ALL 3 POLES
3-POLE CIRCUIT BREAKER WITH MAGNETIC-OVERLOAD DEVICE OR INSTANTANEOUS-TRIP ELEMENT IN ALL 3 POLES

NOTES

1. Select the most appropriate ANSI device function number which identifies the device used by function and the most appropriate suffix letters which further identify the device by system, subsystem, quantity or condition monitored or controlled.

Examples: 127UC....Unit 1 Unit Control Bus Undervoltage Relay
251EF....Unit 2 Exciter Field Time Delay Overcurrent Relay
71WSH....Plant Sump High Water Level Switch

2. Device numbers 1 through 99 are used for the overall plant and switchyard operation. Device numbers 101 through 199, 201 through 299, 301 through 399, etc. are used for Units 1, 2, 3, etc. Device numbers prefixed by letters RE indicates devices controlled by a supervisory system.

3. No device designation shall be duplicated in the plant or switchyard. When two or more devices perform exactly the same function, the designations will be followed by a number, starting at number 1, to differentiate between the devices.

Examples: 127UCX1, 2.....Auxiliary Relays to Device 127UC
71WSHX1, 2, 3...Auxiliary Relays to Device 71WSH
104UC1, 2.....Unit 1 Master Control Starting Relays

4. All schematic diagrams shall have an explanation list for devices shown on that diagram. This explanation list shall consist of a device designation with a concise description for each device and be located above the title block (e.g. See the examples in Notes 1 and 3 above).

5. This list of device symbols shows the preferred symbol to be used on Bureau of Reclamation single-line and schematic diagrams.

6. The following symbols are not part of the device symbols they are shown with, always replace these symbols by the following:

*....Show device function numbers and letter suffixes within circle.

▽....Show color of lamp by the following: A-Amber, B-Blue, C-Clear, G-Green, O-Orange, R-Red, W-White.

■....Substitute symbol from the following list:

A - Ammeter	PH - Phase Meter
AH - Ampere-hour Meter	PI - Position Indication
CMA - Contact-making Ammeter	RF - Reactive Factor Meter
CMC - Contact-making Clock	RPM - Speed Indicator
CMV - Contact-making Voltmeter	SY - Synchroscope
DM - Demand Meter	T - Temperature Meter
ETM - Elapsed Time Meter	TS - Time Switch
F - Frequency Meter	V - Voltmeter
G - Galvanometer	VAR - Varmeter
GD - Ground Detector	VH - Varhour Meter
OHM - Ohmmeter	W - Watt Meter
OSC - Oscillograph	WH - Watthour Meter
PF - Power Factor Meter	WHDM - Watthour-demand Meter

Use "R" in front of letters for a recording type meter.

□....Show location to which data or information is being telemetered.

▬....Show device function numbers and letter suffixes.

⬭....Show a descriptive note, letter, abbreviation or word to indicate when the contact opens or closes. For latching relays, selector or control switches, use the normally open contact with a letter or word indicating when the contact closes. For time delay relays use TDC or TDO for contacts. All other relay contacts do not require any descriptive note.

△....Show TR for torque-synchro receiver or TX for torque-synchro transmitter.

┼....Show C, M, or G within symbol. Internal connections for A.C. machines should be shown, e.g. three phase, single phase, etc.

⬡....Show S.T. for shunt trip, R.C.T. for reverse current trip, U.V. for undervoltage trip, etc.

7. Channels are via microwave or leased facilities, not via powerline carriers.

8. These contact symbols apply to the following devices: control, flow, level, limit, position, pressure, speed, and temperature switches; relays; contactors; auxiliary contacts; etc. For selector switches, always use a normally-open contact with the position(s) the contact is closed listed below contact.

9. The symbols shown before this point are used on single-line and schematic diagrams. The symbols shown after this point are used as follows: the left-hand symbols are used on single-line diagrams; the right-hand symbols are used on schematic diagrams.

10. All devices shall be shown in the nonoperated and deenergized positions, e.g. breakers shall be open; latching relays shall be in the reset position; selector switches shall be in the off position; level switches shall be in the empty container state, pressure switches shall be in the ambient pressure state; temperature switches shall be in the ambient temperature state; valves, gates, and doors shall be shown in the closed position; etc.

11. All devices, shown on schematic diagrams, shall be shown with their device terminal points numbered and/or lettered for identification of internals for wiring purposes.

12. Whenever this drawing and drawing number 104-D-757 are both referenced, the designations and symbols shown on this drawing shall take precedence over those shown on 104-D-757.

This drawing supersedes drawings 104-D-200 through 104-D-214.

REV NO		
4	2017-10-24	SHADED IN TOP OVAL FOR NOTE 6. ("SHOW DEVICE FUNCTION NUMBERS...") CLARIFIED NOTE 8 FOR SELECTOR SWITCHES
6-24-2003 D- L.G.	REVISED STANDARDS REFERENCES.	
4-4-00 D- L.G.	REDRAWN IN AUTOCAD.	
6 - 1 - 90 D- J.W.R.	ADDED LIST OF SPERCEDED DRAWINGS, NEW TITLE BLOCK AND DRAWING NUMBER IN UPPER LEFT CORNER.	

ALWAYS THINK SAFETY

UNITED STATES
DEPARTMENT OF THE INTERIOR
BUREAU OF RECLAMATION
STANDARD DESIGNS

MAJOR POWER/PUMPING PLANTS
ELECTRICAL INSTALLATION
DEVICE DESIGNATIONS AND SYMBOLS TO BE USED ON SINGLE-LINE AND SCHEMATIC DIAGRAMS

DESIGNED R.W.M.
DRAWN D.D. DROUILARD
CHECKED P.W.
TECHNICAL APPROVAL J. REIF
SUBMITTED H.H. VANDERPLAATS
APPROVED R.H. AUERBACH
CHIEF, ELECTRICAL BRANCH

CADD SYSTEM AutoCAD Rel. 24.0s
CADD FILENAME 104-D-1150-RD-1 (1).DWG
DATE AND TIME PLOTTED MAY 12, 2025 14:19
DENVER, COLORADO OCTOBER 21,1983
104-D-1150

Released

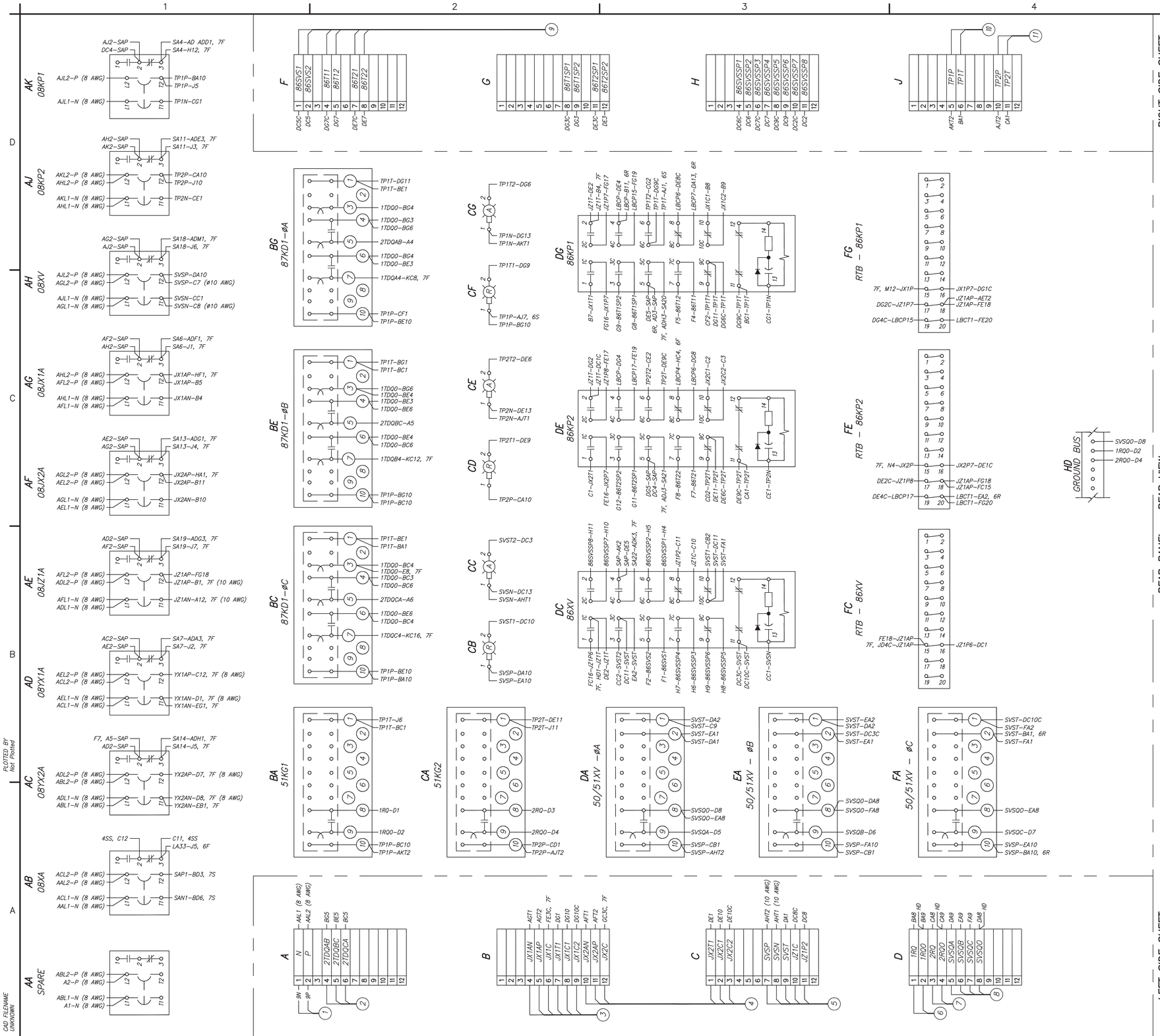

CABLE LIST

CABLE NUMBER	CABLE DESIGNATION	DESTINATION REFERENCE DRAWING	CABLE SIZE
1	9BSA-CSA7R	(6300)	2-1/C-8
2	1JX1A-CSA7R	(6121)	1-5/C-10
3	1CSA7R-JX1A	(6121)	1-9/C-10
4	2CSA7R-JX2A	(6230)	1-9/C-10
5	3CSA7R-JZ1A	(6249)	1-12/C-10
6	1KX1A-CSA7R	(6097)	1-3/C-10
7	1KX2A-CSA7R	(6201)	1-3/C-10
8	1JX1A-CSA7R	(6249)	1-5/C-10
9	4CSA7R-RTU	(6599)	1-12/C-16
10	5CSA7R-KX1A	(6097)	1-5/C-10
11	6CSA7R-KX2A	(6201)	1-5/C-10

EXPLANATION

POINT-TO-POINT WIRING DIAGRAMS

A. Double letters in bold face, such as AA, indicate the location of each device on the wiring diagram except for terminal blocks.

B. Single letters in bold face, such as A, indicate the location of each terminal block on the wiring diagram.

C. A control board is made of many sections which in turn are made of different panels. The sections are designated numerically 1 through "n" with "n" being the last section of the control board. The different panels are designated alphabetically as follows:
1. F – Indicates the front panel.
2. R – Indicates the rear panel.
3. S – Indicates the swing panel when there is only one swing panel per section.
4. FS and RS – Indicate the front and the rear swing panels, respectively, when there are two swing panels per section.
5. SS – Indicates the shipping split terminal block panel/section location.

D. All point-to-point wiring diagrams shall be drawn as follows:
1. All devices shown on the drawing shall represent the relative physical location of the devices.
2. Circuit (wire) designations shall be located next to the device stud (pin).
3. The circuit (wire) termination point shall be placed second from the device stud with a hyphen between the circuit designation and the circuit termination point.
4. The panel destination (number) of the wire shall be placed in the last position from the device stud with a comma between the circuit termination point and the panel destination. All panel wiring within the same panel will not require a panel destination.
5. Therefore, an example of point-to-point wiring is "LBCP4-HC4, 6F" which is located at device, DE, stud 8 on this drawing. The circuit (wire) designation is LBCP4. The circuit (wire) termination point is at device HC, stud (pin) number 4, located on the front panel of section 6.

NOTES

1. All cable shields and spare conductors shall be connected to the ground bus.

2. An internal wiring diagram of each type of protective relay, except lockout relays, shall be shown on a separate drawing. All other devices, including lockout relays, shall have their internal wiring diagrams shown on their external point-to-point wiring diagrams.

3. Do not edit the lineweights or text styles in this drawing. Only use text styles that are used in this drawing.

4. Do not explode or burst the titleblock. Contractor to edit titleblock information for each drawing based on information provided by Government. The titleblock information includes Subfeature, Contents, Details, and Drawing Number. Obtain latest version of Government titleblock and standards prior to commencing with Government Format Drawings.

5. The space below the Reclamation Logo at the top right side of the titleblock is reserved for manufacturer's information. At a minimum, include the following information in the space provided: Manufacturer's name, address, phone number, date, and solicitation number. Use Government provided block.

REFERENCE DRAWINGS

MAIN CONTROL BOARD CSA –
PANEL 6R WIRING DIAGRAM . . . . . XXX-X-XXXXX
MAIN CONTROL BOARD CSA –
PANEL 6F WIRING DIAGRAM . . . . . XXX-X-XXXXX
MAIN CONTROL BOARD CSA –
PANEL 7F WIRING DIAGRAM . . . . . XXX-X-XXXXX
MAIN CONTROL BOARD CSA –
PANEL 7S WIRING DIAGRAM . . . . . XXX-X-XXXXX

RECLAMATION
Managing Water in the West

Manufacturer Information
Name:
Address:
Phone:
Date:
Solicitation Number:
Other Info:

ALWAYS THINK SAFETY

U.S. DEPARTMENT OF THE INTERIOR
BUREAU OF RECLAMATION
DESIGN DATA (ELECTRICAL)
COLORADO

DESIGN DATA TYPICAL
POWERPLANT_PUMPING PLANT
ELECTRICAL INSTALLATION

REV NO	DATE	DRAWN	DESCRIPTION
3	2016-04-01	Mendlin, Eric T P.E.	REVISED TO NEW DRAFTING STANDARDS.
2	2000-04-03	LG	REDRAWN IN AUTOCAD.
1	1991-03-01	JWR	REVISED TO NEW DRAFTING STANDARDS.

DESIGNED: R.W. MC AFEE
DRAWN: M.E. JOJOLA
CHECKED: R.W. MC AFEE
TECH. APPR.: G.D. OSBURN
APPROVED: F.W. COOK, SR
ADMIN APPROVAL – CHIEF, ELECTRICAL BRANCH
D 1990-12-20

MAIN CONTROL BOARD
CSA – PANEL 7R

WIRING DIAGRAM

104-D-1165

SHEET 1

DATE AND TIME PLOTTED Not Plotted
PLOTTED BY Not Plotted

CAD SYSTEM AUTOCAD
CAD FILENAME UNKNOWN

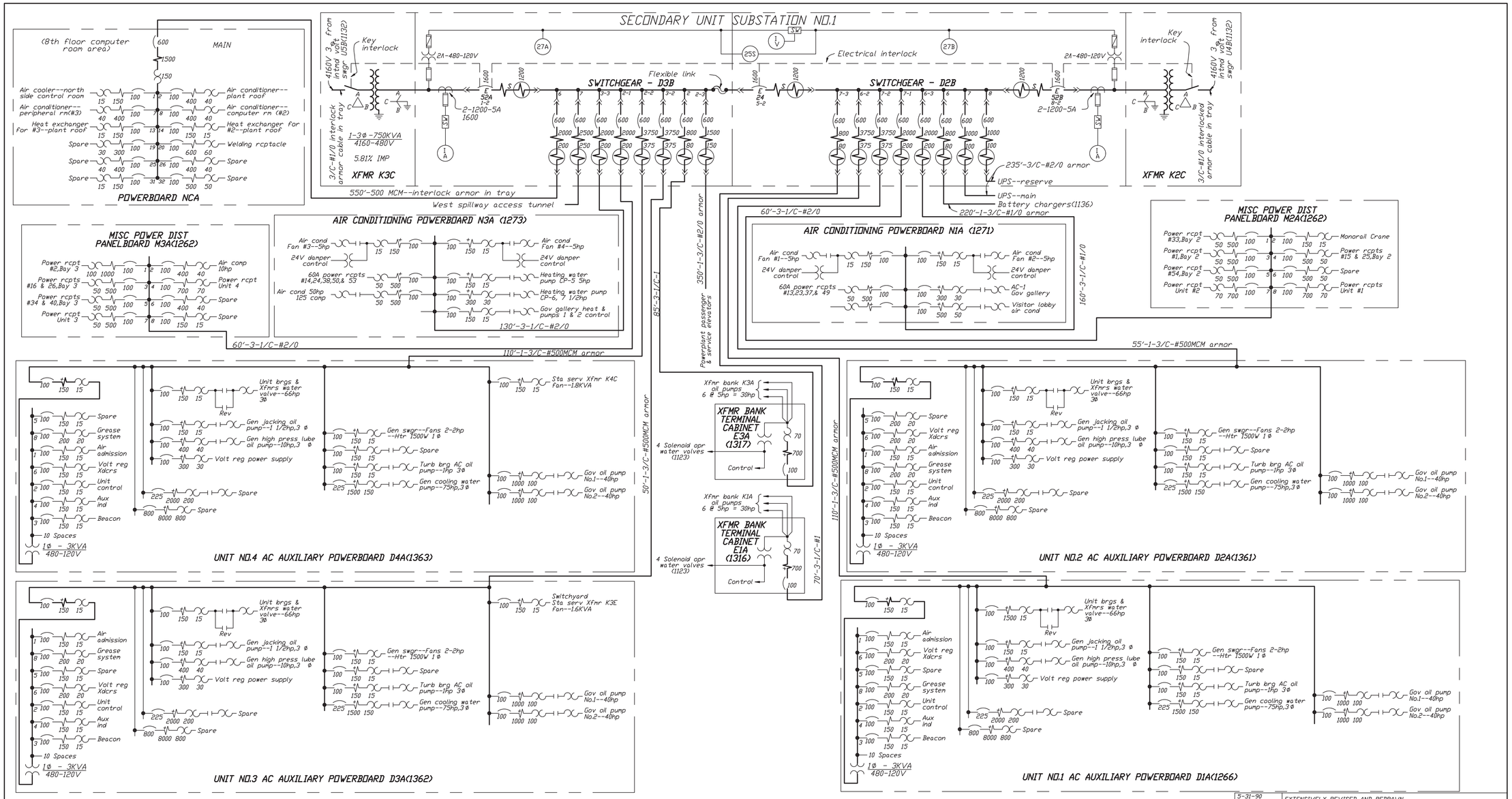

EXPLANATION

- Disconnecting device
- SW Selector switch
- 100 Hand-operated air circuit breaker with frame size
- 1600 Electrically operated air circuit breaker with frame size
- 15 Circuit breaker thermal device with ampere rating
- 150 Circuit breaker instantaneous device
- Instantaneous overcurrent trip device. Selective static(S)5-40 times PU setting Dual Static(D)5-15 times PU setting
- Long time delay overcurrent trip device of the static type with ampere setting

NOTES

1. The three electrically operated supply breakers in switchgear D2B and D3B are electrically interlocked so that all three cannot be in the closed position simultaneously except momentarily when the sources are in synchronism.

2. + Indicates compartments having drawout features.

For Information Only

5-31-90 420 -MM.	EXTENSIVELY REVISED AND REDRAWN
11-27-64 D - W.H.C.	GEN.COOLING WATER DISCHARGE VALVE TO HEATING HEADER WAS REMOVED ON EACH UNIT SINCE THE FEEDER WAS NOT USED.

ALWAYS THINK **SAFETY**

UNITED STATES
DEPARTMENT OF THE INTERIOR
BUREAU OF RECLAMATION
COLORADO RIVER STORAGE PROJECT
MIDDLE RIVER DIV. GLEN CANYON UNIT - ARIZONA-UTAH

GLEN CANYON POWER PLANT

ELECTRICAL INSTALLATION
STA.SERV.440V SECONDARY DISTRIBUTION
UNIT SUB.NO.1(K2C-D2B-D3B-K3C)
SINGLE-LINE DIAGRAM

DESIGNED R.E.M. SUBMITTED S.M. DENTON
DRAWN L.E.W./ RECOMMENDED M.H. KNIGHT
CHECKED H.F.P.-R.S.C.-R.F.H. APPROVED E.V. LINDSETH
CHIEF, ELECTRICAL BRANCH

DENVER, COLORADO DECEMBER 8, 1960 557-D-1133

GLEN CANYON COMPUTER DRAFTING

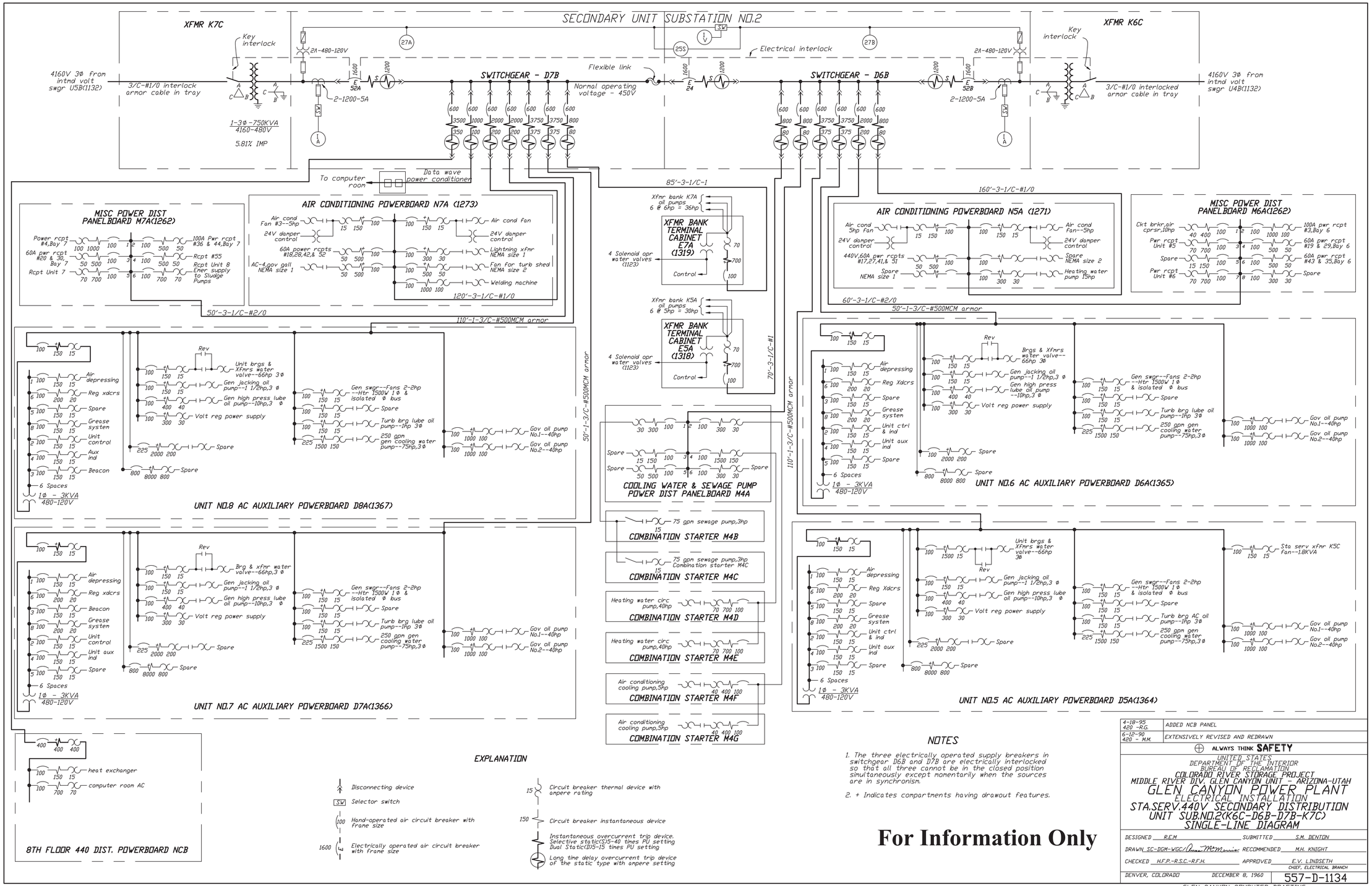
SECONDARY UNIT SUBSTATION NO.2
XFMR K7C
XFMR K6C
Key interlock
2A-480-120V
27A
27B
25S
Electrical interlock
4160V 3Ø from intmd volt swgr U5B(1132)
3/C-#1/0 interlock armor cable in tray
1-3Ø -750KVA 4160-480V
5.81% IMP
2-1200-5A
52A
52B
SWITCHGEAR - D7B
SWITCHGEAR - D6B
Flexible link
Normal operating voltage - 450V
3/C-#1/0 interlocked armor cable in tray
4160V 3Ø from intmd volt swgr U4B(1132)
To computer room
Data wave power conditioner
85'-3-1/C-1
160'-3-1/C-#1/0
120'-3-1/C-#1/0
50'-3-1/C-#2/0
60'-3-1/C-#2/0
110'-1-3/C-#500MCM armor
50'-1-3/C-#500MCM armor
70'-3-1/C-#1
MISC POWER DIST PANELBOARD M7A(1262)
AIR CONDITIONING POWERBOARD N7A (1273)
AIR CONDITIONING POWERBOARD N5A (1271)
MISC POWER DIST PANELBOARD M6A(1262)
XFMR BANK TERMINAL CABINET E7A (1319)
XFMR BANK TERMINAL CABINET E5A (1318)
4 Solenoid opr water valves (1123)
Control
COOLING WATER & SEWAGE PUMP POWER DIST PANELBOARD M4A
UNIT NO.8 AC AUXILIARY POWERBOARD D8A(1367)
UNIT NO.7 AC AUXILIARY POWERBOARD D7A(1366)
UNIT NO.6 AC AUXILIARY POWERBOARD D6A(1365)
UNIT NO.5 AC AUXILIARY POWERBOARD D5A(1364)
COMBINATION STARTER M4B
COMBINATION STARTER M4C
COMBINATION STARTER M4D
COMBINATION STARTER M4E
COMBINATION STARTER M4F
COMBINATION STARTER M4G
8TH FLOOR 440 DIST. POWERBOARD NCB
EXPLANATION
Disconnecting device
Selector switch
Hand-operated air circuit breaker with frame size
Electrically operated air circuit breaker with frame size
Circuit breaker thermal device with ampere rating
Circuit breaker instantaneous device
Instantaneous overcurrent trip device. Selective static(S)5-40 times PU setting Dual Static(D)5-15 times PU setting
Long time delay overcurrent trip device of the static type with ampere setting
NOTES
1. The three electrically operated supply breakers in switchgear D6B and D7B are electrically interlocked so that all three cannot be in the closed position simultaneously except momentarily when the sources are in synchronism.
2. + Indicates compartments having drawout features.
For Information Only
4-18-95 420 -R.G. ADDED NCB PANEL
6-12-90 420 - M.M. EXTENSIVELY REVISED AND REDRAWN
ALWAYS THINK SAFETY
UNITED STATES DEPARTMENT OF THE INTERIOR BUREAU OF RECLAMATION
COLORADO RIVER STORAGE PROJECT
MIDDLE RIVER DIV. GLEN CANYON UNIT - ARIZONA-UTAH
GLEN CANYON POWER PLANT
ELECTRICAL INSTALLATION
STA.SERV.440V SECONDARY DISTRIBUTION
UNIT SUB.NO.2(K6C-D6B-D7B-K7C)
SINGLE-LINE DIAGRAM
DESIGNED R.E.M. SUBMITTED S.M. DENTON
DRAWN SC-DGM-WGC/ RECOMMENDED M.H. KNIGHT
CHECKED H.F.P.-R.S.C.-R.F.H. APPROVED E.V. LINDSETH
CHIEF, ELECTRICAL BRANCH
DENVER, COLORADO DECEMBER 8, 1960
557-D-1134
GLEN CANYON COMPUTER DRAFTING

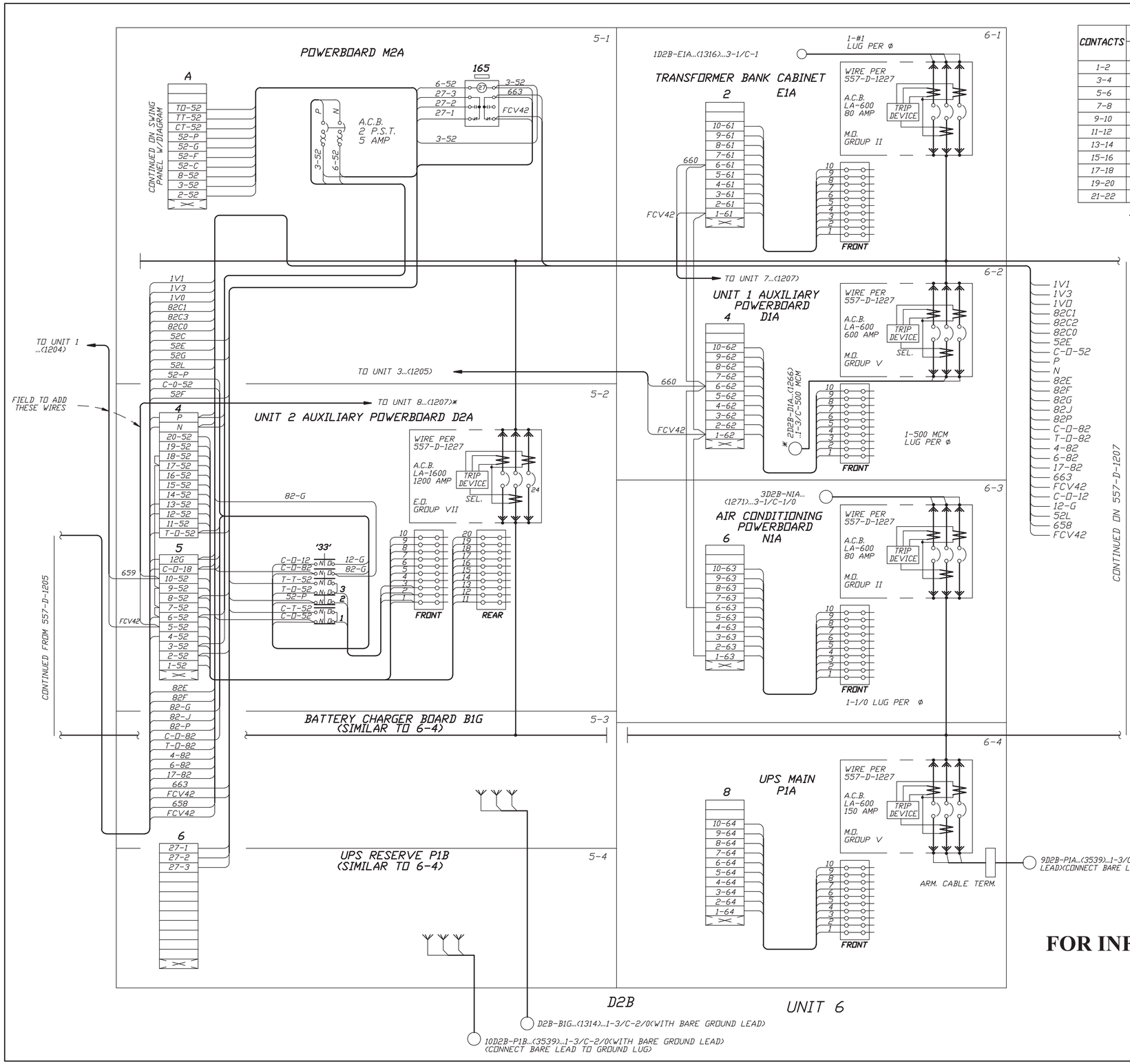

CONTACTS	POSITIONS		
	TRIP	NORM	CLOSE
1-2			X
3-4	X		
5-6			X
7-8	X		
9-10			X
11-12	X		
13-14			X
15-16	X		
17-18		X	
19-20		X	
21-22		X	

DEVICE CS

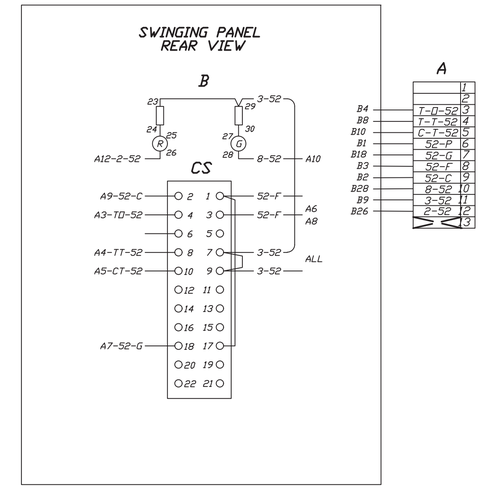

SWINGING PANEL WIRING DIAGRAM COMPT. 5-1

GROUP NO.	MAXIMUM RATED AMPERES	ADJUSTABLE PICK-UP SETTINGS "A"	"B"	"C"	"D"	"E"	BREAKER TYPE
I	80	40	50	60	70	80	LA-600
II	150	75	95	110	130	150	LA-600
III	250	125	155	175	220	250	LA-600, LA-1600
IV	400	200	250	300	350	400	LA-600, LA-1600
V	600	300	375	450	525	600	LA-600, LA-1600
VI	1000	500	625	750	875	1000	LA-1600
VII	1600	800	1000	1200	1400	1600	LA-1600
TRIPS SET AT MIN. UNLESS ORDERED OTHERWISE							
TRIP TYPE D-DUAL STATIC, S-SELECTIVE STATIC							

*..... ARMORED CABLE

REFERENCE DRAWINGS

SCHEMATIC.....557-D-1185
SINGLE-LINE.....557-D-1133

NOTE

'33' CELL SWITCH SHOWN WITH BREAKER IN "OPERATE" POSITION

FOR INFORMATION ONLY

8-30-93 420 -D.B.	CORRECTED CABLE DESIGNATION 2D2B
6-19-89 420 - DB	REVISED FOR SCADA UPS SYSTEM AND REDRAWN

ALWAYS THINK **SAFETY**

UNITED STATES
DEPARTMENT OF THE INTERIOR
BUREAU OF RECLAMATION
COLORADO RIVER STORAGE PROJECT
MIDDLE RIVER DIV. GLEN CANYON UNIT - ARIZONA-UTAH

GLEN CANYON POWER PLANT

ELECTRICAL INSTALLATION

440V. SUBSTATION NO.1--UNITS 5 & 6 WIRING DIAGRAM

DESIGNED MFGR. SUBMITTED H.F. Parr
DRAWN WWM/Dennis McMorris RECOMMENDED R.Y. Nitta
CHECKED HFP APPROVED J.V. Baptist
CHIEF, ELECTRICAL BRANCH

DENVER, COLORADO JUNE 15, 1963 557-D-1206

GLEN CANYON COMPUTER DRAFTING

AC PANELBOARD MCA

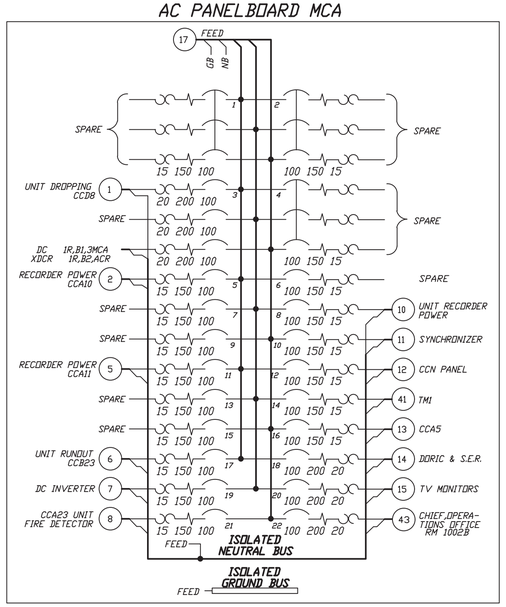

Front View
1F

AC PANELBOARD MCA

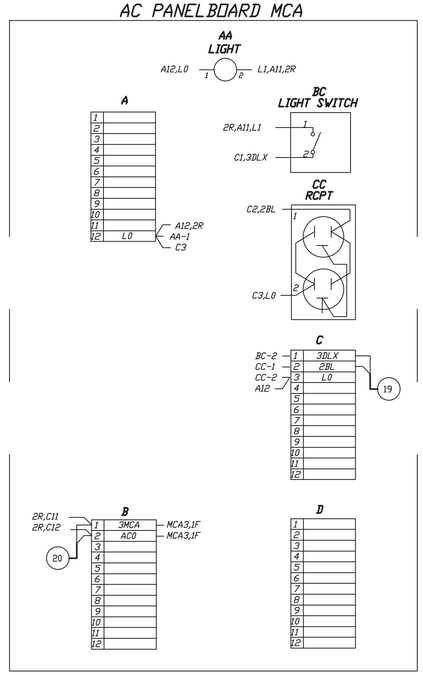

Rear View
1R

DC PANELBOARD BCA

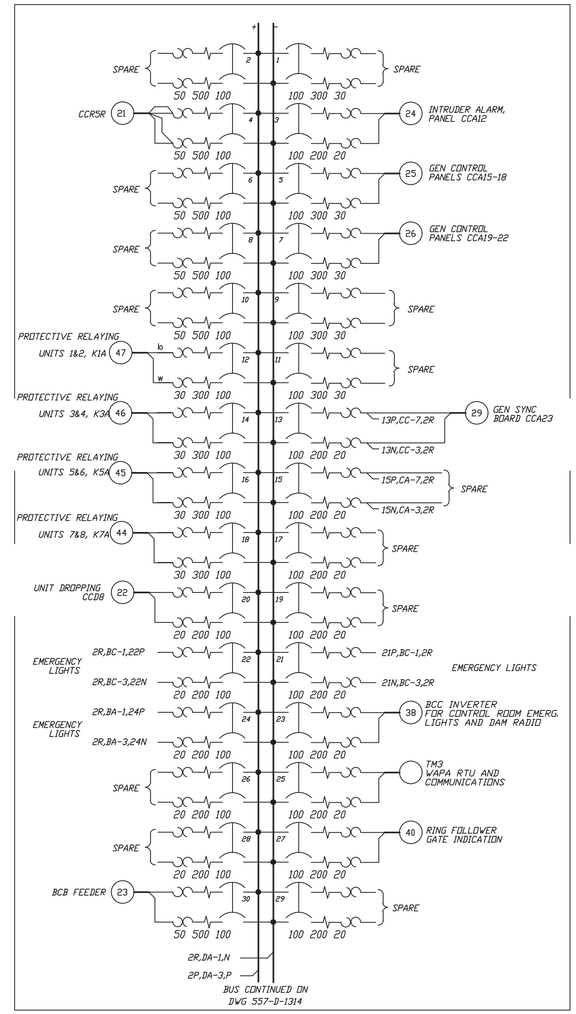

Front View
2F

DC PANELBOARD BCA

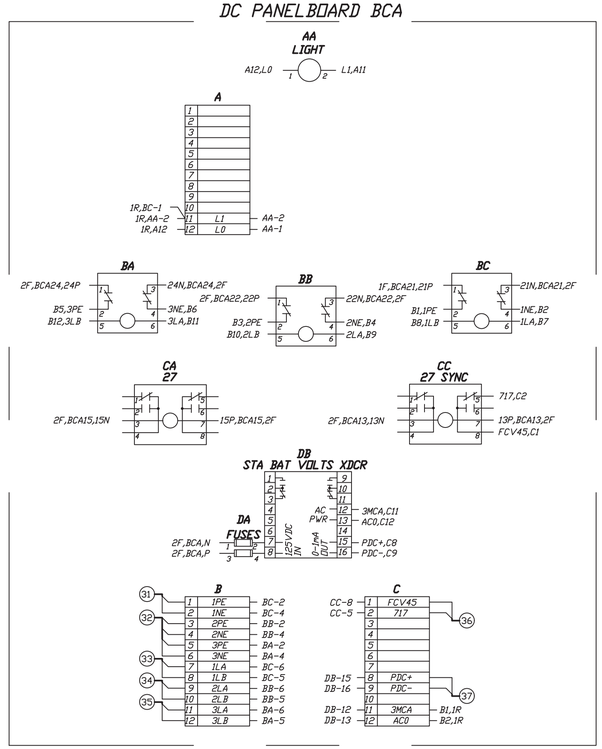

Rear View
2R

1. 34CCD8-MCA...(3560)...1-2/C-12
2. 6MCA-CCA10...(2827)...1-2/C-19/22
5. 4MCA-CCA11...(2828)...1-2/C-19/22
6. 1MCA-CCB23...(3540)...1-2/C-12
7. 19MCA-BCC...(3771)...1-2/C-12
8. 21MCA-CCA23...(2848)...1-2/C-12
10. 5MCA-CCA9...(2826)...1-2/C-19/22
11. 7MCA-CCA23...(2848)...1-2/C-19/22
12. 12MCA-CCN...(~420-1626)...1-3/C-12
13. 10MCA-CCA5...(2822)...1-3/C-19/22
14. 15MCA-CCA10...(2827)...1-2/C-12
15. 2CCB15-MCA...(2860)...1-3/C-12
17. 23PCB2-MCA...(3660)...1-5/C-10
19. 15LCB-MCA...(955)...1-2/C-10
20. 22MCA-CCA13...(2830)...1-2/C-12
21. 4BCA-CCR5R...(3476)...1-4/C-12
22. 35CCD8-BCA...(3560)...1-2/C-12
23. 30BCA-BCB...(3694)...1-4/C-6
24. 8CA-CCA12...(2829)...1-2/C-19/22
25. 7BCA-CCA18...(2838)...1-2/C-6
26. 8BCA-CCA22...(2846)...1-2/C-6
29. 11BCA-CCA23...(2848)...1-2/C-19/22
31. 2BCA...(954)...2-1/C-12
32. 1BCA...(954)...4-1/C-12
33. 8LCE-BCA...(957)...2-1/C-12
34. 9LCE-BCA...(957)...2-1/C-12
35. 3LCC-BCA...(955)...2-1/C-12
36. BCA-CCR3R...(3478)...1-2/C-16
37. 24BCA-TCSS...(3499)...1-2/C-16
38. 23BCA-BCC...(3771)...1-2/C-12
40. BCA-CCA10...(2827)...1-2/C-10
41. 17MI-MCA...1-4/C-12 (FOR WAPA TELEMETER EQUIPMENT)
43. 23MCA-CH/DP...1-3/C-12
44. 18BCA-CCC7F...(3895)...1-3/C-10
45. 16BCA-CCC5F...(3889)...1-3/C-10
46. 14BCA-CCC3F...(3883)...1-3/C-10
47. 12BCA-CCC1F...(3877)...1-3/C-10

NOTES

MCA IS FED FROM UPS SYSTEM WHICH USES ISOLATED NEUTRAL AND GROUND. USE THIS PANEL FOR UPS CIRCUITS ONLY.

REFERENCE DRAWINGS

125 VDC SYSTEM SINGLE LINE...557-D-1136

FOR INFORMATION ONLY

4-7-00 420-R.G.	FIELD REVISIONS
10-16-95 420-R.G.	MINOR REVISIONS

ALWAYS THINK **SAFETY**

UNITED STATES
DEPARTMENT OF THE INTERIOR
BUREAU OF RECLAMATION
COLORADO RIVER STORAGE PROJECT
MIDDLE RIVER DIV. GLEN CANYON UNIT - ARIZONA-UTAH

GLEN CANYON POWER PLANT

ELECTRICAL INSTALLATION

DC DIST BOARD BCA,AC DIST BOARD MCA WIRING DIAGRAM

DESIGNED MFR — SUBMITTED W.H. CLARK
DRAWN A.M. — RECOMMENDED R.F. HIND
CHECKED H.F.P. — APPROVED J.V. BAPTIST, CHIEF, ELECTRICAL BRANCH

DENVER, COLORADO — OCTOBER 29, 1963 — 557-D-2940

GLEN CANYON COMPUTER DRAFTING

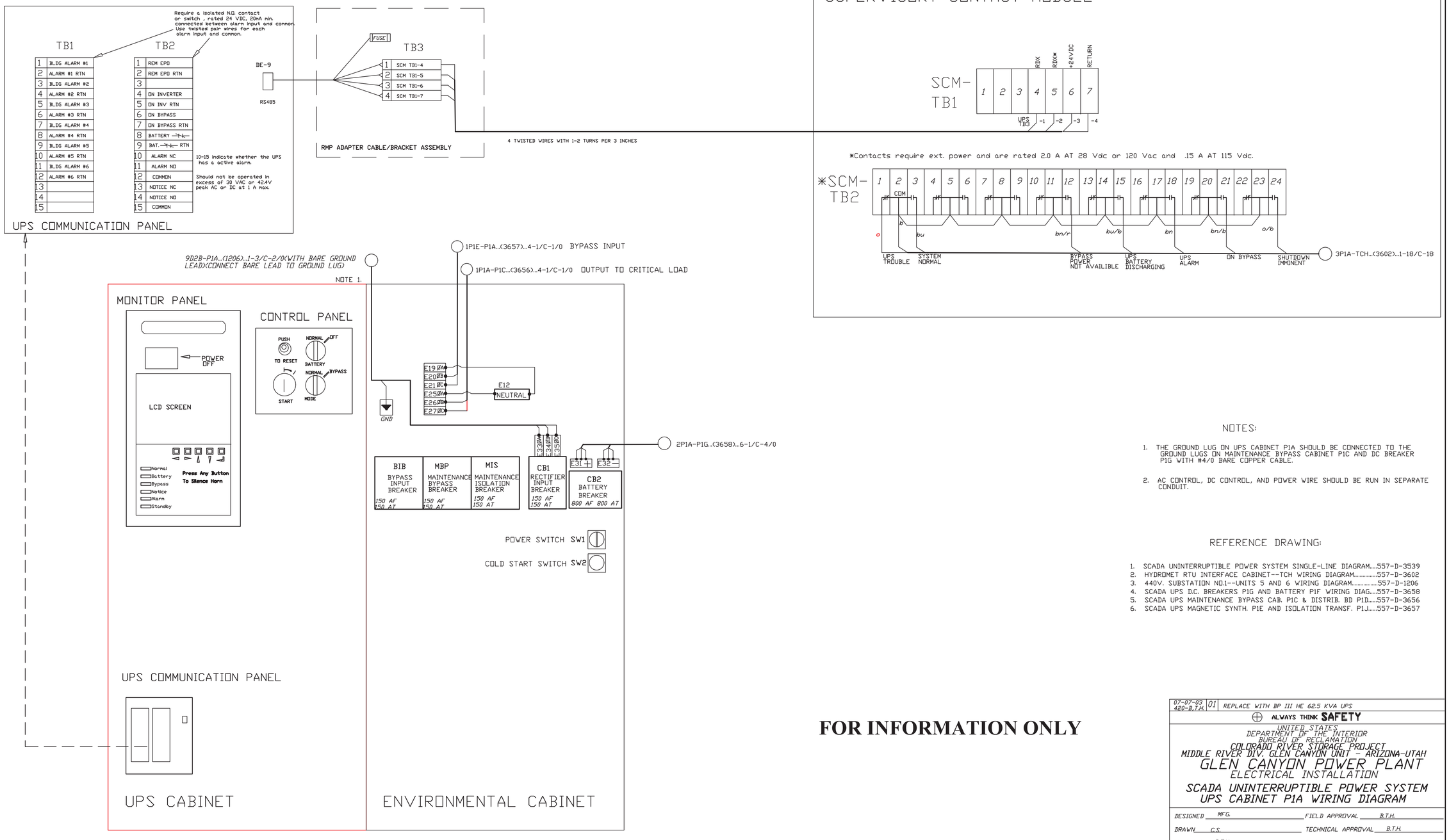

NOTES:

1. THE GROUND LUG ON UPS CABINET P1A SHOULD BE CONNECTED TO THE GROUND LUGS ON MAINTENANCE BYPASS CABINET P1C AND DC BREAKER P1G WITH #4/0 BARE COPPER CABLE.

2. AC CONTROL, DC CONTROL, AND POWER WIRE SHOULD BE RUN IN SEPARATE CONDUIT.

REFERENCE DRAWING:

1. SCADA UNINTERRUPTIBLE POWER SYSTEM SINGLE-LINE DIAGRAM.....557-D-3539
2. HYDROMET RTU INTERFACE CABINET--TCH WIRING DIAGRAM.....557-D-3602
3. 440V. SUBSTATION NO.1--UNITS 5 AND 6 WIRING DIAGRAM.....557-D-1206
4. SCADA UPS D.C. BREAKERS P1G AND BATTERY P1F WIRING DIAG.....557-D-3658
5. SCADA UPS MAINTENANCE BYPASS CAB. P1C & DISTRIB. BD P1D.....557-D-3656
6. SCADA UPS MAGNETIC SYNTH. P1E AND ISOLATION TRANSF. P1J.....557-D-3657

FOR INFORMATION ONLY

07-07-03 420-B.T.H.	01	REPLACE WITH BP III HE 62.5 KVA UPS

ALWAYS THINK **SAFETY**

UNITED STATES
DEPARTMENT OF THE INTERIOR
BUREAU OF RECLAMATION
COLORADO RIVER STORAGE PROJECT
MIDDLE RIVER DIV. GLEN CANYON UNIT - ARIZONA-UTAH

GLEN CANYON POWER PLANT

ELECTRICAL INSTALLATION

SCADA UNINTERRUPTIBLE POWER SYSTEM UPS CABINET P1A WIRING DIAGRAM

DESIGNED MFG. FIELD APPROVAL B.T.H.
DRAWN C.S. TECHNICAL APPROVAL B.T.H.
CHECKED B.T.H. APPROVED
CHIEF, ELECTRICAL BRANCH

DENVER, COLORADO JULY 19, 1991 557-D-3654

GLEN CANYON COMPUTER DRAFTING

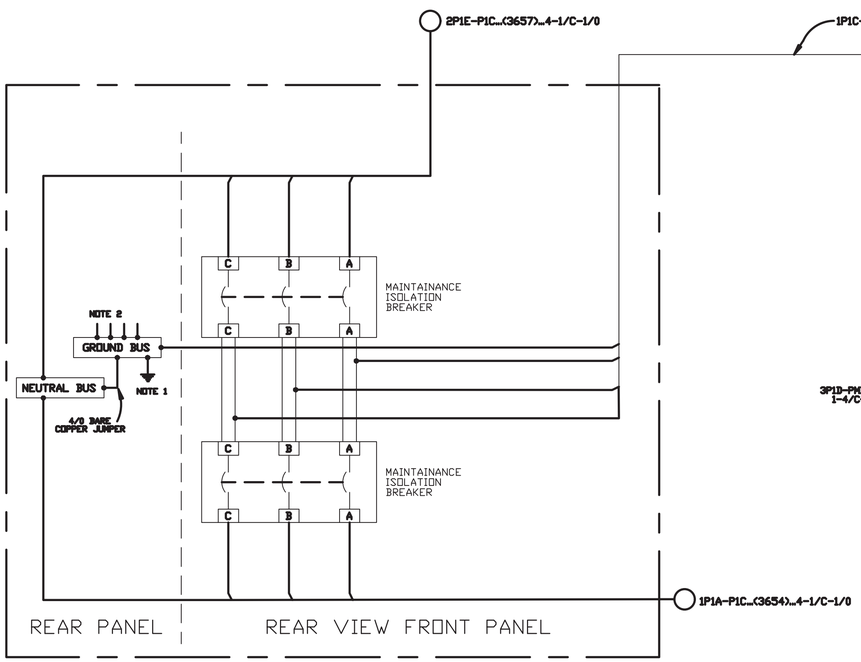

MAINTAINANCE BYPASS CABINET
P1C

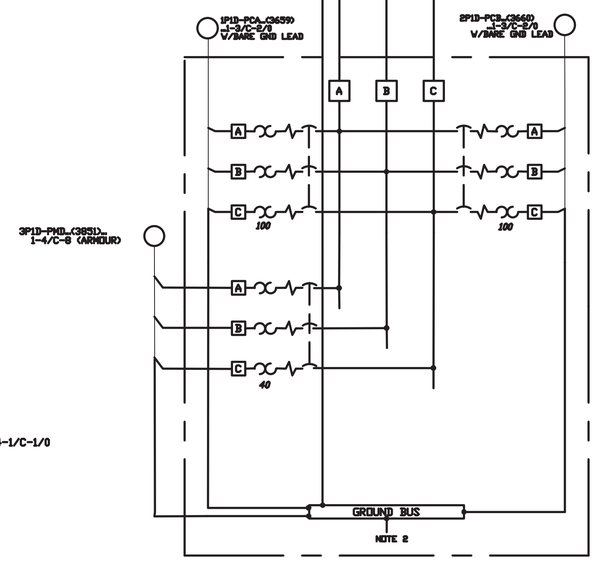

DISTRIBUTION BOARD
P1D

NOTES:

1. MAINTENANCE BYPASS CABINET P1C SHOULD BE GROUNDED TO THE POWERPLANT GROUND MAT WITH #4/0 BARE COPPER CABLE
2. THE GROUND LUGS OF UPS CABINETS P1A & P1B, AND DISTRIBUTION BOARD P1D SHOULD BE CONNECTED TO THE GROUND LUG ON MAINTENANCE BYPASS CABINET P1C WITH #4/0 BARE COPPER CABLE

REFERENCE DRAWING:

1. SCADA UNINTERRUPTIBLE POWER SYSTEM SINGLE-LINE DIAGRAM.....557-D-3539

FOR INFORMATION ONLY

ALWAYS THINK **SAFETY**

UNITED STATES
DEPARTMENT OF THE INTERIOR
BUREAU OF RECLAMATION
COLORADO RIVER STORAGE PROJECT
MIDDLE RIVER DIV. GLEN CANYON UNIT - ARIZONA-UTAH

GLEN CANYON POWER PLANT
ELECTRICAL INSTALLATION
SCADA UNINTERRUPTIBLE POWER SYSTEM
MAINTENANCE BYPASS CABINET P1C AND
DISTRIBUTION BOARD P1D WIRING DIAGRAM

DESIGNED	R.J.	FIELD APPROVAL	
DRAWN	G.C.P. / A.D.B.	TECHNICAL APPROVAL	
CHECKED	D.B.	APPROVED	CHIEF, ELECTRICAL BRANCH
DENVER, COLORADO	SEPTEMBER 5, 1991	557-D-3656	

GLEN CANYON COMPUTER DRAFTING

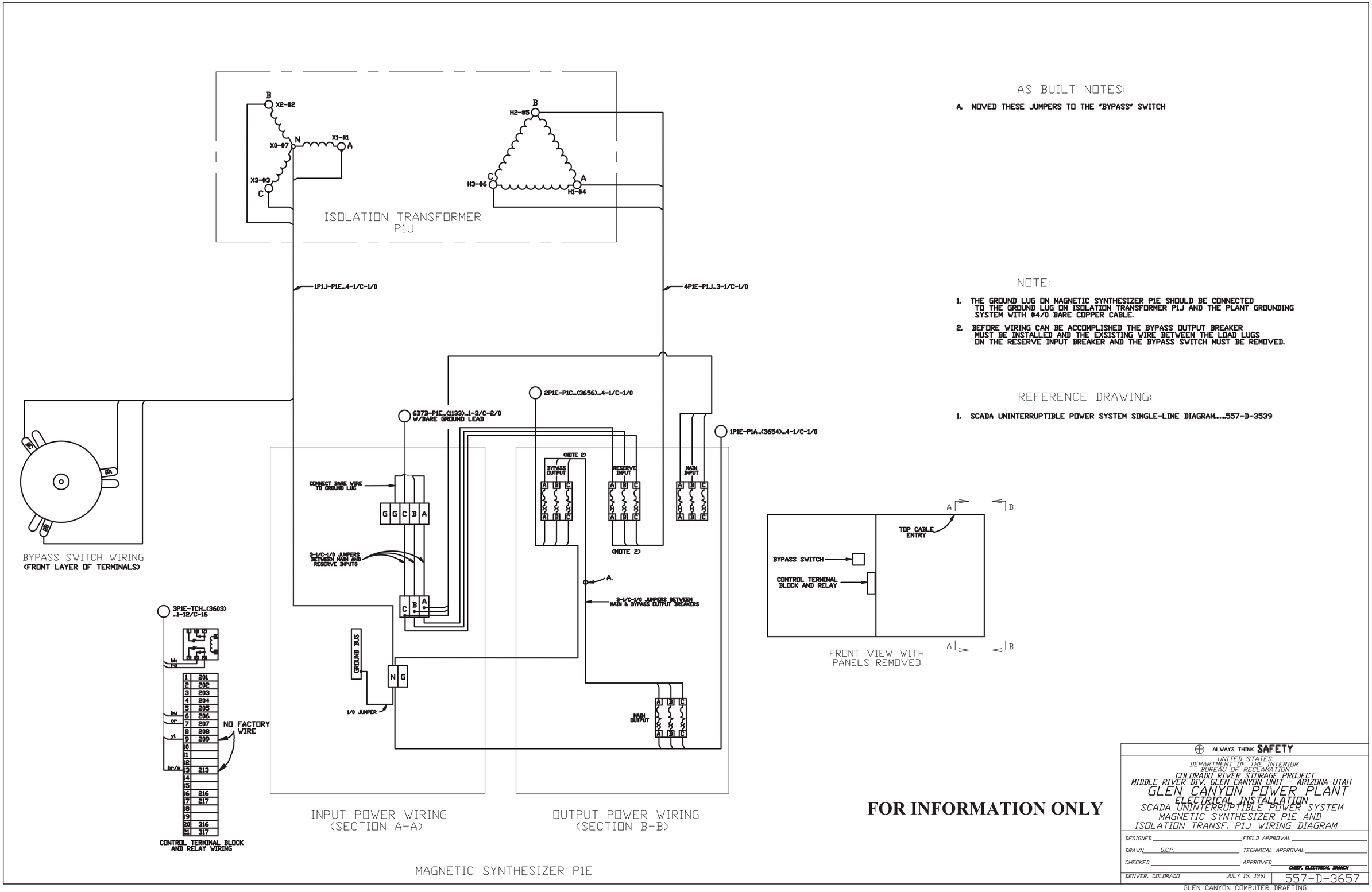

AS BUILT NOTES:

A. MOVED THESE JUMPERS TO THE "BYPASS" SWITCH

NOTE:

1. THE GROUND LUG ON MAGNETIC SYNTHESIZER P1E SHOULD BE CONNECTED TO THE GROUND LUG ON ISOLATION TRANSFORMER P1J AND THE PLANT GROUNDING SYSTEM WITH #4/0 BARE COPPER CABLE.
2. BEFORE WIRING CAN BE ACCOMPLISHED THE BYPASS OUTPUT BREAKER MUST BE INSTALLED AND THE EXSISTING WIRE BETWEEN THE LOAD LUGS ON THE RESERVE INPUT BREAKER AND THE BYPASS SWITCH MUST BE REMOVED.

REFERENCE DRAWING:

1. SCADA UNINTERRUPTIBLE POWER SYSTEM SINGLE-LINE DIAGRAM.....557-D-3539

FOR INFORMATION ONLY

ALWAYS THINK **SAFETY**

UNITED STATES
DEPARTMENT OF THE INTERIOR
BUREAU OF RECLAMATION
COLORADO RIVER STORAGE PROJECT
MIDDLE RIVER DIV. GLEN CANYON UNIT - ARIZONA-UTAH

GLEN CANYON POWER PLANT
ELECTRICAL INSTALLATION
SCADA UNINTERRUPTIBLE POWER SYSTEM
MAGNETIC SYNTHESIZER P1E AND
ISOLATION TRANSF. P1J WIRING DIAGRAM

DESIGNED _____ FIELD APPROVAL _____
DRAWN G.C.P. _____ TECHNICAL APPROVAL _____
CHECKED _____ APPROVED _____
CHIEF, ELECTRICAL BRANCH
DENVER, COLORADO JULY 19, 1991 557-D-3657

GLEN CANYON COMPUTER DRAFTING

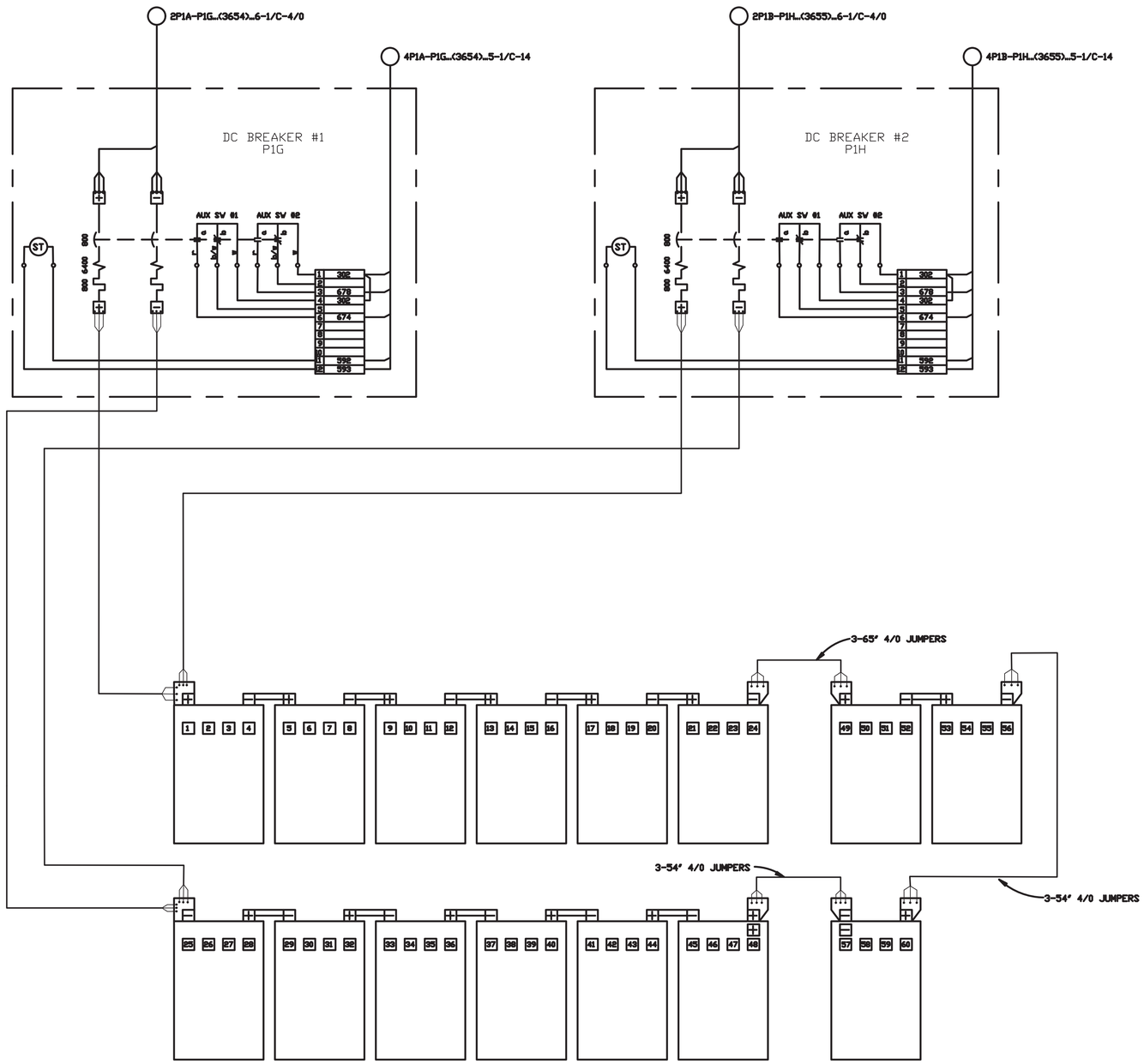

UPS BATTERY P1F

NOTES:

1. DC BREAKER P1G SHOULD BE CONNECTED TO THE GROUND LUGS ON UPS CABINET P1A AND THE BATTERY RACKS WITH NO4/0 BARE COPPER CABLE.
2. DC BREAKER P1H SHOULD BE CONNECTED TO THE GROUND LUGS ON UPS CABINET P1B AND THE BATTERY RACKS WITH NO4/0 BARE COPPER CABLE.
3. POWER AND CONTROL WIRING SHOULD BE RUN IN SEPARATE CONDUIT.
4. THE CONDUIT TERMINATING AT THE BATTERY SHOULD BE BONDED TO THE BATTERY RACKS.

REFERENCE DRAWING:

SCADA UNINTERRUPTIBLE POWER SYSTEM SINGLE-LINE DIAGRAM...557-D-3539

FOR INFORMATION ONLY

ALWAYS THINK **SAFETY**

UNITED STATES
DEPARTMENT OF THE INTERIOR
BUREAU OF RECLAMATION
COLORADO RIVER STORAGE PROJECT
MIDDLE RIVER DIV. GLEN CANYON UNIT - ARIZONA-UTAH

GLEN CANYON POWER PLANT
ELECTRICAL INSTALLATION
SCADA UNINTERRUPTIBLE POWER SYSTEM
D.C. BREAKERS P1G & P1H & BATTERY P1F
WIRING DIAGRAM

DESIGNED _____ FIELD APPROVAL _____
DRAWN G.C.P. TECHNICAL APPROVAL _____
CHECKED _____ APPROVED _____
CHIEF, ELECTRICAL BRANCH
DENVER, COLORADO JULY 19, 1991 557-D-3658

GLEN CANYON COMPUTER DRAFTING

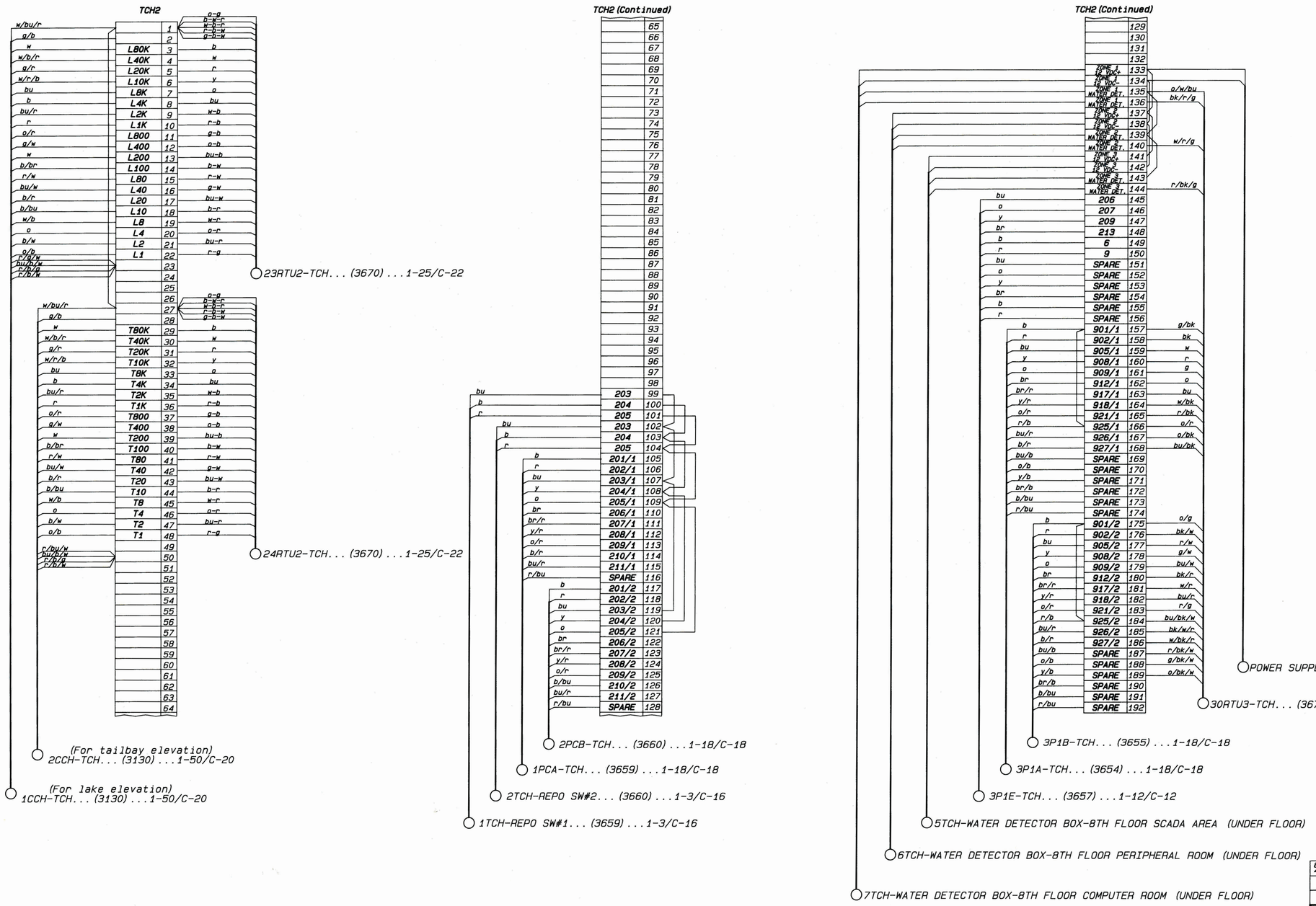

FOR INFORMATION ONLY

9-20-91 R.C.	ADDED WATER DETECTOR BOXES, POWER SUPPLY AND REDRAWN
THIS DRAWING SUPERSEDES 557-D-3459 8	

ALWAYS THINK **SAFETY**

UNITED STATES
DEPARTMENT OF THE INTERIOR
BUREAU OF RECLAMATION
COLORADO RIVER STORAGE PROJECT
MIDDLE RIVER DIV. GLEN CANYON UNIT - ARIZONA-UTAH

GLEN CANYON POWER PLANT
SCADA SYSTEM
HYDROMET RTU INTERFACE CABINET--TCH WIRING DIAGRAM

DESIGNED O.B. — FIELD APPROVAL GARY KUHSIOSS
DRAWN E.H.P./A.M./G.C.P. — TECHNICAL APPROVAL QUANE H. BERRIER
CHECKED M.M. — APPROVED FELIX W. COOK, SR. CHIEF, ELECTRICAL BRANCH

DENVER, COLORADO SEPTEMBER 12, 1989 SHEET 2 OF 3 — 557-D-3602

GLEN CANYON COMPUTER DRAFTING

JUL 06 2006
NOV 20 '92

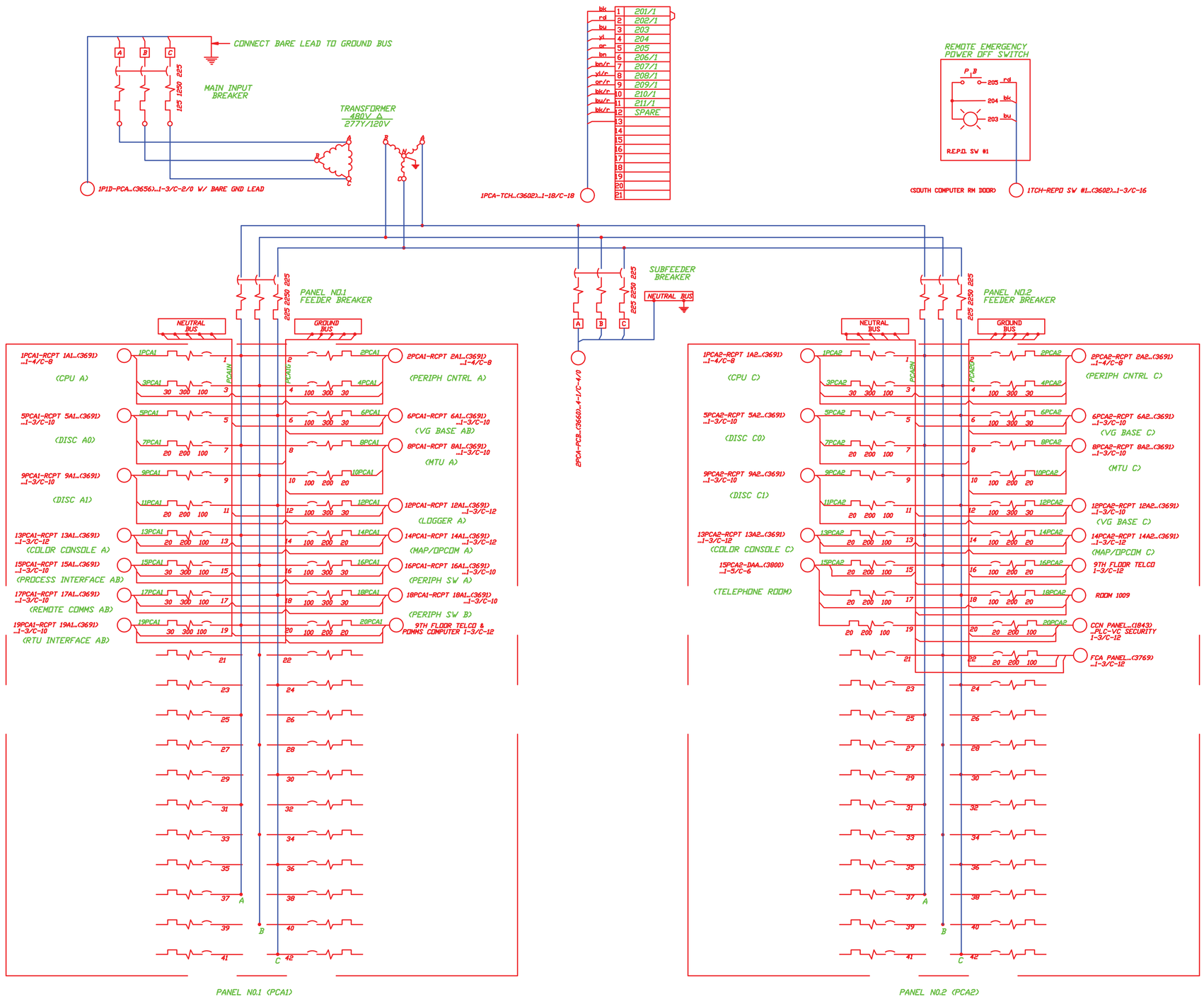

SYMBOL:

⏚ DENOTES CONNECTION TO DISTRIBUTION CENTER GROUND BUS

REFERENCE DRAWING:

SCADA UPS SYSTEM SINGLE-LINE DIAGRAM....557-D-3539

NOTES:

1. THE GROUND BUS ON DISTRIBUTION CENTER PCA SHOULD BE CONNECTED TO THE GROUND BUS ON DISTRIBUTION CENTER PCB WITH NO.4/0 BARE COPPER CABLE.

2. AN ADDITIONAL NO.4/0 BARE COPPER GROUND CABLE SHOULD BE CONNECTED BETWEEN THE MIDPOINT OF THE GROUNDING JUMPER (NOTE 1) AND THE PLANT GROUNDING SYSTEM GROUND LUG ON THE NORTH WALL.

For Information Only

6-10-92 420-RJG	ADDED BREAKERS FOR TEL. ROOM, FCA, CCN AND REDRAWN

ALWAYS THINK **SAFETY**

UNITED STATES
DEPARTMENT OF THE INTERIOR
BUREAU OF RECLAMATION
COLORADO RIVER STORAGE PROJECT
MIDDLE RIVER DIV. GLEN CANYON UNIT - ARIZONA-UTAH

GLEN CANYON POWER PLANT
ELECTRICAL INSTALLATION

SCADA UPS PCA AND R.E.P.O. SWITCH #1 WIRING DIAGRAM

DESIGNED	D.B.	FIELD APPROVAL	G. KUHSTOSS
DRAWN	G.C.P.	TECHNICAL APPROVAL	D. BERRIER
CHECKED	M.K.	APPROVED	CHIEF, ELECTRICAL BRANCH

DENVER, COLORADO — APRIL 2, 1990 — 557-D-3659

GLEN CANYON COMPUTER DRAFTING

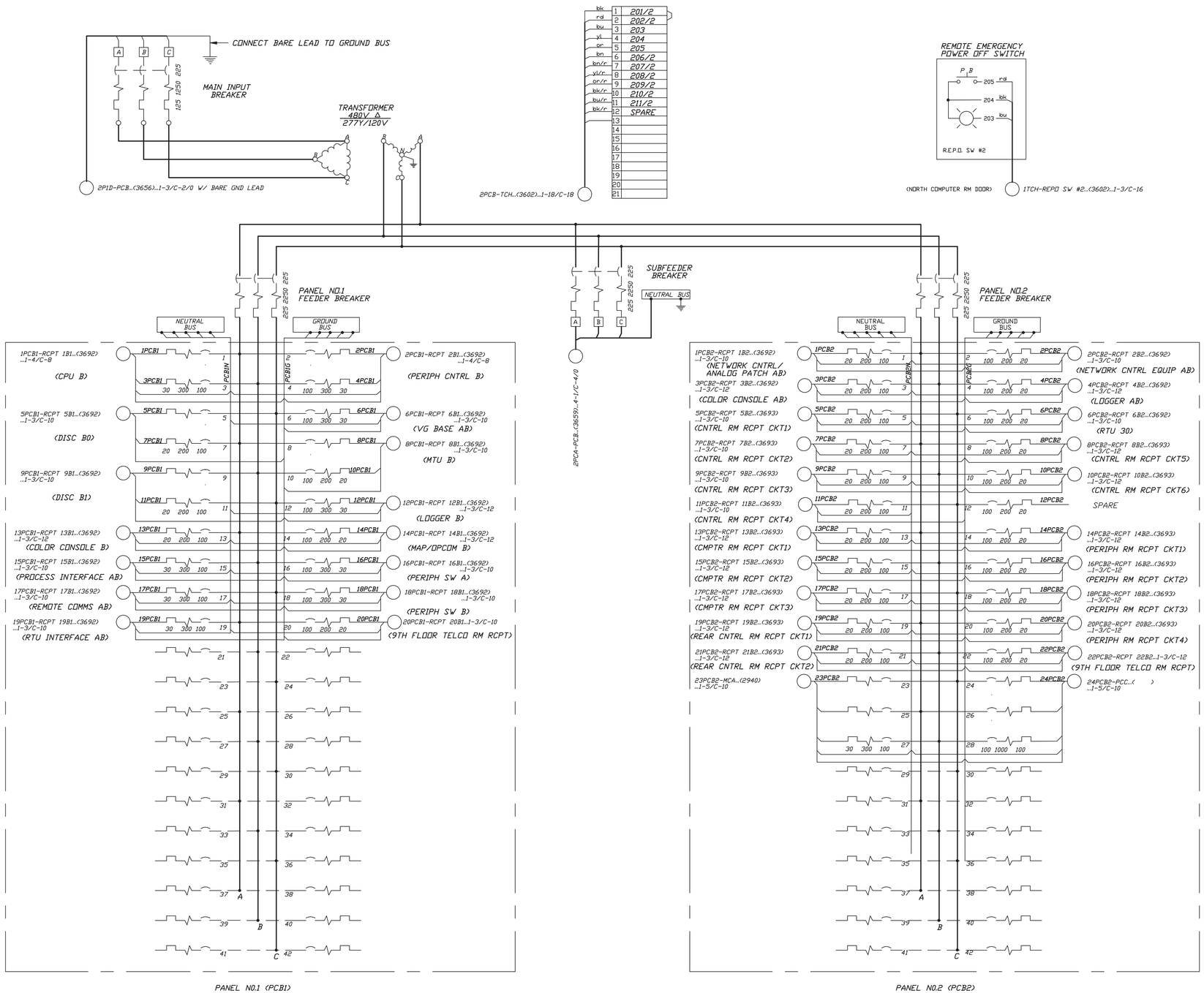

SYMBOL:

⏚ DENOTES CONNECTION TO DISTRIBUTION CENTER GROUND BUS

REFERENCE DRAWING:

SCADA UPS SYSTEM SINGLE-LINE DIAGRAM....557-D-3539

NOTES:

1. THE GROUND BUS ON DISTRIBUTION CENTER PCB SHOULD BE CONNECTED TO THE GROUND BUS ON DISTRIBUTION CENTER PCA WITH NO.4/0 BARE COPPER CABLE.
2. AN ADDITIONAL NO.4/0 BARE COPPER GROUND CABLE SHOULD BE CONNECTED BETWEEN THE MIDPOINT OF THE GROUNDING JUMPER (NOTE 1) AND THE PLANT GROUNDING SYSTEM GROUND LUG ON THE NORTH WALL.

For Information Only

THIS DRAWING SUPERSEDES DRAWING 557-D-3660, 2014-05-01

ALWAYS THINK **SAFETY**

UNITED STATES
DEPARTMENT OF THE INTERIOR
BUREAU OF RECLAMATION
COLORADO RIVER STORAGE PROJECT
MIDDLE RIVER DIV. GLEN CANYON UNIT - ARIZONA-UTAH

GLEN CANYON POWER PLANT
ELECTRICAL INSTALLATION
SCADA UPS PCB AND R.E.P.O. SWITCH #2 WIRING DIAGRAM

DESIGNED D.B. FIELD APPROVAL Gary Khustoss
DRAWN D.C./ TECHNICAL APPROVAL Duane H. Berrier
CHECKED APPROVED CHIEF, ELECTRICAL BRANCH
DENVER, COLORADO APRIL 2, 1990 557-D-3660

GLEN CANYON COMPUTER DRAFTING

9TH FLOOR

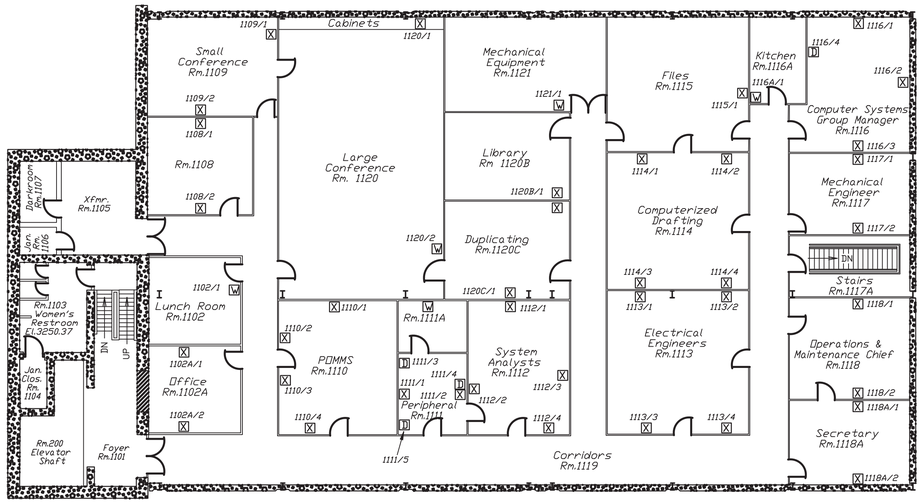

SCALE OF FEET

FLOOR EL. 3257.25

8TH FLOOR

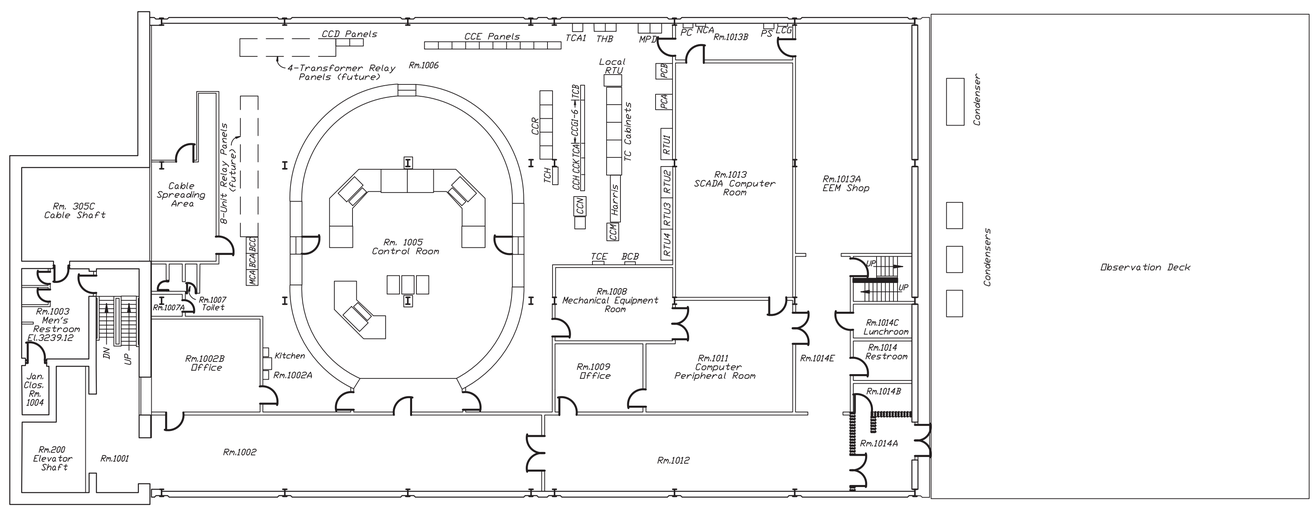

SCALE OF FEET

FLOOR EL. 3244.24

SYMBOLS

- [X] DUPLEX VOICE/DATA JACKS
- [D] DUPLEX DATA/DATA JACKS
- [W] WALL-MOUNTED SIMPLEX PHONE JACK

NOTES

1. Keep cables clear of flourescent lights.
2. All cables terminate in room 1111A.

For Information Only

ALWAYS THINK SAFETY

UNITED STATES
DEPARTMENT OF THE INTERIOR
BUREAU OF RECLAMATION
COLORADO RIVER STORAGE PROJECT
MIDDLE RIVER DIV. GLEN CANYON UNIT - ARIZONA-UTAH

GLEN CANYON POWER PLANT

TELEPHONE SYSTEM INSTALLATION
PHONEJACK & EXTENSION LAYOUT
EIGHTH & NINTH FLOORS

DESIGNED _____ SUBMITTED _____
DRAWN _____ RECOMMENDED _____
CHECKED _____ APPROVED _____

PAGE, ARIZONA — OCTOBER 12, 1990 — 557-D-3850

NOTES

1. MAIN BREAKER IS TRIPPED WHEN EPO OR REPO IS ACTIVATED BREAKER MAY NEED TO BE RESET UPON LOSS OF POWER

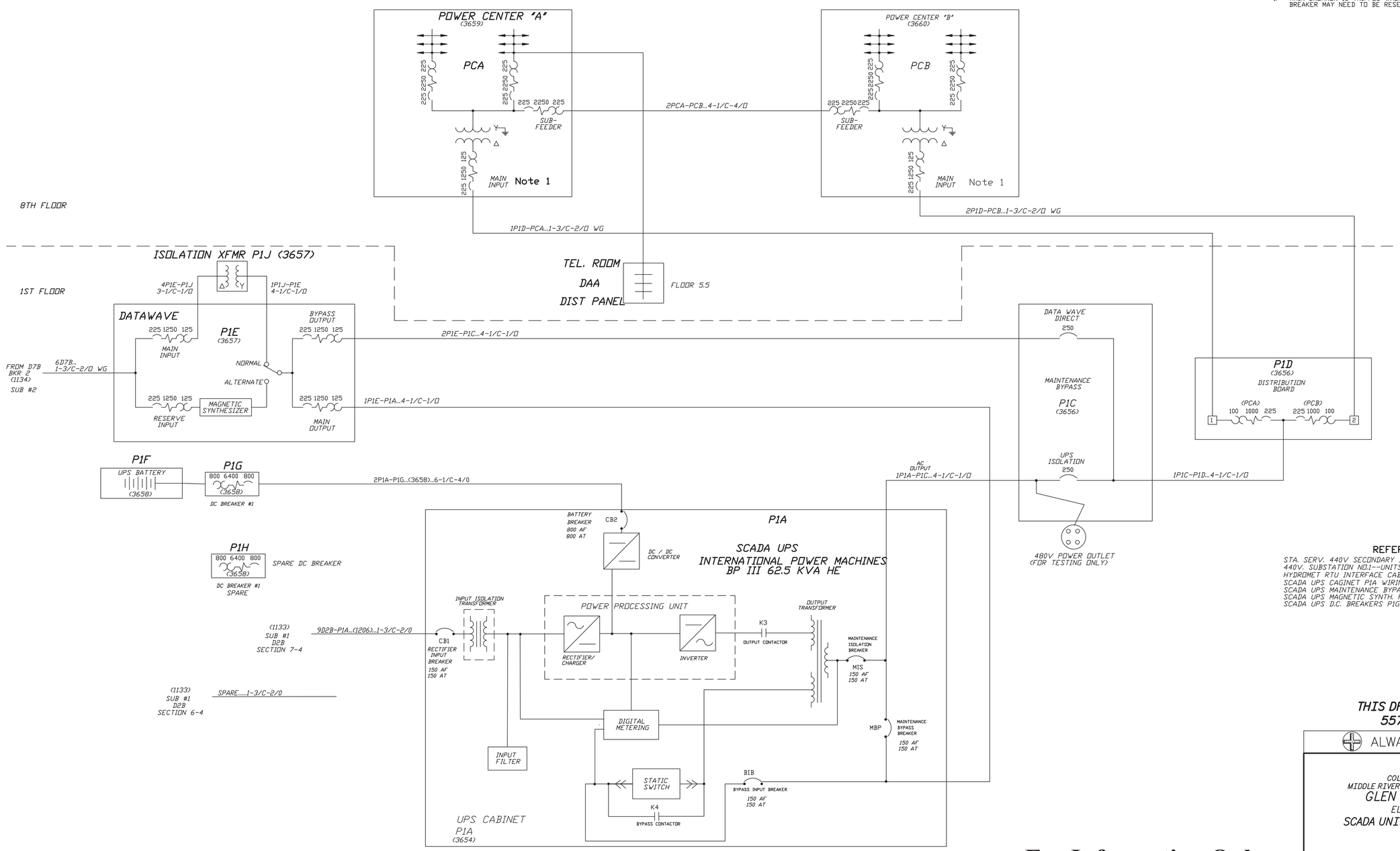

REFERENCE DRAWINGS

STA. SERV. 440V SECONDARY DISTRIB. UNIT SUB. NO. 1 &2.....557-D-1133&4
440V. SUBSTATION NO.1--UNITS 5 AND 6 WIRING DIAGRAM.....557-D-1206
HYDROMET RTU INTERFACE CABINET--TCH WIRING DIAGRAM.....557-D-3602
SCADA UPS CAGINET P1A WIRING DIAGRAM.....557-D-3654
SCADA UPS MAINTENANCE BYPASS CAB. P1C & DISTRIB. BD P1D.....557-D-3656
SCADA UPS MAGNETIC SYNTH. P1E AND ISOLATION TRANSF. P1J.....557-D-3657
SCADA UPS D.C. BREAKERS P1G AND BATTERY P1F WIRING DIAG.....557-D-3658

THIS DRAWING SUPERSEDES DRAWING 557-D-3539, 2014-05-01

ALWAYS THINK SAFETY

UNITED STATES
DEPARTMENT OF THE INTERIOR
BUREAU OF RECLAMATION
COLORADO RIVER STORAGE PROJECT
MIDDLE RIVER DIV. GLEN CANYON UNIT - ARIZONA-UTAH

GLEN CANYON POWER PLANT

ELECTRICAL INSTALLATION

SCADA UNINTERRUPTIBLE POWER SYSTEM
SINGLE-LINE
DIAGRAM

DESIGNED R.J. FIELD APPROVAL GARY KUHSTOSS
DRAWN D.L.C./ A.M./A.D.B. TECHNICAL APPROVAL DUANE H. BERRIER
CHECKED R.J. APPROVED
CHIEF, ELECTRICAL BRANCH

DENVER, COLORADO JUNE 25, 1991 SHEET 1 OF 1 557-420-13539

For Information Only

DATE AND TIME PLOTTED JANUARY 6, 2006 16:21
PLOTTED BY CLSKARP
CAD SYSTEM AutoCAD Rel. 16.1s
CAD FILENAME D2539.DWG

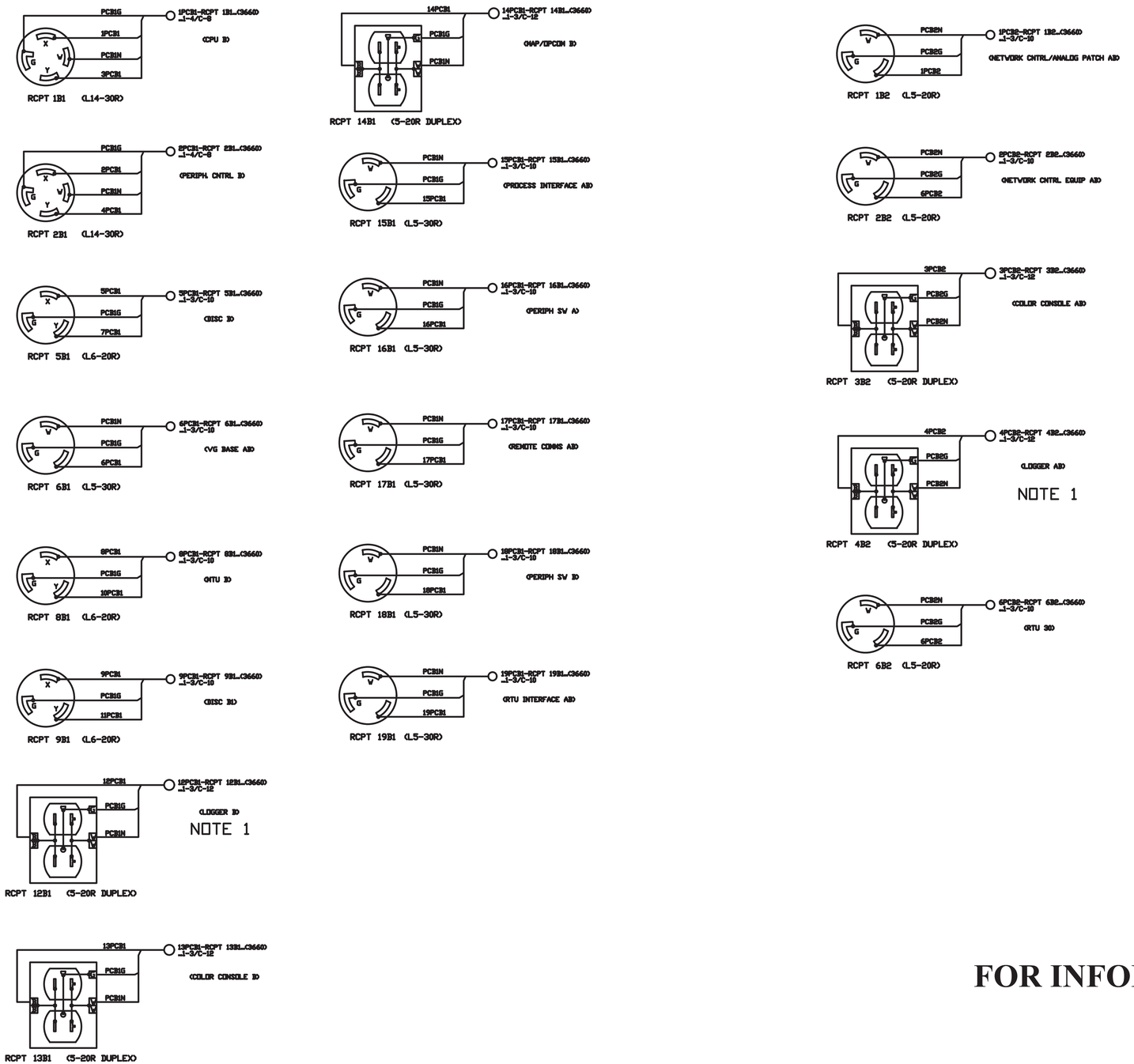

NOTES

1. *WIRE 5 RECEPTACLES IN PARALLEL.*

FOR INFORMATION ONLY

THIS DRAWING SUPERSEDES DRAWING 557-D-3692, 2014-05-01

ALWAYS THINK **SAFETY**

UNITED STATES
DEPARTMENT OF THE INTERIOR
BUREAU OF RECLAMATION
COLORADO RIVER STORAGE PROJECT
MIDDLE RIVER DIV. GLEN CANYON UNIT - ARIZONA-UTAH

GLEN CANYON POWER PLANT

ELECTRICAL INSTALLATION
SCADA UNINTERRUPIBLE POWER SYSTEM
POWER DISTRIBUTION CENTER PCB RECEPTACLES
WIRING DIAGRAM

DESIGNED D.B. FIELD APPROVAL
DRAWN G.C.P. TECHNICAL APPROVAL
CHECKED APPROVED
CHIEF, ELECTRICAL BRANCH

DENVER, COLORADO DECEMBER 14, 1992 SHEET 1 OF 2 | 557-420-13692

GLEN CANYON COMPUTER DRAFTING

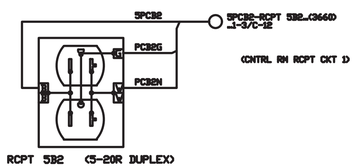

RCPT 5B2 (5-20R DUPLEX)
SEE NOTE 1

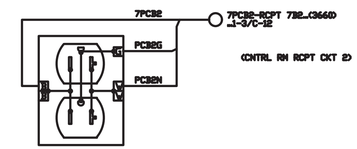

RCPT 7B2 (5-20R DUPLEX)
SEE NOTE 1

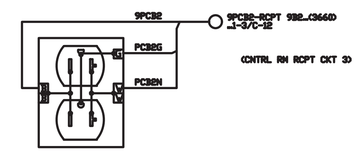

RCPT 9B2 (5-20R DUPLEX)
SEE NOTE 1

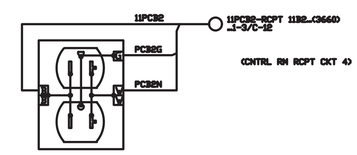

RCPT 11B2 (5-20R DUPLEX)
SEE NOTE 1

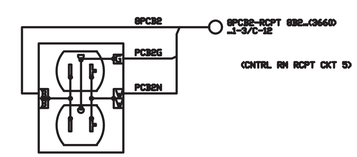

RCPT 8B2 (5-20R DUPLEX)
SEE NOTE 5

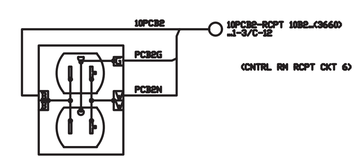

RCPT 10B2 (5-20R DUPLEX)
SEE NOTE 5

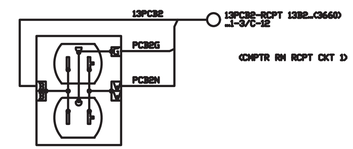

RCPT 13B2 (5-20R DUPLEX)
SEE NOTE 1

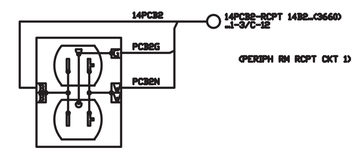

RCPT 14B2 (5-20R DUPLEX)
SEE NOTE 2

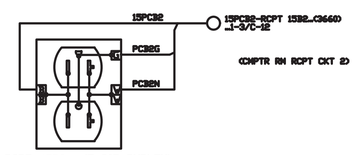

RCPT 15B2 (5-20R DUPLEX)
SEE NOTE 3

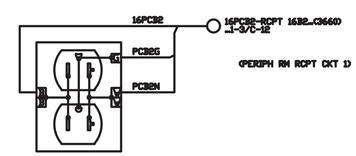

RCPT 16B2 (5-20R DUPLEX)
SEE NOTE 2

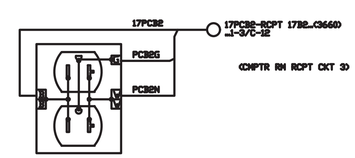

RCPT 17B2 (5-20R DUPLEX)
SEE NOTE 4

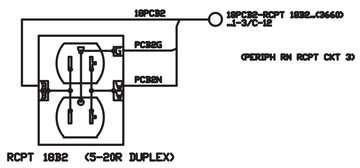

RCPT 18B2 (5-20R DUPLEX)
SEE NOTE 2

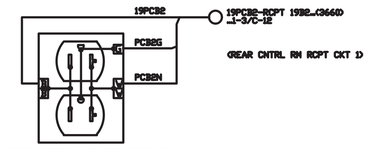

RCPT 19B2 (5-20R DUPLEX)
SEE NOTE 1

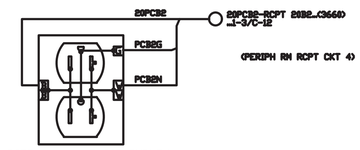

RCPT 20B2 (5-20R DUPLEX)
SEE NOTE 4

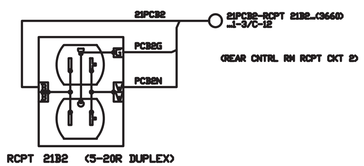

RCPT 21B2 (5-20R DUPLEX)
SEE NOTE 1

NOTES:

1. *WIRE 6 RECEPTACLES (TOTAL) IN PARALLEL.*
2. *WIRE 3 RECEPTACLES (TOTAL) IN PARALLEL.*
3. *WIRE 5 RECEPTACLES (TOTAL) IN PARALLEL.*
4. *WIRE 4 RECEPTACLES (TOTAL) IN PARALLEL.*
5. *WIRE 7 RECEPTACLES (TOTAL) IN PARALLEL.*

FOR INFORMATION ONLY

THIS DRAWING SUPERSEDES DRAWING 557-D-3693, 2014-05-01

ALWAYS THINK **SAFETY**

UNITED STATES
DEPARTMENT OF THE INTERIOR
BUREAU OF RECLAMATION
COLORADO RIVER STORAGE PROJECT
MIDDLE RIVER DIV. GLEN CANYON UNIT - ARIZONA-UTAH

GLEN CANYON POWER PLANT
ELECTRICAL INSTALLATION
SCADA UNINTERRUPTIBLE POWER SYSTEM
POWER DISTRIBUTION CENTER PCB RECEPTACLES
WIRING DIAGRAM

DESIGNED D.B. FIELD APPROVAL
DRAWN G.C.P TECHNICAL APPROVAL
CHECKED APPROVED
CHIEF, ELECTRICAL BRANCH

DENVER, COLORADO DECEMBER 14, 1992 SHEET 2 OF 2 | 557-420-13693

GLEN CANYON COMPUTER DRAFTING

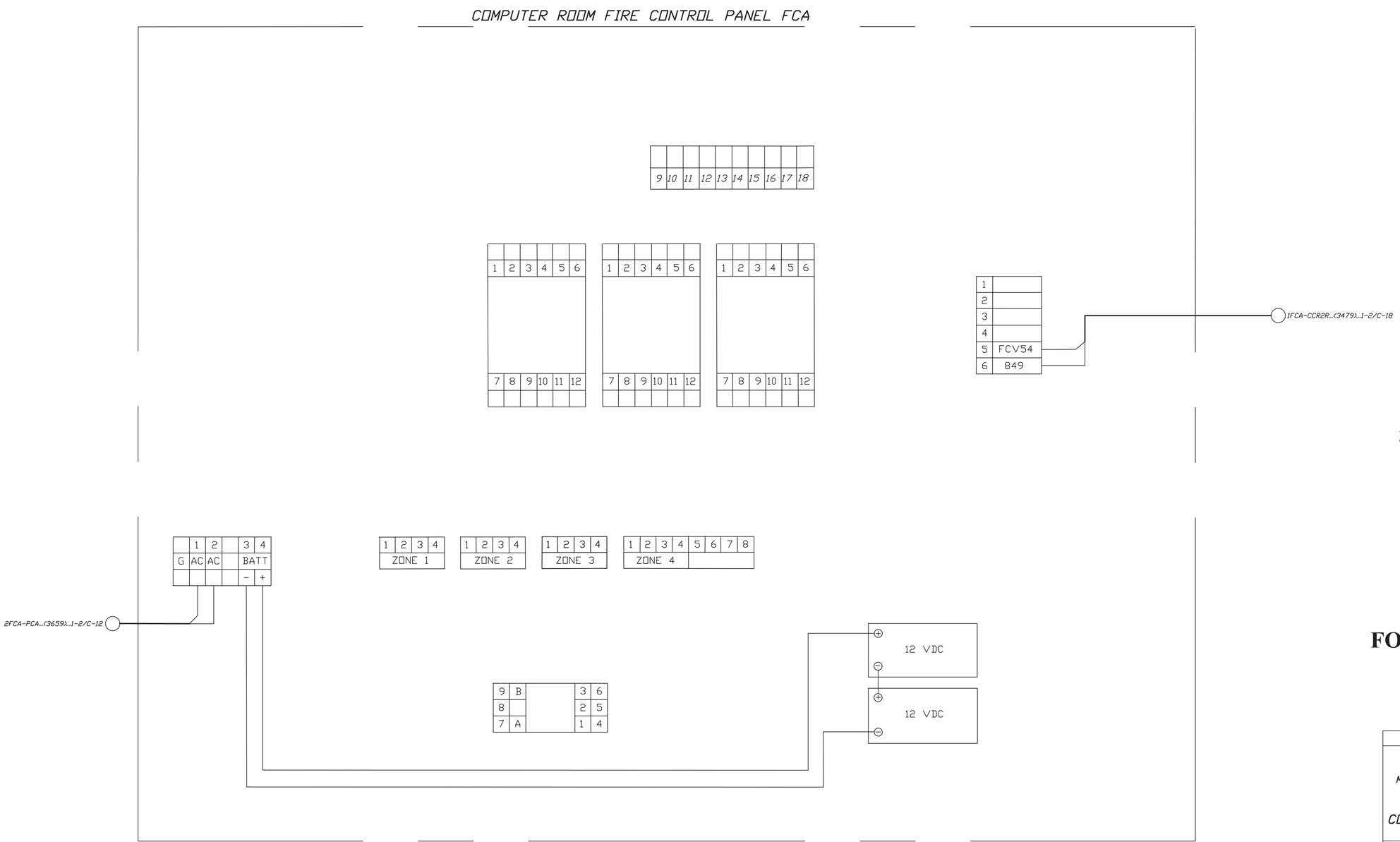

NOTES:

1. FOR INTERNAL WIRING SEE FIRE-LITE INSTRUCTION BOOK.

FOR INFORMATION ONLY

THIS DRAWING SUPERSEDES DRAWING 557-D-3769, 2014-05-01

ALWAYS THINK **SAFETY**

UNITED STATES
DEPARTMENT OF THE INTERIOR
BUREAU OF RECLAMATION
COLORADO RIVER STORAGE PROJECT
MIDDLE RIVER DIV. GLEN CANYON UNIT - ARIZONA-UTAH

GLEN CANYON POWER PLANT
ELECTRICAL INSTALLATION

COMPUTER ROOM FIRE CONTROL PANEL FCA
EXTERNAL WIRING DIAGRAM

DESIGNED MFR. FIELD APPROVAL G. KUHSTOSS
DRAWN G.C.P. TECHNICAL APPROVAL D. BERRIER
CHECKED D.B. APPROVED
CHIEF, ELECTRICAL BRANCH
DENVER, COLORADO APRIL 16, 1991 557-420-13769

GLEN CANYON COMPUTER DRAFTING

PANEL DAA

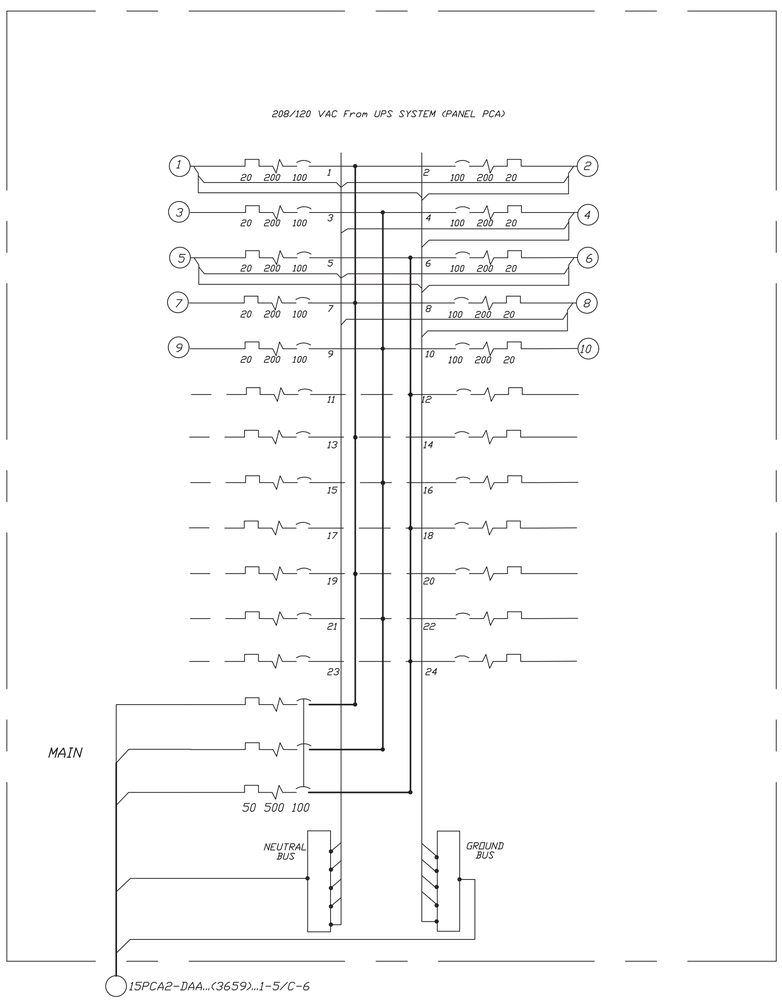

BREAKER NUMBER	BREAKER SIZE	BREAKER USE
1	20A	MAIN PBX (LADDER)
2	20A	WEST WALL South receptacle
3	20A	SPARE PBX (LADDER)
4	20A	WEST WALL Middle receptacle
5	20A	AUXILIARY EQUIPMENT Quad receptacle
6	20A	WEST WALL North receptacle
7	20A	(SPARE)
8	20A	DESK RECEPTACLE
9	20A	(SPARE)
10	20A	(SPARE)
11		
12		
13		
14		
15		
16		
17		
18		
19		
20		
21		
22		
23		
24		

REFERENCE DRAWING:

PCA WIRING.....557-D-3659

NOTES:

1. Outlets on this system are not to be used for non-UPS service loads such as room heaters, soldering irons, etc, or other non-critical loads. Use the normal duplex wall outlets for such purposes.

THIS DRAWING SUPERSEDES DRAWING 557-D-3800, 2014-05-01

FOR INFORMATION ONLY

ALWAYS THINK SAFETY

UNITED STATES
DEPARTMENT OF THE INTERIOR
BUREAU OF RECLAMATION
COLORADO RIVER STORAGE PROJECT
MIDDLE RIVER DIV. GLEN CANYON UNIT -- ARIZONA-UTAH

GLEN CANYON POWER PLANT
ELECTRICAL INSTALLATION
TELEPHONE ROOM UPS PANEL DAA
WIRING DIAGRAM

DESIGNED D.B. FIELD APPROVAL Gary Khustoss
DRAWN M.M. TECHNICAL APPROVAL Duane H. Berrier
CHECKED APPROVED
CHIEF, ELECTRICAL BRANCH
DENVER, COLORADO March 9, 1992 557-420-13800

GLEN CANYON COMPUTER DRAFTING

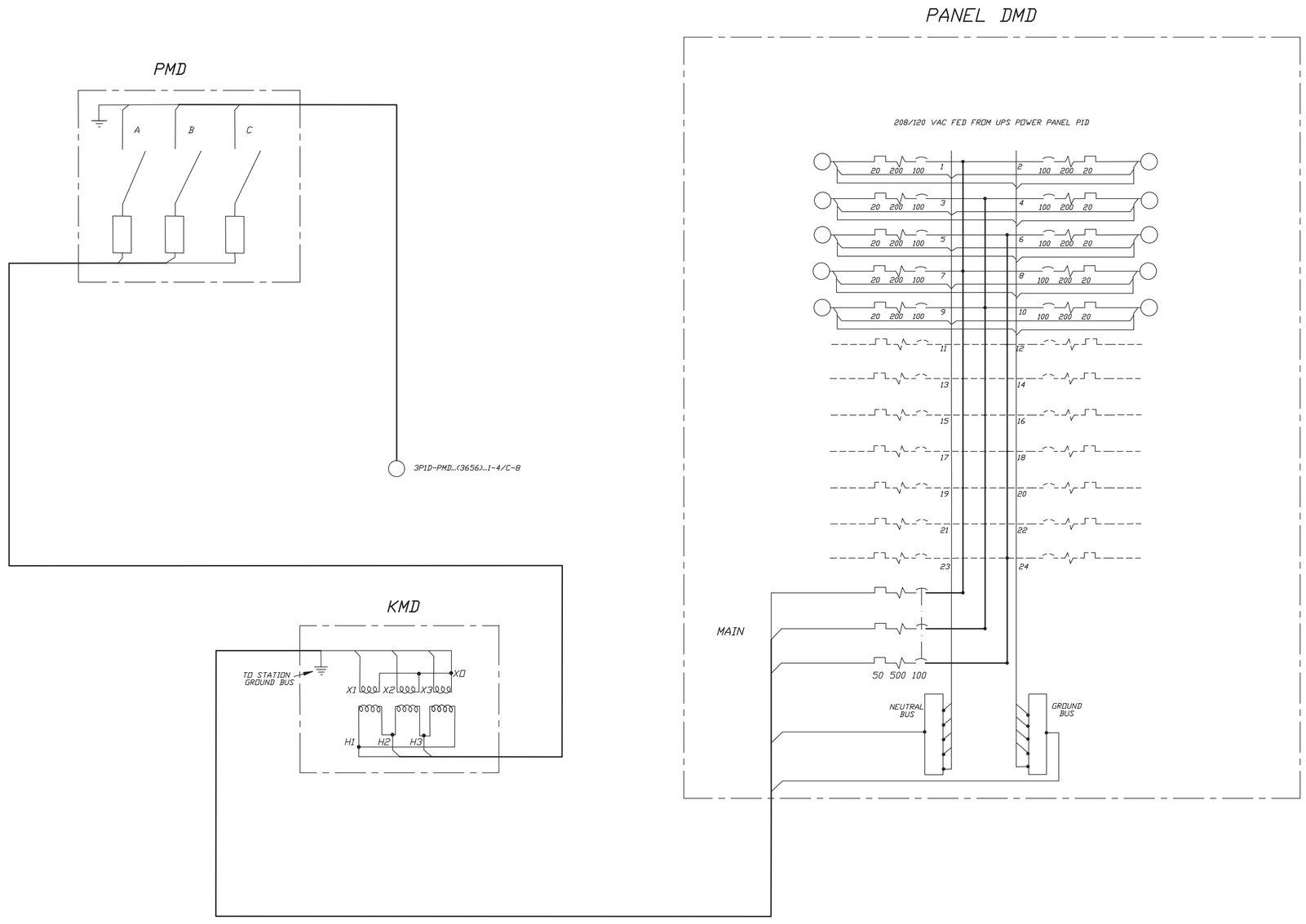

BREAKER NUMBER	BREAKER SIZE	BREAKER USE
1	20A	ELEC. FORMANS U.P.S. OUTLET
2	20A	MAINT. FORMANS U.P.S. OUTLET
3	20A	MECH. FORMANS U.P.S. OUTLET
4	20A	ELEC. SHOP U.P.S. OUTLET
5	20A	
6	20A	
7	20A	
8	20A	
9	20A	
10	20A	
11		
12		
13		
14		
15		
16		
17		
18		
19		
20		
21		
22		
23		
24		

REFERENCE DRAWING:

P1D WIRING.....557-D-3656

NOTES:

1. Outlets on this system are not to be used for non-UPS service loads such as room heaters, soldering irons, etc, or other non-critical loads. Use the normal duplex wall outlets for such purposes.

THIS DRAWING SUPERSEDES DRAWING 557-D-3851, 2014-05-01

FOR INFORMATION ONLY

ALWAYS THINK **SAFETY**

UNITED STATES
DEPARTMENT OF THE INTERIOR
BUREAU OF RECLAMATION
COLORADO RIVER STORAGE PROJECT
MIDDLE RIVER DIV. GLEN CANYON UNIT - ARIZONA-UTAH

GLEN CANYON POWER PLANT

ELECTRICAL INSTALLATION

UPS PANEL DMD, TRANSF KMD, AND DISC.SW. PMD WIRING DIAGRAMS

DESIGNED D.B.	FIELD APPROVAL GARY KUHSTOSS
DRAWN D.B./G.C.P.	TECHNICAL APPROVAL DUANE H. BERRIER
CHECKED D.B.	APPROVED CHIEF, ELECTRICAL BRANCH
DENVER, COLORADO May 14, 1991	557-420-13851

GLEN CANYON COMPUTER DRAFTING

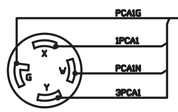

RCPT 1A1 (L14-30R)

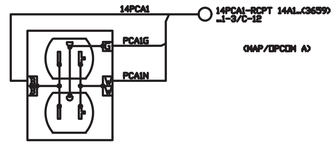

RCPT 14A1 (5-20R DUPLEX)

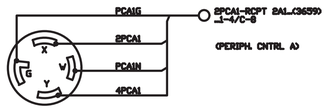

RCPT 2A1 (L14-30R)

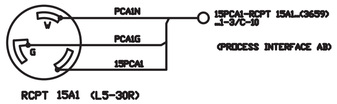

RCPT 15A1 (L5-30R)

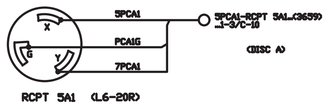

RCPT 5A1 (L6-20R)

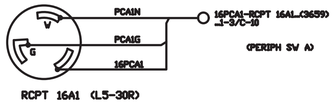

RCPT 16A1 (L5-30R)

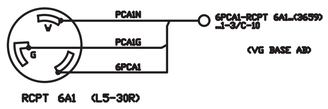

RCPT 6A1 (L5-30R)

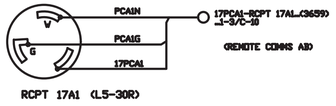

RCPT 17A1 (L5-30R)

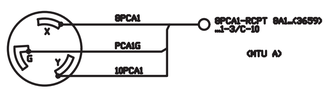

RCPT 8A1 (L6-20R)

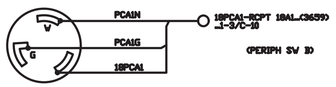

RCPT 18A1 (L5-30R)

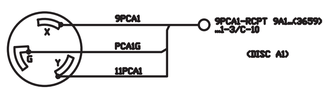

RCPT 9A1 (L6-20R)

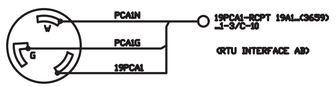

RCPT 19A1 (L5-30R)

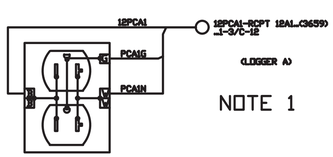

NOTE 1

RCPT 12A1 (5-20R DUPLEX)

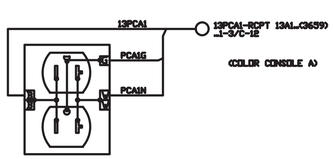

RCPT 13A1 (5-20R DUPLEX)

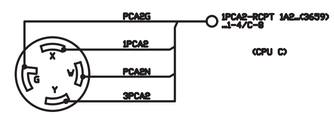

RCPT 1A2 (L14-30R)

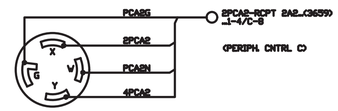

RCPT 2A2 (L14-30R)

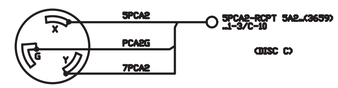

RCPT 5A2 (L6-20R)

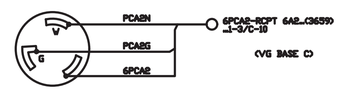

RCPT 6A2 (L5-30R)

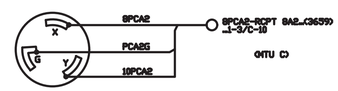

RCPT 8A2 (L6-20R)

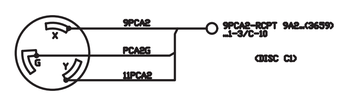

RCPT 9A2 (L6-20R)

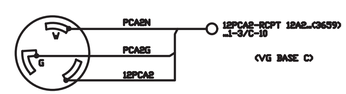

RCPT 12A2 (L5-30R)

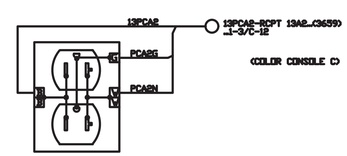

RCPT 13A2 (5-20R DUPLEX)

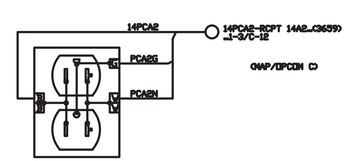

RCPT 14A2 (5-20R DUPLEX)

NOTES

1. WIRE 5 RECEPTACLES IN PARALLEL.

FOR INFORMATION ONLY

THIS DRAWING SUPERSEDES DRAWING
557-D-3691, 2014-05-01

ALWAYS THINK **SAFETY**

UNITED STATES
DEPARTMENT OF THE INTERIOR
BUREAU OF RECLAMATION
COLORADO RIVER STORAGE PROJECT
MIDDLE RIVER DIV. GLEN CANYON UNIT - ARIZONA-UTAH
GLEN CANYON POWER PLANT
ELECTRICAL INSTALLATION
SCADA UNINTERRUPTIBLE POWER SYSTEM
POWER DISTRIBUTION CENTER PCA RECEPTACLES
WIRING DIAGRAM

DESIGNED	D.B.	FIELD APPROVAL	
DRAWN	G.C.P.	TECHNICAL APPROVAL	
CHECKED		APPROVED	CHIEF, ELECTRICAL BRANCH
DENVER, COLORADO	DECEMBER 14, 1992	557-420-13691	

GLEN CANYON COMPUTER DRAFTING