TYPE B-3 FINAL

Drawings

Repair B403 for Cyber

Project Number PBXP222050

Prepared for

179th Civil Engineering Squadron
Ohio Air National Guard
Mansfield Lahm ANG Base, OH

May 2026

Jacobs

Jacobs

REPAIR B403 FOR CYBER

PBXP222050

OHIO AIR NATIONAL GUARD

MANSFIELD LAHM AIR NATIONAL GUARD BASE, OH

TYPE B-3 FINAL

MAY 2026

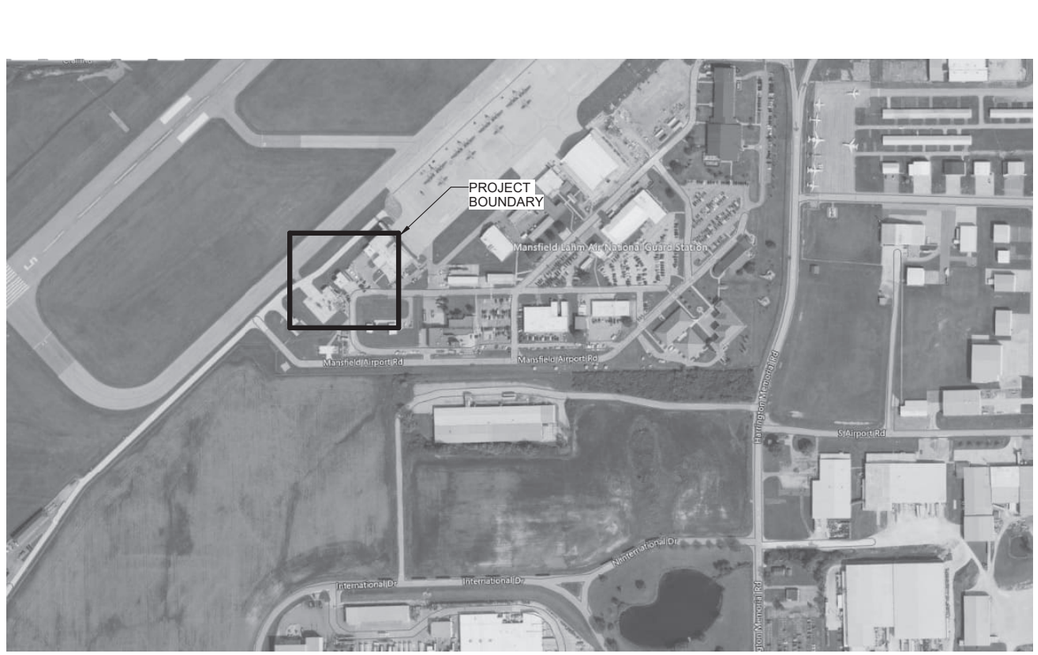

LOCATION MAP (NTS)

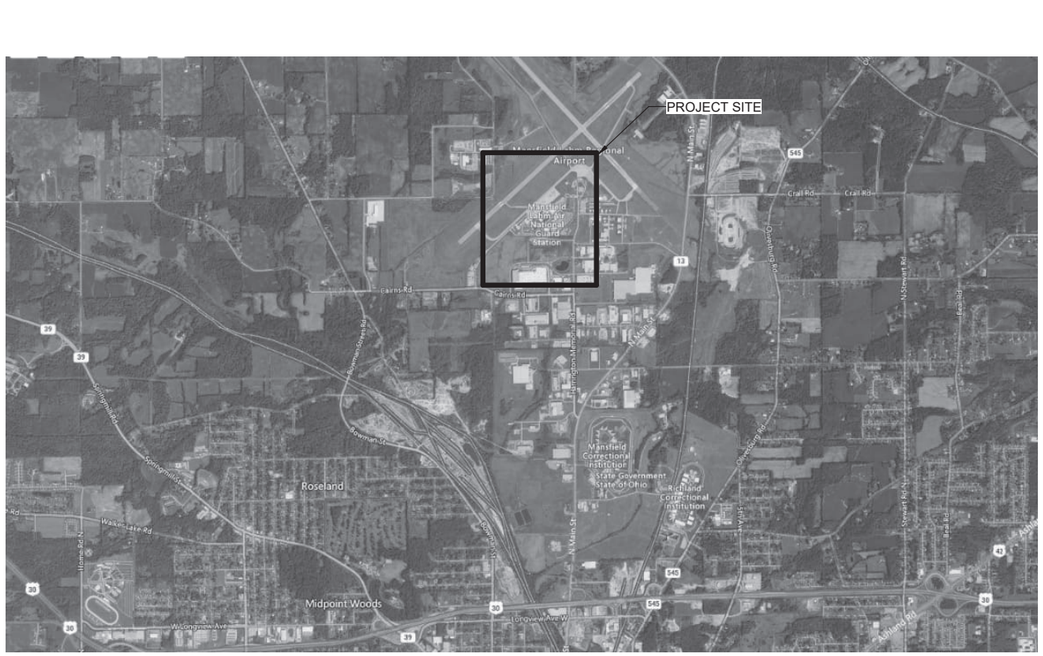

VICINITY MAP

MARK	DESCRIPTION	DATE

DESIGNED BY: M. OSSANNA
DRAWN BY: K. LONBECK
CHECKED BY: D. PEARSON
SUBMITTED BY: D. PEARSON
QTY.
ANSI D

ISSUE DATE: MAY 2026
ANG PROJECT NO.: PBXP222050
CONTRACT NO.: FA8903-21-D-0008
TASK ORDER NO.: W50S8R23F0009

OHIO AIR NATIONAL GUARD
MANSFIELD LAHM AIR NATIONAL GUARD BASE, OH

JACOBS GOVERNMENT SERVICES
2600 MICHELSON SR, STE 500
IRVINE, CA 92612

MANSFIELD LAHM AIR NATIONAL GUARD BASE, OH
REPAIR B403 FOR CYBER
FA877006
COVER SHEET

SHEET ID

G-001

SHEET INDEX

NO	DRAWING INDEX
GENERAL	
G-001	COVER SHEET
G-002	SHEET INDEX
G-003	GENERAL SYMBOLS
GI001	LIFE SAFETY CODE ANALYSIS
GI002	LIFE SAFETY OVERALL FLOOR PLAN
GI103	CIVIL CODE COMPLIANCE SITE PLAN
CIVIL	
C-001	CIVIL GENERAL NOTES, ABBREVIATIONS AND LEGEND
C-002	CIVIL OVERALL SITE ACCESS, STAGING AND HAUL ROUTE
CD101	CIVIL DEMOLITION AND EROSION CONTROL AND SEDIMENT CONTROL PLAN
C-101	CIVIL GRADING AND SITE LAYOUT PLAN
CU101	CIVIL UTILITY PLAN
C-501	CIVIL DETAILS 1
C-502	CIVIL DETAILS 2
STRUCTURAL	
S-001	STRUCTURAL GENERAL NOTES
S-002	STRUCTURAL ABBREVIATIONS
SD101	STRUCTURAL DEMOLITION FLOOR PLAN
SB101	STRUCTURAL FOUNDATION PLAN
SF101	STRUCTURAL CEILING FRAMING PLAN
SF102	STRUCTURAL ROOF FRAMING PLAN
S-501	STRUCTURAL DETAILS
S-502	STRUCTURAL DETAILS
S-510	STRUCTURAL CMU DETAILS
S-520	STRUCTURAL STEEL DETAILS
S-521	TYPICAL CEILING GRID DETAILS
ARCHITECTURAL	
A-001	ARCHITECTURAL GENERAL NOTES AND ABBREVIATIONS
A-002	ARCHITECTURAL ACCESSIBILITY STANDARDS
AD101	ARCHITECTURAL DEMOLITION FLOOR PLAN
AD102	ARCHITECTURAL DEMOLITION ROOF PLAN
AD201	ARCHITECTURAL DEMOLITION ELEVATIONS
A-101	ARCHITECTURAL FLOOR PLAN
A-102	ARCHITECTURAL ROOF PLAN
A-111	ARCHITECTURAL REFLECTED CEILING PLAN
A-201	ARCHITECTURAL BUILDING ELEVATIONS
A-310	ARCHITECTURAL BUILDING SECTIONS
A-401	ARCHITECTURAL WALL SECTIONS
A-450	ARCHITECTURAL ENLARGED PLANS AND ELEVATIONS
A-501	ARCHITECTURAL EXTERIOR DETAILS
A-502	ARCHITECTURAL CEILING DETAILS
A-503	ARCHITECTURAL WALL PENETRATION DETAILS
A-504	ARCHITECTURAL INTERIOR DETAILS
A-505	ARCHITECTURAL INTERIOR DETAILS
A-520	ARCHITECTURAL SECURE AREA NOTES AND DETAILS
A-521	ARCHITECTURAL INTERIOR RF DETAILS
A-522	ARCHITECTURAL SECURE AREA DETAILS
A-523	ARCHITECTURAL SECURE AREA DETAILS
A-524	ARCHITECTURAL SECURE AREA DETAILS
A-525	ARCHITECTURAL SECURE AREA DETAILS
A-526	ARCHITECTURAL SECURE AREA DETAILS
A-527	ARCHITECTURAL SECURE AREA DETAILS
A-601	ARCHITECTURAL DOOR SCHEDULE
A-701	ARCHITECTURAL WALL TYPES SCHEDULE
INTERIORS	
I-001	INTERIORS GENERAL NOTES, SYMBOLS, AND ABBREVIATIONS
IN101	INTERIOR FINISH FLOOR PLAN
IN201	INTERIOR ELEVATIONS
IN202	INTERIOR ELEVATIONS
IN203	INTERIOR ELEVATIONS
IN204	INTERIOR ELEVATIONS
IN501	INTERIOR DETAILS
IN601	ROOM FINISH SCHEDULE AND FINISH LEGEND
IN701	INTERIOR MILLWORK SECTIONS
IN702	INTERIOR MILLWORK SECTIONS
IF101	INTERIORS FF&E PLAN
IF401	WORKSTATION TYPICALS
IF402	DESK TYPICALS
IG101	INTERIORS SIGNAGE PLAN
IG601	INTERIORS SIGNAGE SCHEDULE AND DETAILS
FIRE ALARM	
FA001	FIRE ALARM GENERAL NOTES
FA101	FIRE ALARM OVERALL FLOOR PLAN
FA501	FIRE ALARM DETAILS
FA502	FIRE ALARM MATRIX
FIRE PROTECTION	
FX001	FIRE SPRINKLER GENERAL NOTES
FX101	FIRE SPRINKLER OVERALL FLOOR PLAN
FX301	FIRE SPRINKLER SECTIONS
FX501	FIRE SPRINKLER DETAILS
PLUMBING	
P-001	PLUMBING GENERAL NOTES AND ABBREVIATIONS
PD101	PLUMBING DEMOLITION GROUND FLOOR PLAN
P-101	PLUMBING UNDERGROUND FLOOR PLAN
P-102	PLUMBING OVERALL GROUND FLOOR PLAN
P-401	PLUMBING ENLARGED PLANS
P-501	PLUMBING DETAILS
P-502	PLUMBING DETAILS
P-601	PLUMBING SCHEDULES
P-602	PLUMBING SCHEDULES
P-701	ISOMETRIC - SANITARY SEWER
P-702	ISOMETRIC - DOMESTIC WATER
P-703	ISOMETRIC - STORM DRAIN PIPING
P-801	PLUMBING DOMESTIC COLD WATER SYSTEM ONE-LINE DIAGRAM
MECHANICAL	
M-001	MECHANICAL LEGEND, ABBREVIATIONS, AND NOTES
M-002	MECHANICAL GENERAL NOTES
M-101	MECHANICAL DEMOLITION FLOOR PLAN
M-102	MECHANICAL FLOOR PLAN
M-103	UNDER FLOOR PLAN MECHANICAL
M-301	MECHANICAL SECTIONS
M-501	MECHANICAL DETAILS
M-502	MECHANICAL DETAILS
M-503	MECHANICAL DETAILS
M-601	MECHANICAL SCHEDULES
M-607	MECHANICAL CONTROLS COVER
M-608	MECHANICAL CONTROLS
M-609	MECHANICAL CONTROLS

SHEET INDEX

NO	DRAWING INDEX
ELECTRICAL	
E-001	ELECTRICAL GENERAL NOTES & ABBREVIATIONS
E-002	ELECTRICAL LEGEND
ED101	ELECTRICAL SITE PLAN - DEMOLITION
ED102	ELECTRICAL POWER PLAN - DEMOLITION
ED103	ELECTRICAL LIGHTNING PROTECTION PLAN - DEMOLITION
ES101	ELECTRICAL SITE PLAN
EP101	ELECTRICAL POWER PLAN
EM101	ELECTRICAL POWER PLAN - MECHANICAL AND PLUMBING
EG101	ELECTRICAL GROUNDING PLAN
EG102	ELECTRICAL LIGHTNING PROTECTION PLAN
EL101	ELECTRICAL LIGHTING PLAN
E-401	ELECTRICAL ENLARGED PLAN
E-501	ELECTRICAL DETAILS
E-502	ELECTRICAL GROUNDING DETAILS
E-503	ELECTRICAL EQUIPMENT DETAILS
E-504	ELECTRICAL SECURITY DETAILS
ED601	ELECTRICAL ONE-LINE DIAGRAM - DEMOLITION
E-601	ELECTRICAL ONE-LINE DIAGRAM
E-610	ELECTRICAL EQUIPMENT CONNNECTION SCHEDULE
E-611	ELECTRICAL PANEL SCHEDULES
E-612	ELECTRICAL PANEL SCHEDULES
E-613	ELECTRICAL PANEL SCHEDULES
E-614	ELECTRICAL PANEL SCHEDULES
E-630	ELECTRICAL LIGHTING SCHEDULES
TELECOMMUNICATION	
T-001	TELECOMMUNICATION LEGEND AND GENERAL NOTES
TS101	TELECOMMUNICATION SITE PLAN
TD101	TELECOMMUNICATION DEMOLITION FLOOR PLAN
T-101	TELECOMMUNICATION FLOOR PLAN
T-102	TELECOMMUNICATION CABLE TRAY PLAN
T-301	TELECOMMUNICATION CABINET ELEVATIONS
T-401	TELECOMMUNICATION ENLARGED PLANS
T-402	TELECOMMUNICATION ENLARGED PLANS
T-403	TELECOMMUNICATION ENLARGED PLANS
T-501	DETAILS
T-502	DETAILS
T-503	DETAILS
T-504	DETAILS
T-505	DETAILS
T-601	TELECOMMUNICATION SINGLE LINE DIAGRAMS
T-602	TELECOMMUNICATION SCHEDULES
SECURITY	
TY001	SECURITY LEGEND AND GENERAL NOTES
TY101	SECURITY FLOOR PLAN
TY501	DETAILS
TY502	DETAILS
TY601	SINGLE LINE DIAGRAMS

BID OPTIONS

BASE BID	BID OPTION
FURNITURE, FIXTURES, & EQUIPMENT (FF&E) ARE NOT IN CONTRACT.	PROVIDE FURNITURE, FIXTURES, & EQUIPMENT (FF&E) PER THE COMPREHENIVE INTERIOR DESIGN (CID) SUBMITTAL.
AUDIO/VIDEO (A/V) EQUIPMENT IS NOT INCONTRACT. PROVIDE ONLY PATHWAYS AND BOXES FOR A/V EQUIPMENT. PROVIDE ACCOUSTICAL WALL PANELS IN LIEU OF LED VIDEO WALL PER IN101.	PROVIDE AUDIO/VIDEO EQUIPMENT AND LED VIDEO WALL PER DRAWINGS IF101 AND A-101. PROVIDE ALL POWER AND COMM REQUIRED FOR FULLY FUNCTIONAL A/V EQUIPMENT.
GENERATOR AND TEST LOAD BANK ARE NOT IN CONTRACT.	PROVIDE NEW GENERATOR, FEEDER TO ATS, AND LOAD BANK PER DRAWINGS CU101 AND ES101.

STATE OF OHIO
DENNIS R. PEARSON
PROFESSIONAL ENGINEER
REGISTERED
PROFESSIONAL ENGINEER

MARK	DESCRIPTION	DATE

DESIGNED BY:	ISSUE DATE:
M. OSSANNA	MAY 2026
DRAWN BY:	ANG PROJECT NO.:
K. LONBECK	PBXP222050
CHECKED BY:	CONTRACT NO.:
D. PEARSON	FA8803-21-D-0008
SUBMITTED BY:	TASK ORDER NO.:
D. PEARSON	W50S8R23F0009
SIZE:	
ANSI D	

OHIO AIR NATIONAL GUARD
MANSFIELD LAHM AIR NATIONAL GUARD BASE, OH

JACOBS GOVERNMENT SERVICES
2600 MICHELSON SR. STE 500
IRVINE, CA 92612

MANSFIELD LAHM AIR NATIONAL GUARD BASE, OH
REPAIR B403 FOR CYBER
FA877006
SHEET INDEX

SHEET ID

G-002

TYPE B-3 FINAL

GENERAL PROJECT NOTES

1. BUILDING CODE

THE BUILDING CODE FOR THIS PROJECT IS THE DECEMBER 2024 EDITION OF UFC 1-200-01, DOD BUILDING CODE.

2. SECURED AREAS

THIS PROJECT INCLUDES SECURED AREAS COMPLYING WITH ICD/ICS 705, UFC 4-010-05, AND ANGETL 25-01-02. THE CONTRACTOR IS RESPONSIBLE FOR ALL SECURITY REQUIREMENTS OF SPECIFICATION 01 32 52 AND THE CONSTRUCTION SECURITY PLAN (CSP). REQUIREMENTS INCLUDE BUT ARE NOT LIMITED TO:

- HANDLE AND PROTECT CONSTRUCTION PLANS AND ALL RELATED DOCUMENTS IN ACCORDANCE WITH THE APPROVED CSP.
- INSTALL BARRIERS TO SEGREGATE CONSTRUCTION WORKERS FROM OPERATIONAL ACTIVITIES AND VISUAL OBSERVATION OF UNAUTHORIZED AREAS IN ACCORDANCE WITH THE CSP.
- PROVIDE ACCESS AND ACCOMMODATION FOR PERIODIC SECURITY INSPECTIONS PERFORMED BY THE SITE SECURITY MANAGER (SSM) OR THEIR DESIGNEE.
- PERFORM ALL CONSTRUCTION AND DESIGN WITH U.S. COMPANIES USING U.S. CITIZENS. U.S. COMPANIES USING INDIVIDUALS LAWFULLY ADMITTED FOR PERMANENT U.S. RESIDENCE ARE PERMITTED WITH APPROVAL OF THE ACCREDITING OFFICIAL (AO) AND IN ACCORDANCE WITH THE APPROVED CSP.
- ALL WORKERS AND VEHICLES ARE SUBJECT TO IDENTITY VERIFICATION AND RANDOM SEARCHES BY GOVERNMENT SECURITY PERSONNEL AT SITE ENTRY AND EXIT POINTS.
- PERFORM CORRECTIVE WORK AS NEEDED TO PASS SECURITY TESTS REQUIRED FOR ACCREDITATION OF SECURED AREAS.

3. UNIFIED FACILITIES GUIDE SPECIFICATIONS

THIS PROJECT INCLUDES SPECIFICATIONS BASED ON THE UNIFIED FACILITIES GUIDE SPECIFICATIONS (UFGS). IN THE EVENT OF DISCREPANCIES BETWEEN THE DRAWINGS AND SPECIFICATIONS, THE CONTRACTOR SHALL PROMPTLY NOTIFY THE CONTRACTING OFFICER WHO WILL MAKE A DETERMINATION IN ACCORDANCE WITH THE FEDERAL ACQUISITION REGULATIONS (FAR).

4. SOLE SOURCE JUSTIFICATION AND APPROVAL

THE FOLLOWING SYSTEM VENDORS SHALL BE PROVIDED:

- FIRE PROTECTION EQUIPMENT AND CONTROLS: MONACO
- ELECTRONIC SECURITY SYSTEMS (ESS): ADVANTOR

5. SUBMITTALS

SUBMITTALS AND RESUBMITTALS SHALL BE NUMBERED USING THE SPECIFICATION SECTION ACCORDING TO THE FOLLOWING EXAMPLE:

ORIGINAL SUBMITTAL:	051200-001
FIRST RESUBMITTAL:	051200-001.1
SECOND RESUBMITTAL:	051200-001.2

SUBMITTAL OF SIMILAR INFORMATION (FOR EXAMPLE WELDER CERTIFICATIONS) SHALL BE COMBINED INTO A SINGLE SUBMITTAL TO REDUCE THE NUMBER OF SUBMITTALS THE GOVERNMENT MUST PROCESS.

6. SUSTAINABILITY

THIS PROJECT IS REGISTERED WITH GREEN BUILDING CERTIFICATION, INC (GBCI) AND WILL OBTAIN THIRD PARTY CERTIFICATION FOR SUSTAINABILITY. THE CONTRACTOR IS RESPONSIBLE FOR ALL CERTIFICATION COSTS, GBCI REVIEWS, AND SUBMITTAL OF ALL REQUIRED INFORMATION TO GBCI TO OBTAIN SUSTAINABILITY CERTIFICATION. SEE SPECIFICATION 01 33 29 FOR ADDITIONAL INFORMATION.

7. QUALITY CONTROL PROGRAM

THE CONTRACTOR WILL EXECUTE A QUALITY CONTROL PROGRAM IN ACCORDANCE WITH SPECIFICATION 01 45 00. THIS INCLUDES:

- PREPARATION AND SUBMITTAL OF A QUALITY CONTROL PLAN FOR APPROVAL BY THE GOVERNMENT. THE GOVERNMENT MAY WITHDRAW APPROVAL OF THE PLAN AND REQUIRE A RESUBMITTAL IF THE PLAN DOES NOT RESULT IN COMPLIANT WORK PRODUCTS AND WORKMANSHIP.
- APPOINTMENT OF A QUALITY CONTROL MANAGER (QCM), ALL REQUIRED QUALITY CONTROL SPECIALISTS, AND QUALIFIED TEST LABS. ALL APPOINTMENTS ARE SUBJECT TO APPROVAL BY THE GOVERNMENT.
- WEEKLY QC MEETINGS RUN BY THE QUALITY CONTROL MANAGER.
- EXECUTION OF THE THREE PHASES OF CONTROL INCLUDING THE PREPARATORY, INITIAL, AND FOLLOW-ON PHASES.

8. QUALITY CONTROL INSPECTION AND TESTING

ALL QUALITY CONTROL TESTS AND INSPECTIONS REQUIRED BY THE SPECIFICATIONS AND DRAWINGS ARE THE RESPONSIBILITY OF THE CONTRACTOR. THE GOVERNMENT RESERVES THE RIGHT TO PERFORM THEIR OWN TESTING AND INSPECTIONS AT ANY TIME. GOVERNMENT TESTING AND INSPECTION ARE NOT A SUBSTITUTE FOR THE CONTRACTOR'S QC REQUIREMENTS.

9. SPECIAL INSPECTION

THE CONTRACTOR SHALL PROVIDE AN INDEPENDENT SPECIAL INSPECTION AGENCY TO PERFORM THE SPECIAL INSPECTIONS AND TESTS REQUIRED BY SPECIFICATION 01 45 35. SPECIAL INSPECTIONS AND TESTS ARE IN ADDITION TO THE CONTRACTOR'S QUALITY CONTROL REQUIREMENTS. THE CONTRACTOR SHALL HIRE AND PAY FOR THE SERVICES OF THE SPECIAL INSPECTION AGENCY SUBJECT TO APPROVAL BY THE GOVERNMENT. THE SPECIAL INSPECTION AGENCY WILL REPORT TO THE COR AND SHALL SUBMIT REPORTS TO THE COR AND THE QCM SIMULTANEOUSLY TO MAINTAIN INDEPENDENCE FROM THE CONTRACTOR.

10. BUILDING COMMISSIONING

THE CONTRACTOR SHALL HIRE A COMMISSIONING FIRM AND SPECIALIST (CxA) TO PERFORM THE COMMISSIONING REQUIREMENTS OF SPECIFICATION 01 91 00.15.

11. DEFERRED DESIGN SUBMITTALS

THE CONTRACTOR SHALL HIRE AN ENGINEER REGISTERED IN THE STATE OF OHIO TO PREPARE THE DEFERRED DESIGN SUBMITTALS LISTED BELOW. DEFERRED DESIGN SUBMITTALS SHALL BE STAMPED BY THE PREPARING ENGINEER AND SHALL BE SUBMITTED FOR REVIEW BY THE DESIGNER OF RECORD, AND APPROVAL BY THE COR. THE CONTRACTOR SHALL IDENTIFY DEFERRED DESIGN ACTIVITIES IN THE CONSTRUCTION SCHEDULE.

- ANTITERRORISM ANCHORAGE AND BRACING OF WALL MOUNTED OR SUSPENDED COMPONENTS WEIGHING MORE THAN 31 LBS AND DISTRIBUTION LINES WEIGHING MORE THAN 10 PLF.
- ROOFTOP FALL PROTECTION SYSTEM.
- RAISED ACCESS FLOOR SYSTEMS.

12. FIRE PROTECTION DESIGN

THE CONTRACTOR SHALL HIRE A REGISTERED FIRE PROTECTION ENGINEER TO SERVE AS THE QUALIFIED FIRE PROTECTION ENGINEER (QFPE) DURING CONSTRUCTION IN ACCORDANCE WITH UFC 3-600-01 FIRE PROTECTION ENGINEERING. THE QFPE SHALL APPROVE AND SEAL SHOP DRAWINGS, PERFORM INSPECTIONS, AND WITNESS ACCEPTANCE TESTING.

THE FIRE ALARM AND FIRE SPRINKLER DRAWINGS PROVIDE PERFORMANCE CRITERIA AND CONCEPTUAL LAYOUTS. THE CONTRACTOR SHALL ENGAGE TECHNICIANS WITH THE FOLLOWING MINIMUM QUALIFICATIONS TO PERFORM FINAL LAYOUT DESIGN AND PREPARE SHOP DRAWINGS:

- FIRE SPRINKLER: NICET LEVEL III CERTIFIED TECHNICIAN
- FIRE ALARM: REGISTERED FIRE PROTECTION ENGINEER OR NICET LEVEL IV CERTIFIED TECHNICIAN.

THE QFPE SHALL REVIEW, APPROVE, AND SEAL THE SHOP DRAWINGS PRIOR TO SUBMITTAL TO THE GOVERNMENT FOR FINAL REVIEW AND APPROVAL.

THE CONTRACTOR SHALL IDENTIFY FIRE PROTECTION DESIGN ACTIVITIES IN THE CONSTRUCTION SCHEDULE.

13. DIRECT DIGITAL CONTROLS

THE CONTRACTOR SHALL HIRE A DIRECT DIGITAL CONTROLS CONTRACTOR TO DESIGN THE CONTROLS SYSTEM AND PREPARE DESIGN DRAWINGS IN ACCORDANCE WITH SPECIFICATION 23 09 00 FOR REVIEW AND APPROVAL BY THE GOVERNMENT.

THE CONTRACTOR SHALL IDENTIFY CONTROL SYSTEM DESIGN ACTIVITIES IN THE CONSTRUCTION SCHEDULE.

14. CYBER SECURITY

CONTROL SYSTEMS SHALL COMPLY WITH UFC 4-010-06 CYBERSECURITY OF FACILITY-RELATED CONTROL SYSTEMS. SEE DIVISION 25 SPECIFICATIONS FOR CYBER SECURITY REQUIREMENTS FOR THE FOLLOWING CONTROL SYSTEMS:

- FIRE ALARM CONTROLS
- ELECTRONIC SECURITY SYSTEMS (ESS)
- DIRECT DIGITAL CONTROL SYSTEM

15. DEMOLITION

DEMOLITION DRAWINGS ARE PREPARED BASED ON LIMITED SITE VISITS AND AS-BUILT DRAWINGS. THE CONTRACTOR IS RESPONSIBLE FOR ALL DEMOLITION REQUIRED TO CONSTRUCT THE COMPLETE AND OPERATIONAL FACILITY SHOWN IN THE DESIGN DOCUMENTS.

SYMBOLS LEGEND

VIEW TITLE

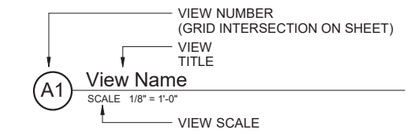

GRAPHIC SCALE

LEVEL HEADS

MATCHLINE REFERENCE

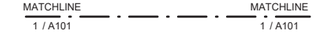

NORTH ARROW

EXTERIOR ELEVATION REFERENCE

INTERIOR ELEVATION REFERENCE

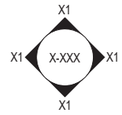

FULL BUILDING SECTION REFERENCE

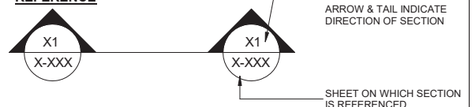

PARTIAL BUILDING SECTION REFERENCE

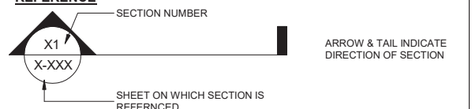

WALL SECTION REFERENCE

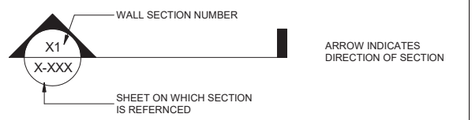

DETAIL CALLOUT REFERENCE

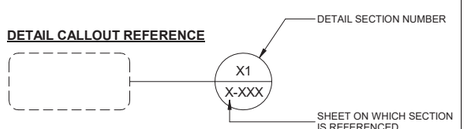

GRID BUBBLES

SYMBOLS LEGEND

SHEET NUMBER

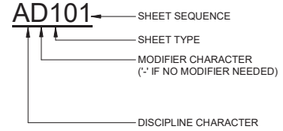

ROOM TAG

CEILING TAG

EXPOSED CEILING TAG

KEYNOTE

REVISION TAG

DOOR TAG

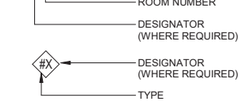

WINDOW / LOUVER TAG

WALL/ STOREFRONT/ CURTAIN WALL TAG

SPOT ELEVATIONS

PLAN NORTH

STATE OF OHIO
DENNIS R. PEARSON
PROFESSIONAL ENGINEER
REGISTERED
PROFESSIONAL ENGINEER

MARK	DESCRIPTION	DATE

ISSUE DATE: MAY 2026
ANG PROJECT NO.: PBXP222050
CONTRACT NO.: FA8903-21-D-0008
TASK ORDER NO.: W50S8R23F0009

DESIGNED BY: R. SMITH
DRAWN BY: E. NEWSUM
CHECKED BY: S. WINSTEAD
SUBMITTED BY: D. PEARSON
QA/QC: ANSI D

OHIO AIR NATIONAL GUARD
MANSFIELD LAHM AIR NATIONAL GUARD BASE, OH

JACOBS GOVERNMENT SERVICES
2600 MICHELSON SR. STE 500
IRVINE, CA 92612

MANSFIELD LAHM AIR NATIONAL GUARD BASE, OH
REPAIR B403 FOR CYBER
FA877006
GENERAL NOTES & SYMBOLS

SHEET ID
G-003

APPLICABLE CODES AND STANDARDS

APPLICABLE CODES AND STANDARDS	EDITION
UFC 1-200-01 - DoD BUILDING CODE	CHANGE 4, 17 DECEMBER 2024
UFC 3-600-01 - FIRE PROTECTION ENGINEERING FOR FACILITIES	CHANGE 6, 06 MAY 2021
UFC 4-010-01 - DoD MINIMUM ANTITERRORISM STANDARDS FOR BUILDINGS	CHANGE 3, 24 MAY 2024
UFC 4-021-01 - DESIGN AND O&M: MASS NOTIFICATION SYSTEMS	CHANGE 1, 01 JANUARY 2010
UFC 4-010-05 - SECURE AREA PLANNING, DESIGN, AND CONSTRUCTION	26 MAY 2023
NFPA 1 - FIRE CODE	2024
NFPA 10 - STANDARD FOR PORTABLE FIRE EXTINGUISHERS	2022
NFPA 13 - STANDARD FOR THE INSTALLATION OF SPRINKLER SYSTEMS	2025
NFPA 24 - STANDARD FOR THE INSTALLATION OF PRIVATE FIRE SERVICE MAINS AND THEIR APPURTENANCES	2025
NFPA 70 - NATIONAL ELECTRICAL CODE	2023
NFPA 72 - NATIONAL FIRE ALARM AND SIGNALING CODE	2025
NFPA 80 - STANDARD FOR FIRE DOORS AND OTHER OPENING PROTECTIVES	2025
NFPA 90A - STANDARD FOR THE INSTALLATION OF AIR-CONDITIONING AND VENTILATING SYSTEMS	2024
NFPA 101 - LIFE SAFETY CODE (LSC)	2024
NFPA 110 - STANDARD FOR EMERGENCY AND STANDBY POWER SYSTEMS	2025
NFPA 170 - STANDARD FOR FIRE SAFETY AND EMERGENCY SYMBOLS	2024
NFPA 220 - STANDARD ON TYPES OF BUILDING CONSTRUCTION	2024
INTERNATIONAL BUILDING CODE (IBC)	2024
TSFPEWG G 3-600-01.01-18	CHANGE 1, 21 APRIL 2021
ANG ETL 24-01-03 FIRE PROTECTION DESIGN GUIDANCE	31 MARCH 2024

BUILDING REHABILITATION (UFC 3-600-01 SECTION 34)

CATEGORY PER NFPA 101 CHAPTER 43	REQUIREMENTS
RECONSTRUCTION/CHANGE OF USE	AREA WILL COMPLY WITH REQUIREMENTS FOR NEW CONSTRUCTION PER NFPA 101 AND UFC 3-600-01 AS REQUIRED BY UFC 3-600-01 34-1.3.1

IBC SUMMARY

OCCUPANCY CLASSIFICATION	REFERENCE
GROUP B (IBC)	IBC SECTION 304

NOTE: ALL STORAGE OCCUPANCIES IN BUILDING WILL BE CONSIDERED ACCESSORY (IBC 311.1.1) TO THE MAIN OCCUPANCY AND, THEREFORE, CLASSIFIED AS GROUP B.

BUILDING CONSTRUCTION TYPE	REFERENCE
TYPE II-B (IBC)	IBC SECTION 602

FIRE-RESISTANCE RATING REQUIREMENTS (TYPE II-B CONSTRUCTION)	REQUIRED	PROVIDED	REFERENCE
PRIMARY STRUCTURAL FRAME	0 - HOUR	0 - HOUR	IBC SECTION 601
FLOOR CONSTRUCTION AND ASSOCIATED SECONDARY MEMBERS	0 - HOUR	0 - HOUR	IBC SECTION 601
ROOF CONSTRUCTION AND ASSOCIATED SECONDARY MEMBERS	0 - HOUR	0 - HOUR	IBC SECTION 601
WALLS			
EXTERIOR BEARING WALLS	0 - HOUR	0 - HOUR	IBC SECTION 601
INTERIOR BEARING WALLS	0 - HOUR	0 - HOUR	IBC SECTION 601
EXTERIOR NONBEARING WALLS - BASED ON FIRE SEPARATION DISTANCE = X X ≥ 10 FT	0 - HOUR	0 - HOUR	IBC TABLE 705.5

BUILDING HEIGHT AND AREA - (SPRINKLERED)	ALLOWABLE	ACTUAL	REFERENCE
BUILDING AREA (SF)	92,000 (S1)	5,850	IBC TABLE 506.2
BUILDING HEIGHT (NO. OF STORIES):	4	1	IBC TABLE 504.4
BUILDING HEIGHT (FT):	75	18	IBC TABLE 504.3

FEATURES OF FIRE PROTECTION

SYSTEM	REQUIRED?	PROVIDED?	GOVERNING CODE/STANDARD
AUTOMATIC SPRINKLER	YES	YES	NFPA 13 (2025) & UFC 3-600-01
FIRE PUMP	NO	NO	N/A
FIRE HYDRANTS	YES	YES	NFPA 1 (2024) & UFC 3-600-01
FIRE ALARM	YES	YES	NFPA 72 (2025) & UFC 3-600-01
MASS NOTIFICATION	YES	YES	NFPA 72 (2025), UFC 3-600-01, & UFC 4-021-01
FIRE EXTINGUISHER	YES	YES	NFPA 1, NFPA 101, & UFC 3-600-01
STANDPIPE	NO	NO	N/A
SMOKE EXHAUST	YES	YES	NFPA 92, UFC 3-600-01, & TSFPEWG G 3-600-01.01-18

LIFE SAFETY CODE SUMMARY

SYSTEMS:
WET PIPE SYSTEM DESIGNED IN ACCORDANCE WITH UFC 3-600-01 & NFPA 13.
FIRE ALARM/MASS NOTIFICATION SYSTEM DESIGNED IN ACCORDANCE WITH UFC 3-600-01, TSFPEWG G 3-600-01.01-18, UFC 4-021-01, AND NFPA 72.

OCCUPANCY CLASSIFICATION — REFERENCE: NFPA 101 6.1.11
BUSINESS (NFPA 101)

NOTES:
1. ALL STORAGE OCCUPANCIES IN BUILDING WILL BE CONSIDERED INCIDENTAL (NFPA 101 6.1.14.1.3) TO THE MAIN OCCUPANCY AND THEREFORE, CLASSIFIED AS BUSINESS.
2. LABS SPACES ARE COMPUTER LABS AND WILL BE CLASSIFIED AS BUSINESS OCCUPANCIES.

CLASSIFICATION OF HAZARD OF CONTENTS — REFERENCE: NFPA 101 6.2.2.3
ORDINARY HAZARD CONTENTS

OCCUPANT LOAD FACTORS BASED ON USE	OCCUPANT LOAD FACTOR (SF/OCC)	REFERENCE
ASSEMBLY	15 NET	NFPA 101 TABLE 7.3.1.2
BUSINESS	150 GROSS	NFPA 101 TABLE 7.3.1.2
BUILDING EQUIPMENT SPACES	500 GROSS	UFC 3-600-01 TABLE 10-1
IT EQUIPMENT SPACES	300 GROSS	UFC 3-600-01 TABLE 10-1
CONCENTRATED BUSINESS	50 GROSS	NFPA 101 TABLE 7.3.1.2

MEANS OF EGRESS CAPACITY	CAPACITY FACTOR (IN/OCC)	REFERENCE
LEVEL COMPONENTS AND RAMPS	0.2	NFPA 101 TABLE 7.3.3.1

EXIT WIDTH	MINIMUM REQUIRED CLEAR WIDTH	PROVIDED CLEAR WIDTH	REFERENCE
DOOR CLEAR WIDTH	32 INCHES	34 INCHES OR GREATER	NFPA 101 SECTION 7.2.1.2.3.2.

FIRE RESISTANCE RATINGS REQUIREMENTS	REQUIRED	PROVIDED	REFERENCE
TEF AND LABS	1 HOUR	1 HOUR	TSFPEWG 3-600-01.01 -18 SECTION 3-2.1
ELEC ROOM	1 HOUR OR SMOKE PARTITION	1 HOUR	NFPA 101 SECTION 8.7

MINIMUM NUMBER OF REQUIRED EXITS	REQUIRED	PROVIDED	REFERENCE
NUMBER OF REQUIRED EXITS	2*	2	NFPA 101 7.4.1.1
*BASED ON CALCULATED OCCUPANT LOAD OF 123			

ARRANGEMENT OF MEAN OF EGRESS FOR BUSINESS OCCUPANCY	REQUIRED (FT)	PROVIDED (FT)	REFERENCE
TRAVEL DISTANCE	300	122	NFPA 101 38.2.6.3
COMMON PATH OF TRAVEL	100	65	NFPA 101 38.2.5.2.1
DEAD-END CORRIDOR	50	21	NFPA 101 38.2.5.3.1

ILLUMINATION OF MEANS OF EGRESS — REFERENCE: NFPA 101 SECTION 7.8.1.1.
ILLUMINATION OF THE MEANS OF EGRESS WILL BE PROVIDED WITHIN THE EXIT ACCESS AND EXIT DISCHARGE. THE EXIT ACCESS WILL INCLUDE ONLY CORRIDORS AND AISLES LEADING TO AN EXIT. THE EXIT DISCHARGE WILL INCLUDE AISLES, CORRIDORS, AND WALKWAYS LEADING TO A PUBLIC WAY

FLOORS AND WALKING SURFACES WITHIN AN EXIT AND WITHIN PORTIONS OF THE EXIT ACCESS AND EXIT DISCHARGE WILL BE ILLUMINATED AS FOLLOWS: — NFPA 101 SECTION 7.8.1.3
- FLOORS AND WALKING SURFACES (MEASURED AT THE FLOOR): 1 FT-CANDLE

FAILURE OF ANY SINGLE LIGHTING UNIT WILL NOT RESULT IN ILLUMINATION LEVEL OF LESS THAN 0.2 FT-CANDLE IN ANY DESIGNATED AREA. — NFPA 101 SECTION 7.8.1.4

EMERGENCY LIGHTING WITHIN THE MEANS OF EGRESS — REFERENCE: NFPA 101 SECTION 7.9.1.2
EMERGENCY LIGHTING WITHIN THE MEANS OF EGRESS WILL BE PROVIDED WITHIN THE EXIT ACCESS AND EXIT DISCHARGE. THE EXIT ACCESS WILL INCLUDE ONLY CORRIDORS, AND AISLES LEADING TO AN EXIT. THE EXIT DISCHARGE WILL INCLUDE AISLES, CORRIDORS, AND WALKWAYS LEADING TO A PUBLIC WAY.

WHERE MAINTENANCE OF ILLUMINATION DEPENDS ON CHANGING FROM ONE ENERGY SOURCE TO ANOTHER, A DELAY OF NOT MORE THAN 10 SECONDS IS PERMITTED. — NFPA 101 SECTION 7.9.1.3

EMERGENCY LIGHTING WILL BE PROVIDED FOR A MINIMUM OF 1-1/2 HOURS IN THE EVENT OF FAILURE OF NORMAL LIGHTING — NFPA 101 SECTION 7.9.2.1

EMERGENCY LIGHTING WILL PROVIDE AN INITIAL ILLUMINATION THAT IS NOT LESS THAN AN AVERAGE OF 1 FT-CANDLE AND, AT ANY POINT, NOT LESS THAN .1 FT-CANDLE, MEASURED ALONG THE MEANS OF EGRESS AT FLOOR LEVEL. — NFPA 101 SECTION 7.9.2.1.1

MARKING OF THE MEANS OF EGRESS — REFERENCE: NFPA 101 SECTION 7.10.1.2.1
EXITS WILL BE MARKED BY AN APPROVED EXIT SIGN THAT IS READILY VISIBLE FROM ANY DIRECTION OF EXIT ACCESS, OTHER THAN MAIN EXTERIOR EXIT DOORS THAT ARE CLEARLY IDENTIFIABLE AS EXITS.

EXIT SIGNS WILL BE PLACED SO THAT NO POINT IN AN EXIT ACCESS CORRIDOR IS IN EXCESS OF 100 FT OR THE RATED VIEWING DISTANCE OF THE SIGN — NFPA 101 SECTION 7.10.1.5.2

MEANS OF EGRESS COMPONENTS — REFERENCE
LOCKS, LATCHES, AND ALARM DEVICES
DOORS WILL BE READILY OPEN FROM THE EGRESS SIDE WHENEVER THE BUILDING IS OCCUPIED — NFPA 101 TABLE 7.2.1.5.1

LOCKS WILL NOT REQUIRE THE USE OF A KEY, TOOL, OR SPECIAL KNOWLEDGE OR EFFORT FOR OPERATION FROM THE EGRESS SIDE — NFPA 101 TABLE 7.2.1.5.3

LATCHES WILL BE PROVIDED WITH A RELEASING DEVICE THAT HAS AN OBVIOUS METHOD OF OPERATION AND READILY OPERATED UNDER ALL LIGHTING CONDITIONS — NFPA 101 TABLE 7.2.1.5.10

DOORS MUST SWING IN THE DIRECTION OF EGRESS TRAVEL FOR OCCUPANT LOADS GREATER THAN 50. — NFPA 101 SECTION 7.2.1.4.2

MINIMUM REQUIRED INTERIOR FINISH OCCUPANCY	REQUIRED IN EXIT ACCESS CORRIDORS	REQUIRED IN OTHER SPACE	PROVIDED	REFERENCE
BUSINESS	CLASS C	CLASS C	CLASS A, B, AND C	NFPA 101 A.10.2.2

LABS AND TEF ROOM WILL HAVE INTERIOR FINISH RATINGS OF CLASS A OR B AND INTERIOR FLOOR FINISH RATINGS OF CLASS I OR II IN ACCORDANCE WITH TSFPEWG G 3-600-01.01-18 2-3.

INTERIOR FINISHES, IN ALL AREAS WHERE CLASS C IS REQUIRED, WILL HAVE A SMOKE DEVELOPMENT INDEX LESS THAN 450 AND A FLAME SPREAD INDEX LESS THAN 200 WHEN TESTED IN ACCORDANCE WITH ASTM E84 OR UL 723, AS REQUIRED BY NFPA 101 SECTION 10.2.3.3.

SMOKE CONTROL
AUTOMATIC SMOKE EXHAUST IS REQUIRED FOR ELECTRONIC EQUIPMENT AREAS PER TSFPEWG 3-600-01.1-18 SECTION 2-13.

STATE OF OHIO — EDWARD PITTS — E-92970 — 05-08-26 — REGISTERED PROFESSIONAL ENGINEER

MARK	DESCRIPTION	DATE

DESIGNED BY: E. PITTS
DRAWN BY: B. MITCHELL
CHECKED BY: B. BUSS
SUBMITTED BY: D. PEARSON
SIZE: ANSI D
ISSUE DATE: MAY 2026
ANG PROJECT NO.: PBXP222050
CONTRACT NO.: FA8803-21-D-0008
TASK ORDER NO.: W50SBR23F0009

OHIO AIR NATIONAL GUARD
MANSFIELD LAHM AIR NATIONAL GUARD BASE, OH

JACOBS GOVERNMENT SERVICES
2600 MICHELSON SR. STE 500
IRVINE, CA 92812

MANSFIELD LAHM AIR NATIONAL GUARD BASE, OH
REPAIR B403 FOR CYBER
FA877006
LIFE SAFETY CODE ANALYSIS

SHEET ID
GI001

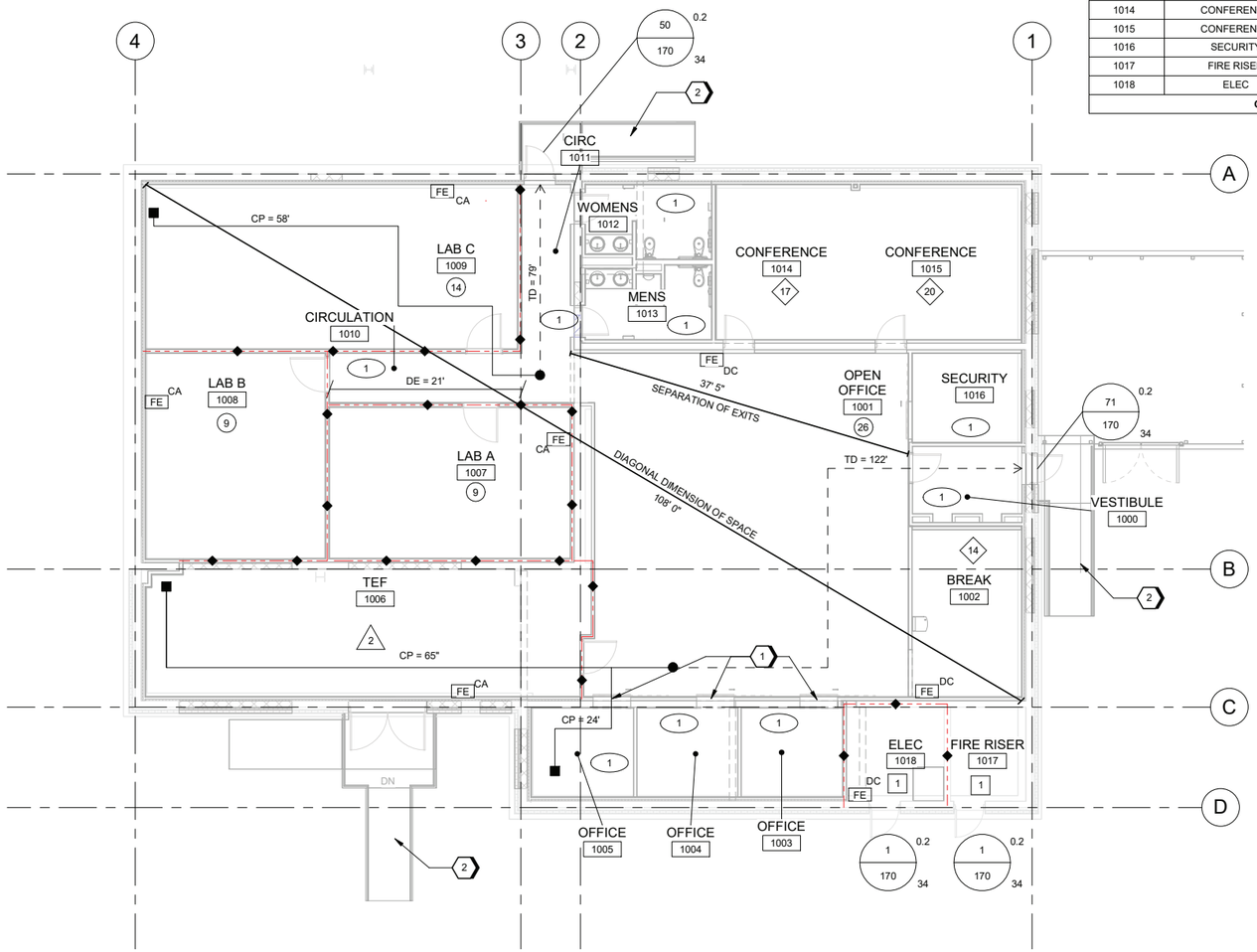

OCCUPANT LOAD TABLE

ROOM ID	ROOM NAME	AREA (SF)	OCCUPANT LOAD FACTOR	OCCUPANT LOAD
1000	VESTIBULE	86	1:150	1
1001	OPEN OFFICE	1267	1:50	26
1002	BREAK	205	1:15	14
1003	OFFICE	102	1:150	1
1004	OFFICE	102	1:150	1
1005	OFFICE	103	1:150	1
1006	TEF	615	1:300	3
1007	LAB A	412	1:50	9
1008	LAB B	416	1:50	9
1009	LAB C	690	1:50	14
1010	CIRCULATION	140	1:150	1
1011	CIRC	91	1:150	1
1012	WOMENS	122	1:150	1
1013	MENS	123	1:150	1
1014	CONFERENCE	245	1:15	17
1015	CONFERENCE	293	1:15	20
1016	SECURITY	110	1:150	1
1017	FIRE RISER	79	1:500	1
1018	ELEC	104	1:500	1
OCCUPANT LOAD TABLE				123

GENERAL SHEET NOTES

A. REFER TO GL101 FOR GENERAL NOTES AND CODE ANALYSIS.

B. REFER TO EL101 FOR EXIT SIGNAGE.

SHEET KEYNOTES

1 HORIZONTAL SLIDING DOOR ASSEMBLY PERMITTED FOR SPACES WITH OCCUPANT LOADS LESS THAN 10 PER NFPA 101 SECTION 7.2.1.4.1(4)

2 1:12 RAMP SLOPE

LIFE SAFETY LEGEND

PATH OF EXIT TRAVEL WITH DISTANCES FROM SELECTED REMOTE LOCATIONS TO NEAREST EXIT. INCLUDES; TOTAL TRAVEL DISTANCE (TD) AND COMMON PATH OF TRAVEL(CP).

146' TD 75' CP

INDICATES START OF CP & TD

INDICATES END OF CP

INDICATES POINT OF EXIT

X / Y / Z — W = EGRESS CAPACITY FACTOR (IN/PERSON); X = OCCUPANTS USING EXIT (PERSONS); Y = EXIT CAPACITY (PERSONS); Z = EXIT CLEAR WIDTH (IN)

1 HOUR FIRE RATED BARRIER

FE CA — CLEAN AGENT FIRE EXTINGUISHER

FE DC — DRY CHEMICAL FIRE EXTINGUISHER

OCCUPANCY CLASSIFICATION

LABEL	OCCUPANCY/ USE	LOAD FACTOR SF/PERSON
XX	OCCUPANCY: BUSINESS USE: ASSEMBLY	15 NET
XX	OCCUPANCY: BUSINESS USE: CONCENTRATED BUSINESS	50 GROSS
XX	OCCUPANCY: BUSINESS USE: BUSINESS	150 GROSS
XX	OCCUPANCY: BUSINESS USE: IT EQUIPMENT SPACES	300 GROSS
XX	OCCUPANCY: BUSINESS USE: BUILDING EQUIPMENT SPACES	500 GROSS

GRAPHIC SCALE(S)

8 6 4 2 0 8 16

SCALE: 1/8"=1'-0"

PLAN NORTH

A1 LIFE SAFETY GROUND FLOOR PLAN

SCALE 1/8" = 1'-0"

STATE OF OHIO
EDWARD PITTS
E-92970
05-08-26
REGISTERED
PROFESSIONAL ENGINEER

MARK	DESCRIPTION	DATE

DESIGNED BY: E. PITTS
DRAWN BY: B. MITCHELL
CHECKED BY: B. BUSS
SUBMITTED BY: D. PEARSON
SIZE: ANSI D

ISSUE DATE: MAY 2026
ANG PROJECT NO.: PBXP222050
CONTRACT NO.: FA8903-21-D-0008
TASK ORDER NO.: W50S8R23F0009

OHIO AIR NATIONAL GUARD
MANSFIELD LAHM AIR NATIONAL GUARD BASE, OH

JACOBS GOVERNMENT SERVICES
2600 MICHELSON SR, STE 500
IRVINE, CA 92612

MANSFIELD LAHM AIR NATIONAL GUARD BASE, OH
REPAIR B403 FOR CYBER
FA877006
LIFE SAFETY OVERALL FLOOR PLAN

SHEET ID
GI002

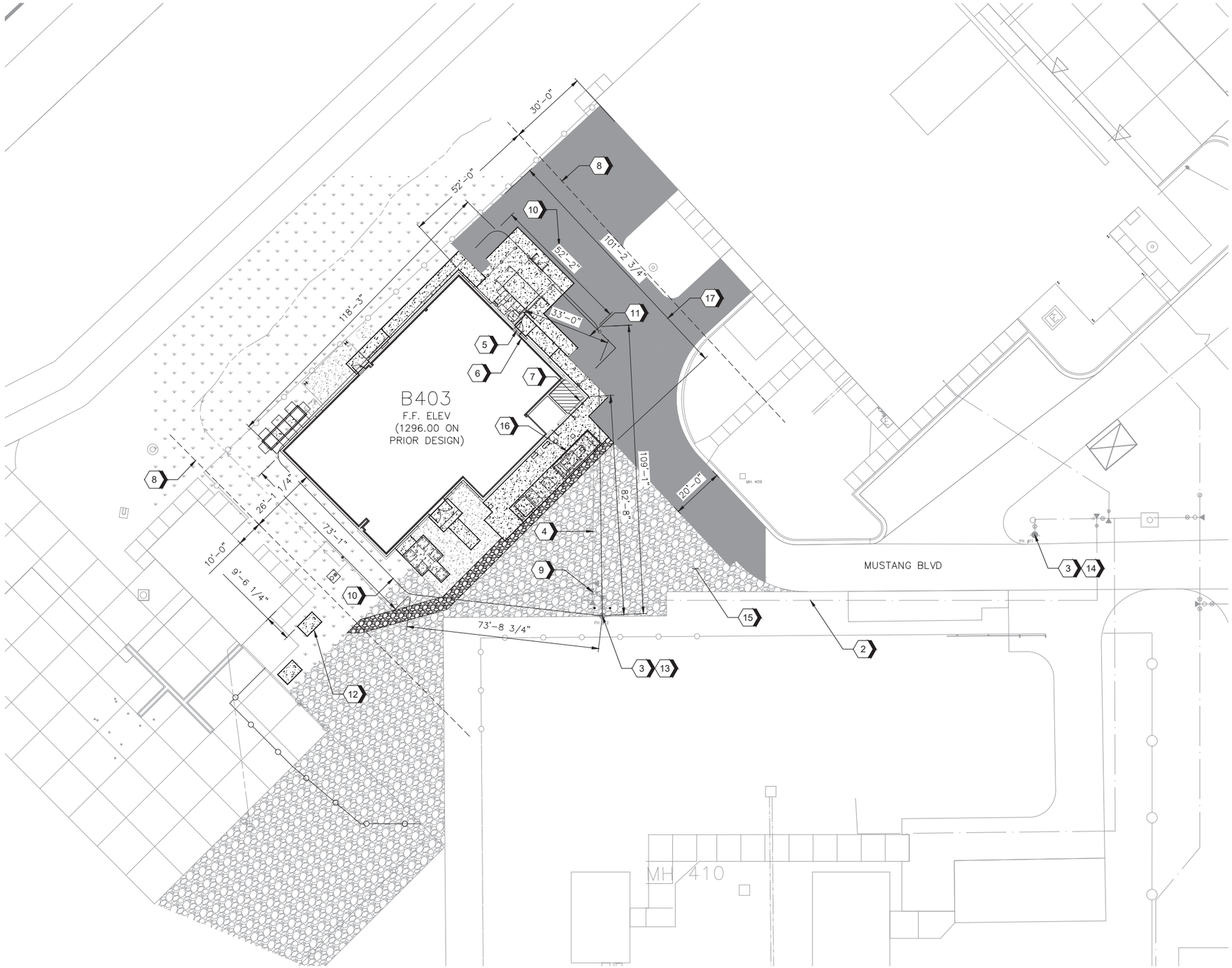

A1 CODE COMPLIANCE SITE PLAN

SCALE: 1" = 20'

SHEET KEYNOTES

1. NOT USED.
2. EXISTING FIRE WATER LINE.
3. EXISTING FIRE HYDRANT. ONLY ONE FIRE HYDRANT IS REQUIRED FOR THIS FACILITY BECAUSE THE HYDRANT IS WITHIN 150' OF FIRE DEPARTMENT CONNECTION, 350' OF ALL EXTERIOR PORTIONS OF THE BUILDING AND IS CAPABLE OF PROVIDING THE REQUIRED FIRE FLOW.
4. EXISTING 8" FIRE SERVICE LATERAL.
5. INTENDED FIRE DEPARTMENT MAIN ACCESS.
6. KNOX BOX LOCATION.
7. FIRE DEPARTMENT CONNECTION LOCATION.
8. ASSUMED LOT LINE.
9. EXISTING POST INDICATOR VALVE.
10. ALL PORTIONS OF BUILDING EXTERIORS ARE WITHIN 350' OF HYDRANT.
11. FIRE DEPARTMENT ACCESS WITHIN 33' OF BUILDING ENTRANCE.
12. TRANSFORMER USES LESS THAN 10,000 GALLONS OF LESS FLAMMABLE LIQUID AND IS MORE THAN 5' FROM BUILDING PER UFC 3-600-01 TABLE 4-4.
13. HYDRANT WAS USED AS FLOW HYDRANT DURING FLOW TEST.
14. GAUGE HYDRANT IS ABOUT 200' EAST FROM FLOW HYDRANT AND IS AT AN ELEVATION OF 2' ABOVE FINISHED FLOOR.
15. GRAVEL AREA TO BE USED AS A FIRE DEPARTMENT APPARATUS TURN AROUND AS APPROVED BY FIRE DEPARTMENT.
16. GENERATOR IS AT LEAST 5' FROM BUILDING IN ACCORDANCE WITH NFPA 37 4.1.4 REQUIREMENT FOR GENERATORS AND NFPA 30 22.4 REQUIREMENT FOR FUEL TANKS WITH EMERGENCY VENTING AND LESS THAN 30,000 GALLONS OF FUEL.
17. NO TURN AROUND IS REQUIRED FOR DEAD-END ACCESS ROUTES LESS THAN 150' PER NFPA 1 SECTION 18.2.3.5.4.

GRAPHIC SCALE(S)

0 20' 40' 60'

SCALE: 1" = 20'

PLAN NORTH

STATE OF OHIO
EDWARD PITTS
E-92970
05-08-26
REGISTERED PROFESSIONAL ENGINEER

MARK	DESCRIPTION	DATE

DESIGNED BY: E. PITTS
DRAWN BY: J. OYE
CHECKED BY: I. NATH
SUBMITTED BY: D. PEARSON
SIZE: ANSI D
ISSUE DATE: MAY 2026
ANG PROJECT NO.: PBXP222050
CONTRACT NO: FA8903-21-D-0008
TASK ORDER NO: W50S8R23F0009

OHIO AIR NATIONAL GUARD
MANSFIELD LAHM AIR NATIONAL GUARD BASE, OH

JACOBS GOVERNMENT SERVICES
2600 MICHELSON DR., STE 500
IRVINE, CA 92612

MANSFIELD LAHM AIR NATIONAL GUARD BASE, OH
REPAIR B403 FOR CYBER
FA877005

LIFE SAFETY
CODE COMPLIANCE SITE PLAN

SHEET ID
GI103

TYPE B-3 FINAL

CIVIL GENERAL NOTES

A. EXISTING SITE FEATURES, UTILITIES, AND BASE MAPPING SHOWN WERE OBTAINED FROM CAD FILES PROVIDED BY THE MANSFIELD-LAHM ANG. NO TOPOGRAPHIC SURVEY WAS PERFORMED. EXISTING CONDITIONS MAY VARY FROM THOSE SHOWN ON THESE PLANS. THE CONTRACTOR SHALL VERIFY EXISTING CONDITIONS AND ADJUST WORK PLAN ACCORDINGLY PRIOR TO BEGINNING CONSTRUCTION.

B. MAINTAIN, RELOCATE OR REPLACE EXISTING MONUMENTS WHICH ARE DISTURBED OR DESTROYED DURING CONSTRUCTION. PERFORM THE WORK TO PRODUCE THE SAME LEVEL OF ACCURACY AS THE ORIGINAL MONUMENT(S) IN A TIMELY MANNER AND AT THE CONTRACTOR'S EXPENSE.

C. EXISTING SITE FEATURES ARE SHOWN AS SCREENED LINES AND PROPOSED SITE FEATURES ARE SHOWN AS DARK LINES.

CIVIL CONSTRUCTION NOTES

A. PROJECT TESTING: ALL TESTING REQUIRED WILL BE CONDUCTED BY THE CONTRACTOR, AS SPECIFIED.

B. ALL DISTURBED SURFACES SHALL BE REPLACED IN KIND. NO EXPOSED SOIL IS ALLOWED ON BASE.

C. CONTRACTOR TO FIELD VERIFY DEPTH AND LOCATION OF ALL UNDERGROUND UTILITIES PRIOR TO EXCAVATION AND PROTECT ALL EXISTING UTILITIES NOT IDENTIFIED FOR REMOVAL DURING CONSTRUCTION. UTILITIES SHOWN ON THE DRAWINGS ARE BASED ON THE BEST AVAILABLE INFORMATION, AND MAY NOT REFLECT THE ACTUAL FIELD CONDITIONS OR LOCATIONS OF UNDERGROUND STRUCTURES OR EXISTING UTILITIES. THE CONTRACTOR IS RESPONSIBLE FOR ANY AND ALL DAMAGE TO EXISTING UTILITIES.

D. THE CONTRACTOR TO NOTIFY MANSFIELD ANG FOURTEEN (14) FULL BUSINESS DAYS PRIOR TO PLANNED EXCAVATION, AND OBTAIN A DIG PERMIT BEFORE BEGINNING WORK.

E. THE CONTRACTOR IS RESPONSIBLE FOR LOCATING ALL UTILITIES MARKED OR UNMARKED BEFORE COMMENCING CONSTRUCTION. THE CONTRACTOR TO USE EXTREME CARE IN ALL EXCAVATIONS TO AVOID CONFLICTS WITH ALL UTILITIES MARKED OR UNMARKED. THE CONTRACTOR AGREES TO PRESERVE ANY AND ALL UTILITIES AND STRUCTURES WITHIN TWO FEET OF FIELD MARKED UNDERGROUND UTILITIES.

F. CONTRACTOR MUST NOTIFY THE COMMUNICATIONS SQUADRON PRIOR TO REMOVING ANY COMMUNICATIONS EQUIPMENT (FIBER OPTIC, COPPER CABLE, ETC.) OR IF ANY TYPE OF COMMUNICATIONS EQUIPMENT SHOULD NEED TO BE RELOCATED BECAUSE OF CONSTRUCTION.

G. THE CONTRACTOR IS RESPONSIBLE FOR MAINTAINING THE NORMAL OPERATING FUNCTIONS OF ALL UTILITY SYSTEMS THROUGH THE CONSTRUCTION SITE DURING THE ENTIRE DURATION OF THE PROJECT, TO THE EXTENT FEASIBLE. THE CONTRACTOR TO COORDINATE WITH CONTRACTING OFFICER REQUIREMENTS FOR SHUT DOWN AND DURATION LIMITS OF SHUT DOWN.

H. ELEVATIONS GIVEN ARE TO FINISHED GRADE UNLESS OTHERWISE NOTED.

I. SLOPE UNIFORMLY BETWEEN CONTOURS OR SPOT ELEVATIONS SHOWN.

CIVIL SYMBOLS

EXISTING

- FIRE HYDRANT
- POST INDICATOR VALVE
- VALVE
- SANITARY SEWER MANHOLE
- PLUG
- POST OR BOLLARD
- TELECOM MANHOLE
- ELECTRICAL TRANSFORMER
- LIGHTNING PROTECTION
- CLEANOUT
- EDGE OF PAVEMENT
- CURB
- CURB AND GUTTER
- W — POTABLE WATER LINE
- G — NATURAL GAS LINE
- COMM — TELECOMMUNICATION
- E-BUR — BURIED ELECTRICAL
- OHE — OVERHEAD ELECTRICAL
- SD — STORM DRAIN LINE
- SS — SANITARY SEWER LINE
- F — FIRE WATER LINE
- GRAVEL SURFACING
- SOD
- CONCRETE
- ASPHALT
- OR — STRUCTURE, BUILDING OR FACILITY
- CENTER LINE, BUILDING, ROAD, ETC.
- FLOW LINE

NEW

- EDGE OF PAVEMENT
- POST OR BOLLARD
- ASPHALT
- GRAVEL SURFACING
- CONCRETE
- SILT FENCE
- CHAIN LINK FENCE
- COMM — TELECOMMUNICATION
- E-BUR — BURIED ELECTRICAL
- G — NATURAL GAS LINE
- INLET PROTECTION
- XXXXXXXX — DEMOLITION
- ABANDON PIPE
- DEMOLITION OF CONCRETE
- DEMOLITION OF ASPHALT
- DEMOLITION OF GRAVEL SURFACING
- CONTRACTOR STAGING AREA

CIVIL ABBREVIATIONS

~	APPROXIMATELY
&	AND
ABA	ARCHITECTURAL BARRIERS ACT
ABC	AGGREGATE BASE COURSE
ABN	ABANDON
ABND	ABANDONED
AC	ASPHALT CONCRETE
ADA	AMERICANS WITH DISABILITIES ACT
ANG	AIR NATIONAL GUARD
APPROX	APPROXIMATE
AT	ANTI-TERRORISM
ATO	ANTI-TERRORISM OFFICER
AWWA	AMERICAN WATER WORKS ASSOCIATION
BC	BACK OF CURB
BLDG	BUILDING
BM	BENCH MARK
BMP	BEST MANAGEMENT PRACTICE
BOW	BOTTOM OF WALL
BUR	BURIED
CB	CATCH BASIN
CCSD	CONVENTIONAL CONSTRUCTION STANDOFF DISTANCE
CI	CAST IRON
CMP	CORRUGATED METAL PIPE
C.O.	CONTRACTING OFFICER
CO	CLEAN OUT
CONC	CONCRETE
CONST	CONSTRUCT
COORD	COORDINATE
COR	CONTRACTING OFFICER'S REPRESENTATIVE
CL, C	CENTERLINE
CU YD	CUBIC YARD
DI	DUCTILE IRON/DROP INLET
DIA, Ø	DIAMETER
DEMO	DEMOLISH OR DEMOLITION
DWG	DRAWING
E	EAST, EASTING
ELB	ELBOW
ELECT	ELECTRICAL
EL, ELEV	ELEVATION
EOS	EDGE OF SLAB/SIDEWALK
EP	EDGE OF PAVEMENT
EPA	ENVIRONMENTAL PROTECTION AGENCY
EQUIP	EQUIPMENT
ESC	EROSION AND SEDIMENT CONTROL
EXST	EXISTING
F	FLANGE
FDC	FIRE DEPARTMENT CONNECTION
FFE	FINISHED FLOOR ELEVATION
FG	FINISHED GRADE
FH	FIRE HYDRANT
FL	FLOWLINE
FOW	FACE OF WALL
FT	FEET
G	GAS
GB	GRADE BREAK
GOV	GOVERNMENT OWNED VEHICLES
HC	HEATING/COOLING
HP	HIGH POINT
IE	INVERT ELEVATION
INV	INVERT
L	LENGTH
LBS	POUNDS
LEV	LOW EMISSION VEHICLE
LF	LINEAR FEET
LOG	LIP OF GUTTER
LP	LOW POINT
LT	LEFT
MAX	MAXIMUM
MH	MANHOLE
MIN	MINIMUM
MISC	MISCELLANEOUS
MJ	MECHANICAL JOINT
MUTCD	MANUAL ON UNIFORM TRAFFIC CONTROL DEVICES
N	NORTH, NORTHING
NTS	NOT TO SCALE
NOI	NOTICE OF INTENT
NPDES	NATIONAL POLLUTANT DISCHARGE ELIMINATION SYSTEM
OD	OUTER DIAMETER
ODOT	OHIO DEPARTMENT OF TRANSPORTATION
OH,OVH	OVERHEAD
OSHA	OCCUPATIONAL SAFETY AND HEALTH ADMINISTRATION
OWS	OIL/WATER SEPARATOR
PC	POINT OF CURVATURE
PCC	POINT OF COMPOUND CURVE
PCCP	PORTLAND CEMENT CONC PAVEMENT
PE	POLYETHYLENE
PED	PEDESTRIAN
PI	POST INDICATOR VALVE
PJF	PREMOLDED JOINT FILLER
PSI	POUNDS PER SQUARE INCH
PT	POINT OF TANGENCY
PVC	POLYVINYL CHLORIDE OR POINT OF VERTICAL CURVATURE
PVI	POINT OF VERTICAL INTERSECTION
PVT	POINT OF VERTICAL TANGENCY
PVMT	PAVEMENT
R,RAD	RADIUS
RCP	REINFORCED CONCRETE PIPE
REQ'D	REQUIRED
RT	RIGHT
S, SS	SANITARY SEWER
SD	STANDARD DETAIL / STORM DRAIN
SIM	SIMILAR
SOG	SLAB ON GRADE
SPEC'D	SPECIFIED
SST	STAINLESS STEEL
STA =	STATION
STND	STANDARD
STRUCT	STRUCTURAL
SW	SIDEWALK
SWPPP	STORMWATER POLLUTION PREVENTION PLAN
TBC	TOP BACK OF CURB
TG	TOP OF GRATE
TOC	TOP OF CONCRETE
TOS	TOP OF SLAB
TOW	TOP OF WALL
TYP	TYPICAL
UG	UNDERGROUND
UNO	UNLESS NOTED OTHERWISE
UST	UNDERGROUND STORAGE TANK
VERT	VERTICAL
W	WATER
W/	WITH

STATE OF OHIO
CHRISTOPHER STEVEN WULFF
E-65169
REGISTERED
PROFESSIONAL ENGINEER
5/11/26

MARK	DESCRIPTION	DATE

ISSUE DATE: MAY 2026
ANG PROJECT NO.: PBXP222050
CONTRACT NO: FA8903-21-D-0008
TASK ORDER NO: W9038R23F0009

DESIGNED BY: A. THOMPSON
DRAWN BY: J. OYE
CHECKED BY: I. NATH
SUBMITTED BY: D. PEARSON
SIZE: ANSI D

OHIO AIR NATIONAL GUARD
MANSFIELD LAHM AIR NATIONAL GUARD BASE, OH

JACOBS GOVERNMENT SERVICES
2600 MICHELSON DR., STE 500
IRVINE, CA 92612

MANSFIELD LAHM AIR NATIONAL GUARD BASE, OH
REPAIR B403 FOR CYBER
FA877005
CIVIL
GENERAL NOTES, ABBREVIATIONS AND LEGEND

SHEET ID
C-001

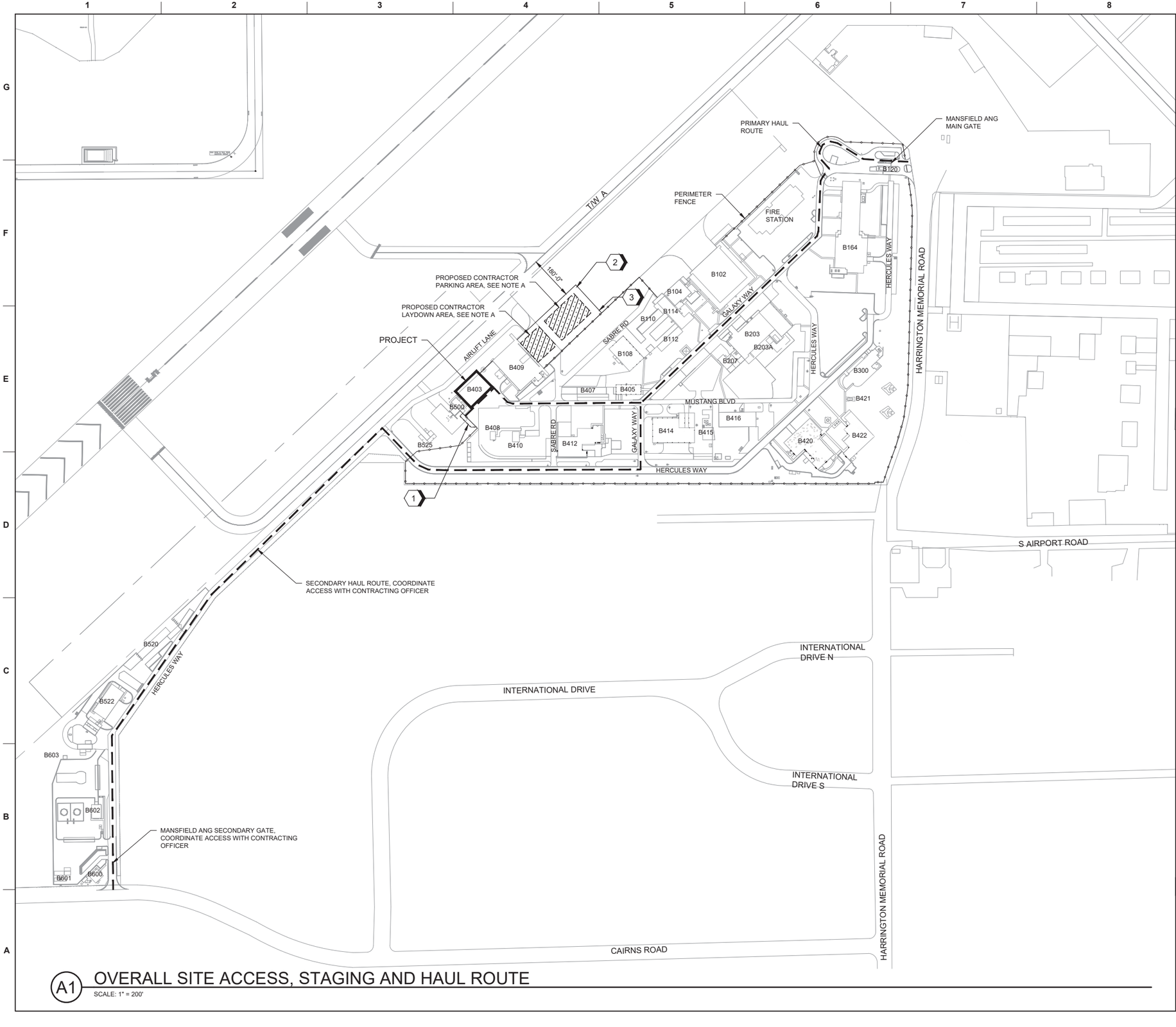

A1 OVERALL SITE ACCESS, STAGING AND HAUL ROUTE

SCALE: 1" = 200'

GENERAL SHEET NOTES

A. LAYDOWN AREA SHALL BE FOR STOCKPILES AND MATERIAL STORAGE. PARKING AREA FOR CONTRACTOR'S EMPLOYEE PARKING AND TRAILERS. FINAL LOCATION TO BE COORDINATED WITH CONTRACTING OFFICER. SUBMIT STAGING PLAN INCLUDING TEMPORARY BARRIER LOCATION AND DETAIL FOR APPROVAL PRIOR TO CONSTRUCTION.

B. ALL MATERIALS TO BE STOCKPILED FOR 24 HOURS OR MORE SHALL BE COVERED UNLESS OTHERWISE DIRECTED OR APPROVED IN WRITING BY CONTRACTING OFFICER.

C. COORDINATE ACCESS AND ESCORTING REQUIREMENTS TO THE SITE AND FLIGHTLINE WITH CONTRACTING OFFICER PRIOR TO CONSTRUCTION.

D. CONTRACTOR TO RESTORE ALL STAGING AREAS TO EXISTING CONDITIONS AT COMPLETION OF CONSTRUCTION ACTIVITIES.

E. RELOCATION OF THE FENCE AND ESTABLISHMENT OF THE STAGING/LAYDOWN/PARKING AREA REQUIRES ACCESS TO THE AIRPORT OPERATIONS AREA (AOA).

F. COORDINATE AOA TRAINING AND BADGING REQUIREMENTS WITH CONTRACTING OFFICER.

G. COORDINATE FOREIGN OBJECT DEBRIS (FOD) MITIGATION PLAN WITH CONTRACTING OFFICER PRIOR TO MOBILIZING. DEBRIS MUST BE KEPT FROM ENTERING THE AIRCRAFT OPERATING AREA AT ALL TIMES.

H. CONTRACTOR SHALL NOT GO BEYOND BARRICADES AT ANY TIME WITHOUT COORDINATION AND APPROVAL OF THE CONTRACTING OFFICER.

I. CONSTRUCTION ACTIVITY REQUIRES PRIOR FAA APPROVAL (FAA 7460-1), WHICH WILL BE COORDINATED BY ANG. ACTIVITIES REQUIRING CRANES OR OTHER LIFTING EQUIPMENT REQUIRE SPECIAL COORDINATION AND SEPARATE APPROVAL THAN GENERAL CONSTRUCTION EQUIPMENT.

J. CONFIRM COMPLETION OF FAA APPROVAL PROCESS WITH CONTRACTING OFFICER PRIOR TO BEGINNING ANY CONSTRUCTION ACTIVITIES, INCLUDING MOBILIZATION ONTO THE AIRCRAFT APRON AND CREATION OF THE STAGING/LAYDOWN/PARKING AREA.

K. CONTRACTOR PERSONNEL ARE STRICTLY PROHIBITED FROM CROSSING OUTSIDE THE WORK AREA BOUNDARIES AS DEFINED ON THIS PLAN. CROSSING THE BOUNDARY WITHOUT PERMISSION OF THE CONTRACTING OFFICER IS CAUSE FOR IMMEDIATE AND PERMANENT DISMISSAL FROM THE SITE.

L. WHEN WORKING INSIDE THE AOA, THE CONTRACTOR SHALL MAINTAIN CONTINUOUS TWO-WAY RADIO CONTACT WITH THE ATCT. THE CONTRACTOR SHALL PROVIDE A MINIMUM OF THREE RADIOS CAPABLE OF TRANSMITTING AND RECEIVING ON A VHF AIRCRAFT FREQUENCY FOR THIS PURPOSE. EACH RADIO SHALL EITHER BE A HARD-WIRED VEHICLE-MOUNTED BASE RADIO OR A PORTABLE TRANSCEIVER. IF PORTABLE RADIOS ARE USED, EACH MUST BE EQUIPPED WITH A SPARE BATTERY PACK AND VEHICLE POWER.

M. THE CONTRACTOR IS RESPONSIBLE FOR GUARDING AGAINST UNAUTHORIZED ACCESS TO THE SITE AND TO SECURE AREAS OF THE AIRFIELD, ANY OPENING IN THE AIR OPERATIONS AREA (AOA) SECURITY FENCE SHALL BE GUARDED BY AUTHORIZED (BADGED) PERSONNEL AT ALL TIMES WHILE OPEN. CONTRACTOR IS REQUIRED TO MAINTAIN ACCESS TO THE PROJECT IN ACCORDANCE WITH THE AIRPORT AND TSA REQUIREMENTS

N. VEHICLE ACCESS MUST BE MAINTAINED BETWEEN CONTRACTOR PARKING AND LAYDOWN AREA FOR B102 CONSTRUCTION. COORDINATE WITH CONTRACTING OFFICER PRIOR TO CONSTRUCTION.

SHEET KEYNOTES

1. CONSTRUCT AND TIE IN NEW FENCE PRIOR TO DEMOLISHING EXISTING FENCE TO MAINTAIN CONTINUITY OF AOA SECURE PERIMETER. COORDINATE INSPECTION OF NEW FENCING WITH CONTRACTING OFFICER. SEE SHEETS CD101 AND CS101 FOR DETAILS
2. PLACE AT A MINIMUM LOW PROFILE BARRICADES MIN. 150' FROM TAXIWAY A CENTERLINE. AREA BEYOND THESE BARRICADES IS AN ACTIVE AIRFIELD OPERATIONS AREA
3. MANNED GATE, SEE GENERAL NOTE N

GRAPHIC SCALE(S)

0 200' 400' 600'

SCALE: 1" = 200'-0"

PLAN NORTH

STATE OF OHIO — CHRISTOPHER STEVEN WULFF — E-65169 — REGISTERED PROFESSIONAL ENGINEER

5/11/26

MARK	DESCRIPTION	DATE

DESIGNED BY: A. THOMPSON
DRAWN BY: J. OYE
CHECKED BY: I. NATH
SUBMITTED BY: D. PEARSON
SIZE: ANSI D
ISSUE DATE: MAY 2026
ANG PROJECT NO.: PBXP222050
CONTRACT NO.: FA8903-21-D-0008
TASK ORDER NO: W9058R23F0009

OHIO AIR NATIONAL GUARD
MANSFIELD LAHM AIR NATIONAL GUARD BASE, OH

JACOBS GOVERNMENT SERVICES
2600 MICHELSON DR., STE 500
IRVINE, CA 92612

MANSFIELD LAHM AIR NATIONAL GUARD BASE, OH
REPAIR B403 FOR CYBER
FA877005
CIVIL
OVERALL SITE ACCESS, STAGING AND HAUL ROUTE

SHEET ID
C-002

TYPE B-3 FINAL

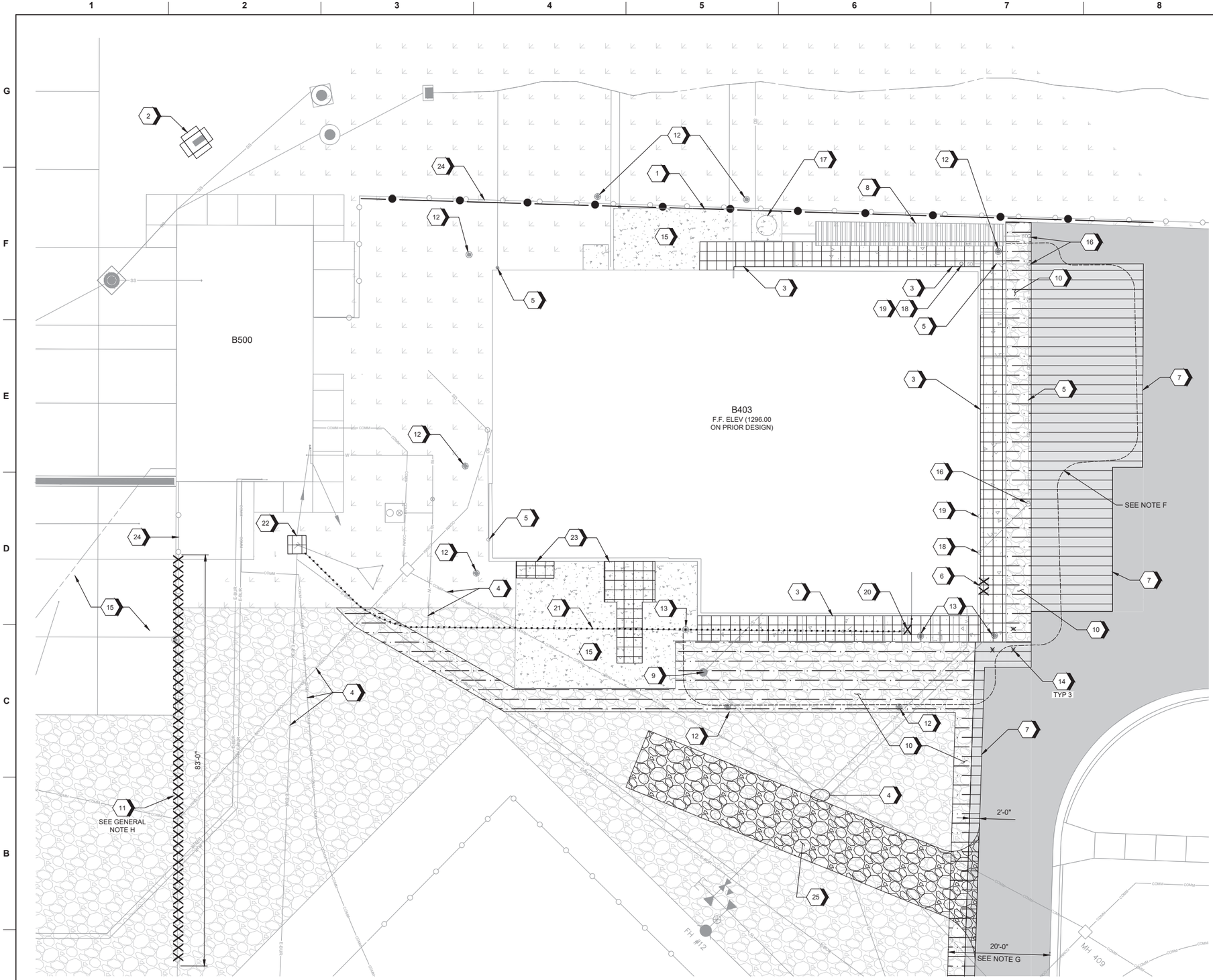

A1 DEMOLITION AND EROSION AND SEDIMENT CONTROL PLAN

SCALE: 1" = 10'

GENERAL SHEET NOTES

A. CONTRACTOR SHALL PROVIDE ALL NECESSARY EROSION CONTROL AS FIELD CONDITIONS REQUIRE. CONTRACTOR IS RESPONSIBLE FOR DEVELOPING AND SUBMITTING FINAL EROSION AND SEDIMENTATION CONTROL (ESC) AND/OR SWPPP TO THE CONTRACTING OFFICE FOR REVIEW AND APPROVAL AS SPECIFIED PRIOR TO CONSTRUCTION.

B. CONTRACTOR IS RESPONSIBLE FOR MAINTAINING ALL TEMPORARY AND PERMANENT EROSION CONTROL MEASURES AT ALL TIMES. MAINTENANCE OF TEMPORARY AND PERMANENT EROSION CONTROL MEASURES SHALL BE CONSIDERED INCIDENTAL.

C. STORM WATER RUNOFF SHALL NOT BE ALLOWED TO LEAVE SITE UNTREATED (LADEN WITH SUSPENDED SEDIMENT). IF THIS OCCURS THE CONTRACTOR WILL BE HELD SOLELY RESPONSIBLE FOR ANY PERMIT VIOLATIONS AND FINES.

D. CONTRACTOR TO CONFORM TO OHIO EPA'S RAINWATER AND LAND DEVELOPMENT MANUAL FOR ESC GUIDANCE, INCLUDED BEST MANAGEMENT PRACTICES.

E. SEE ARCHITECTURAL AND MECHANICAL DRAWINGS FOR RECONFIGURATION OF EXTERIOR DOWNSPOUT PIPING.

F. PRIOR EXCAVATION OCCURRED DURING CONSTRUCTION OF THE BUILDING ADDITION. SIX TO SEVEN FEET OF UNCLASSIFIED FILL WAS EXCAVATED AND REPLACED WITH NON FROST SUSCEPTIBLE FILL. IF IMPROVEMENTS EXIST OUTSIDE OF THE PREVIOUS EXCAVATION LIMITS, OVER EXCAVATE FOUR FEET AND REPLACE WITH NON FROST SUSCEPTIBLE FILL.

G. THE FIRE DEPARTMENT REQUIRES REQUIRES A 20 FOOT WIDE ASPHALT DRIVE TO THE BUILDING. SAWCUT AND WIDEN THE ASPHALT BACK TO NEAREST POINT EXISTING ROAD HAS 20' WIDTH (APPROXIMATELY 100 LF).

H. NEW FLIGHT LINE FENCE, SHOWN ON CS101, TO BE INSTALLED PRIOR TO THE DEMOLITION OF FLIGHT LINE FENCE

SHEET KEYNOTES

1. SILT FENCE, SEE DETAIL A1/C-501
2. INLET PROTECTION, SEE DETAIL A6/C-501
3. SAWCUT AND DEMOLISH SIDEWALK, SEE GENERAL NOTE E
4. RETAIN AND PROTECT EXISTING UTILITIES
5. RETAIN AND PROTECT STORM DRAIN INLET AND UNDERGROUND PIPING
6. DEMOLISH EXISTING ABOVE GRADE GAS METER ASSEMBLY, SEE PD101
7. SAWCUT AND DEMOLISH EXISTING ASPHALT PAVEMENT
8. RETAIN AND PROTECT EXISTING UNDERGROUND INFILTRATION GALLERY
9. RETAIN AND PROTECT EXISTING SANITARY MANHOLE; REMOVE AND SALVAGE FRAME AND LID
10. DEMOLISH GRAVEL SURFACING
11. DEMOLISH CHAIN LINK FENCE
12. RETAIN AND PROTECT LIGHTNING PROTECTION TEST WELLS, SEE ED101
13. DEMOLISH LIGHTNING PROTECTION TEST WELLS, SEE ED101
14. DEMOLISH BOLLARD
15. RETAIN AND PROTECT EXISTING CONCRETE PAVEMENT
16. RETAIN AND PROTECT SD CLEANOUTS
17. RETAIN AND PROTECT MANHOLE AND SURROUNDING CONCRETE PAD
18. REMOVE SD GRATE AND CAP; RETAIN AND PROTECT EXISTING SD PIPING BELOW GRADE
19. DEMOLISH LAMBS TONGUE DRAIN
20. DEMOLISH HAND HOLE, SEE ED101
21. ABANDON BURIED ELECTRICAL IN PLACE, SEE ED101
22. DEMOLISH TRANSFORMER PAD, SEE ED101
23. SAWCUT AND DEMOLISH CONCRETE APRON
24. RETAIN AND PROTECT CHAIN LINK FENCE
25. CONSTRUCTION ENTRANCE, SEE DETAIL A8/C-501

GRAPHIC SCALE(S)

0 10' 20' 30'

SCALE: 1" = 10'

PLAN NORTH

STATE OF OHIO
CHRISTOPHER STEVEN WULFF
E-83169
REGISTERED
PROFESSIONAL ENGINEER

5/11/26

MARK	DESCRIPTION	DATE

ISSUE DATE: MAY 2026
ANG PROJECT NO.: PBXP222050
CONTRACT NO: FA8903-21-D-0008
TASK ORDER NO: W50S8R23F0009

DESIGNED BY: A. THOMPSON
DRAWN BY: J. OYE
CHECKED BY: I. NATH
SUBMITTED BY: D. PEARSON
ANSI D

OHIO AIR NATIONAL GUARD
MANSFIELD LAHM AIR NATIONAL GUARD BASE, OH

JACOBS GOVERNMENT SERVICES
2600 MICHELSON DR., STE 500
IRVINE, CA 92812

MANSFIELD LAHM AIR NATIONAL GUARD BASE, OH
REPAIR B403 FOR CYBER
FA877005
CIVIL
DEMOLITION AND
EROSION AND SEDIMENT CONTROL PLAN

SHEET ID
CD101

TYPE B-3 FINAL

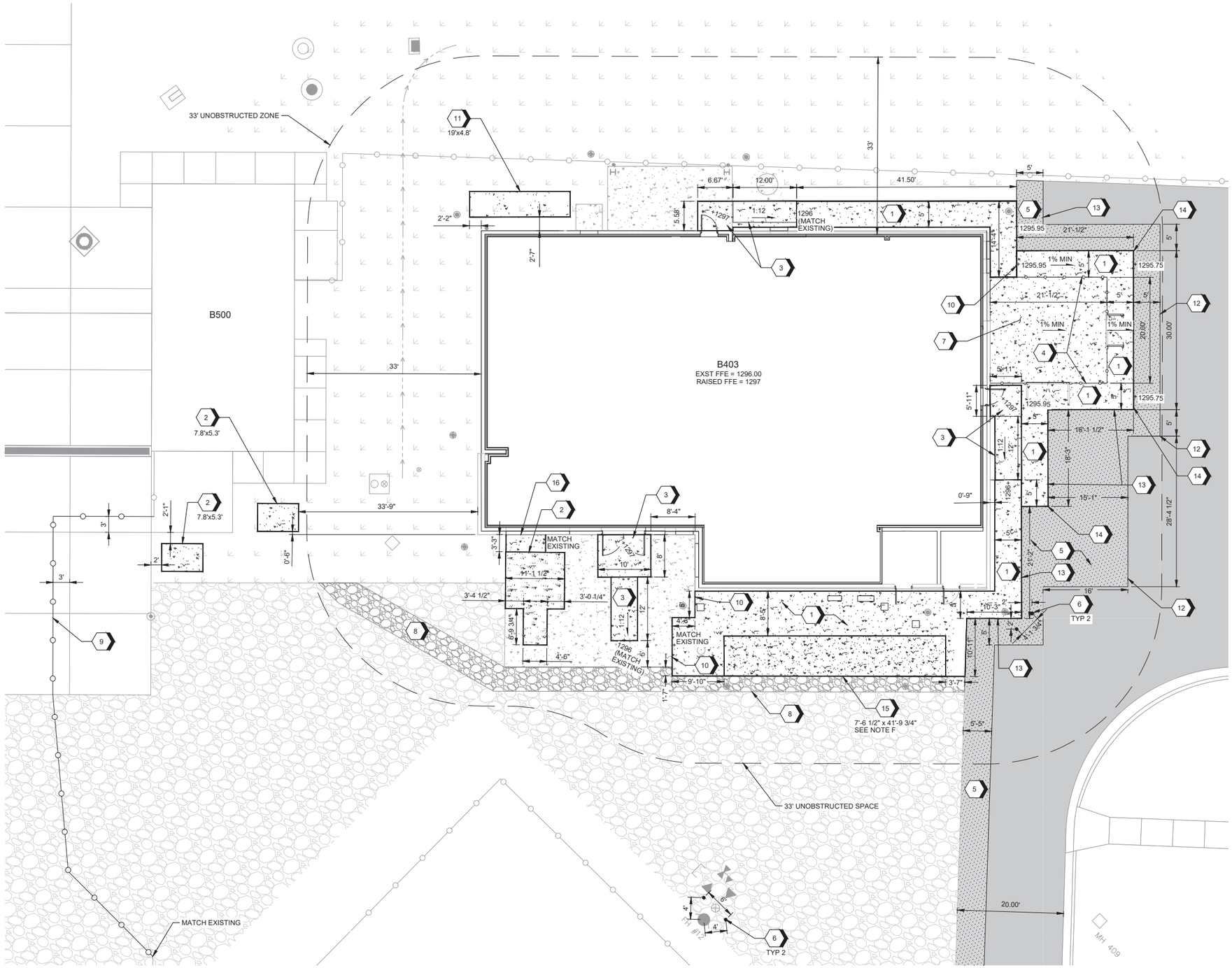

A1 GRADING AND SITE LAYOUT PLAN

SCALE: 1" = 10'

GENERAL SHEET NOTES

A. PROVIDE SMOOTH TRANSITION BETWEEN NEW AND EXISTING SIDEWALKS. ALL SIDEWALK MUST BE ABA ACCESSIBLE.

B. SPOT GRADES SHOWN ARE APPROXIMATE, NO SURVEY WAS CONDUCTED. ALL NEW WORK TO TIE INTO EXISTING ADJACENT GRADES.

C. ALL EQUIPMENT PADS TO BE A MINIMUM OF 4" ABOVE ADJACENT GRADE.

D. NEW SIDEWALKS AND ASPHALT PAVEMENT TO MATCH EXISTING SURROUNDING GRADES. PROVIDE A SMOOTH TRANSITION ACROSS CONNECTION POINTS.

E. SLOPE MECHANICAL YARD AND ATTACHED SIDEWALK TO BE A MINIMUM OF 1% CROSS SLOPE AWAY FROM THE BUILDING. CONTRACTOR TO VERIFY EXISTING AND PROPOSED GRADES PRIOR TO CONSTRUCTION.

F. CONCRETE EQUIPMENT PAD IS LOCATED AND SIZED BASED ON EQUIPMENT DEFINED ON ES101. IF EQUIPMENT SELECTED IS DIFFERENT IN SIZE, PAD MAY NEED TO BE REVISED TO MATCH MANUFACTURER'S RECOMMENDATIONS. REVIEW AND APPROVAL OF PAD LOCATION REQUIRED. PAD SHOULD NOT CONFLICT WITH SIDEWALK CIRCULATION.

SHEET KEYNOTES

1. CONCRETE SIDEWALK, SEE DETAIL D8/C-501
2. CONCRETE EQUIPMENT PAD ON EXISTING CONCRETE APRON, SEE DETAIL F1/S-501 AND NOTE C
3. ABA LANDING AND RAMP, SEE DETAILS D4/S-501 AND E4/A-501
4. EQUIPMENT ENCLOSURE, SEE DETAILS A3/A-450 AND A6/A-450
5. ASPHALT PATCHING PROVIDE SMOOTH TRANSITION BETWEEN EXISTING AND PROPOSED PAVEMENT, SEE DETAILS A3 AND A7/C-502
6. BOLLARD, SEE DETAIL A4/C-501
7. MECHANICAL YARD CONCRETE, SEE DETAIL F4/S-501 AND SEE NOTE E
8. GRAVEL SURFACING, SEE DETAIL D4/C-501 AND E9/C-502
9. CHAIN LINK FENCE, SEE DETAIL C1/C-502
10. CONCRETE CONNECTION, SEE DETAIL A5/C-502
11. CONCRETE EQUIPMENT PAD, SEE DETAIL F4/S-501 AND SEE NOTE C
12. MATCH EXISTING GRADE, PROVIDE SMOOTH TRANSITION
13. CONCRETE TO ASPHALT TRANSITION, SEE DETAIL A1/C-502
14. SIDEWALK WILL BE ELEVATED ABOVE EXISTING ELEVATION OF ASPHALT, CREATING A CURB. EXISTING ASPHALT GRADUALLY RISES TO MEET GRADE OF SIDEWALK AT SOUTHEAST CORNER, SEE NOTE E
15. CONCRETE EQUIPMENT PAD ON NEW CONCRETE SIDEWALK, SEE DETAIL F1/S-501 AND NOTE C AND F
16. PATCH CONCRETE APRON; MATCH EXISTING SUBBASE AND CONCRETE DEPTH AND MATERIALS, SEE DETAIL A5/C-502

GRAPHIC SCALE(S)

0 10' 20' 30'

SCALE: 1" = 10'

PLAN NORTH

STATE OF OHIO
CHRISTOPHER STEVEN WULFF
E-83169
REGISTERED
PROFESSIONAL ENGINEER
5/11/26

MARK	DESCRIPTION	DATE

ISSUE DATE: MAY 2026
ANG PROJECT NO.: PBXP222050
CONTRACT NO: FA8903-21-D-0008
TASK ORDER NO: W50S8R23F0009

DESIGNED BY: A. THOMPSON
DRAWN BY: J. OYE
CHECKED BY: I. NATH
SUBMITTED BY: D. PEARSON
SIZE: ANSI D

OHIO AIR NATIONAL GUARD
MANSFIELD LAHM AIR NATIONAL GUARD BASE, OH

JACOBS GOVERNMENT SERVICES
2600 MICHELSON DR., STE 500
IRVINE, CA 92612

MANSFIELD LAHM AIR NATIONAL GUARD BASE, OH
REPAIR B403 FOR CYBER
FA877005
CIVIL
GRADING AND SITE LAYOUT PLAN

SHEET ID
C-101

TYPE B-3 FINAL

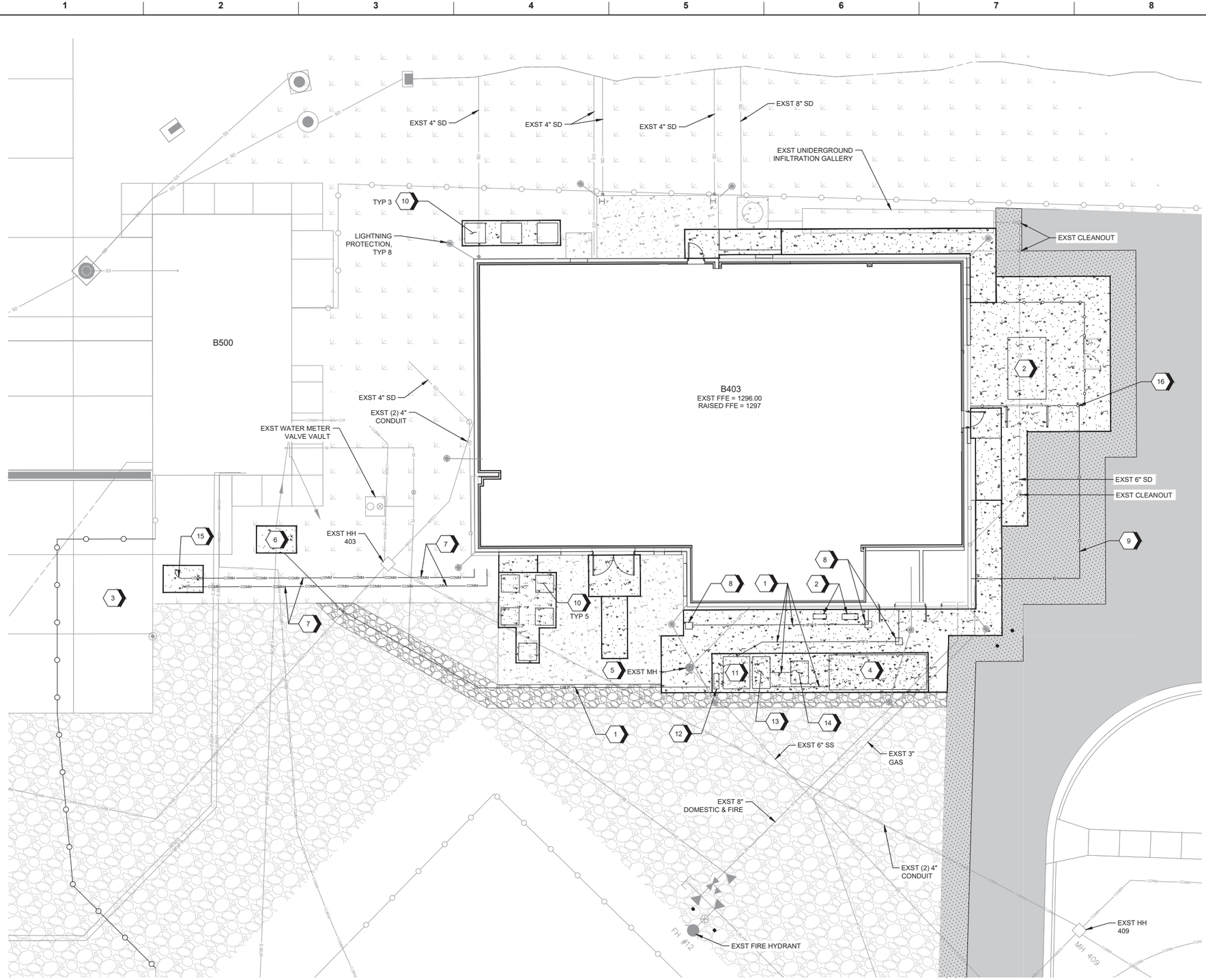

A1 UTILITY PLAN
SCALE: 1" = 10'

GENERAL SHEET NOTES

A. EXISTING UTILITY LOCAITONS AND ELEVATIONS ARE BASED ON AVAILABLE RECORD DRAWINGS AND ARE SHOWN APPROXIMATELY. VERIFY EXACT LOCATIONS AND ELEVATIONS. NOT ALL EXISTING UTILITIES MAY BE SHOWN.

B. SEE MECHANICAL SHEETS FOR EQUIPMENT AND EXTERIOR DUCT DETAILS.

C. SEE COMMUNICATIONS AND ELECTRICAL SITE PLANS FOR CONDUIT ROUTING AND DETAILS.

#SHEET KEYNOTES

1. ELECTRICAL SERVICE, SEE ES101
2. MECHANICAL EQUIPMENT, SEE M-102
3. FOLDING ANTENNAS TOWER LOCATION
4. GENERATOR, SEE ES101
5. RESET SSMH FRAME AND GRATE
6. TRANSFORMER, SEE ES101
7. COMM SERVICE, 4 - 4" CONDUITS, CONC ENCASED, SEE A1/T-505 AND T-401 FOR CONTINUATION
8. ELECTRICAL HANDHOLE, SEE ES101
9. 3/4" GAS LINE, SEE P-101 AND D1/C-501
10. CONDENSER UNITS, SEE M-102
11. AUTOMATIC AND MANUAL TRANSFER SWITCHES, SEE ES101
12. CT CABINET AND METER, SEE ES101
13. DOCKING STATION, SEE ES101
14. LOAD BANK, SEE ES101
15. COMM AND ELEC STUB UP FOR FUTURE CONNECTION TO ANTENNA TOWER
16. SEE P-101 AND P-102 FOR CONTINUATION OF ABOVE GRADE GAS, GAS METER, AND CONNECTION TO HVAC EQUIPMENT

GRAPHIC SCALE(S)

0 10' 20' 30'
SCALE: 1" = 10'

PLAN NORTH

STATE OF OHIO
CHRISTOPHER STEVEN WULFF
E-85169
REGISTERED
PROFESSIONAL ENGINEER
5/11/26

MARK	DESCRIPTION	DATE

ISSUE DATE: MAY 2026
ANG PROJECT NO.: PBXP222050
CONTRACT NO.: FA8903-21-D-0008
TASK ORDER NO.: W9GSBR23F0009

DESIGNED BY: A. THOMPSON
DRAWN BY: J. OYE
CHECKED BY: I. NATH
SUBMITTED BY: D. PEARSON
SIZE: ANSI D

OHIO AIR NATIONAL GUARD
MANSFIELD LAHM AIR NATIONAL GUARD BASE, OH

JACOBS GOVERNMENT SERVICES
2600 MICHELSON DR., STE 500
IRVINE, CA 92812

MANSFIELD LAHM AIR NATIONAL GUARD BASE, OH
REPAIR B403 FOR CYBER
FA877005
CIVIL
UTILITY PLAN

SHEET ID
CU101

TYPE B-3 FINAL

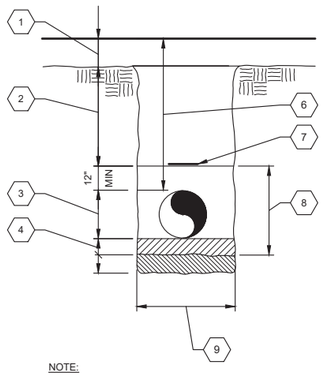

NOTES

1. NEW SURFACING, OR SURFACE RESTORATION, SEE SURFACE RESTORATION DETAIL THIS SHEET
2. TRENCH BACKFILL ABOVE PIPE ZONE
3. PIPE OUTSIDE DIAMETER
4. PIPE BEDDING MATERIAL
5. NOT USED
6. DEPTH OF COVER
7. MARKING TAPE AS SPECIFIED
8. PIPE ZONE
9. MINIMUM WIDTH = PIPE OD + 1'-6"

NOTE:

A. FROST DEPTH 40", GAS TO BE BURIED AT A MINIMUM 0F 40".

D1 TYPICAL TRENCH

SCALE: NTS

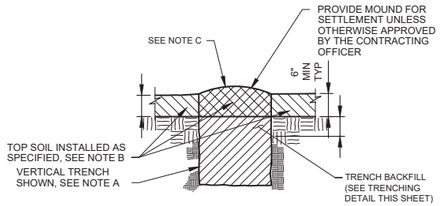

SOD/LANDSCAPING RESTORATION

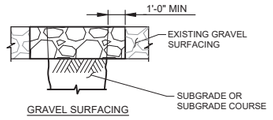

GRAVEL SURFACING

NOTES:

A. SLOPE TRENCH WALLS OR SHORE EXCAVATIONS FOR CONSTRUCTION AND SAFETY AND IN ACCORDANCE WITH CURRENT OSHA REQUIREMENTS.
B. THE TOP 6" OF TRENCH BACKFILL, BENEATH THE TOPSOIL LAYER, TO BE INSTALLED, SMOOTHED, BUT LEFT UN-COMPACTED.
C. TOPSOIL AND SEEDING TO EXTEND BEYOND TOP OF TRENCH AND TO THE LIMITS OF DISTURBANCE.

D4 SURFACE RECONSTRUCTION

SCALE: NTS

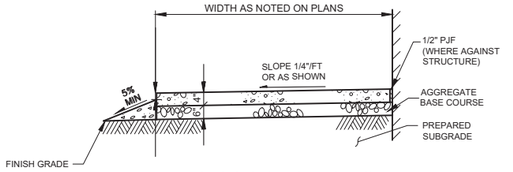

TYPICAL SECTION (ATTACHED TO BLDG)

NOTE:

A. PROVIDE 1/2" PJF AT ALL INTERFACES WITH EXISTING STRUCTURE, PCCP & CONC PADS
B. PER SPECIFICATIONS, A PAVING PLAN SHOWING TIMING OF POURS AND ALL JOINT LOCATIONS, TYPES AND DETAILS TO BE SUBMITTED FOR APPROVAL PRIOR TO CONSTRUCTION

D8 TYPICAL CONCRETE SIDEWALK

SCALE: NTS

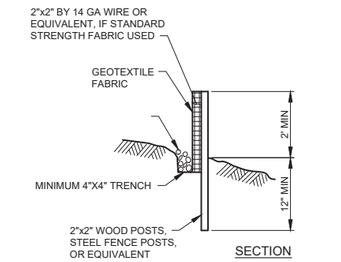

SECTION

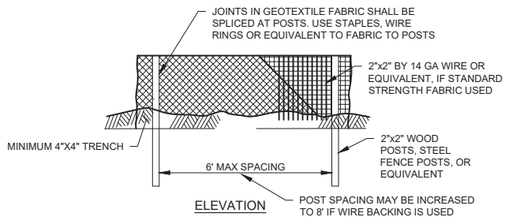

ELEVATION

NOTES:

A. BURY BOTTOM OF FILTER FABRIC 6" VERTICALLY BELOW FINISHED GRADE.
B. 2"x4" DOUGLAS FIR OR STEEL FENCE POSTS.
C. STITCHED LOOPS TO BE INSTALLED DOWNHILL SIDE OF SLOPE.
D. COMPACT ALL AREAS OF FILTER FABRIC TRENCH.

A1 SILT FENCE

SCALE: NTS

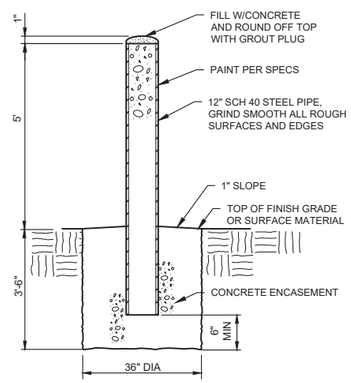

A4 BOLLARD

SCALE: NTS

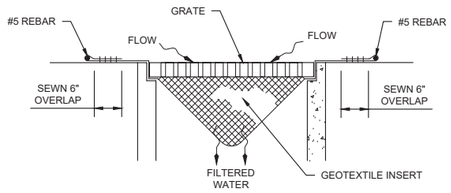

NOTES:

A. WOVEN GEOTEXTILE INSERT TO HAVE:

PROPERTY	TEST METHOD	UNITS	TEST RESULTS
GRAB TENSILE	ASTM D4632	lbs	250 X 230
GRAB ELONGATION	ASTM D4632	%	15 X 12
PUNCTURE	ASTM D6241	lbs	930
TRAPEZOID TEAR	ASTM D4533	lbs	65 X 75
AOS	ASTM D4751	US SIEVE	30
FLOW RATE	ASTM D4491	gal/min/ft	40
PERMITIVITY	ASTM D4491	sec-1	0.50

B. INSERT TO BE UV RESISTANT
C. INSERT TO BE PREFABRICATED TO MATCH SIZE OF INLET ALLOWING FOR SEWN OVERLAP WITH HANDLES

A6 INLET PROTECTION

SCALE: NTS

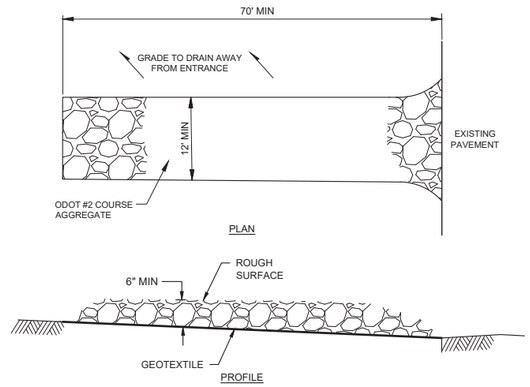

NOTES:

A. STONE AGGREGATE SHALL MEET THE GRADATION REQUIREMENTS FOR #2 (1.5-2.5 INCH) COARSE AGGREGATE IN TABLE 703.01 OF THE OHIO DEPARTMENT OF TRANSPORTATION (ODOT) CONSTRUCTION AND MATERIAL SPECIFICATION (CMS), SPECIFICATION 703, OR EQUIVALENT. POORLY GRADED AGGREGATE DEVELOPS AN ABRASIVE SURFACE AND IS PREFERRED.
B. GEOTEXTILE SHALL BE POLYMERIC FIBERS FORMED INTO A WOVEN OR NON-WOVEN FABRIC THAT MEETS THE CURRENT ODOT CMS SPECIFICATION 712.09 FOR TYPE D: SUBGRADE-BASE SEPARATION OR STABILIZATION, OR EQUIVALENT.
C. ABRASIVE MANUFACTURED MATS MAY BE USED AS AN ALTERNATIVE. THEY MUST BE INSTALLED TO THE SAME DIMENSIONS AS STONE STABILIZATION AND IN ACCORDANCE WITH THE MANUFACTURER'S SPECIFICATIONS, INCLUDING ALLOWABLE LOADS, ANCHORING, AND CONNECTIONS.

A8 CONSTRUCTION ENTRANCE

SCALE: NTS

STATE OF OHIO
CHRISTOPHER STEVEN WULFF
E-83169
REGISTERED
PROFESSIONAL ENGINEER
5/11/26

MARK	DESCRIPTION	DATE

DESIGNED BY: A. THOMPSON
DRAWN BY: J. OYE
CHECKED BY: I. NATH
SUBMITTED BY: D. PEARSON
ANSI D

ISSUE DATE: MAY 2026
ANG PROJECT NO.: PBXP222050
CONTRACT NO: FA8903-21-D-0008
TASK ORDER NO: W50S8R23F0009

OHIO AIR NATIONAL GUARD
MANSFIELD LAHM AIR NATIONAL GUARD BASE, OH

JACOBS GOVERNMENT SERVICES
2600 MICHELSON DR., STE 500
IRVINE, CA 92612

MANSFIELD LAHM AIR NATIONAL GUARD BASE, OH
REPAIR B403 FOR CYBER
FA877005
CIVIL - DETAILS 1

SHEET ID
C-501

TYPE B-3 FINAL

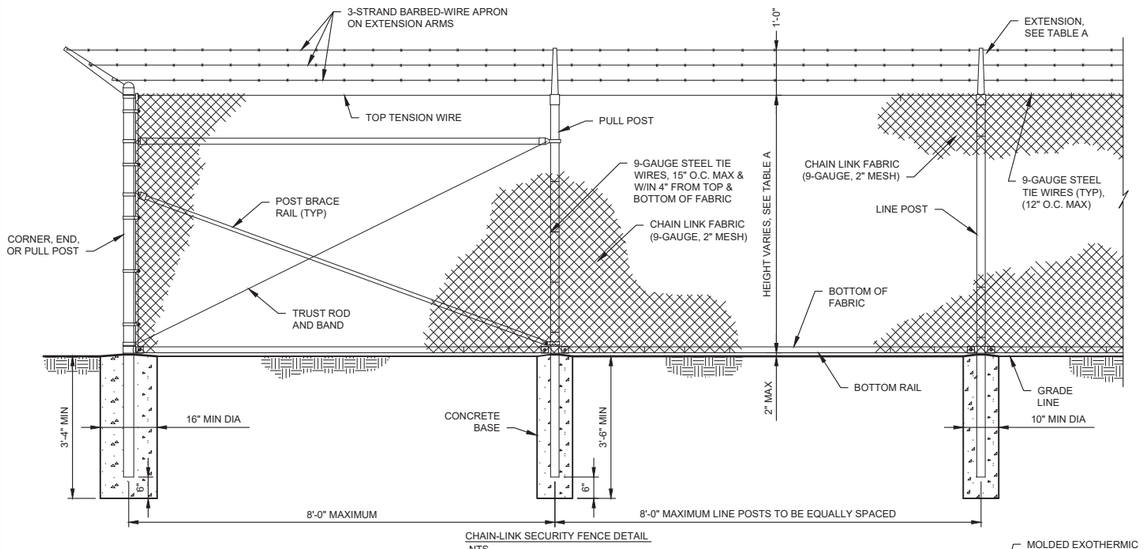

CHAIN-LINK SECURITY FENCE DETAIL
NTS

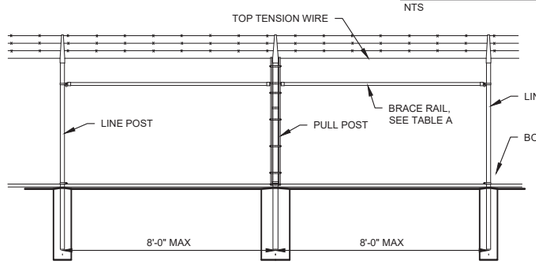

BRACE PANEL DETAIL
NTS

NOTES:

A WIRE TIES, RAILS, POSTS, AND BRACES SHALL BE CONSTRUCTED ON THE SECURE SIDE OF THE FENCE ALIGNMENT. CHAIN-LINK FABRIC SHALL BE PLACED ON THE SIDE OPPOSITE THE SECURE AREA.
B. 9-GAUGE GALVANIZED STEEL TIE WIRES SHALL BE USED FOR FASTENING THE FENCE FABRIC TO FENCE POSTS AND RAILS. HOG RINGS SHALL BE USED FOR FASTENING FENCE FABRIC TO TENSION WIRES.
C. BOTTOM RAIL SHALL BE ATTACHED TO DOUBLE RAIL ENDS USING 3/8" CARRIAGE BOLTS AS SHOWN. ADDITIONAL HOLES SHALL BE DRILLED THROUGH THE BOTTOM RAIL ENDS TO ENSURE THAT CARRIAGE BOLTS PASS THROUGH THE BOTTOM RAIL AS SHOWN.
D. GATE STRUCTURAL COMPONENTS TO BE SAME AS FENCE MATERIAL, NO ALUMINUM STRUCTURAL MEMBERS ARE ALLOWED.
E. REMOVE EXISTING WARNING SIGNS FROM FENCE TO BE DEMOLISHED AND REINSTALL ON NEW FENCE.

C1 CHAIN LINK FENCE

SCALE: NTS

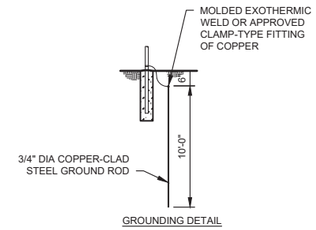

GROUNDING DETAIL

TABLE A: FENCING CRITERIA

FENCE TYPE	HEIGHT	EXTENSION	BRACE RAIL
FE7	7'-0"	ARM, SEE DETAIL	NO

STEEL POST SCHEDULE	
USE AND SECTION	MIN OUTSIDE DIMENSIONS (NOMINAL)
CORNER, END & PULL POSTS	
TUBULAR - ROUND	2.845" O.D.
LINE POSTS	
TUBULAR - ROUND	2" O.D.
BOTTOM & BRACE RAILS	
TUBULAR - ROUND	1.66" O.D.
C-SECTION (ROLL-FORMED)	1.625" x 1.25"

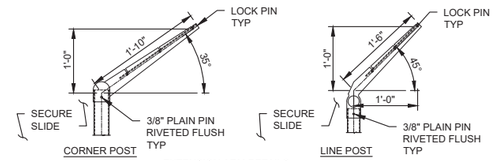

EXTENSION ARM DETAILS
NTS

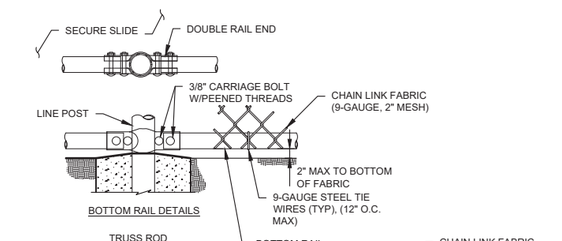

BOTTOM RAIL DETAILS

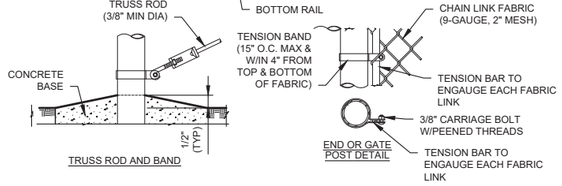

TRUSS ROD AND BAND

END OR GATE POST DETAIL

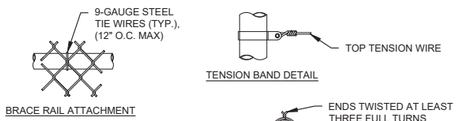

BRACE RAIL ATTACHMENT

TENSION BAND DETAIL

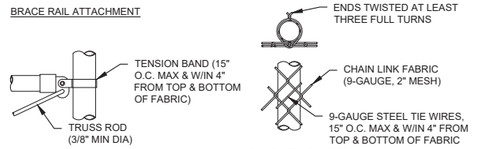

BRACE RAIL CLAMP DETAIL

LINE POST ATTACHMENTS

FASTENING DETAILS

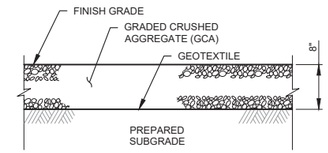

E9 GRAVEL SURFACING

SCALE: NTS

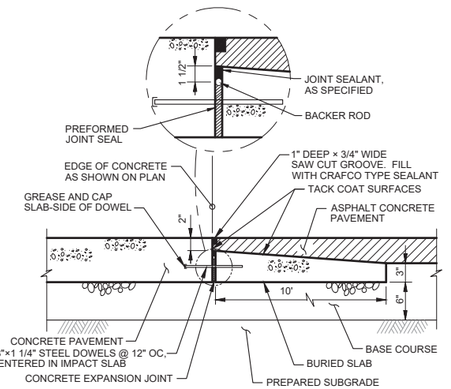

A1 CONCRETE TO ASPHALT TRANSITION

SCALE: NTS

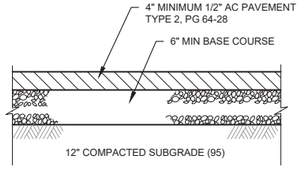

NOTE:

A PREPARE ASPHALT MIX DESIGN FOR REVIEW AND APPROVAL. DESIGN TO CONFORM TO OHIO DEPARTMENT OF TRANSPORTATION SPECIFICATIONS.

A3 ASPHALT PAVEMENT

SCALE: NTS

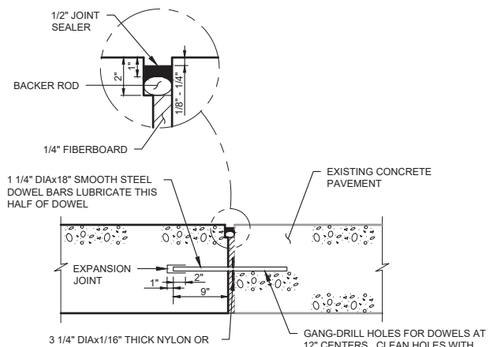

A5 CONCRETE CONNECTION

SCALE: NTS

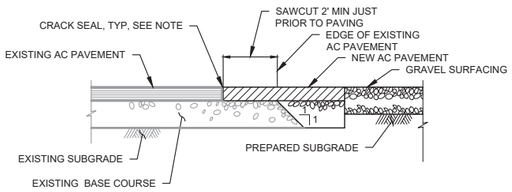

NOTE:

A. PAINT EDGE OF EXISTING ASPHALT WITH TACK COAT PRIOR TO PAVING. CRACK SEAL JOINT AFTER PAVING OPERATION HAS BEEN COMPLETED.

A7 AC PAVEMENT CONNECTION

SCALE: NTS

STATE OF OHIO
CHRISTOPHER STEVEN WULFF
E-85169
REGISTERED
PROFESSIONAL ENGINEER
5/11/26

MARK	DESCRIPTION	DATE

DESIGNED BY: A. THOMPSON
DRAWN BY: J. OYE
CHECKED BY: I. NATH
SUBMITTED BY: D. PEARSON
DATE: AS NS D

ISSUE DATE: MAY 2026
ANG PROJECT NO.: PBXP222050
CONTRACT NO.: FA8903-21-D-0008
TASK ORDER NO.: W9058R23F0009

OHIO AIR NATIONAL GUARD
MANSFIELD LAHM AIR NATIONAL GUARD BASE, OH

JACOBS GOVERNMENT SERVICES
2600 MICHELSON DR., STE 500
IRVINE, CA 92612

MANSFIELD LAHM AIR NATIONAL GUARD BASE, OH
REPAIR B403 FOR CYBER
FA877005
CIVIL - DETAILS 2

SHEET ID
C-502

TYPE B-3 FINAL

GENERAL

A. DO NOT SCALE STRUCTURAL DRAWING TO DETERMINE SPECIFIC DIMENSIONS OR QUANTITY OF MATERIALS.

B. PRIOR TO FABRICATIONS AND CONSTRUCTION, THE CONTRACTOR MUST VERIFY EXISTING ELEVATIONS AND DIMENSIONS ASSOCIATED WITH THE WORK. CONFLICTS BETWEEN VARIOUS ELEMENTS OF THE CONTRACT DOCUMENTS MUST BE BROUGHT TO IMMEDIATE ATTENTION OF THE COR PRIOR TO PROCEEDING WITH RELATED WORK.

C. DIMENSIONS TAKE PRECEDENCE OVER SCALE SHOWN ON PLAN, SECTIONS AND DETAILS. NOTES AND DETAILS ON DRAWINGS TAKE PRECEDENCE OVER GENERAL NOTES AND TYPICAL DETAILS.

D. COORDINATE WITH THE COR TO LOCATE ALL EXISTING UNDERGROUND UTILITIES AND BURIED ITEMS PRIOR TO CONSTRUCTING FOUNDATIONS.

E. THE STRUCTURAL DRAWINGS REPRESENT THE FINISHED STRUCTURE AND DO NOT INDICATE THE METHOD OF CONSTRUCTION. CONSTRUCTION LOADS MUST NOT EXCEED THE DESIGN LIVE LOADS. DO NOT STORE CONSTRUCTION MATERIALS ON ALREADY POURED OR ERECTED FLOORS OR ROOFS.

F. THE CONTRACTOR IS RESPONSIBLE FOR ALL WORK RELATED TO CONSTRUCTION, ERECTION METHODS, BRACING, SHORING, RIGGING, GUYS, SCAFFOLDING, FORMWORK, ETC, REQUIRED TO SAFELY PERFORM THE WORK.

G. DO NOT CUT OR CORE STRUCTURAL MEMBERS (FOR PIPES, DUCTS, ETC.) UNLESS SPECIFICALLY DETAILED ON THE STRUCTURAL DRAWINGS OR APPROVED IN WRITING BY THE COR.

H. VERIFY SIZE AND LOCATION OF ALL OPENINGS THROUGH FLOORS, WALLS, SLABS, AND ROOFS WITH MECHANICAL, ELECTRICAL, AND ARCHITECTURAL DRAWINGS, AND WITH EQUIPMENT FURNISHED PRIOR TO PROCEEDING WITH RELATED WORK.

I. TYPICAL DETAILS AS SHOWN ON THE DRAWINGS APPLY TO SIMILAR SITUATIONS OCCURRING ON THE PROJECT WHETHER OR NOT THEY ARE IDENTIFIED IN EACH LOCATION.

J. SEE ARCHITECTURAL DRAWINGS FOR THE FOLLOWING:
- SIZE AND LOCATION OF DOOR AND WINDOW OPENINGS EXCEPT AS NOTED.
- SIZE AND LOCATION OF INTERIOR AND EXTERIOR NON-BEARING PARTITIONS.
- SIZE AND LOCATION OF FLOOR AND ROOF OPENINGS EXCEPT AS SHOWN.
- FLOOR AND ROOF FINISHES.

DIMENSION AND DATUM:

1. UNLESS NOTED OTHERWISE EQUALLY SPACE BEAMS, PURLINS, AND JOISTS BETWEEN DIMENSIONS SHOWN.
2. CENTER COLUMNS, FOOTING, AND OTHER FOUNDATION ELEMENTS ON GRID LINES UNLESS NOTED OTHERWISE.
3. DIMENSIONS SHOWN ARE TO THE CENTERLINE OF MEMBERS OR FACE OF WALLS UNLESS NOTED OTHERWISE.
4. ALL ELEVATION ARE REFERENCED TO RELATIVE TOP OF SLAB ON GRADE DATUM OF ELEVATION 100'-0". REFER TO THE CIVIL SITE PLAN FOR ACTUAL FINISH FLOOR DATUM ELEVATION AND BUILDING COORDINATE LOCATIONS.

DESIGN CODES AND STANDARDS

1. UNIFIED FACILITIES CRITERIA UFC 1-200-01 DoD BUILDING CODE (GENERAL BUILDING REQUIREMENTS), WITH CHANGE 4 AND 17 DEC 2024 IS THE GOVERNING CODE, ESTABLISHING THE USE OF CONSENSUS BUILDING CODES STANDARDS AND UNIQUE MILITARY CRITERIA. THE CODES AND STANDARDS LISTED BELOW ARE THE EDITION ADOPTED BY THE GOVERNING UFC 1-200-01
2. UNIFIED FACILITIES CRITERIA UFC 3-301-01 STRUCTURAL ENGINEERING
3. UNIFIED FACILITIES CRITERIA UFC 3-220-01 GEOTECHNICAL ENGINEERING
4. UNIFIED FACILITIES CRITERIA UFC 4-010-01 DoD MINIMUM ANTITERRORISM STANDARDS FOR BUILDINGS
5. INTERNATIONAL CODE COUNCIL, THE INTERNATIONAL BUILDING CODE (IBC) 2024 EDITION WITH AS AMENDED BY UFC CRITERIA LISTED ABOVE
6. ASCE 7 MINIMUM DESIGN LOADS AND ASSOCIATED CRITERIA FOR BUILDINGS AND OTHER STRUCTURES
7. AMERICAN INSTITUTE OF STEEL CONSTRUCTION, AISC MANUAL OF STEEL CONSTRUCTION
8. AMERICAN INSTITUTE OF STEEL CONSTRUCTION, ANSI/AISC 360 SPECIFICATION FOR STRUCTURAL STEEL BUILDINGS
9. ACI 318 BUILDING CODE REQUIREMENTS FOR STRUCTURAL CONCRETE
10. CONCRETE REINFORCING STEEL INSTITUTE, CRSI MANUAL OF STANDARD PRACTICE
11. STEEL DECK INSTITUTE, ANSI/SDI C STANDARD FOR COMPOSITE STEEL FLOOR DECK SLABS; ANSI/SDI NC STANDARD FOR NON-COMPOSITE STEEL FLOOR DECK; ANSI/SDI RD STANDARD FOR STEEL ROOF DECK
12. STEEL JOIST INSTITUTE, SJI 100 STANDARD SPECIFICATIONS AND LOAD TABLES FOR STEEL JOISTS AND JOIST GIRDERS
13. AMERICAN WELDING SOCIETY, AWS D1.1-2020 STRUCTURAL WELDING CODE-STEEL
14. AMERICAN WELDING CODE, AWS D1.3 SHEET STEEL
15. AMERICAN WELDING CODE, AWS D1.4 STEEL REINFORCING BARS
16. THE MASONRY SOCIETY, TMS 402/602 BUILDING CODE REQUIREMENTS AND SPECIFICATION FOR MASONRY STRUCTURES

DESIGN LOADS

1. DEAD LOADS:
   - AS CALCULATED ACTUAL WEIGHT OF PERMANENT BUILDING MATERIALS AND EQUIPMENT.

	LIVE LOADS
ROOF	20 PSF (REDUCIBLE) UNLESS NOTED OTHERWISE
PV ALLOWANCE	5 PSF
TYPICAL FLOOR UNLESS NOTED OTHERWISE	100 PSF
MECHANICAL ROOMS	150 PSF
TYPICAL UNLESS NOTED OTHERWISE	RAISED FLOOR RATED FOR 100 PSF AND 500 LB POINT LOAD
COMPUTER EQUIPMENT ROOMS, NETWORK ROOMS	RAISED FLOOR RATED FOR 250 PSF AND 1000 LB POINT LOAD
INTERIOR WALLS & PARTITIONS EXCEEDING 6' IN HEIGHT	5 PSF HORIZONTAL
HANDRAIL AND GUARDRAIL SYSTEMS	200 LB AND 50 LB/FT (NONCONCURRENT) IN ANY DIRECTION
FALL ARREST, LIFELINE, AND ROPE DESCENT SYSTEM ANCHORAGES	3,100 LB FOR EACH ATTACHED LINE IN ANY DIRECTION
FIXED LADDERS	300 LB AT ANY POINT
STRUCTURAL CEILING GRID	LOADING PER DETAIL F8/S-521

2. SNOW LOAD:
   - GROUND SNOW LOAD: 37 PSF
3. LATERAL LOADS
   - RISK CATEGORY II
4. WIND LOAD:
   - ULTIMATE WIND SPEED (3 SEC GUST) 109 MPH
   - ALLOWABLE WIND SPEED (3 SEC GUST) 84 MPH
   - INTERNAL PRESSURE COEFFICIENT +/-0.18
   - EXPOSURE C
5. GENERAL SEISMIC DESIGN PARAMETERS:
   - SITE LOCATION:
     LATITUDE 40.812621°N
     LONGITUDE -82.516643°W
   - SITE CLASS D (PER GEOTECH. REPORT)
   - SEISMIC DESIGN CATEGORY B
   - MAPPED SHORT PERIOD ACCELERATION S_s = 0.14g
   - MAPPED 1-S PERIOD ACCELERATION S_1 = 0.059g
   - REFER TO ASCE 7-16 SECTION 11.48 FOR REQUIREMENTS FOR SITE SPECIFIC GROUND MOTIONS
   - MAXIMUM SHORT PERIOD ACCELERATION S_{MS} = 0.18g
   - MAXIMUM 1-S PERIOD ACCELERATION S_{M1} = 0.13g
   - DESIGN SHORT PERIOD ACCELERATION S_{DS} = 0.12g
   - DESIGN 1-S PERIOD ACCELERATION S_{D1} = 0.084g
6. SEISMIC DESIGN CRITERIA:
   - SEISMIC IMPORTANCE FACTOR 1.0
   - ANALYSIS METHOD: EQUIVALENT LATERAL FORCE PROCEDURE
   - BASIC SEISMIC FORCE RESISTING SYSTEM: ORDINARY REINFORCED MASONRY SHEARWALLS
   - RESPONSE MODIFICATION FACTOR, R = 2.0
   - OVERSTRENGTH, FACTOR, Ω = 2.5
   - DEFLECTION AMPLIFICATION, FACTOR, C_d =3.25
   - SEISMIC RESPONSE, COEFFICIENT, Cs = 0.32
7. SOIL DESIGN PARAMETERS:
   - ALLOWABLE BEARING PRESSURE 2000 PSF
   - SOIL UNIT WEIGHT 132 PSF
   - FROST DEPTH 42 INCHES

DEFERRED SUBMITTALS

1. DEFERRED SUBMITTAL ITEMS REQUIRE ENGINEERING DESIGN AFTER AWARD OF CONTRACT. WHERE VENDORS OR SUPPLIERS CANNOT PROVIDE ENGINEERED DESIGN OF THEIR PRODUCTS. A REGISTERED ENGINEER EMPLOYED BY THE CONTRACTOR MUST PREPARE CALCULATIONS AND DRAWINGS WHEN REQUIRED BY PROJECT SPECIFICATIONS.
2. ACCOUNT FOR TIME AND COST ASSOCIATED WITH DEFERRED SUBMITTAL IN THE FEE PROPOSAL AND SCHEDULE.
3. COORDINATE DEFERRED SUBMITTALS WITH SUB-CONTRACTORS AND VENDORS.
4. DEFERRED STRUCTURAL SUBMITTALS ARE REQUIRED FOR THE FOLLOWING:
   - LATERAL AND VERTICAL ANCHORAGE AND BRACING OF WALL MOUNTED OR SUSPENDED EQUIPMENT OR FEATURES, WEIGHING MORE THAN 31 POUNDS OR 10 PLF FOR DISTRIBUTION SYSTEMS WHERE TYPICAL DETAILS DO NOT APPLY.
   - ROOFTOP FALL PROTECTION SYSTEM.
   - RAISED FLOOR SYSTEM AND ASSOCIATED ANCHORAGE.
5. ADDITIONAL LOADS CALCULATED BY OTHERS MUST NOT ADD MORE THAN THE MOMENT LISTED BELOW TO THE FOLLOWING MEMBERS:
   a. W16x26: 21,200 lb-ft
   b. 24K8 & 24KCS4: 52,600 lb-ft
   c. W12x14: 30,800 lb-ft

STRUCTURAL TEST & INSPECTIONS

1. PROVIDE SPECIAL INSPECTIONS IN ACCORDANCE WITH CHAPTER 17 OF THE 2024 INTERNATIONAL BUILDING CODE BY AN APPROVED AGENCY HIRED BY THE CONTRACTOR. SEE PROJECT SPECIFICATIONS FOR THE STATEMENT OF SPECIAL INSPECTIONS, THE SCHEDULE OF SPECIAL INSPECTIONS AND OTHER SPECIFIC REQUIREMENTS.
2. PROVIDE 3RD PARTY INSPECTION AND TESTING IN ACCORDANCE WITH SPECIFICATION 01 45 35.

POST INSTALLED ANCHORS

1. INSTALL ANCHORS IN ACCORDANCE WITH CURRENT ICC-ES REPORT FOR THE ANCHOR AND RECOMMENDATIONS OF THE MANUFACTURER.
2. A MANUFACTURER'S TECHNICAL REPRESENTATIVE (NOT A DISTRIBUTOR OR AGENT) MUST TRAIN INSTALLERS ON THE PROPER INSTALLATION PROCEDURES AND OBSERVE INITIAL INSTALLATION OF THE ANCHORS.
3. DEFORMED BAR REINFORCEMENT AND ANCHOR RODS USED IN ADHESIVE ANCHORING SYSTEMS MUST CONFORM WITH ASTM A193, GRADE B7. MECHANICAL ANCHORING SYSTEMS MUST BE HOT-DIPPED GALVANZIED STEEL UNLESS NOTED OTHERWISE.
4. PROVIDE THE MINIMUM EMBEDMENT DEPTHS INDICATED IN THE FOLLOWING SCHEDULE UNLESS NOTED OTHERWISE ON A SECTION OR DETAIL.

ANCHOR ø	CONC. EMBEDMENT
1/2"	3 1/2"
5/8"	4"
3/4"	6"

POWER-ACTUATED FASTENERS:

1. POWER-ACTUATED FASTENERS MUST BE APPROVED FOR USE WITH THE REFERENCED CODE BY AN ICC-ES REPORT.
2. FASTENER STYLE, PIN DEPTH, AND PIN LENGTH MUST BE APPROVED FOR USE BY THE FASTENER MANUFACTURER'S PUBLISHED INSTALLATION INSTRUCTIONS FOR MATERIAL TYPES AND THICKNESS.
3. MECHANICALLY ZINC COAT FASTENERS FOR CORROSION PROTECTION.

FOUNDATIONS

1. FOUNDATION DESIGN IS BASED UPON THE GEOTECHNICAL ENGINEERING REPORT BY:
   GEOTECHNICAL CONSULTANT: TTL ASSOCIATES, INC.
   REPORT NUMBER: 1812901
   REPORT DATE: 13 AUGUST 2019
2. ALL FOUNDATION BEARING SURFACES MUST BE OBSERVED BY A GEOTECHNICAL ENGINEER, OR DESIGNEE, TO VERIFY CONFORMANCE WITH THE CONTRACT DOCUMENTS AND GEOTECHNICAL ENGINEERING REPORT. PERFORM OBSERVATIONS PRIOR TO PLACEMENT OF FORMS AND REINFORCING STEEL.
3. OVER-EXCAVATE FOUNDATION AND SLABS ON GRADE AND BACKFILL WITH SELECT GRANULAR FILL. COMPACT AS SPECIFIED. OVER-EXCAVATION IS REQUIRED TO 5 FT BELOW FINISHED GRADE. DO NOT EXTEND OVER-EXCAVATION DEEPER THAN EXISTING FOUNDATIONS.
4. BEAR ALL WALL FOUNDATIONS ON 12" MINIMUM COMPACTED GRANULAR FILL.
5. DO NOT UNDERMINE EXISTING FOUNDATIONS WHEN PERFORMING WORK NEXT TO EXISTING BUILDINGS.

FALL PROTECTION - DEFERRED SUBMITTAL:

1. CONTRACTOR TO HIRE A FALL PROTECTION MANUFACTURER TO DESIGN, FABRICATE, SUPPLY, AND INSTALL A HORIZONTAL LIFELINE FALL PROTECTION SYSTEM IN ACCORDANCE WITH UFC 3-110-03, 29 CFR 1926.500, AND ALL APPLICABLE OSHA STANDARDS.
2. MANUFACTURER SHALL HAVE A MINIMUM OF 5 YEARS OF CONTINUOUS EXPERIENCE IN FALL PROTECTION DESIGN AND MANUFACTURING AND MUST EMPLOY PERSONNEL WITH REGULARLY SCHEDULED COMPETENT PERSONS TRAINING COURSES MANDATED BY OSHA.
3. PROVIDE PRODUCT CERTIFICATES SIGNED BY MANUFACTURER STATING MATERIALS COMPLY WITH REQUIRED PERFORMANCE CRITERIA, PHYSICAL REQUIREMENTS, AND ALL APPLICABLE OSHA STANDARDS.
4. SUBMIT THE DESIGN, SEALED BY AN ENGINEER LEGALLY QUALIFIED TO PRACTICE IN THE STATE OF OHIO FOR COR APPROVAL PRIOR TO FABRICATION.
5. SUBMIT THREE COPIES INCLUDING 1 ELECTRONIC COPY OF THE MANUFACTURER'S INSTRUCTIONS COVERING MAINTENANCE REQUIREMENT AND PARTS CATALOG GIVING A COMPLETE LIST OF REPAIR AND REPLACEMENT PARTS WITH CUTS AND IDENTIFYING NUMBERS.
6. MINIMUM MATERIAL STANDARDS:
   HORIZONTAL CABLE: ASTM A492 STAINLESS STEEL, TYPE 316, 0.3125 INCH MINIMUM DIAMETER, 9,172 LBS MINIMUM BREAKING STRENGTH WITH PERMANENTLY SWEDGED CABLE ENDS.
   DATA PLATE: NON-CORROSIVE MATERIAL. PLATE MUST STATE MAXIMUM SERVICE CAPACITY OF CABLE, MANUFACTURER'S NAME, SERIAL NUMBER, MANUFACTURING DATE, RATED LOAD, AND OTHER PERTINENT DATA AND BE DISPLAYED PROMINENTLY AT CABLE SYSTEM ENTRY POINTS.
   CABLE TENSIONING DEVICES: ASTM A167, TYPE 316 STAINLESS STEEL TURNBUCKLE.
   CABLE TERMINATION CLAMPING SYSTEMS: MATERIAL MATCHING CABLE. CLAMPING SYSTEM SHALL HAVE, AT A MINIMUM, 125 PERCENT CAPACITY OF THE CABLE TENSION.
   HARNESS: MANUFACTURER'S STANDARD FULL BODY HARNESS WITH DOUBLE SHOCK ABSORBER LANYARD.
7. ENSURE STRUCTURE IS ADEQUATE TO SUPPORT COMPLETE HORIZONTAL LIFELINE SYSTEM. PROVIDE BLOCKING OR SUBSTRATE AS REQUIRED BY THE FALL PROTECTION ENGINEER.
8. CONTRACTOR SHALL COORDINATE THE INSTALLATION OF DECK REINFORCEMENT AND ANCHORAGES TO RECEIVE FALL PROTECTION ANCHORS AND THE PLACEMENT OF ROOFING SYSTEM, INSULATION, AND FLASHING TO ENSURE WATER TIGHT INTEGRITY OF THE ROOF.
9. COMPLETE INITIAL INSPECTION AND CERTIFICATION FOR USE. SUBMIT DOCUMENTATION TO THE COR.

CONCRETE

1. CONFORM ALL CONCRETE TO THE REQUIREMENTS OF ACI 301 AND ACI 318.
2. CONCRETE PROPERTIES:
   - 28 DAY COMPRESSIVE STRENGTH (f'_c) UNLESS NOTED OTHERWISE: 4000 PSI
3. COORDINATE SIZE AND LOCATION OF EMBEDDED ITEMS, OPENINGS, SLEEVES, INSERTS, DOWELS, DEPRESSIONS, CURBS, PITS CONDUITS, ETC WITH OTHER DISCIPLINE DRAWINGS INCLUDING BUT NOT LIMITED TO PLUMBING, ELECTRICAL AND ARCHITECTURE AND COORDINATE WITH ACTUAL EQUIPMENT SELECTED PRIOR TO PLACEMENT OF CONCRETE.
4. DO NOT EMBED CONDUITS, PIPES DUCTS, OR SLEEVES IN SLABS OR GRADE BEAMS UNLESS SPECIFICALLY INDICATED ON THE STRUCTURAL DRAWINGS. EMBEDDED ALUMINUM CONDUITS AND PIPES ARE NOT PERMITTED. UTILITIES PLACED BELOW SLABS REQUIRE A MINIMUM OF 3" CLEAR FROM BOTTOM OF SLAB.
5. WHEN SIDES OF GRADE BEAMS ARE EARTH-FORMED, WIDEN EACH SIDE AT LEAST 3 INCHES MORE THAN THE REQUIRED DIMENSION. INCREASE THE MINIMUM CONCRETE COVER FOR REINFORCING ACCORDINGLY BY THE SAME AMOUNT.
6. REFER TO SPECIFICATION SECTION 03 30 00 FOR ADDITIONAL REQUIREMENTS.

REINFORCING STEEL

1. PROVIDE DETAILING, FABRICATION, AND INSTALLATION OF REINFORCING AND ACCESSORIES IN ACCORDANCE WITH ACI 315 ACI 318, ACI SP-66, AND CRSI MSP-1.
2. REINFORCING STEEL:
   TYPICAL: ASTM A615, GRADE 60
   WELDABLE BARS: ASTM A706, GRADE 60.
3. MINIMUM CONCRETE COVER IS AS INDICATED IN THE FOLLOWING SCHEDULE UNLESS NOTED OTHERWISE IN A SPECIFIC SECTION OR DETAIL. INCREASE COVER AS REQUIRED TO ACCOMMODATE EMBEDDED ITEMS, BAR CONGESTION, FIELD CONDITIONS, ETC.

CAST AGAINST & PERMANENTLY EXPOSED TO EARTH		3"
EXPOSED TO EARTH OR WEATHER		2"
NOT EXPOSED TO EARTH OR WEATHER OR IN CONTACT WITH GROUND	SLABS AND WALL	3/4"
	FOUNDATIONS	1 1/2"

4. ALL REINFORCING BAR BENDS ARE MADE COLD.
5. REINFORCING BAR HOOKS ARE ACI STANDARD HOOKS CONFORMING TO THE BEND DIMENSION REQUIREMENTS OF ACI 318 UNLESS NOTED OTHERWISE.
6. DOWELS BETWEEN FOOTINGS AND WALLS ARE THE SAME GRADE, SIZE AND SPACING OR NUMBER AS THE VERTICAL REINFORCING, RESPECTIVELY, UNLESS NOTED OTHERWISE.
7. ALL BARS ARE MARKED SO THEIR IDENTIFICATION CAN BE MADE WHEN THE FINAL IN-PLACE INSPECTION IS MADE.
8. DO NOT CUT REINFORCEMENT UNLESS INDICATED BY SECTION OR DETAIL. AT LOCATIONS OF CONFLICT, SPREAD THE REINFORCEMENT TO ACCOMMODATE PLACEMENT. ADD ADDITIONAL BARS IF NECESSARY TO MAINTAIN SPACING REQUIREMENTS.
9. TACK WELDING OF BARS IS NOT PERMITTED.
10. #11 BARS AND SMALLER MAY BE SPLICED USING MECHANICAL CONNECTORS OR CONTACT LAP SPLICES. BAR LAPS SHOULD BE SECURELY WIRED TOGETHER.
11. TENSION DEVELOPMENT AND REINFORCING BAR LAP SPLICES ARE AS FOLLOWS UNLESS NOTED OTHERWISE:

REINFORCING STEEL

f'c = (4000 PSI) - (GRADE 60 UNCOATED BARS)		
BAR SIZE	TENSION DEVELOPMENT	LAP SPLICE
#3	15"	19"
#4	19"	25"
#5	24"	31"
#6	29"	37"
#7	42"	54"
#8	48"	62"
#9	54"	70"
#10	61"	79"
#11	67"	87"

MASONRY

1. ALL BLOCK UNITS MUST BE HOLLOW CORE, MEDIUM WEIGHT UNITS CONFORMING TO ASTM C-90, LATEST REVISION WITH A MAXIMUM SHRINKAGE OF 0.065% FROM THE SATURATED TO OVEN-DRY CONDITION.
2. MORTAR MUST CONFORM TO ASTM C-270 TYPE S. MORTAR MUST HAVE A MINIMUM COMPRESSIVE STRENGTH OF 2,250 PSI AT 28 DAYS.
3. GROUT MUST HAVE A MINIMUM COMPRESSIVE STRENGTH OF 2,250 PSI AT 28 DAYS WHEN FIELD TESTED IN ACCORDANCE WITH ASTM C1019.
4. MASONRY ASSEMBLAGES MUST HAVE A MINIMUM COMPRESSIVE STRENGTH OF 2,250 PSI AT 28 DAYS WHEN TESTED IN ACCORDANCE WITH ASTM C140.
5. SEE "REINFORCING STEEL SECTION" OF SPECIFICATIONS FOR ASTM SPECIFICATION OF REINFORCING STEEL.
6. MAXIMUM HEIGHT OF GROUT POUR MUST BE AS PER IBC CHAPTER 21.
7. ALL CELLS MUST BE GROUTED SOLID, UNLESS OTHERWISE NOTED.
8. NO COLD JOINTS ARE PERMITTED UNLESS SPECIFICALLY DETAILED.
9. VERTICAL CELLS TO BE FILLED MUST HAVE VERTICAL ALIGNMENT; ANY OVERHANGING MORTAR OR OTHER OBSTRUCTION OF DEBRIS MUST BE REMOVED FROM THE INSIDES OF SUCH CELL WALLS.
10. ALL GROUT MUST BE CONSOLIDATED AT THE TIME OF POURING BY VIBRATING WITH A 3/4" VIBRATOR.
11. PROVIDE 1/4" CLEARANCE FROM INSIDE FACE OF BLOCK MASONRY CELLS AND MINIMUM OF ONE BAR DIAMETER, BUT NOT LESS THAN 3/4" CLEAR DISTANCE BETWEEN PARALLEL BARS.
12. ALL VERTICAL REINFORCING STEEL MUST BE POSITIONED AND HELD IN PLACE BY MEANS OF WIRE SPACERS.
13. PROVIDE STD. 90° HOOK AT END OF ALL HORIZONTAL REINFORCMENT IN CMU WALLS.
14. FOR GROUT POURS OVER 5 FEET, PROVIDE CLEANOUTS IN BOTTOM COURSE AT VERTICAL REINFORCEMENT (32 INCHES MAX). SPECIAL INSPECTION IS REQUIRED.
15. GROUT MUST BE PLACED IN A CONTINUOUS POUR IN GROUT LIFTS NOT EXCEEDING 6 FEET.
16. FORM HORIZONTAL CONSTRUCTION JOINTS BY STOPPING THE GROUT POUR NOT LESS THAN 1/2 INCH BELOW THE TOP OF THE UPPERMOST GROUTED UNIT. HORIZONTAL REINFORCEMENT MUST BE FULLY EMBEDDED IN GROUT.
17. MASONRY CONTROL JOINTS (MCJ) MUST BE PLACED AT A MINIMUM AS FOLLOWS:
    A. MCJ MUST BE SPACED @ A MAXIMUM 24 FEET ON CENTER OR TWICE THE FLOOR TO FLOOR WALL HEIGHT, WHICHEVER IS LESS.
    B. LOCATE JOINTS AT A MAXIMUM OF 1/2 THE MAXIMUM ON CENTER SPACING FROM WALL CORNERS AND INTERSECTIONS. TYPICAL JOINTS MUST BE 3/8" UNLESS NOTED OTHERWISE.
18. ALL MASONRY CONSTRUCTION MUST BE RUNNING BOND.
19. PERFORM MASONRY REPAIR PER SPECIFICATION 04 20 00.

STRUCTURAL STEEL & MISC. METALS

1. DETAIL, FABRICATE AND ERECT STRUCTURAL STEEL IN ACCORDANCE WITH AISC "SPECIFICATION FOR THE DESIGN, FABRICATION AND ERECTION OF STRUCTURAL STEEL FOR BUILDINGS" BY AN APPROVED LICENSED FABRICATOR SHOP.
2. PROVIDE STRUCTURAL STEEL CONFORMING TO THE FOLLOWING STANDARDS:
   A. W AND WT SHAPES: ASTM A992, 50 KSI
   B. OTHER ROLLED SHAPES, PLATES, BARS AND SHEETS: ASTM A572 KSI, U.N.O.
   C. PIPES: ASTM A53 TYPE E OR S GRADE, 35 KSI.
   D. HSS SECTIONS: ASTM A1085 GRADE C, 50 KSI.
   E. BOLTS:
      - HIGH STRENGTH BOLTS: ASTM F3125 GROUP A (GRADE A325-N); GROUP B (GRADE A490-SC) FOR BRACED FRAMES AND DRAG CONNECTIONS.
      - BOLTS MARKED MB OR A307: ASTM A307.
      - HEAVY HEX NUTS: ASTM A563 HOT FORGED.
      - HARDENED STEEL WASHERS: ASTM F436.
   F. ANCHOR BOLTS: ASTM F1554 GR. 55 HEADED BOLT.
   G. COLUMN BASE PLATES, BEAM AND COLUMN STIFFENERS, BEARING PLATES AND GUSSET PLATES: A572 GR. 50.
3. PROVIDE SHOP AND FIELD WELDING OF STRUCTURAL STEEL USING THE ELECTRIC SHIELDED ARC PROCESS OR SUBMERGED ARC PROCESS IN CONFORMANCE WITH AISC SPECIFICATIONS AND AWS "STRUCTURAL WELDING CODE" AND PERFORMED BY CERTIFIED WELDERS ONLY. ELECTRODES MUST BE E-70XX LOW-HYDROGEN TYPE (FOR SHIELDED ARC PROCESS) OR SAW-2 TYPE (FOR SUBMERGED ARC PROCESS).
4. PROVIDE MINIMUM SIZE OF FILLET WELDS AS SPECIFIED IN TABLE J2.4 OF THE AISC MANUAL.
5. PROVIDE MINIMUM EFFECTIVE THROAT THICKNESS OF PARTIAL PENETRATION GROOVE WELDS AS SPECIFIED IN TABLE J2.3 OF THE AISC MANUAL.
6. PROVIDE MINIMUM OF TWO BOLTS PER CONNECTION. MINIMUM BOLT DIAMETER TO BE 3/4 INCH.
7. PROVIDE BOLTS, NUTS AND WASHERS THAT ARE HOT DIP GALVANIZED ACCORDING TO ASTM A 153, CLASS C WHEN USED TO CONNECT STEEL ELEMENTS THAT ARE HOT DIP GALVANIZED AFTER FABRICATION.
8. FABRICATE AND ASSEMBLE STRUCTURAL MEMBERS/ASSEMBLIES IN SHOP TO GREATEST EXTENT POSSIBLE.
9. ERECT BEAMS WITH NATURAL CAMBER UPWARDS. WHERE SPECIFICALLY INDICATED ON DRAWINGS, CAMBER IS INTENDED TO BE FINAL CAMBER AT TIME OF ERECTION, WITHIN A TOLERANCE OF MINUS ZERO TO PLUS 1/8" FOR EACH TEN FEET OF MEMBER LENGTH.
10. SPLICING OF STRUCTURAL STEEL MEMBERS IS PROHIBITED WITHOUT PRIOR APPROVAL BY THE COR.
11. CONFORM TO THE AISC CODE OF STANDARD PRACTICE, FOR ERECTION TOLERANCES. FIELD MODIFICATION TO STRUCTURAL STEEL IS PROHIBITED WITHOUT PRIOR APPROVAL BY THE COR.
12. DO NOT CUT STRUCTURAL STEEL MEMBERS FOR THE WORK OF OTHER TRADES WITHOUT PRIOR REVIEW AND APPROVAL OF THE COR.

STATE OF OHIO
KATRINA R. PEARSON
PE-90610
REGISTERED
PROFESSIONAL ENGINEER

MARK	DESCRIPTION	DATE

DESIGNED BY: K. PEARSON
DRAWN BY: F. SENA
CHECKED BY: K. HAGHIGHI
SUBMITTED BY: K. PEARSON
QUALITY: ANSI D
ISSUE DATE: MAY 2026
ANG PROJECT NO.: PBXP222050
CONTRACT NO.: FA8903-21-D-0008
TASK ORDER NO.: W50S8R23F0009

OHIO AIR NATIONAL GUARD
MANSFIELD LAHM AIR NATIONAL GUARD BASE, OH

JACOBS GOVERNMENT SERVICES
2600 MICHELSON SR. STE 500
IRVINE, CA 92812

MANSFIELD LAHM AIR NATIONAL GUARD BASE, OH
REPAIR B403 FOR CYBER
FA877006
STRUCTURAL GENERAL NOTES

SHEET ID
S-001

TYPE B-3 FINAL

ABBREVIATIONS

ABBREVIATION	DESCRIPTION
AB	ANCHOR BOLT
ADDL	ADDITIONAL
ADJ	ADJACENT
AFF	ABOVE FINISH FLOOR
AISC	AMERICAN INSTITUTE OF STEEL CONSTRUCTION
APPROX	APPROXIMATE(LY)
ARCH	ARCHITECTURAL
ASTM	AMERICAN SOCIETY OF TESTING MATERIALS
AWS	AMERICAN WELDING SOCIETY
BB	BACK TO BACK
BC	BOTTOM CHORD
BET	BETWEEN
BL	BASE LINE
BLDG	BUILDING
BM	BEAM
BOT	BOTTOM
BP	BASE PLATE
BRG	BEARING
BRKT	BRACKET
BS	BOTH SIDES
BSMT	BASEMENT
BVL	BEVELED
BW	BOTH WAYS
BN	BOUNDARY NAILING
C	COMPRESSION
CJ	CONSTRUCTION JOINT
CL	CENTERLINE
CLR	CLEAR OR CLEARANCE
CMU	CONCRETE MASONRY UNIT
COL	COLUMN
CONC	CONCRETE
CONST	CONSTRUCTION
CONT	CONTINUOUS
CONT'D	CONTINUED
CONX	CONNECTION
COR	CONTRACTING OFFICER'S REPRESENTATIVE
CU	CUBIC
CY	CUBIC YARD
D	DEPTH
DBL	DOUBLE
DETL	DETAIL
DIA	DIAMETER
DIAG	DIAGONAL
DIM	DIMENSION
DL	DEAD LOAD
DN	DOWN
DP	DAMP PROOFING
DRWG	DRAWING(S)
DWL	DOWEL
E	EAST
EF	EACH FACE
EJ	EXPANSION JOINT
ELEC	ELECTRICAL
ELEV,EL	ELEVATION
EQ	EQUAL
EQUIP	EQUIPMENT
EW	EACH WAY
EXIST	EXISTING
EXP	EXPANSION
EXT	EXTERIOR
EN	EDGE NAILING
FAB	FABRICATION
FD	FLOOR DRAIN
FDN	FOUNDATION
FF	FINISH FLOOR
FF EL	FINISH FLOOR ELEVATION
FIN	FINISH(ED)
FS	FAR SIDE
FT	FOOT
FTG	FOOTING
GA	GAGE OR GAUGE
GALV	GALVANIZED
GB	GRADE BEAM
HEF	HIGH EXPANSION FOAM
HORIZ	HORIZONTAL
HP	HIGH POINT
HR	HANDRAIL
HT	HEIGHT
HS	HEADED STUD
HSS	HOLLOW STEEL SECTION
ID	INSIDE DIAMETER
IF	INSIDE FACE
IN	INCH
INT	INTERIOR
JT	JOINT
JST	JOIST
K	KIPS (1000 LBS)
KSI	KIPS PER SQUARE INCH
LB,#	POUND
LD	DEVELOPMENT LENGTH
LDG	LANDING
LH	LEFT HAND
LHE	LOW HYDROGEN ELECTRODE
LL	LIVE LOAD
LLH	LONG LEG HORIZONTAL
LLV	LONG LEG VERTICAL
LONG	LONGITUDINAL
LP	LOW POINT
LW	LONG WAY
LWC	LIGHTWEIGHT CONCRETE
LW	LONG WAY
MATL	MATERIAL
MAX	MAXIMUM
MECH	MECHANICAL
MEP	MECHANICAL, ELECTRICAL, PLUMBING
MFR	MANUFACTURE(R)
MID	MIDDLE
MIN	MINIMUM
MISC	MISCELLANEOUS
MS	MIDDLE STRIP
MT	STRUCTURAL TEE CUT FROM MISCELLANEOUS STEEL
N/A	NOT APPLICABLE
NF	NEAR FACE
NFS	NON-FROST-SUSCEPTIBLE FILL
NIC	NOT IN CONTRACT
NO	NUMBER
NOM	NOMINAL
NS	NEAR SIDE
NTS	NOT TO SCALE
OA	OVERALL
OC	ON CENTER
OD	OUTSIDE DIAMETER
OF	OUTSIDE FACE
OPNG	OPENING
OPP	OPPOSITE
OPP HND	OPPOSITE HAND
OPT	OPTIONAL
OWSJ	OPEN WEB STEEL JOIST
PC	PRECAST CONCRETE
PCF	POUNDS PER CUBIC FOOT
PERP	PERPENDICULAR
PG	PRESTRESSED GIRDER
PL	PLATE
PLUMB	PLUMBING
PREFAB	PREFABRICATED
PRELIM	PRELIMINARY
PRMLD	PREMOLDED
PROJ	PROJECTION
PSF	POUNDS PER SQUARE FOOT
PT	POINT
PVC	POLYVINYL CHLORIDE
PVT	PAVEMENT
R	RIGHT, RISER
RAD	RADIUS
RD	ROOF DRAIN
RE:	REFER
RF	RADIO FREQUENCY
REINF	REINFORCING (-ED,-MENT)
REM	REMINDER
REQD	REQUIRED
REV	REVISION
RH	RIGHT HAND
RJ	RUSTICATION JOINT
RND	ROUND
RO	ROUGH OPENING
RW	RETAINING WALL
S	SOUTH
SC	SHEAR CONNECTORS
SCH	SCHEDULE(D)
SECT	SECTION
SHT	SHEET
SIM	SIMILAR
SJ	SAW JOINT
SL	SLOPE
SLRS	SEISMIC-LOAD-RESISTING SYSTEM
SPA	SPACE
SPEC	SPECIFICATION(S)
SPL	SPECIAL
SQ	SQUARE
SS	STAINLESS STEEL
STD	STANDARD
STIFF	STIFFENER
STIR	STIRRUP
STL	STEEL
STR	STRUCTURAL
STRUCT	STRUCTURAL
SW	SHEAR WALL
SYM	SYMMETRICAL
T	TOP, TENSION
T/	TOP OF
T/CONC	TOP OF CONCRETE
T/FD	TOP OF FLOOR DRAIN
T/FTG	TOP OF FOOTING
T/SLAB	TOP OF SLAB
T&B	TOP AND BOTTOM
TEMP	TEMPERATURE
THK	THICKNESS
THRD	THREADED
TOS	TOP OF STEEL
TRD	TREAD(S)
TRANS	TRANSVERSE
TS	STRUCTURAL TUBING
TYP	TYPICAL
UNO	UNLESS NOTED OTHERWISE
USGS	UNITED STATES GEOLOGICAL SURVEY
VERT	VERTICAL
W	WEST, WIDTH, WIDE FLANGE
W/	WITH
W/O	WITHOUT
WP	WORK POINT
WPJ	WEAKENED PLANE JOINT
WT	WEIGHT, STRUCTURAL TEE CUT FROM WIDE FLANGE BEAM
WWF	WELDED WIRE FABRIC
YD	YARD

(ALL ABBREVIATIONS SHOWN ARE NOT NECESSARILY USED IN THE DRAWINGS)

KATRINA R. PEARSON
PE 90510
STATE OF OHIO
PROFESSIONAL ENGINEER

MARK	DESCRIPTION	DATE

DESIGNED BY: K. PEARSON
DRAWN BY: F. SENA
CHECKED BY: K. HAGHIGHI
SUBMITTED BY: K. PEARSON
QA/QC:
ANSI D

ISSUE DATE: MAY 2026
ANG PROJECT NO.: PBXP222050
CONTRACT NO.: FA8803-21-D-0008
TASK ORDER NO.: W50S8R23F0009

OHIO AIR NATIONAL GUARD
MANSFIELD LAHM AIR NATIONAL GUARD BASE, OH

JACOBS GOVERNMENT SERVICES
2600 MICHELSON SR, STE 500
IRVINE, CA 92612

MANSFIELD LAHM AIR NATIONAL GUARD BASE, OH
REPAIR B403 FOR CYBER
FA877006
STRUCTURAL ABBREVIATIONS

SHEET ID
S-002

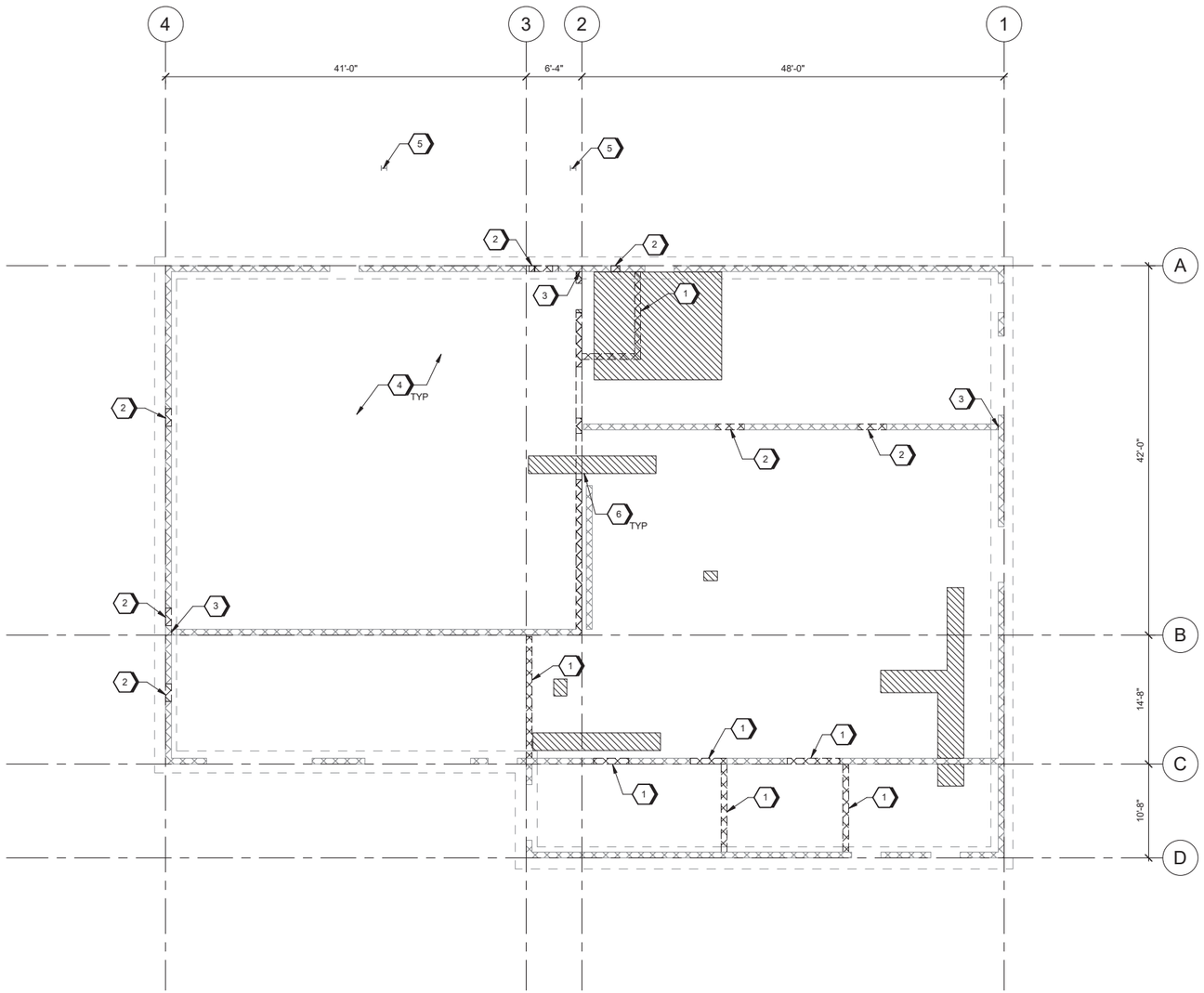

A1 STRUCTURAL DEMOLITION FLOOR PLAN
SCALE 1/8" = 1'-0"

GENERAL SHEET NOTES

A. SEE DRAWING S-001 FOR GENERAL STRUCTURAL NOTES AND SUBGRADE PREPARATION.

B. SEE DRAWINGS S-501 THRU S-521 FOR TYPICAL STRUCTURAL DETAILS.

C. SEE ARCH FLOOR PLANS FOR DIMENSIONS TO DOOR AND WINDOW ROUGH OPENINGS.

D. REFER TO ARCHITECTURAL DEMOLITION DRAWINGS FOR ROOFTOP EQUIPMENT TO BE REMOVED.

#SHEET KEYNOTES

1. DEMOLISH MASONRY FULL HEIGHT.
2. DEMOLISH MASONRY AS REQUIRED, SEE ARCH.
3. SAW CUT FULL HEIGHT AT WALL INTERSECTION.
4. GRIND OFF MISCELLANEOUS ABANDONED UTILITIES, ANCHOR BOLTS, ETC TO BE SMOOTH WITH SLAB SURFACE.
5. EXISTING W8X24 COLUMN TO REMAIN.
6. SAWCUT EXISTING SLAB AS REQUIRED FOR NEW PLUMBING AND DRAINAGE.

LEGEND

INDICATES EXISTING SLAB TO BE SAWCUT AND REMOVED

INDICATES EXISTING MASONRY WALL TO BE DEMOLISHED

GRAPHIC SCALE(S)

PLAN NORTH

0 4' 8' 16' 24'

SCALE: 1/8" = 1'-0"

STATE OF OHIO
KATRINA R. PEARSON
PE.90670
REGISTERED
PROFESSIONAL ENGINEER

MARK	DESCRIPTION	DATE

DESIGNED BY: K. PEARSON
DRAWN BY: F. SENA
CHECKED BY: K. HAGHIGHI
SUBMITTED BY: K. PEARSON
SIZE: ANSI D
ISSUE DATE: MAY 2026
ANG PROJECT NO.: PBXP222050
CONTRACT NO.: FA8803-21-D-0008
TASK ORDER NO.: W50S8R23F0009

OHIO AIR NATIONAL GUARD
MANSFIELD LAHM AIR NATIONAL GUARD BASE, OH

JACOBS GOVERNMENT SERVICES
2600 MICHELSON SR, STE 500
IRVINE, CA 92612

MANSFIELD LAHM AIR NATIONAL GUARD BASE, OH
REPAIR B403 FOR CYBER
FA877006
STRUCTURAL DEMOLITION FLOOR PLAN

SHEET ID
SD101

TYPE B-3 FINAL

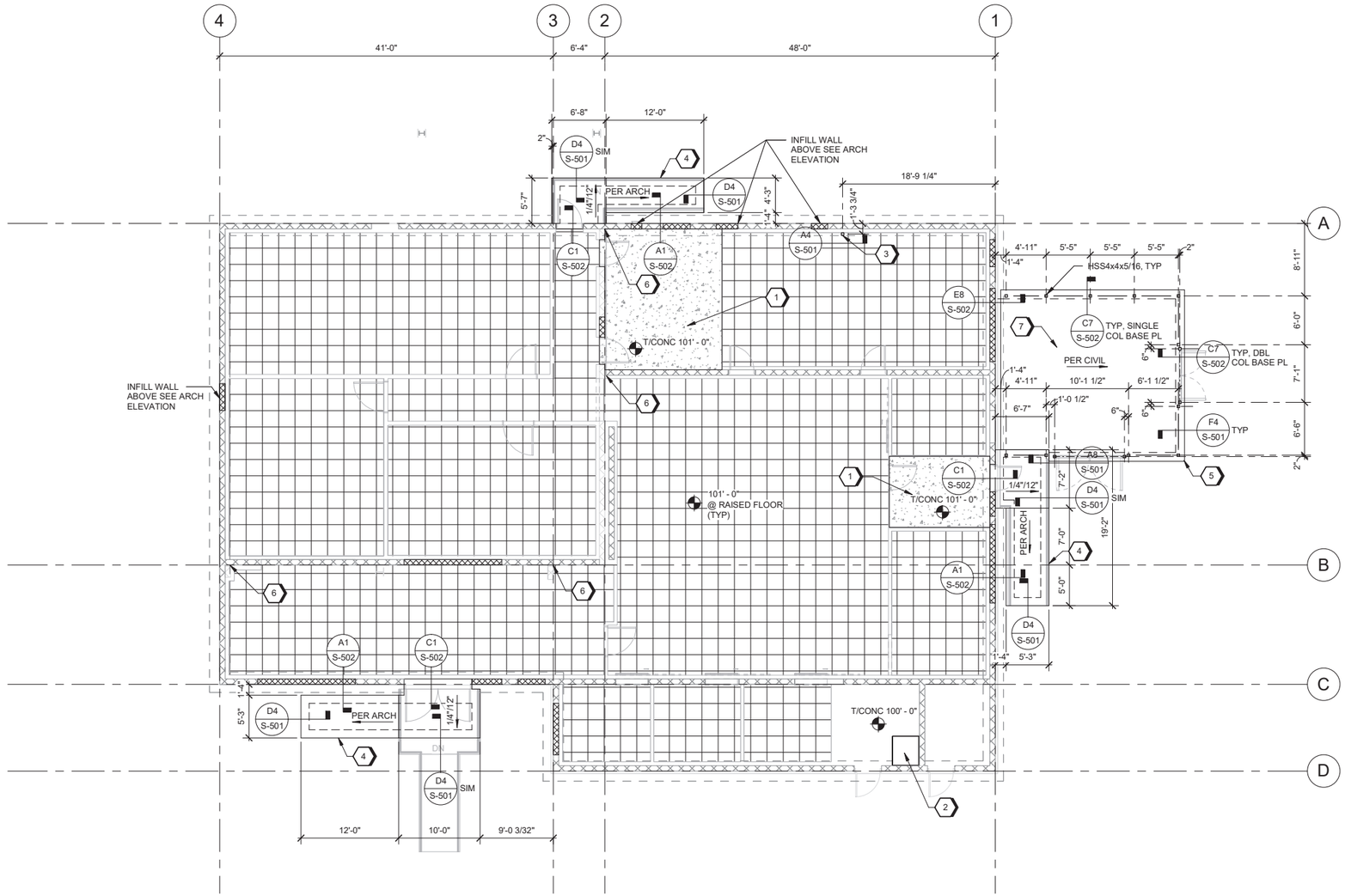

GENERAL SHEET NOTES

A. SEE DRAWING S-001 FOR GENERAL STRUCTURAL NOTES AND SUBGRADE PREPARATION.

B. SEE DRAWINGS S-501 THRU S-521 FOR TYPICAL STRUCTURAL DETAILS.

C. REFERENCE ELEVATION OF 100'-0" = CIVIL DATUM OF 1296.00

SHEET KEYNOTES

1. REINFORCED CONCRETE TOPPING SLAB PER DETAIL D6/S-501.
2. PROVIDE EQUIPMENT HOUSEKEEPING PADS AS REQUIRED SEE F1/S-501.
3. HSS4x4x1/4 PARTITION SUPPORT COLUMN.
4. 4" THICK CONCRETE RAMP ON GRADE WITH #4@12" OC EA WAY.
5. 6" THICK CONCRETE SLAB W/ #4@12" OC EW.
6. 2" STRUCTURAL ISOLATION JOINT
7. THICKEN SLAB AS REQUIRED TO PROVIDE A MINIMUM OF 3" CLEAR COVER AT EQUIPMENT FRAME ANCHORS.

LEGEND

- 12" RAISED ACCESS FLOOR, SEE S-502.
- 8" CMU WALL INFILL W/ #5 @ 16" OC EW PER DETAIL C1/S-510.
- CONCRETE TOPPING SLAB PER DETAIL D6/S-501.
- RAMP SLOPE PER ARCH.

GRAPHIC SCALE(S)

0 4' 8' 16' 24'

SCALE: 1/8" = 1'-0"

PLAN NORTH

A1 STRUCTURAL FOUNDATION PLAN

SCALE 1/8" = 1'-0"

KATRINA R. PEARSON
PE 90570
STATE OF OHIO
PROFESSIONAL ENGINEER

MARK	DESCRIPTION	DATE

DESIGNED BY: K. PEARSON
DRAWN BY: F. SENA
CHECKED BY: K. HAGHIGHI
SUBMITTED BY: D. PEARSON
QA/QC: ANSI D

ISSUE DATE: MAY 2026
ANG PROJECT NO.: PBXP222050
CONTRACT NO.: FA8803-21-D-0008
TASK ORDER NO.: W50S8R23F0009

OHIO AIR NATIONAL GUARD
MANSFIELD LAHM AIR NATIONAL GUARD BASE, OH

JACOBS GOVERNMENT SERVICES
2600 MICHELSON SR, STE 500
IRVINE, CA 92612

MANSFIELD LAHM AIR NATIONAL GUARD BASE, OH
REPAIR B403 FOR CYBER
FA877006
STRUCTURAL FOUNDATION PLAN

SHEET ID
SB101

TYPE B-3 FINAL

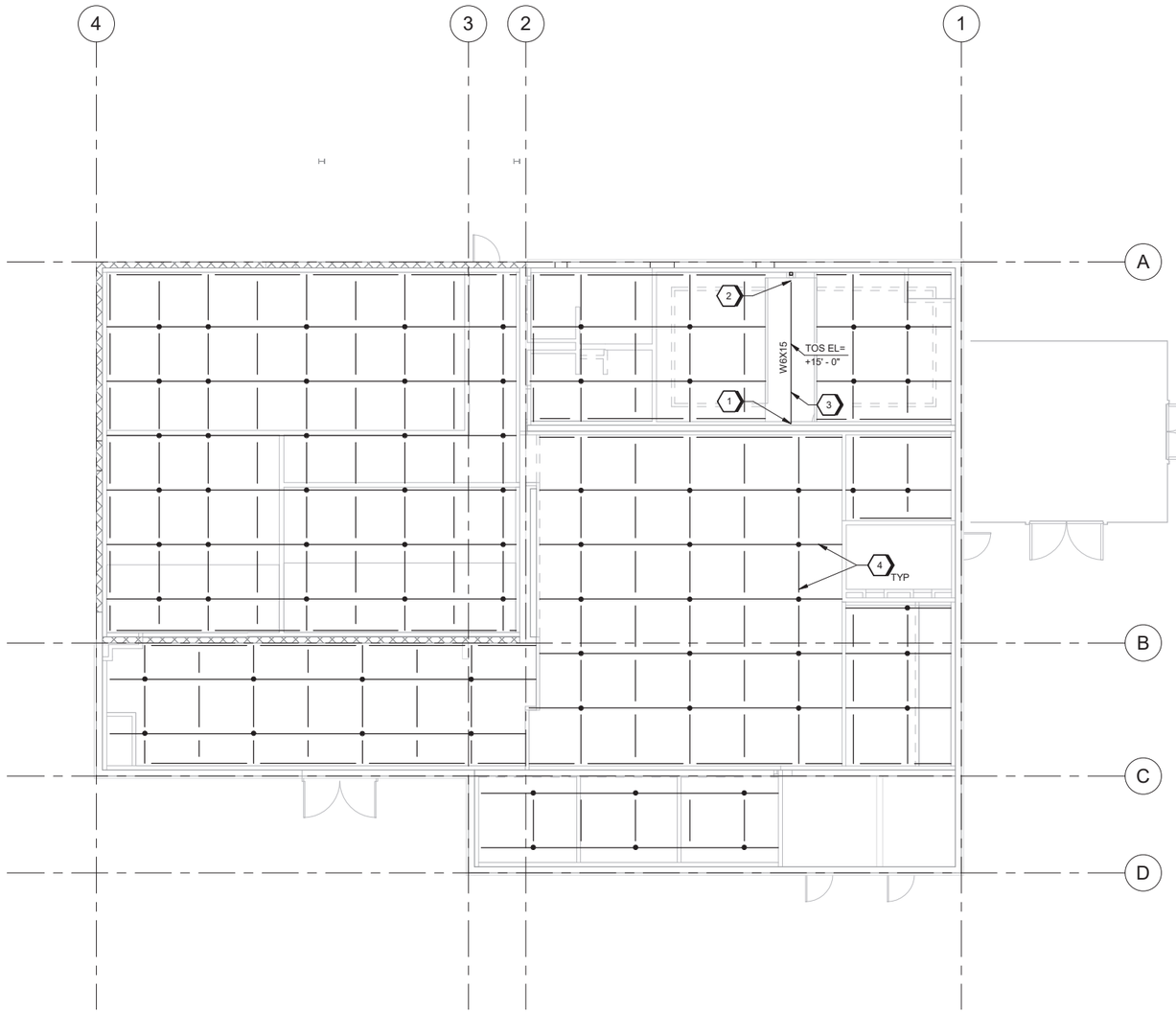

A1 STRUCTURAL CEILING FRAMING PLAN
SCALE 1/8" = 1'-0"

GENERAL SHEET NOTES

A. SEE DRAWINGS S-001 FOR GENERAL STRUCTURAL NOTES AND SUBGRADE PREPARATION.

B. SEE DRAWINGS S-501 THRU S-521 FOR TYPICAL STRUCTURAL DETAILS.

C. REFERENCE ELEVATION OF 100'-0" = CIVIL DATUM OF 1296.00.

D. APPROXIMATE LOCATION OF STRUCTURAL CEILING GRID FRAMING SHOWN. COORDINATE FRAMING LOCATIONS WITH OTHER DISCIPLINES AND DO NOT EXCEED MAXIMUM LOADING PER DETAIL F8/S-521.

#SHEET KEYNOTES

1. SEE DETAIL D3/S-520 FOR PARTITION BEAM TO EXISTING CMU WALL CONNECTION REQUIREMENTS.
2. SEE DETAIL A3/S-520 FOR PARTITION BEAM TO HSS COLUMN CONNECTION REQUIREMENTS.
3. REFER TO ARCHITECTURAL DRAWINGS FOR PARTITION SUPPORT CONFIGURATION.
4. REFER TO DETAIL A1/S-521 FOR CEILING GRID FRAMING.

LEGEND

INDICATES VERTICAL SUPPORT AND CEILING GRID FRAMING PER DETAIL A1/S-521. SEE GENERAL SHEET NOTE D FOR GRID FRAMING SHOWN.

GRAPHIC SCALE(S)

PLAN NORTH

0 4' 8' 16' 24'

SCALE: 1/8" = 1'-0"

STATE OF OHIO
KATRINA R. PEARSON
PE.90570
REGISTERED
PROFESSIONAL ENGINEER

MARK	DESCRIPTION	DATE

DESIGNED BY: K. PEARSON
DRAWN BY: F. SENA
CHECKED BY: K. HAGHIGHI
SUBMITTED BY: K. PEARSON
SIZE: ANSI D

ISSUE DATE: MAY 2026
ANG PROJECT NO.: PBXP222050
CONTRACT NO.: FA8903-21-D-0008
TASK ORDER NO.: W50S8R23F0009

OHIO AIR NATIONAL GUARD
MANSFIELD LAHM AIR NATIONAL GUARD BASE, OH

JACOBS GOVERNMENT SERVICES
2600 MICHELSON SR, STE 500
IRVINE, CA 92812

MANSFIELD LAHM AIR NATIONAL GUARD BASE, OH
REPAIR B403 FOR CYBER
FA877006
STRUCTURAL CEILING FRAMING PLAN

SHEET ID
SF101

TYPE B-3 FINAL

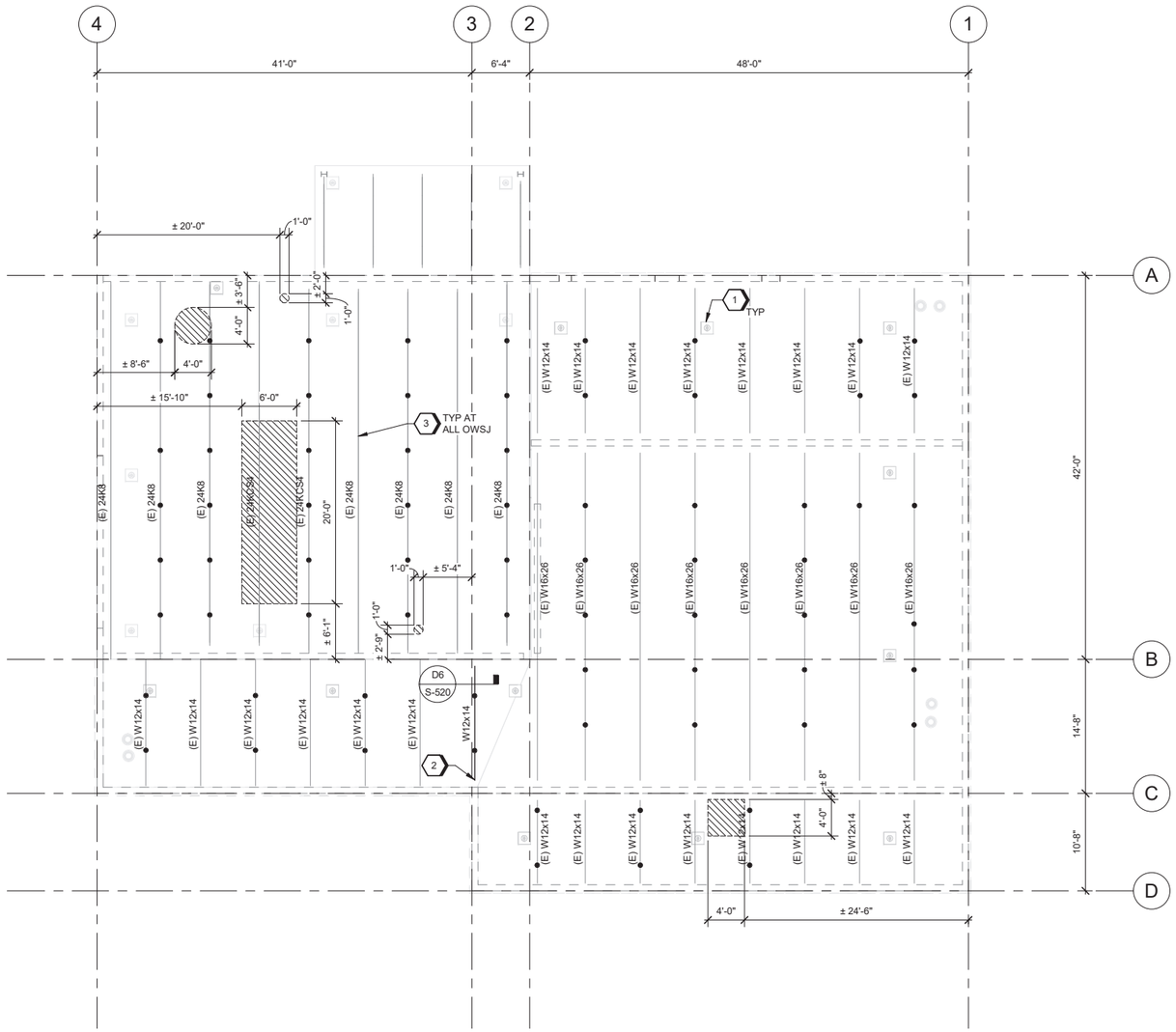

GENERAL SHEET NOTES

A. SEE DRAWING S-001 FOR GENERAL STRUCTURAL NOTES AND SUBGRADE PREPARATION.

B. SEE DRAWINGS S-501 THRU S-521 FOR TYPICAL STRUCTURAL DETAILS.

C. REFERENCE ELEVATION OF 100'-0" = CIVIL DATUM OF 1296.00

#SHEET KEYNOTES

1. ROOF TIE-OFF ANCHORS PER ARCH.
2. SEE DETAIL D1/S-520 FOR NEW ROOF BEAM TO EXISTING CMU WALL CONNECTION REQUIREMENTS.
3. RETROFIT EXISTING OPEN-WEB STEEL JOIST PER DETAIL D9/S520.

LEGEND

INFILL EXISTING METAL ROOF DECK PER DETAIL F1/S-520

EXISTING STEEL BEAM OR OWSJ PER PLAN

INDICATES VERTICAL SUPPORT BELOW, SEE CEILING GRID DETAILS ON SHEET S-521.

GRAPHIC SCALE(S)

PLAN NORTH

0 4' 8' 16' 24'

SCALE: 1/8" = 1'-0"

A1 STRUCTURAL ROOF FRAMING PLAN

SCALE 1/8" = 1'-0"

STATE OF OHIO
KATRINA R. PEARSON
PE-90570
REGISTERED
PROFESSIONAL ENGINEER

MARK	DESCRIPTION	DATE

DESIGNED BY: K. PEARSON
DRAWN BY: F. SENA
CHECKED BY: K. HAGHIGHI
SUBMITTED BY: K. PEARSON
DATE: ANSI D

ISSUE DATE: MAY 2026
ANG PROJECT NO.: PBXP222050
CONTRACT NO.: FA8903-21-D-0008
TASK ORDER NO.: W50S8R23F0009

OHIO AIR NATIONAL GUARD
MANSFIELD LAHM AIR NATIONAL GUARD BASE, OH

JACOBS GOVERNMENT SERVICES
2600 MICHELSON SR, STE 500
IRVINE, CA 92612

MANSFIELD LAHM AIR NATIONAL GUARD BASE, OH
REPAIR B403 FOR CYBER
FA877006
STRUCTURAL ROOF FRAMING PLAN

SHEET ID
SF102

TYPE B-3 FINAL

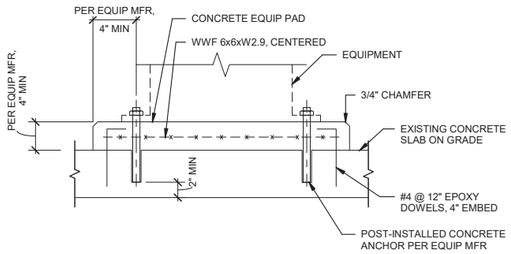

F1 EQUIPMENT PAD TO EXISTING SLAB

SCALE NTS

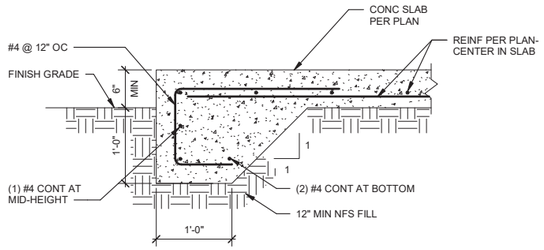

F4 EDGE OF CONCRETE SLAB DETAIL

SCALE NTS

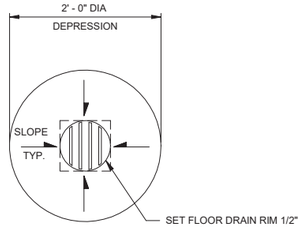

NOTES:
1. SIM AT SQUARE DRAIN.
2. REFER TO PLUMBING DRAWINGS FOR LOCATIONS OF FLOOR DRAINGS.

F6 FLOOR DRAIN DETAIL

SCALE NTS

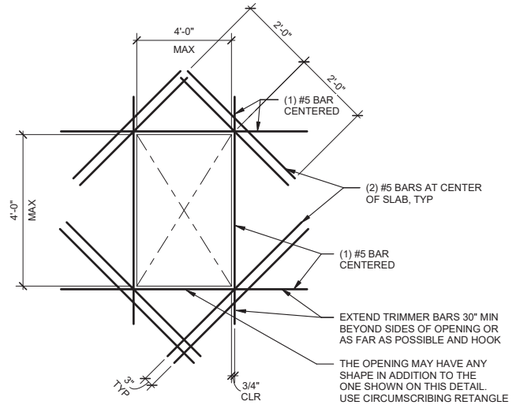

NOTE:
PROVIDE EXTRA BARS (NOT SHOWN) PARALLEL. TO SIDES OF OPENINGS, EQUAL TO AREAS OF INTERRUPTED SLAB BARS. EXTEND FULL LENGTH OF SPAN OR FULL LENGTH OF TOP BARS AS APPLICABLE. THIS DETAIL IS TYPICAL AT OPENINGS UP TO 48" MAXIMUM DIMENSIONS UNLESS NOTED OTHERWISE.

E8 TYPICAL OPENING IN CONCRETE SLAB

SCALE NTS

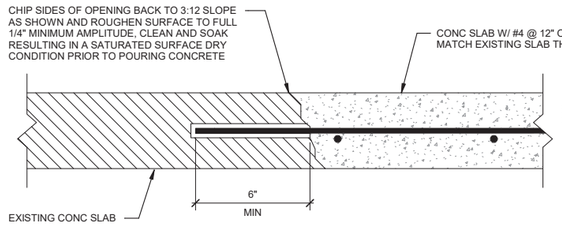

D1 EXISTING CONC SLAB TO NEW CONC SLAB DETAIL

SCALE NTS

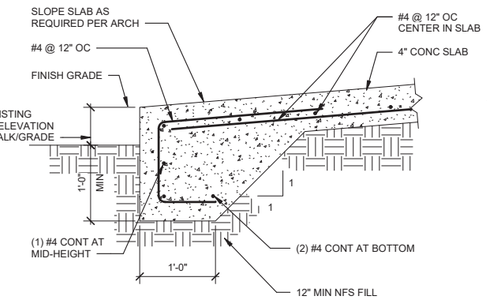

D4 CONCRETE RAMP DETAIL

SCALE NTS

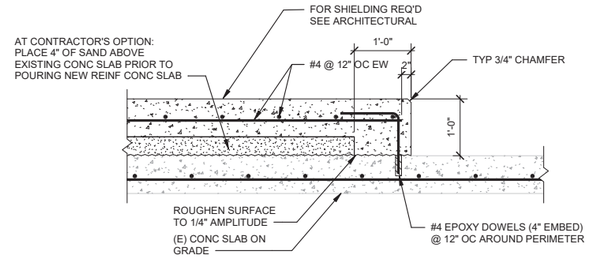

D6 TOPPING SLAB DETAIL

SCALE NTS

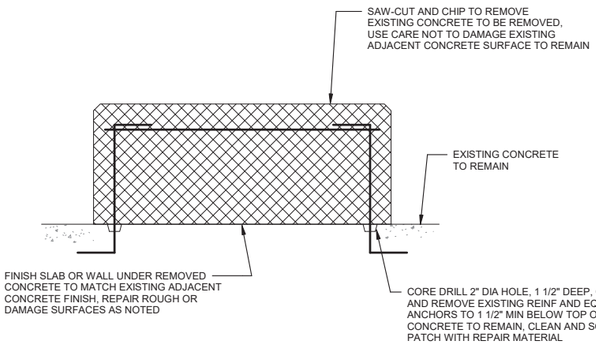

NOTES:
1. REMOVE CONCRETE OUT TO SOUND CONCRETE.
2. IF CHIPPING INTO THE SURFACE OF THE EXISTING SLAB OR WALL TO REMAIN IS REQUIRED, MAKE EDGES PERPENDICULAR TO THE SURFACE. DO NOT FEATHER EDGES.
3. FILL DEFECTIVE AREA WITH AN APPROVED PREPACKAGED REPAIR MATERIAL TO MATCH APPEARANCE OF ADJACENT CONCRETE SURFACES.
4. USE APPROVED BONDING AGENT ON SURFACES TO BE PATCHED PRIOR TO PLACING REPAIR MATERIAL.
5. DEMONSTRATE METHODS FOR REPAIR USING ACTUAL MATERIALS, METHODS, AND BONDING AGENT MANUFACTURER AND REPAIR MATERIAL MANUFACTURER ON TECHNIQUES.

A1 CONCRETE DEMOLITION

SCALE NTS

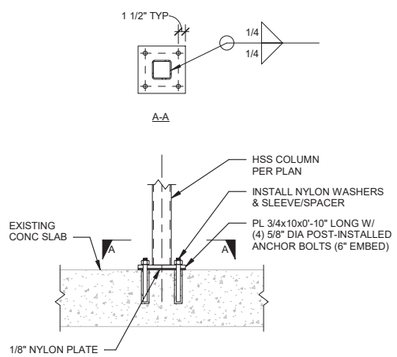

A4 COLUMN BASE DETAIL

SCALE NTS

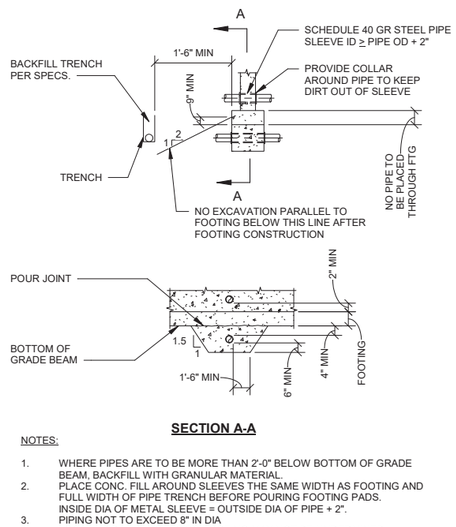

SECTION A-A

NOTES:
1. WHERE PIPES ARE TO BE MORE THAN 2'-0" BELOW BOTTOM OF GRADE BEAM, BACKFILL WITH GRANULAR MATERIAL.
2. PLACE CONC. FILL AROUND SLEEVES THE SAME WIDTH AS FOOTING AND FULL WIDTH OF PIPE TRENCH BEFORE POURING FOOTING PADS. INSIDE DIA OF METAL SLEEVE = OUTSIDE DIA OF PIPE + 2".
3. PIPING NOT TO EXCEED 8" IN DIA.
4. LOCATE PIPE TRENCHES SO FOOTING MAY NOT BE UNDERMINED.

A6 PIPES THROUGH OR BELOW FOOTING

SCALE NTS

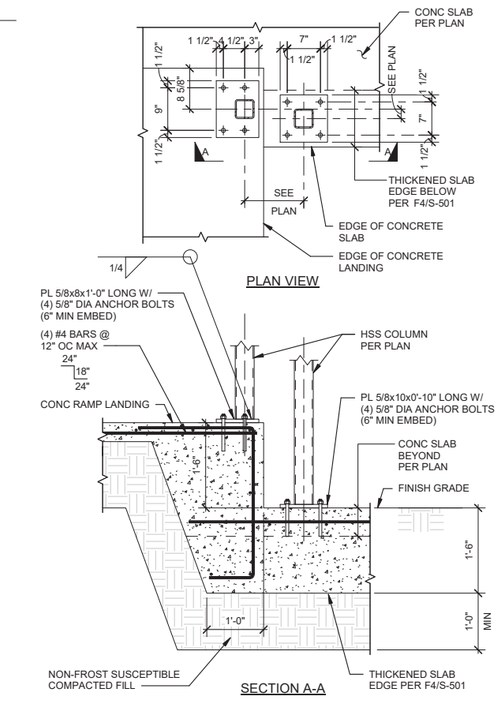

A8 EQUIPMENT YARD FENCE POST FOUNDATION

SCALE NTS

STATE OF OHIO
KATRINA R. PEARSON
PE.90570
REGISTERED
PROFESSIONAL ENGINEER

MARK	DESCRIPTION	DATE

DESIGNED BY: K. PEARSON
DRAWN BY: F. SENA
CHECKED BY: K. HAGHIGHI
SUBMITTED BY: K. PEARSON
SIZE: ANSI D
ISSUE DATE: MAY 2026
ANG PROJECT NO.: PBXP22050
CONTRACT NO.: FA8903-21-D-0008
TASK ORDER NO.: W50S8R23F0009

OHIO AIR NATIONAL GUARD
MANSFIELD LAHM AIR NATIONAL GUARD BASE, OH

JACOBS GOVERNMENT SERVICES
2600 MICHELSON SR, STE 500
IRVINE, CA 92612

MANSFIELD LAHM AIR NATIONAL GUARD BASE, OH
REPAIR B403 FOR CYBER
FA877006
STRUCTURAL DETAILS

SHEET ID
S-501

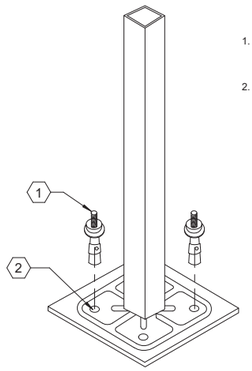

1. ALLOW PEDESTAL ADHESIVE TO CURE PER MANUFACTURER'S RECOMMENDATIONS PRIOR TO INSTALLING ANCHORS.
2. PEDESTAL STANDARD HOLES FOR MECHANICAL FASTENING.

NOTE: PROVIDE WEDGE ANCHORS IF STANDARD PEDESTAL ANCHORAGE IS NOT SUFFICIENT FOR SEISMIC ANCHORAGE PER MANUFACTURER'S DOCUMENTATION.

E1 PEDESTAL ATTACHMENT CONCEPT

SCALE NTS

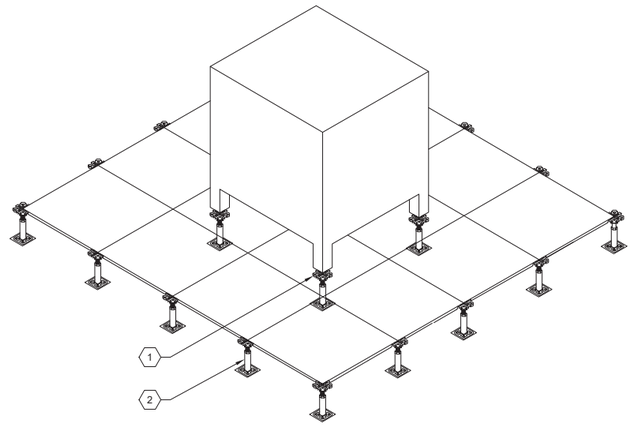

1. ADDITIONAL PEDESTAL (STANDARD TYPE) ADJUSTED TO SUPPORT BOTTOM OF PANEL AT POINT OF LOAD.
2. MANUFACTURER'S STRINGER UNDERSTRUCTURE SYSTEM

NOTES:

A. THIS SUPPORT METHOD MAY BE USED FOR CONDITIONS WHERE EQUIPMENT LOADS WILL BE IN EXCESS OF THE PANEL LOAD RATING. THIS DOES NOT PRECLUDE OTHER OPTIONS FOR EQUIPMENT SUPPORT.

B. USE SPREADER PLATES TO HELP SPREAD THE LOAD OVER THE PANELS DURING MOVE-IN

E3 HEAVY EQUIPMENT SUPPORT CONCEPT AT RAISED ACCESS FLOOR

SCALE NTS

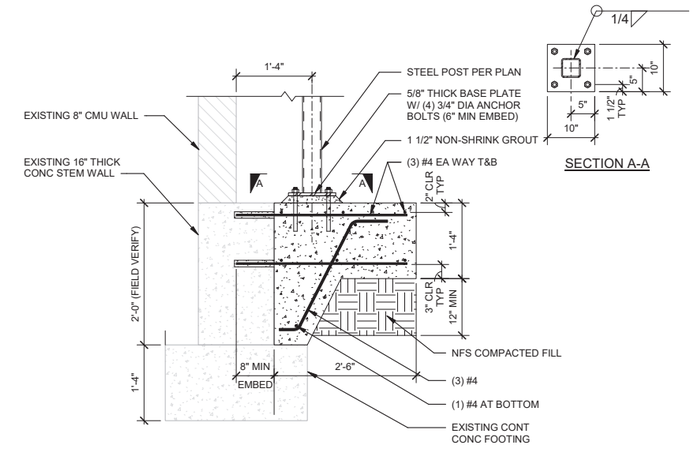

SECTION A-A

E8 EQUIPMENT YARD FENCE POST BASE

SCALE NTS

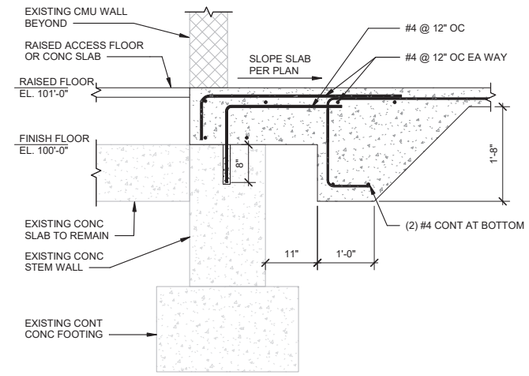

C1 FOUNDATION AT DOOR STOOP

SCALE NTS

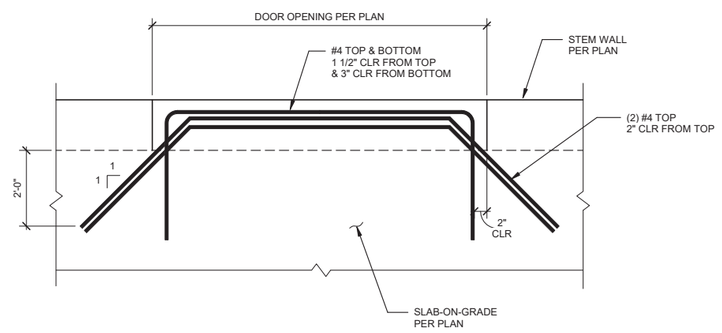

C3 SLAB REINFORCING AT DOOR

SCALE NTS

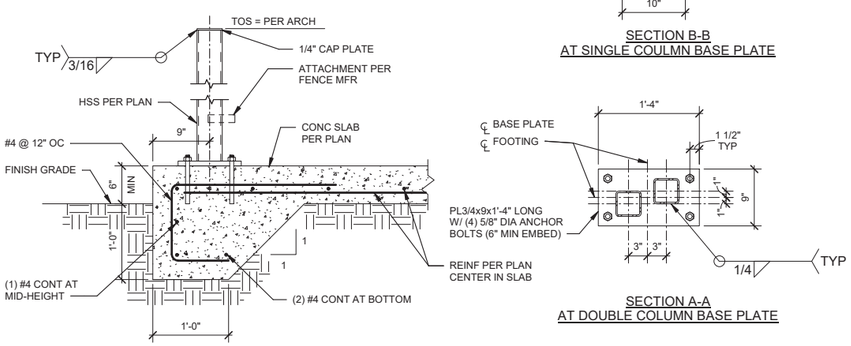

C7 EQUIPMENT YARD FENCE POST BASE

SCALE NTS

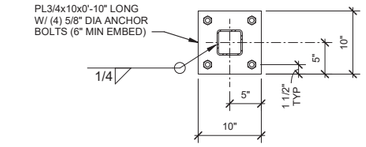

SECTION B-B
AT SINGLE COULMN BASE PLATE

SECTION A-A
AT DOUBLE COLUMN BASE PLATE

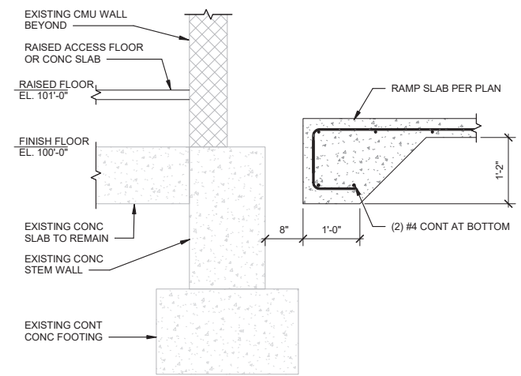

A1 SECTION

SCALE NTS

KATRINA R. PEARSON
PE-90670
STATE OF OHIO
PROFESSIONAL ENGINEER

MARK	DESCRIPTION	DATE

DESIGNED BY: K. PEARSON
DRAWN BY: F. SENA
CHECKED BY: K. HAGHIGHI
SUBMITTED BY: D. PEARSON
ISSUE DATE: MAY 2026
ANG PROJECT NO.: PBXP222050
CONTRACT NO.: FA8803-21-D-0008
TASK ORDER NO.: W50SBR23F0009
ANSI D

OHIO AIR NATIONAL GUARD
MANSFIELD LAHM AIR NATIONAL GUARD BASE, OH

JACOBS GOVERNMENT SERVICES
2600 MICHELSON SR, STE 500
IRVINE, CA 92612

MANSFIELD LAHM AIR NATIONAL GUARD BASE, OH
REPAIR B403 FOR CYBER
FA877006
STRUCTURAL DETAILS

SHEET ID
S-502

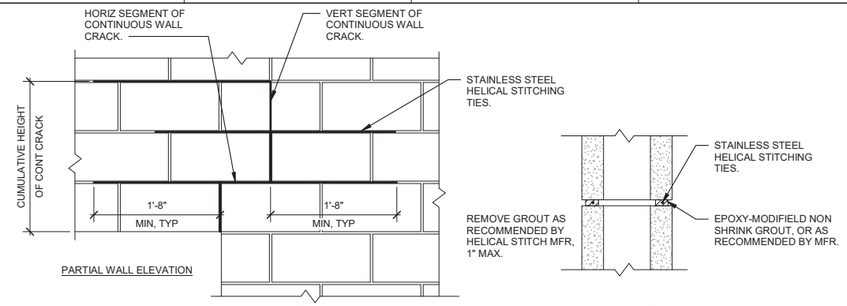

NOTES:

THIS DETAIL APPLIES TO:
- ALL CONTINUOUS CRACKS WITH A CUMULATIVE HEIGHT EXCEEDING 48".
- ALL CONTINUOUS CRACKS WIDER THAN 1/16" WITH A CUMULATIVE HEIGHT EXCEEDING 24".
- ALL CONTINUOUS CRACKS WIDER THAN 1/8" WITH A CUMULATIVE HEIGHT EXCEEDING 8".

F1 CMU CRACK STITCHING

SCALE NTS

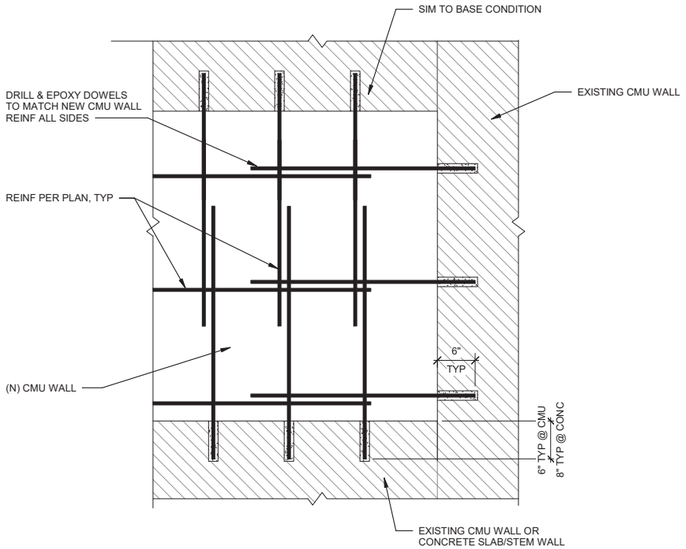

C1 (N) MASONRY WALL TO (E) MASONRY WALL

SCALE NTS

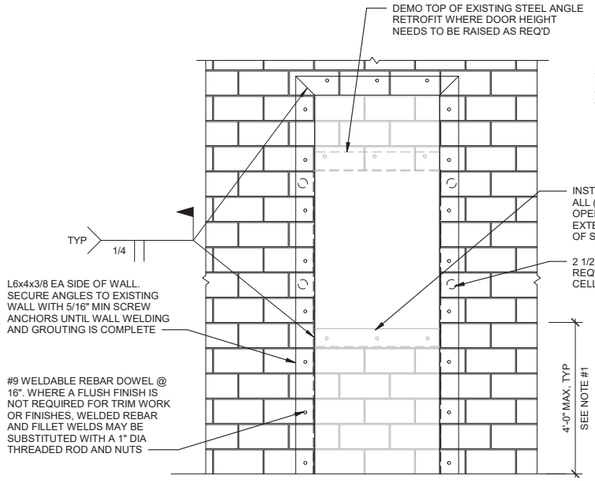

NOTES:
1. AT UNGROUTED WALLS, INSTALL STEEL ANGLES IN SEGMENTS TO PERMIT INTERMITTENT GROUTING OF JAMB CELLS. IN GROUTED WALLS, ANGLES MAY BE INSTALLED IN FULL HEIGHT SEGMENTS.
2. DO NOT CUT REBAR IN EXISTING WALLS. IF REBAR IS ENCOUNTERED, NOTIFY THE ENGINEER.

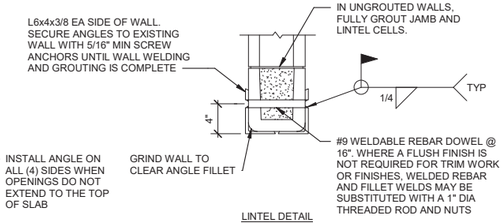

LINTEL DETAIL

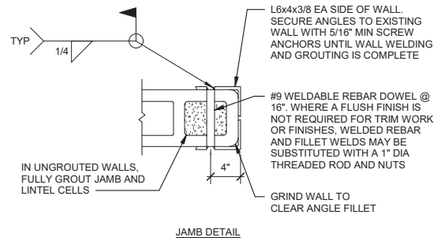

JAMB DETAIL

D6 CMU OPENING RETROFIT

SCALE NTS

MARK	DESCRIPTION	DATE

DESIGNED BY: K. PEARSON
DRAWN BY: F. SENA
CHECKED BY: K. HAGHIGHI
SUBMITTED BY: K. PEARSON
QTY/SIZE: ANSI D
ISSUE DATE: MAY 2026
ANG PROJECT NO.: PBXP222050
CONTRACT NO.: FA8803-21-D-0008
TASK ORDER NO.: W50SBR23F0009

OHIO AIR NATIONAL GUARD
MANSFIELD LAHM AIR NATIONAL GUARD BASE, OH

JACOBS GOVERNMENT SERVICES
2600 MICHELSON SR, STE 500
IRVINE, CA 92812

MANSFIELD LAHM AIR NATIONAL GUARD BASE, OH
REPAIR B403 FOR CYBER
FA877006
STRUCTURAL CMU DETAILS

SHEET ID

S-510

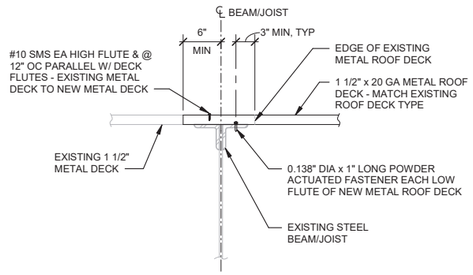

F1 METAL DECK INFILL

SCALE NTS

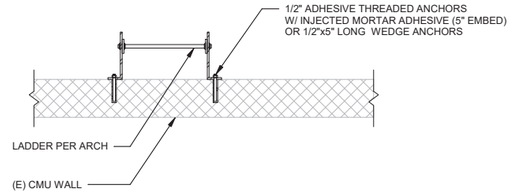

F3 ROOF ACCESS LADDER ANCHORAGE

SCALE NTS

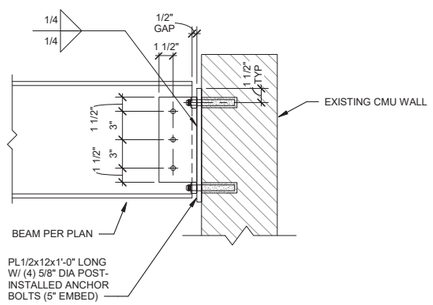

D1 WIDE FLANGE BEAM TO EXISTING CMU WALL

SCALE NTS

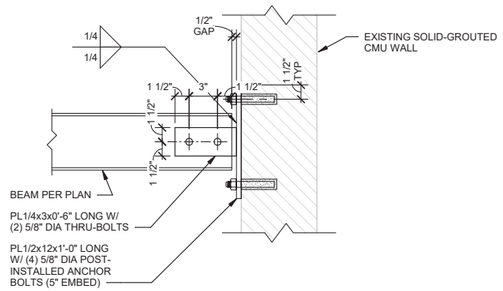

D3 WIDE FLANGE BEAM TO EXISTING CMU WALL

SCALE NTS

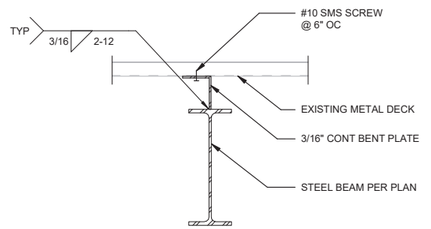

D6 EXISTING METAL DECK TO NEW STEEL BEAM DETAIL

SCALE NTS

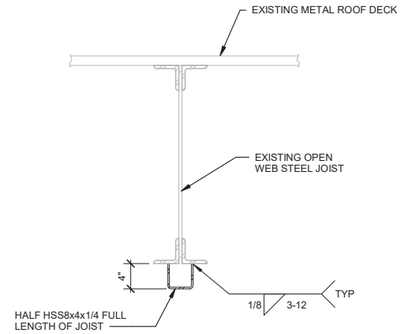

D9 OPEN WEB STEEL JOIST REINFORCEMENT - TYPE A

SCALE NTS

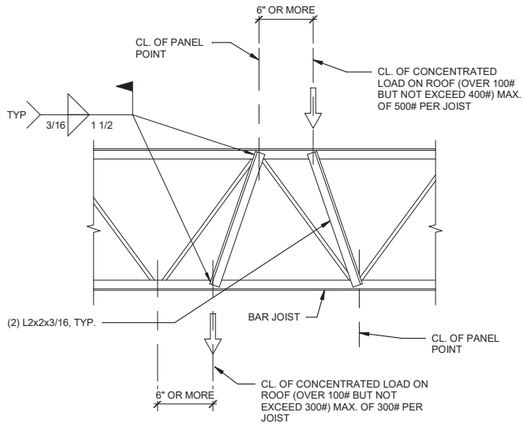

NOTE:
THIS DETAIL APPLIES WHEN LOAD EXCEEDS 50 LBS AND CANNOT BE LOCATED AT A PANEL POINT.

A1 TYPICAL JOIST REINFORCING

SCALE NTS

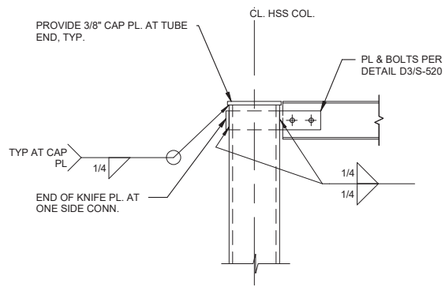

A3 PARTITION BEAM TO HSS COLUMN

SCALE NTS

STATE OF OHIO
KATRINA R. PEARSON
PE.90570
REGISTERED
PROFESSIONAL ENGINEER

MARK	DESCRIPTION	DATE

DESIGNED BY: K. PEARSON	ISSUE DATE: MAY 2026
DRAWN BY: F. SENA	ANG PROJECT NO.: PBXP222050
CHECKED BY: K. HAGHIGHI	CONTRACT NO.: FA8803-21-D-0008
SUBMITTED BY: K. PEARSON	TASK ORDER NO.: W50SBR23F0009
SIZE: ANSI D	

OHIO AIR NATIONAL GUARD
MANSFIELD LAHM AIR NATIONAL GUARD BASE, OH

JACOBS GOVERNMENT SERVICES
2600 MICHELSON SR, STE 500
IRVINE, CA 92612

MANSFIELD LAHM AIR NATIONAL GUARD BASE, OH
REPAIR B403 FOR CYBER
FA877006
STRUCTURAL STEEL DETAILS

SHEET ID

S-520

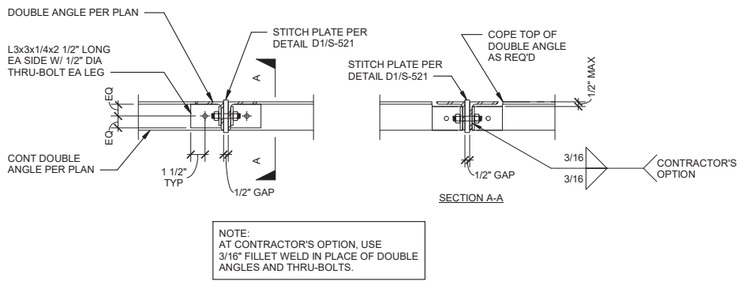

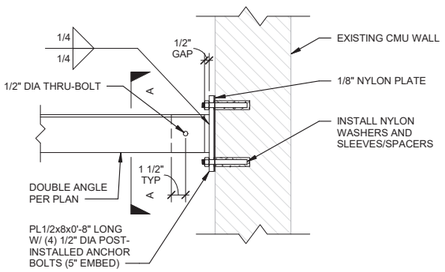

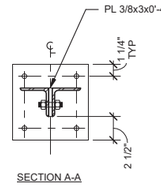

SPAN (in)	CASE 1: MAX ALLOWABLE UNIFORM LOAD (plf)	CASE 2: MAX ALLOWABLE MID-SPAN POINT LOAD (lbs)	CASE 3: MAX ALLOWABLE DUAL POINT LOAD AT 1/4 POINTS (lbs)
≤ 60	950	2700	1800
72	550	2000	1200
84	350	1500	900
96	220	1150	650
108	160	900	520
120	110	700	420
132	85	550	330
144	60	470	270

NOTES:
1. THE LOADS SHOWN IN THE TABLE ARE THE MAXIMUM VALUES THE DOUBLE ANGLE MEMBERS CAN SUPPORT. A THIRD PARTY ENGINEER MUST VERIFY THE LOADS BEING APPLIED TO THE STRUCTURE DO NOT EXCEED THE VALUES SHOWN ABOVE.
2. CASE 1, 2 AND 3 ARE NON-CONCURRENT.
3. ADDITIONAL LOADS CALCULATED BY OTHERS MUST NOT ADD MORE THAN THE MOMENTS LISTED BELOW:
   a. W16x26: 21,200 lb-ft
   b. 24K8 & 24KCS4: 48,000 lb-ft
   c. W12x14: 30,800 lb-ft

F1 STRUCTURAL CEILING GRID INTERSECTION DETAIL

SCALE NTS

F4 STRUCTURAL CEILING LATERAL BRACING DETAIL

SCALE NTS

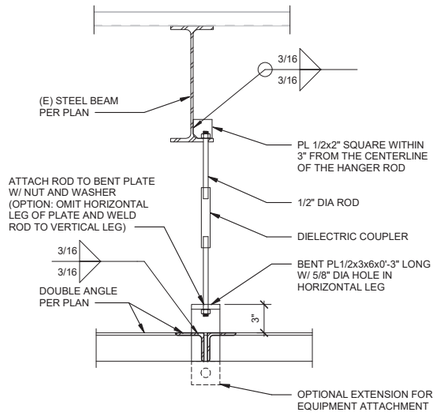

F8 STRUCTURAL CEILING GRID ALLOWABLE LOAD SCHEDULE

SCALE NTS

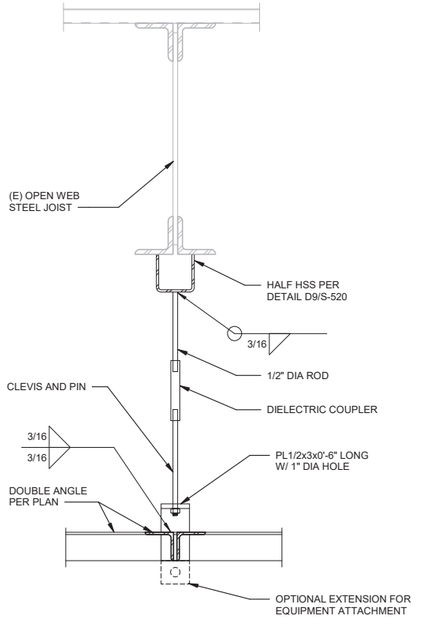

D1 TYPICAL DOUBLE ANGLE INTERMEDIATE CONNECTOR DETAIL

SCALE NTS

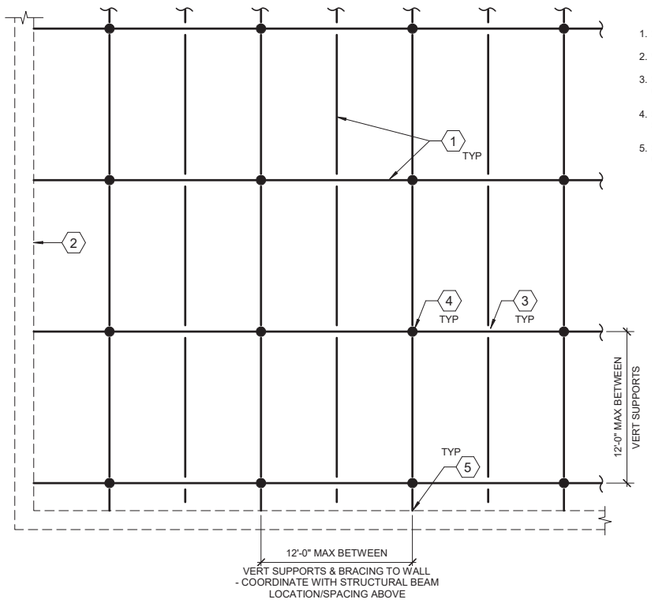

1. 2L3x3x3/16 W/ SPACING PER D1/S-521
2. WALL PER PLAN
3. SEE DETAIL F1/S-521 FOR ANGLE TO ANGLE CONNECTION REQUIREMENTS.
4. SEE DETAIL D4 & C7/S-521 FOR VERTICAL SUPPORT CONNECTION REQUIREMENT.
5. SEE DETAIL F4/S-521 FOR BEAM TO WALL CONNECTION.

D4 VERTICAL SUPPORT DETAIL

SCALE NTS

C7 VERTICAL SUPPORT DETAIL

SCALE NTS

A1 CEILING GRID DETAIL

SCALE NTS

STATE OF OHIO
KATRINA R. PEARSON
PE.90670
REGISTERED
PROFESSIONAL ENGINEER

MARK	DESCRIPTION	DATE

DESIGNED BY: K. PEARSON
DRAWN BY: F. SENA
CHECKED BY: K. HAGHIGHI
SUBMITTED BY: K. PEARSON
SIZE: ANSI D
ISSUE DATE: MAY 2026
ANG PROJECT NO.: PBXP222050
CONTRACT NO.: FA8803-21-D-0008
TASK ORDER NO.: W50SBR23F0009

OHIO AIR NATIONAL GUARD
MANSFIELD LAHM AIR NATIONAL GUARD BASE, OH

JACOBS GOVERNMENT SERVICES
2600 MICHELSON SR, STE 500
IRVINE, CA 92812

MANSFIELD LAHM AIR NATIONAL GUARD BASE, OH
REPAIR B403 FOR CYBER
FA877006
TYPICAL CEILING GRID DETAILS

SHEET ID
S-521

TYPE B-3 FINAL

GENERAL NOTES

A. THE TERM CONTRACTOR USED IN THE FOLLOWING NOTES REFERS TO THE ENTITY UNDER CONTACT WITH THE GOVERNMENT AND THEIR ASSOCIATED SUBCONTRACTORS, MANUFACTURERS, SUPPLIERS, AND INSTALLERS.

B. THE CONTRACTOR MUST DO THE WORK IN ACCORDANCE WITH LOCAL LAWS AND ORDINANCES HAVING JURISDICTION. OTHER THAN THE BUILDING PERMIT, THE CONTRACTOR MUST OBTAIN OTHER PERMITS AND APPROVALS AS REQUIRED BY LAW FOR THE COMPLETION OF THE WORK AND ISSUANCE OF A FULL CERTIFICATE OF OCCUPANCY.

C. DRAWINGS AND CONSTRUCTION NOTES ARE COMPLIMENTARY AND WHAT IS CALLED FOR BY EITHER WILL BE BINDING AS IF CALLED FOR BY ALL. WORK SHOWN OR REFERRED TO ONE DRAWING MUST BE PROVIDED AS THOUGH SHOWN ON DRAWINGS. WHENEVER AN ITEM IS SPECIFIED AND/OR SHOWN ON THE DRAWINGS BY DETAIL OR REFERENCE IT MUST BE CONSIDERED TYPICAL FOR OTHER ITEMS WHICH ARE OBVIOUSLY INTENDED TO BE THE SAME EVEN THOUGH NOT SO DESIGNATED OR SPECIFICALLY NAMED BUT DO SERVE THE SAME FUNCTION.

D. THE WORK TO BE PERFORMED CONSISTS OF FURNISHING LABOR, EQUIPMENT, TOOLS, TRANSPORTATION, SUPPLIES, FEES, MATERIALS, AND SERVICES IN ACCORDANCE WITH THESE NOTES AND DRAWINGS AND PERFORMING THE OPERATIONS NECESSARY TO CONSTRUCT AND COMPLETE AND IN SATISFACTORY CONDITION THE VARIOUS MATERIALS AND EQUIPMENT AT THE LOCATIONS SHOWN. IT IS INTENDED THAT THE DOCUMENTS INCLUDE EVERYTHING REQUISITE AND NECESSARY TO FINISH THE ENTIRE WORK PROPERLY, NOTWITHSTANDING THE FACT THAT EVERY ITEM NECESSARILY REQUIRED MAY NOT BE SPECIFICALLY MENTIONED OR SHOWN. ITEMS WHICH MAY BE REASONABLY CONSTRUED AS INCIDENTAL TO THE PROPER AND SATISFACTORY COMPLETION OF THE WORK IN ACCORDANCE WITH THE INTENT OF THESE NOTES AND DRAWINGS IS HEREBY INCLUDED.

E. THE CHARACTER AND SCOPE OF THE WORK IS ILLUSTRATED BY THE DOCUMENTS AND NOTES. OTHER INFORMATION DEEMED NECESSARY BY THE ARCHITECT WILL BE FURNISHED TO THE CONTRACTOR UPON REQUEST. IT IS TO BE UNDERSTOOD THAT SAID ADDITIONAL INFORMATION OR DOCUMENTS ARE TO BE OF EQUAL FORCE WITH THESE.

F. FULL SIZE OR LARGE-SCALE DETAILS OR DRAWINGS MUST GOVERN SMALL SCALE DRAWINGS WHICH THEY ARE INTENDED TO AMPLIFY. DETAILS OR CONDITIONS INDICATED FOR A PORTION OF THE WORK BUT NOT CARRIED OUT FULLY FOR OTHER PORTIONS MUST APPLY THROUGHOUT TO SIMILAR PORTIONS EXCEPT AS OTHERWISE SPECIFICALLY NOTED. IN EVERY CASE THE GREATER QUANTITY, OR A MORE EXPENSIVE ITEM OR METHOD MUST BE ASSUMED OVER A LESSER QUANTITY OR A LESS EXPENSIVE ONE AND DIMENSIONS MUST BE FIGURED RATHER THAN DETERMINED BY RULE OR SCALE.

G. THE CONTRACTOR MUST NOTIFY THE CONTRACTING OFFICER IMMEDIATELY IF THEY CANNOT COMPLY WITH THE REQUIREMENTS OF THESE NOTES AND DRAWINGS.

H. THE CONTRACTOR MUST SUBMIT FABRICATION SHOP DRAWINGS, SAMPLES, AND FIXTURE CUTS FOR THE CONTRACTING OFFICER'S REVIEW AS REQUIRED AND/OR INDICATED ON DRAWINGS. THE CONTRACTING OFFICER'S REVIEW WILL NOT BE CONSTRUED AS AN INDICATION THAT SUBMITTAL IS CORRECT OR SUITABLE NOR THAT WORK REPRESENTED BY SUBMITTAL COMPLIES WITH THE DRAWINGS, EXCEPT AS TO MATTERS OF FINISH, COLOR, AND OTHER ESTHETIC MATTERS. ACTION NOTED ABOVE DOES NOT RELIEVE THE CONTRACTOR FROM RESPONSIBILITY TO COORDINATE TRADES AND TO CHECK QUANTITIES AND DIMENSIONS AGAINST CONDITIONS IN THE FIELD. CONTRACTORS AND SUBCONTRACTORS MUST ASSUME RESPONSIBILITY FOR ERRORS ON THEIR SUBMITTALS.

I. MATERIALS REQUIRED FOR THE PERFORMANCE OF THIS CONTRACT MUST BE NEW AND OF THE BEST QUALITY OF KINDS SPECIFIED, SUBJECT TO THE APPROVAL OF THE CONTRACTING OFFICER. THE USE OF OLD OR SECOND-HAND MATERIALS IS STRICTLY FORBIDDEN. THE CONTRACTOR MUST FURNISH SATISFACTORY EVIDENCE AS TO THE KIND AND QUALITY OF MATERIALS AND WORKMANSHIP. MATERIALS MUST BE USED IN ACCORDANCE WITH MANUFACTURER'S PRINTED INSTRUCTIONS. UPON REQUEST, THE MANUFACTURER'S REPRESENTATIVE MUST GO TO THE SITE AND INSTRUCT THE MECHANICS IN THE USE OF THE MATERIALS OR MUST SUPERVISE THEIR USE.

J. MATERIALS DELIVERED OR WORK PERFORMED, CONTRARY TO THE DRAWINGS AND SPECIFICATIONS AND APPROVED SHOP DRAWINGS, MUST BE REMOVED BY THE CONTRACTOR AT THEIR OWN EXPENSE, AND THE SAME MUST BE REPLACED WITH OTHER MATERIALS OR WORK SATISFACTORY TO THE ARCHITECT. THE CONTRACTOR MUST ALSO ASSUME THE COST OF REPLACING THE WORK WHICH MAY BE DISTURBED.

K. PROVIDE ADEQUATE BACKUP AND BLOCKING FOR ALL WALLS OR CEILING MOUNTED EQUIPMENT, ARCHITECTURAL WOODWORK, HANDRAILS LIGHTING OR OTHER MISCELLANEOUS ITEMS AS SHOWN ON DRAWINGS TO ASSURE A SECURE INSTALLATION.

L. REPETITIVE FEATURES ARE NOT DRAWN IN THEIR ENTIRETY AND MUST BE COMPLETELY PROVIDED AS IF DRAWN IN FULL.

M. LOCATE DOOR FRAMES AS PER THE FOLLOWING, UNLESS OTHERWISE DIMENSIONED IN THE DOCUMENTS:
   1. FOR DOORS INDICATED ADJACENT TO A PERPENDICULAR WALL, LOCATE DOOR JAMB FACE AT 4-INCHES FROM FACE OF STUD ON HINGE SIDE OF DOOR
   2. FOR DOORS LOCATED AT THE CENTER OF A ROOM OR CORRIDOR, LOCATE THE CENTERLINE OF THE DOOR ON THE CENTERLINE OF THE ROOM OR CORRIDOR

N. MOUNT ALL OVERHEAD FEATURES WEIGHING 31 POUNDS OR MORE (EXCLUDING DISTRIBUTED SYSTEMS SUCH AS SUSPENDED CEILINGS THAT COLLECTIVELY EXCEED THAT WEIGHT) TO MINIMIZE THE LIKELYHOOD THAT THEY WILL FALL AND INJURE BUILDING OCCUPANTS. DESIGN ALL EQUIPMENT MOUNTINGS TO RESIST FORCES OF 0.5 TIMES THE COMPONENT WEIGHT IN ANY HORIZONTAL DIRECTION AND 1.5 TIMES THE COMPONENT WEIGHT IN THE DOWNWARD DIRECTION. THIS DOES NOT PRECLUDE THE NEED TO DESIGN ARCHITECTURAL FEATURE MOUNTINGS FOR FORCES REQUIRED BY OTHER CRITERIA SUCH AS SEISMIC STANDARDS.

ABBREVIATIONS

ABBREVIATION	DESCRIPTION
ABA	ARCHITECTURAL BARRIERS ACT
ACT	ACOUSTICAL CEILING TILE
ADJ	ADJUST
AFF	ABOVE FINISHED FLOOR
ALT	ALTERNATE
ALUM	ALUMINUM
ANOD	ANODIZED
APPROX	APPROXIMATE
ARCH	ARCHITECT
B/T	BETWEEN
BD	BOARD
BLDG	BUILDING
BM	BEAM
BO	BOTTOM OF
CAB	CABINET
CFCI	CONTRACTOR FURNISHED CONTRACTOR INSTALLED
CJ	CONTROL / CONSTRUCTION JOINT
CL	CENTERLINE
CLG	CEILING
CLR	CLEAR
CMU	CONCRETE MASONRY UNIT
CO	CONTRACTING OFFICER
COL	COLUMN
CONC	CONCRETE
CONT	CONTINUE / CONTINUOUS
CORR	CORRIDOR
CPT	CARPET / COMMON PATH OF TRAVEL
CT	CERAMIC TILE
CTR	CENTER
DEG	DEGREE
DEMO	DEMOLITION
DET	DETAIL
DIA	DIAMETER
DIM	DIMENSION
DN	DOWN
DR	DRAIN
DS	DOWNSPOUT
DWG	DRAWING
E	EAST
EA	EACH
EJ	EXPANSION JOINT
EL	ELEVATION
ELEC	ELECTRIC / ELECTRICAL
EQ	EQUAL
EQUIP	EQUIPMENT
EWC	ELECTRIC WATER COOLER
EXIST	EXISTING
EXP	EXPANSION / EXPOSED / EXPAND
EXT	EXTERIOR
FD	FLOOR DRAIN
FE	FIRE EXTINGUISHER
FEC	FIRE EXTINGUISHER CABINET
FF	FINISH FACE/FLOOR
FFE	FIXTURES, FURNISHINGS AND EQUIPMENT
FO	FACE OF
FR	FRAME / FIRE RATING / FIRE RESISTANT
FT	FOOT, FEET
GA	GAUGE
GALV	GALVANIZED
GFCI	GOVERNMENT FURNISHED CONTRACTOR INSTALLED
GL	GLASS
GYP	GYPSUM
H	HIGH
HDW	HARDWARE
HM	HOLLOW METAL
HORIZ	HORIZONTAL
HP	HIGH POINT
HT	HEIGHT
ID	INSIDE DIAMETER
IN	INCHES
INSUL	INSULATION / INSULATED
INT	INTERIOR
J-BOX	JUNCTION BOX
JAN	JANITOR CLOSET
LAV	LAVATORY
LB	POUND
LP	LOW POINT
MATL	MATERIAL
MAX	MAXIMUM
MECH	MECHANICAL
MFR	MANUFACTURER
MIN	MINIMUM / MINUTE
MISC	MISCELLANEOUS
ML	MATCH LINE
MO	MASONRY OPENING
MTD	MOUNTED
MTL	METAL
N	NORTH
NIC	NOT IN CONTRACT
NO	NUMBER
NOM	NOMINAL
NTS	NOT TO SCALE
O/	OVER
OC	ON CENTER
OD	OUTSIDE DIAMETER / DIMENSION
OPH	OPPOSITE HAND
OPNG	OPENING
OPP	OPPOSITE
OPT	OPTIONAL
PLYWD	PLYWOOD
PNL	PANEL
PRELIM	PRELIMINARY
PSF	POUNDS PER SQUARE FOOT
PSI	POUNDS PER SQUARE INCH
PT	PAINT
PVC	POLYCINYL CHLORIDE
QTY	QUANTITY
R	RADUIS / RISER
RAF	RAISED ACCESS FLOOR

ABBREVIATIONS

ABBREVIATION	DESCRIPTION
RB	RESILIENT BASE
RCP	REFLECTED CEILING PLAN
RD	ROOF DRAIN / ROAD
REF	REFERENCE
REQD	REQUIRED
REV	REVISION
RF	RADIO FREQUENCY
RM	ROOM
RND	ROUND
RO	ROUGH OPENING
RT	RIGHT
S	SOUTH
SCHED	SCHEDULE
SECT	SECTION
SF	SQUARE FOOT
SIM	SIMILAR
SPEC	SPECIFICATION
SQ	SQUARE
SS	STAINLESS STEEL
STD	STANDARD
STL	STEEL
STOR	STORAGE
SUSP	SUSPENDED
T&B	TOP AND BOTTOM
TEL	TELEPHONE
TER	TELECOM EQUIPMENT ROOM
THRU	THROUGH
TO	TOP OF
TYP	TYPICAL
UON	UNLESS OTHERWISE NOTED
V	VOLT
VAR	VARIATION
VCT	VINYL COMPOSITION TILE
VERT	VERTICAL
VEST	VESTIBULE
VIF	VERIFY IN FIELD
W/	WITH
W/O	WITHOUT
WC	WATER CLOSET
WD	WOOD
WH	WATER HEATER
WT	WEIGHT

SOUND RATED CONSTRUCTION NOTES

A. AT PARTITION WALLS, PROVIDE CONTINUOUS BEADS OF ACOUSTIC SEALANT AT JUNCTURE OF BOTH FACES OF RUNNERS WITH FLOOR AND CEILING CONSTRUCTIONS, AND WHEREVER GYPSUM BOARD ABUTS DISSIMILAR MATERIALS, PRIOR TO INSTALLATION OF GYPSUM BOARD.AT PARTITION WALLS, PROVIDE CONTINUOUS BEADS OF ACOUSTIC SEALANT AT JUNCTURE OF BOTH FACES OF RUNNERS WITH FLOOR AND CEILING CONSTRUCTIONS, AND WHEREVER GYPSUM BOARD ABUTS DISSIMILAR MATERIALS, PRIOR TO INSTALLATION OF GYPSUM BOARD.

B. AT CEILINGS, PROVIDE CONTINUOUS BEADS OF SEALANT WHEREVER GYPSUM BOARD ABUTS DISSIMILAR MATERIALS.

C. PROVIDE CONTINUOUS BEAD OF SEALANT BEHIND FACES OF CONTROL JOINTS PRIOR TO INSTALLATION OF CONTROL JOINT ACCESSORIES.

D. SOUND SEAL ALL PANEL TERMINATIONS IN DOOR FRAMES BY APPLYING A CONTINUOUS BEAD OF ACOUSTICAL SEALANT INSIDE DOOR FRAME THROAT JUST PRIOR TO INSERTING FACING PANEL INTO FRAME. DO NOT TERMINATE GYPSUM PANEL AGAINST TRIM RETURN.

E. AFTER INSTALLATION OF SOUND ISOLATION BOARD BASE LAYER, CUT FACE LAYER SHEET ½ INCH LESS THAN FLOOR-TO-CEILING HEIGHT AND POSITION WITH ¼ INCH OPEN SPACE BETWEEN GYPSUM BOARD AND FLOOR, CEILING AND DISSIMILAR VERTICAL CONSTRUCTION. FILL ½ INCH OPEN SPACE WITH CONTINUOUS SEALANT BEADS AFTER INSTALLATION OF FACE LAYER.

F. AT OPENINGS AND CUTOUTS, FILL SPACES BETWEEN GYPSUM BOARD AND FIXTURES, CABINETS, DUCTS, AND OTHER FLUSH PENETRATING ITEMS, WITH A CONTINUOUS BEAD OF SEALANT.

G. COMPLETELY BUTTER SIDES AND BACKS OF ELECTRICAL BOXES WITH ACOUSTICAL SEALANT TO CLOSE ALL OPENINGS AND JOINTS; OR ENCLOSE BOXES WITH PUTTY PADS IN STRICT ACCORDANCE WITH MANUFACTURER'S INSTRUCTIONS.

H. WHERE SOUND-RATED PARTITION WALLS INTERSECT NON-RATED GYPSUM BOARD PARTITION WALLS, EXTEND SOUND-RATED CONSTRUCTION TO COMPLETELY CLOSE SOUND FLANKING PATHS THROUGH NON-RATED CONSTRUCTION. SEAL JOINTS BETWEEN FACE LAYERS AT VERTICAL INTERIOR ANGLES OF INTERSECTING PARTITIONS.

I. INSTALL SOUND ATTENUATION BLANKETS IN SOUND-RATED PARTITIONS, FURRING WALLS AND CEILING SPACES WHERE INDICATED.

J. COMPLETELY FILL SPACE BETWEEN STUDS AND FRAMING TO FULL HEIGHT OF WALL OR CEILING SPACE.

K. FIT CAREFULLY BEHIND ELECTRICAL OUTLETS AND OTHER WORK PENETRATING SOUND-RATED CONSTRUCTION.

L. INSTALL HEAD-OF-WALL INSULATION IN GAPS BETWEEN STEEL DECK FLUTES AND TOPS OF SOUND-RATED PARTITIONS WHERE APPLICABLE.

M. SEE SHEET A-520 FOR ACOUSTICAL TESTING REQUIREMENTS.

LICENSED ARCHITECT
DONALD WINSTEAD
No. ARC.2020029
05-08-26
STATE OF OHIO

MARK	DESCRIPTION	DATE

ISSUE DATE: MAY 2026
AMG PROJECT NO.: PBXP222050
CONTRACT NO.: FA8903-21-D-0008
TASK ORDER NO.: W50S8R23F0009

DESIGNED BY: R. SMITH
DRAWN BY: E. NEWSUM
CHECKED BY: D. WINSTEAD
SUBMITTED BY: D. PEARSON
SIZE: ANSI D

OHIO AIR NATIONAL GUARD
MANSFIELD LAHM AIR NATIONAL GUARD BASE, OH

JACOBS GOVERNMENT SERVICES
2600 MICHELSON SR, STE 500
IRVINE, CA 92612

MANSFIELD LAHM AIR NATIONAL GUARD BASE, OH
REPAIR B403 FOR CYBER
FA877006
ARCHITECTURAL GENERAL NOTES AND ABBREVIATIONS

SHEET ID
A-001

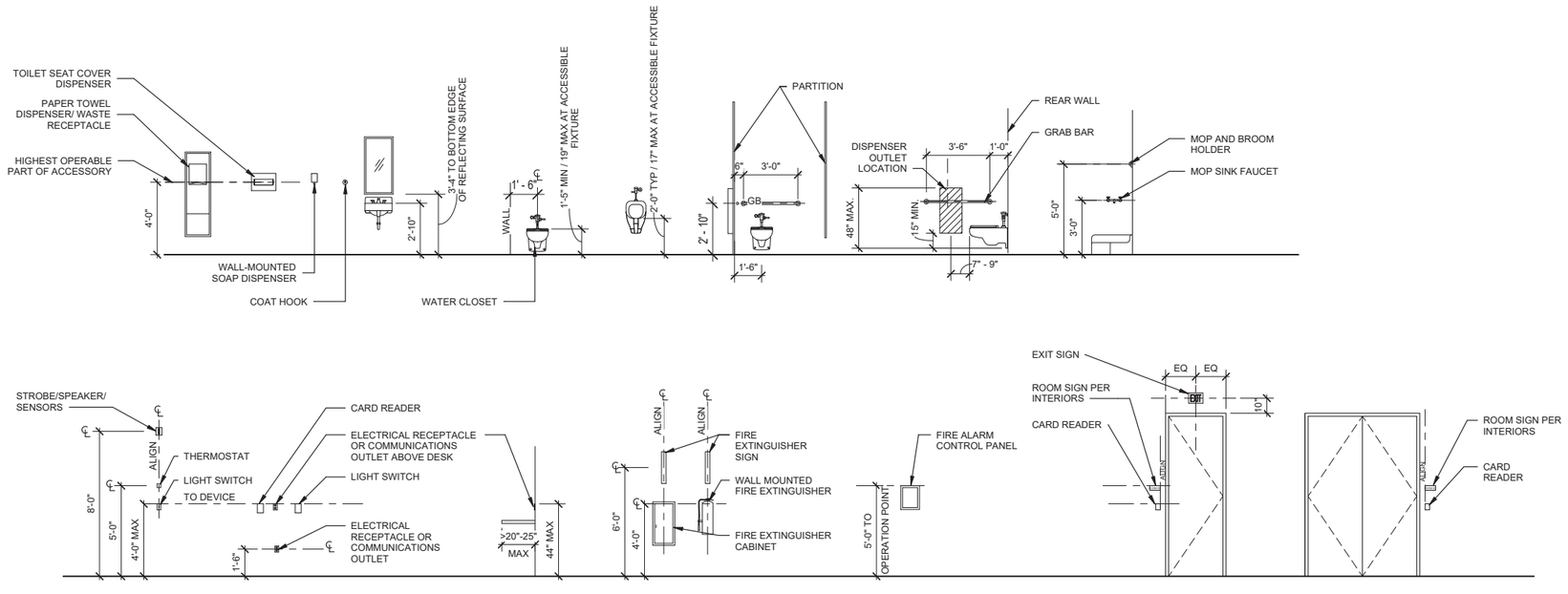

D1 TYPICAL ACCESSIBLE MOUNTING HEIGHTS/ LOCATIONS/ACCESSORIES

SCALE 1/4" = 1'-0"

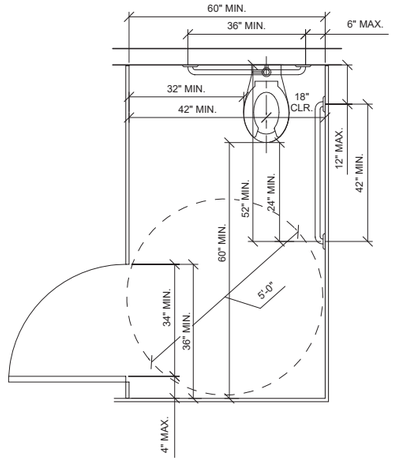

STANDARD ACCESSIBLE TOILET STALL
DOOR OPENING AT SIDE OF STALL

A1 TYPICAL ACCESSIBLE STALL

SCALE 1/2" = 1'-0"

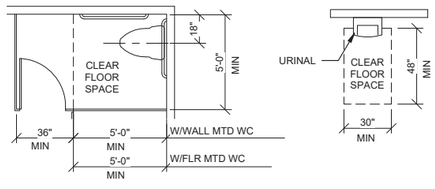

NOTES:

1. REAR WALL GRAB BAR TO BE 36" MIN 33-36" AFF.
2. SIDE WALL GRAB BAR TO BE 40-42" MIN 33-36" AFF.
3. URINALS SHALL BE STALL-TYPE OR WALL-HUNG WITH AN ELONGATED RIM AT A MAXIMUM OF 17" AFF.

STANDARD STALL (END OF ROW) & URINAL REQUIREMENTS

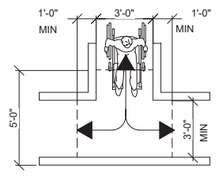

T-SHAPED TURNING SPACE

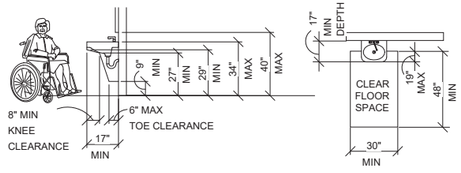

NOTES:

1. PLACE LAVATORY BOWL AS FAR FORWARD AS POSSIBLE AND CUT OUT PIPE PROTECTION PANEL AROUND BOWL.

CLEARANCE REQUIREMENTS LAVATORY

A3 ACCESSIBILITY HEIGHTS AND CLEARANCES

SCALE 1/4" = 1'-0"

GENERAL SHEET NOTES

A. SIGNAGE SHALL BE MOUNTED AT THE LATCH SIDE OF THE DOOR. WHERE THERE IS INSUFFICIENT SPACE ON THE LATCH SIDE, LOCATE THE SIGN ON THE NEAREST ADJACENT WALL.

B. ACCESSIBILITY STANDARDS ARE PER ARCHITECTURAL BARRIERS ACT (ABA)

C. THE MOUNTING HEIGHTS AND DEVICES SHOWN ON THIS DRAWING ARE INTENDED TO ILLUSTRATE THE FINISH ELEVATION AND LOCATION OF DEVICES, FIXTURES AND ACCESSORIES. THE CONTRACTOR IS TO COORDINATE THE LOCATION OF CONDUIT AND BACK BOX ROUGH-IN TO ALIGN THE FINISH ELEVATIONS AND LOCATIONS OF DEVICES AS SHOWN.

D. NOT ALL CONDITIONS AND DEVICES MAY BE SHOWN. REFER TO THE ELECTRICAL, TELECOMMUNICATIONS, LIFE SAFETY AND MECHANICAL DRAWINGS FOR ADDITIONAL DEVICE DETAILS.

E. CONTRACTOR TO PROVIDE BLOCKING WITHIN WALL ASSEMBLIES FOR WALL MOUNTED DEVICES.

F. REFER TO INTERIOR DRAWINGS FOR ACCESSIBILITY SIGNAGE.

GRAPHIC SCALE(S)

0 2' 4' 8' 12'

SCALE: 1/4" = 1'-0"

0 1' 2' 4' 6'

SCALE: 1/2" = 1'-0"

LICENSED ARCHITECT
DONALD WINSTEAD
No. ARC.2520/029
05-08-26
STATE OF OHIO

MARK	DESCRIPTION	DATE

DESIGNED BY: R. SMITH
DRAWN BY: E. NEWSUM
CHECKED BY: D. WINSTEAD
SUBMITTED BY: D. PEARSON
SIZE: ANSI D
ISSUE DATE: MAY 2026
AMG PROJECT NO.: PBXP222050
CONTRACT NO.: FA8903-21-D-0008
TASK ORDER NO.: W50S8R23F0009

OHIO AIR NATIONAL GUARD
MANSFIELD LAHM AIR NATIONAL GUARD BASE, OH

JACOBS GOVERNMENT SERVICES
2800 MICHELSON SR, STE 500
IRVINE, CA 92812

MANSFIELD LAHM AIR NATIONAL GUARD BASE, OH
REPAIR B403 FOR CYBER
FA877006
ARCHITECTURAL ACCESSIBILITY STANDARDS

SHEET ID
A-002

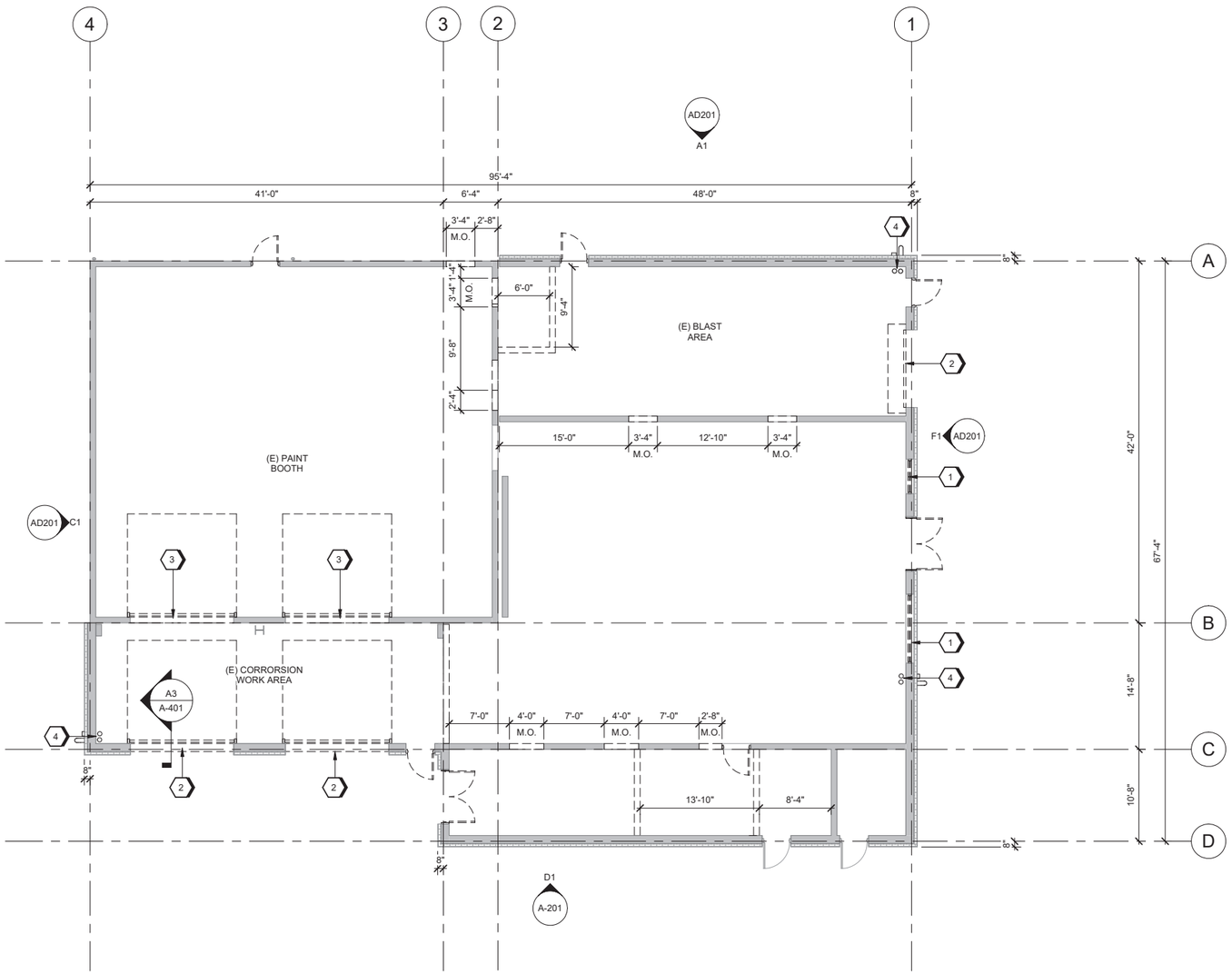

A1 OVERALL GROUND FLOOR DEMOLITION PLAN

SCALE 1/8" = 1'-0"

GENERAL SHEET NOTES

A. NOTIFY THE CONTRACTING OFFICERS REPRESENTATIVE OF ANY DISCREPANCIES BEFORE PROCEEDING WITH WORK.

B. REFER TO MECHANICAL, PLUMBING AND ELECTRICAL DRAWINGS FOR ADDITIONAL DEMOLITION INFORMATION.

C. REFER TO STRUCTURAL DRAWINGS FOR OPENINGS AT EXISTING CMU WALLS.

D. REFER TO CIVIL DRAWINGS FOR ASSOCIATED DEMOLITION SITE WORK NOT LISTED ON THE FLOOR PLANS.

E. REMOVE ANY FLOOR PENETRATIONS AND CONDUITS. REMOVE BELOW FLOOR SLAB AND INFILL WITH CONCRETE.

F. PREP EXISTING CONCRETE FLOOR SLAB FOR THE INSTALLATION OF METAL PLATE AND RAISED ACCESS FLOORING. FLOOR SLAB MUST BE FLAT.

G. REMOVE EXISTING PAINT ON INTERIOR CMU WALLS. PREP WALLS FOR NEW FINISHES.

H. REMOVE EXISTING PAINT ON EXTERIOR CMU WALLS. PREP WALLS FOR PAINTING.

I. NEW DOOR OPENINGS ARE 12 INCHES ABOVE CONCRETE FLOOR TO ACCOUNT FOR NEW RAISED ACCESS FLOORING

(#) DEMOLITION KEYNOTES

1. REMOVE EXISTING WINDOW ASSEMBLY
2. SALVAGE EXISTING COILING DOOR ASSEMBLY. RETURN TO BASE
3. REMOVE EXISTING OVERHEAD DOORS AND GUIDES
4. REMOVE EXISTING PVC ROOF AND OVERFLOW DRAIN PIPING. REFER TO PLUMBING DRAWINGS.

LEGEND

REMOVE EXISTING CMU WALL

REMOVE EXISTING DOOR AND FRAME

(E) WALL TO REMAIN

(E) DOOR, DOOR FRAME, AND HARDWARE TO BE REMAIN

GRAPHIC SCALE(S)

8 6 4 2 0 8 16

SCALE: 1/8"=1'-0"

PLAN NORTH

LICENSED ARCHITECT
DONALD WINSTEAD
No. ARC.2020029
05-08-26
STATE OF OHIO

MARK	DESCRIPTION	DATE

DESIGNED BY: R. SMITH
DRAWN BY: E. NEWSUM
CHECKED BY: D. WINSTEAD
SUBMITTED BY: D. PEARSON
SIZE: ANSI D
ISSUE DATE: MAY 2026
AMG PROJECT NO.: PBXP222050
CONTRACT NO.: FA8903-21-D-0008
TASK ORDER NO.: W50S8R23F0009

OHIO AIR NATIONAL GUARD
MANSFIELD LAHM AIR NATIONAL GUARD BASE, OH

JACOBS GOVERNMENT SERVICES
2600 MICHELSON SR. STE 500
IRVINE, CA 92812

MANSFIELD LAHM AIR NATIONAL GUARD BASE, OH
REPAIR B403 FOR CYBER
FA877006
ARCHITECTURAL DEMOLITION FLOOR PLAN

SHEET ID
AD101

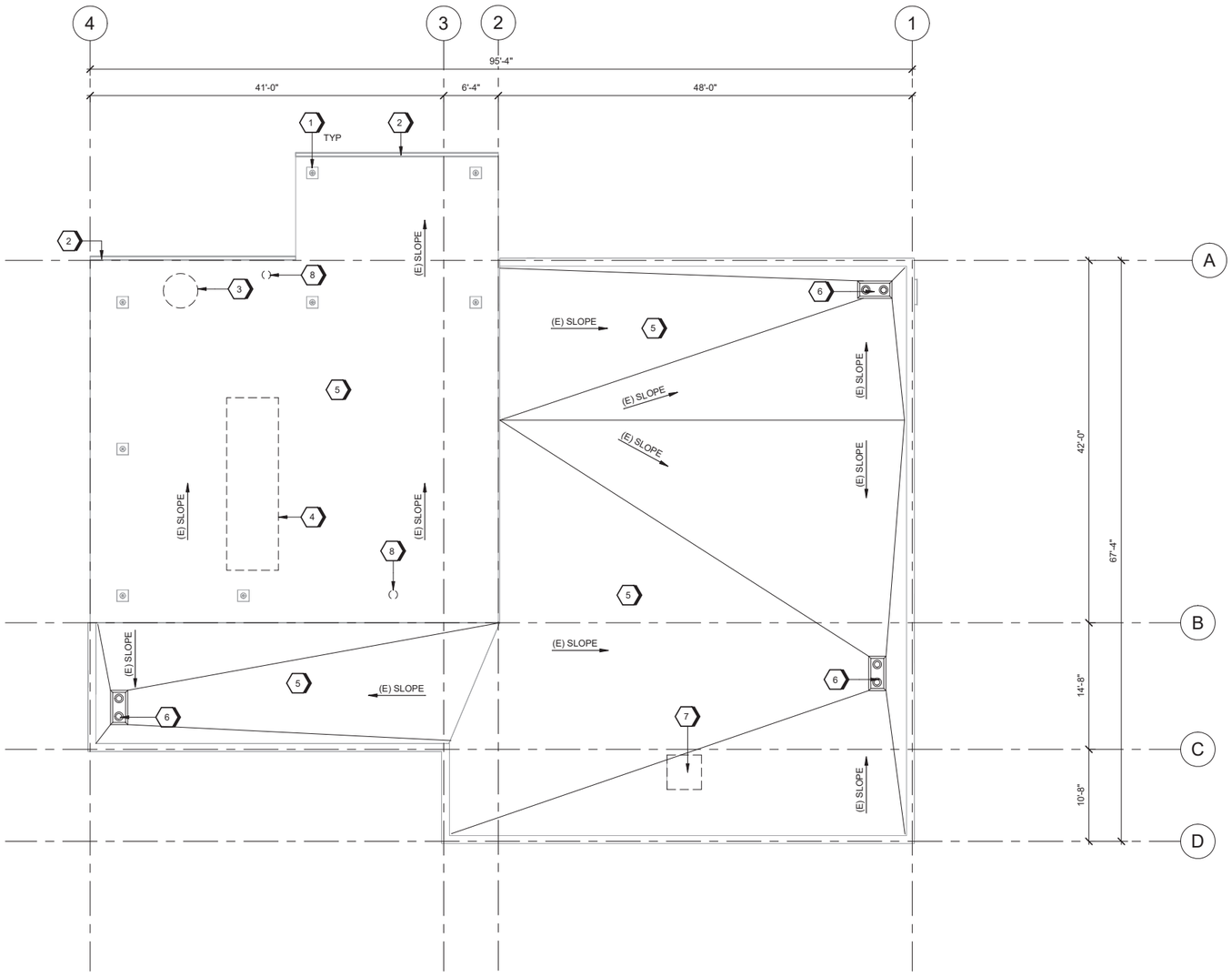

A1 DEMOLITION ROOF PLAN
SCALE 1/8" = 1'-0"

GENERAL SHEET NOTES

#DEMOLITION KEYNOTES

1. EXISTING ROOF ANCHOR AND LIFE LINE, PROTECT IN PLACE
2. EXISTING GUTTER AND DOWNSPOUT ASSEMBLY TO REMAIN
3. EXISTING METAL CAPPED OPENING TO REMAIN
4. EXISTING MECHANICAL EQUIPMENT TO BE REMOVED. PROTECT EXISTING CURB
5. EXISTING SINGLE-PLY ROOF SYSTEM WITH EXISTING CRICKET SLOPES
6. EXISTING ROOF DRAIN AND OVERFLOW ASSEMBLY
7. EXISTING ROOF HATCH TO BE REMOVED
8. REMOVE TOP PORTION OF VENT CAP AND ANY PIPING THAT IS LOCATED BELOW THE ROOF DECK. PROTECT EXISTING ABOVE PIPE

GRAPHIC SCALE(S)

PLAN NORTH

0 4' 8' 16' 24'

SCALE: 1/8" = 1'-0"

LICENSED ARCHITECT
DONALD WINSTEAD
No. ARC.2020029
05-08-26
STATE OF OHIO

MARK	DESCRIPTION	DATE

DESIGNED BY: B. SMITH
DRAWN BY: E. NEWSUM
CHECKED BY: D. WINSTEAD
SUBMITTED BY: D. PEARSON
SIZE: ANSI D

ISSUE DATE: MAY 2026
AMG PROJECT NO.: PBXP222050
CONTRACT NO.: FA8903-21-D-0008
TASK ORDER NO.: W50S8R23F0009

OHIO AIR NATIONAL GUARD
MANSFIELD LAHM AIR NATIONAL GUARD BASE, OH

JACOBS GOVERNMENT SERVICES
2600 MICHELSON SR, STE 500
IRVINE, CA 92612

MANSFIELD LAHM AIR NATIONAL GUARD BASE, OH
REPAIR B403 FOR CYBER
FA877006
ARCHITECTURAL DEMOLITION ROOF PLAN

SHEET ID
AD102

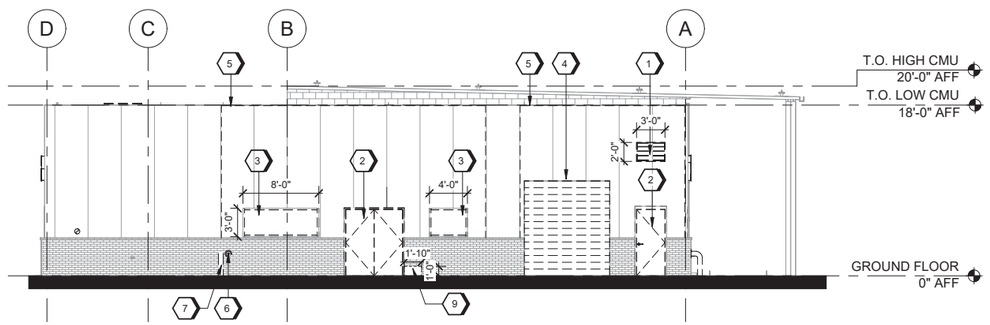

F1 EAST DEMOLITION ELEVATION
SCALE 1/8" = 1'-0"

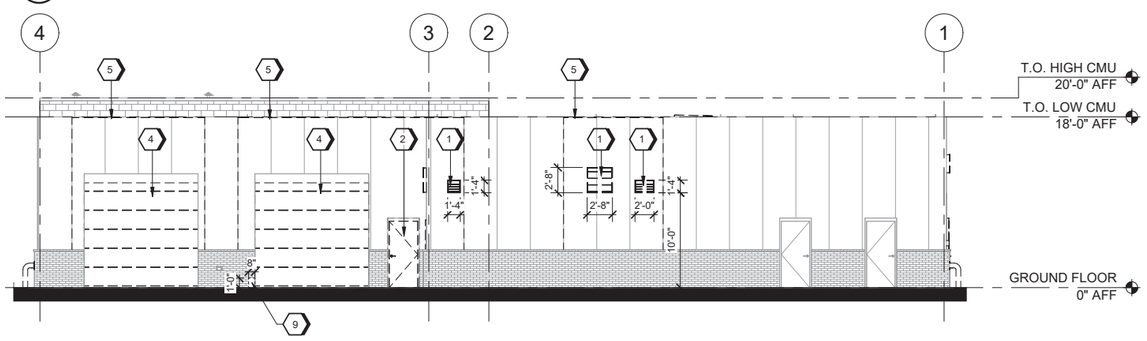

D1 SOUTH DEMOLITION ELEVATION
SCALE 1/8" = 1'-0"

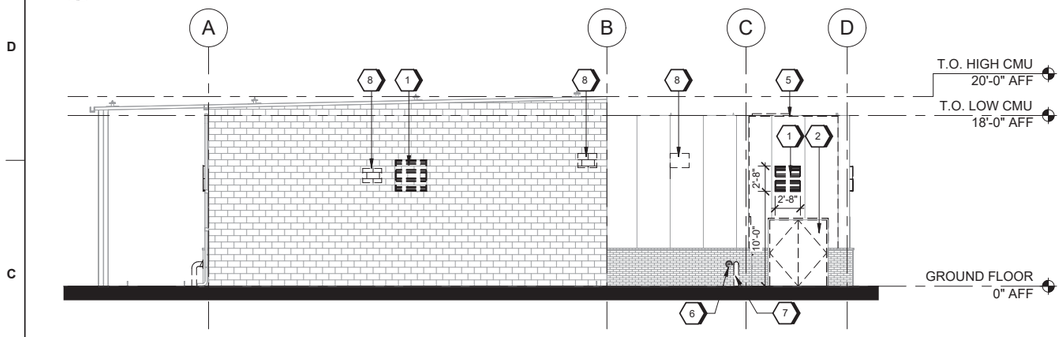

C1 WEST DEMOLITION ELEVATION
SCALE 1/8" = 1'-0"

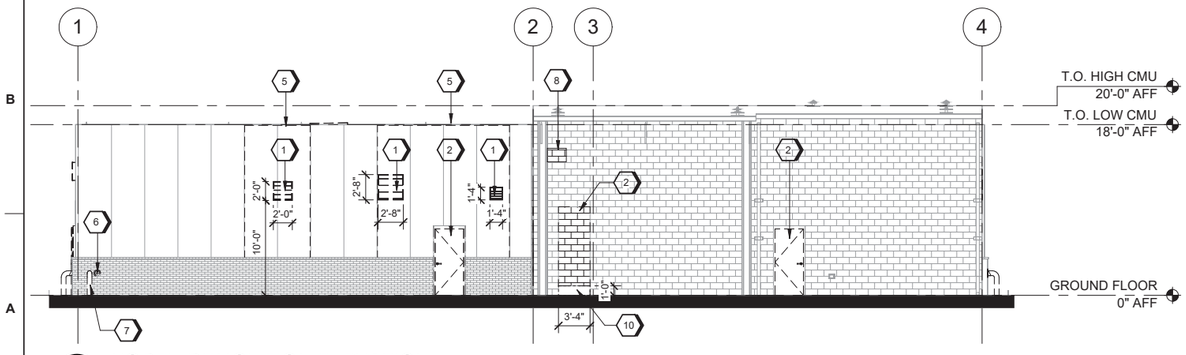

A1 NORTH DEMOLITION ELEVATION
SCALE 1/8" = 1'-0"

GENERAL SHEET NOTES

A. NOTIFY THE CONTRACTING OFFICERS REPRESENTATIVE OF ANY DISCREPANCIES BEFORE PROCEEDING WITH WORK.

B. REFER TO MECHANICAL, PLUMBING AND ELECTRICAL DRAWINGS FOR ADDITIONAL DEMOLITION INFORMATION.

C. REFER TO STRUCTURAL DRAWINGS FOR OPENINGS AT EXISTING CMU WALLS.

D. REMOVE EXISTING PAINT ON EXTERIOR CMU WALLS. PREP WALLS FOR PAINTING.

(#) DEMOLITION KEYNOTES

1. REMOVE EXISTING LOUVER ASSEMBLY
2. REMOVE EXISTING EXTERIOR DOOR ASSEMBLY
3. REMOVE EXISTING WINDOW ASSEMBLY
4. SALVAGE EXISTING COILING DOOR ASSEMBLY RETURN TO BASE
5. EXTENTS OF EXISTING INSULATED METAL PANEL TO BE REMOVED. SUPPORT FRAMING TO REMAIN FOR INSTALLATION OF NEW INSULATED METAL PANEL.
6. REMOVE EXISTING DOWNSPOUT NOZZLE AND ASSOCIATED PIPING.
7. REMOVE EXISTING THRU-WALL PIPING
8. OUTLINE OF DEMOLITION FOR NEW WALL LOUVER
9. OUTLINE OF DEMOLITION OF BRICK VENEER FOR NEW RAMP
10. OUTLINE OF DEMOLITION OF CMU FOR NEW RAMP

GRAPHIC SCALE(S)

8 6 4 2 0 8 16
SCALE: 1/8"=1'-0"

LICENSED ARCHITECT
DONALD WINSTEAD
No. ARC.2020029
05-08-26
STATE OF OHIO

MARK	DESCRIPTION	DATE

DESIGNED BY: R. SMITH
DRAWN BY: E. NEWSUM
CHECKED BY: D. WINSTEAD
SUBMITTED BY: D. PEARSON
SIZE: ANSI D

ISSUE DATE: MAY 2026
AMG PROJECT NO.: PBXP222050
CONTRACT NO.: FA8903-21-D-0008
TASK ORDER NO.: W50S8R23F0009

OHIO AIR NATIONAL GUARD
MANSFIELD LAHM AIR NATIONAL GUARD BASE, OH

JACOBS GOVERNMENT SERVICES
2600 MICHELSON SR, STE 500
IRVINE, CA 92612

MANSFIELD LAHM AIR NATIONAL GUARD BASE, OH
REPAIR B403 FOR CYBER
FA877006
ARCHITECTURAL DEMOLITION ELEVATIONS

SHEET ID
AD201

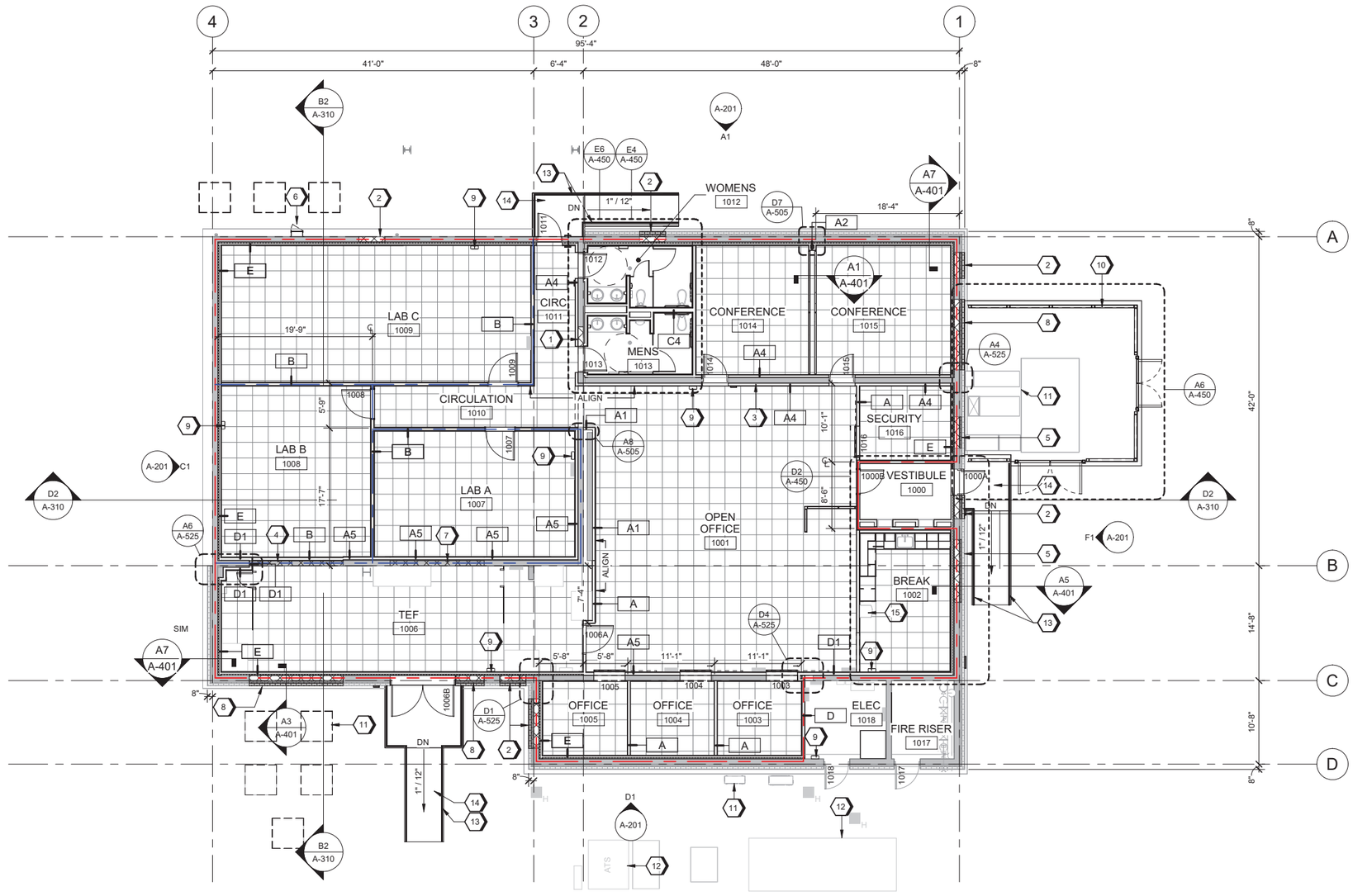

A1 GROUND FLOOR PLAN
SCALE 1/8" = 1'-0"

GENERAL SHEET NOTES

A. VERIFY EXISTING CONDITIONS AND DIMENSIONS PRIOR TO START OF CONSTRUCTION.
B. ALL DIMENSIONS SHOWN ARE TO FACE OF METAL STUDS, UNO AS CLEAR.
C. ALL STUD WALLS SHALL BE CONSTRUCTED PER PARTITION TYPES ON SHEET A-701.
D. REFER TO DETAILS A3 AND B3 ON SHEET A-504 FOR BACKING REQUIREMENTS FOR WALL SUPPORTED ELEMENTS.
E. ALL DOORS BE PLACED 4IN FROM THE CORNER OF THE ROOM TO THE DOOR OPENING UNLESS NOTED OTHERWISE. SEE SHEET A-601 FOR DOOR SCHEDULE.
F. CONCEALED BLOCKING SHALL BE PROVIDED AT ALL WALL HUNG EQUIPMENT, ACCESSORIES AND DEVICES. COORDINATE SIZE AND LOCATIONS WITH EQUIPMENT PURCHASES.
G. ALL PERIMETER JOINTS AND THROUGH PENETRATIONS THROUGH FIRE-RATED WALLS SHALL BE FIRE STOPPED.
H. ALL PERIMETER JOINTS AND THROUGH PENETRATIONS THROUGH ACOUSTICAL WALLS SHALL BE SEALED WITH ACOUSTIC SEALANT.
I. PROVIDE WATER REPELLENTS ON INTERIOR SIDE OF EXISTING CONCRETE WALL SURFACES. ENSURE WALL SURFACE IS SUITABLE FOR WATER REPELLENT APPLICATION.
J. COORDINATE SIZE OF EXTERIOR EQUIPEMENT AND SIZE OF REQURIED PAD. DIMENSIONS PROVIDED ON OTHER DRAWINGS ARE FOR REFERNCE ONLY.

SHEET KEYNOTES

1. MASONRY INFILL AT EXISTING DOOR OPENING
2. MASONRY INFILL AT EXISTING DOOR OPENING, MATCH ADJACENT EXISTING EXTERIOR FINISH AND ASSEMBLY
3. LED VIDEO WALL
4. GYPSUM BOARD AND METAL STUD INFILL AT EXISTING OPENING
5. MASONRY INFILL AT EXISTING WINDOW, MATCH ADJACENT EXISTING EXTERIOR FINISH AND ASSEMBLY
6. ROOF ACCESS LADDER WITH SECURITY LADDER GUARD AT FRONTSIDE OF LADDER
7. MASONRY INFILL AT EXISTING OVERHEAD DOOR OPENING
8. MASONRY INFILL AT EXISTING OVERHEAD DOOR OPENING, MATCH ADJACENT EXISTING EXTERIOR FINISH AND ASSEMBLY
9. SURFACE MOUNTED FIRE EXTINGUISHER CABINET
10. MECHANICAL SCREEN - 3/4" DEPTH - HORIZONTAL PROFILE, PERFORATED ALUMINUM PANEL, PAINTED TO MATCH EXISTING BUILDING
11. MECHANICAL EQUIPMENT, REFER TO MECHANICAL
12. ELECTRICAL EQUIPMENT, REFER TO ELECTRICAL
13. PAINTED METAL GUARD WITH HANDRAIL
14. SLOPED CONCRETE RAMP AND LANDING
15. DRINKING FOUNTAIN WITH WATER BOTTLE FILLER

LEGEND

(E) WALL TO REMAIN

(E) DOOR, DOOR FRAME, AND HARDWARE TO BE REMAIN

SECURE AREA

CONTROLLED AREA

12-INCH HIGH RAISED ACCESS FLOORING

GRAPHIC SCALE(S)

8 6 4 2 0 8 16
SCALE: 1/8"=1'-0"

PLAN NORTH

LICENSED ARCHITECT
DONALD WINSTEAD
No. ARC.2020029
05-08-26
STATE OF OHIO

MARK	DESCRIPTION	DATE

DESIGNED BY: R. SMITH
DRAWN BY: E. NEWSUM
CHECKED BY: D. WINSTEAD
SUBMITTED BY: D. PEARSON
SIZE: ANSI D
ISSUE DATE: MAY 2026
AMG PROJECT NO.: P8XP222050
CONTRACT NO.: FA8903-21-D-0008
TASK ORDER NO.: W50S8R23F0009

OHIO AIR NATIONAL GUARD
MANSFIELD LAHM AIR NATIONAL GUARD BASE, OH

JACOBS GOVERNMENT SERVICES
2600 MICHELSON SR, STE 500
IRVINE, CA 92612

MANSFIELD LAHM AIR NATIONAL GUARD BASE, OH
REPAIR B403 FOR CYBER
FA877006
ARCHITECTURAL FLOOR PLAN

SHEET ID
A-101

TYPE B-3 FINAL

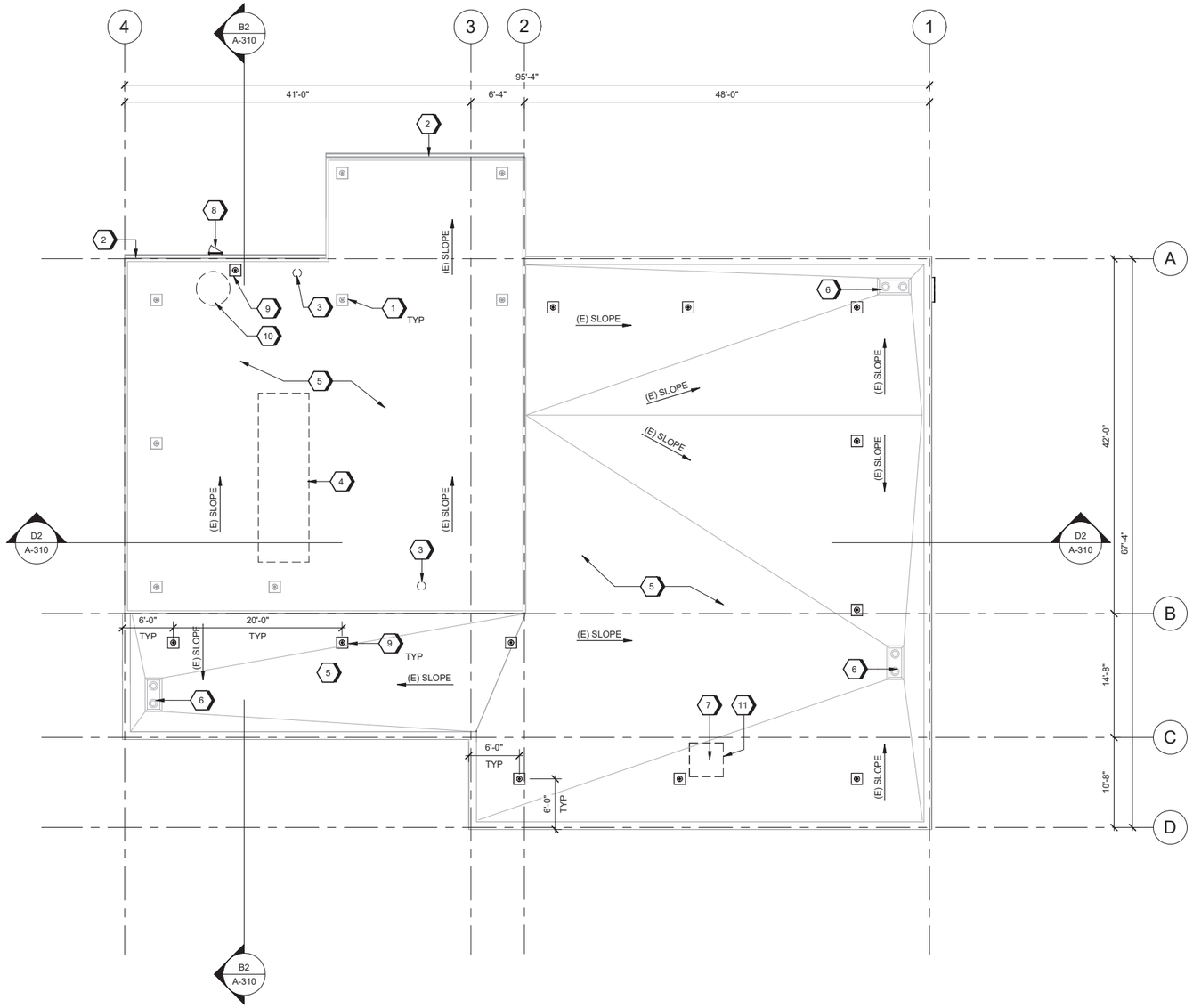

A1 ROOF PLAN
SCALE 1/8" = 1'-0"

GENERAL SHEET NOTES

A. VERIFY EXISTING CONDITIONS AND DIMENSIONS PRIOR TO START OF CONSTRUCTION.

B. EXISTING ROOFING SYSTEM AT LOW ROOF CONSISTS OF CARLISLE SYNTEC 135 MIL FLEECEBACK PVC FRS MEMBRANE OVER 1/2" USG SECUROCK COVERBOARD OVER CARLISLE SYNTEC 3 1/2" AND 2 1/2" MINIMUM TAPERED INSULABASE 20 PSI POLYISOCYANURATE INSULATION OVER 6 MIL POLYETHELENE VAPOR BARRIER.

C. EXISTING ROOFING SYSTEM AT HIGH ROOF CONSISTS OF CARLISLE SYNTEC 135 MIL FLEECEBACK PVC FRS MEMBRANE OVER 1/2" USG SECUROCK COVERBOARD OVER 2 LAYERS OF CARLISLE SYNTEC 3 1/2" INSULABASE 20 PSI POLYISOCYANURATE INSULATION OVER 6 MIL POLYETHELENE VAPOR BARRIER.

D. CONTRACTOR TO NOTIFY OWNER WHEN ROOFING IS COMPLETE FOR ADDITION TO THE EXISTING WARRANTY. WARRANTY DOCUMENT NUMBER TO BE PROVIDED BY THE BASE.

E. SALVAGE AND REUSE EXISTING LIGHTNING PROTECTION TERMINALS AND REINSTALL MOUNTED TO THE OUTSIDE WALL.

F. ENSURE THAT THE EXISTING ROOFING WARRANTY REMAINS FOR ALL NEW ROOF PENETRATIONS AT THE EXISTING ROOFING ASSEMBLY.

#SHEET KEYNOTES

1. EXISTING ROOF ANCHOR AND LIFE LINE, PROTECT IN PLACE
2. EXISTING GUTTER AND DOWNSPOUT ASSEMBLY TO REMAIN
3. INFILL EXISTING PIPE WITH MINERAL WOOL TYPE INSULATION. PROVIDE METAL CAP ONTOP OF PIPE, SECURE AND SEAL AROUND METAL CAP
4. SEE STRUCTURAL (F1/S-520) FOR INFILL OF EXISTING METAL DECK AT OPENING. PROVIDE SHEET METAL COVER OVER 3/4" FIRE TREATED PLYWOOD OVER EXISTING CURB AND OPENING. PROVIDE SEMI RIGID INSULAT BOARD INSIDE OPENING. COVER TO HAVE A SIGN PAINTED OR STENCILED WITH LEGIBLE LETTERS NOT LESS THAN ONE INCH HIGH, STATING: "OPENING - DO NOT REMOVE"
5. EXISTING SINGLE-PLY ROOF SYSTEM WITH EXISTING CRICKET SLOPES
6. EXISTING ROOF DRAIN AND OVERFLOW ASSEMBLY
7. ROOFING ASSEMBLY IN-FILL, SEE GENERAL NOTES FOR ROOF MAKE-UP
8. ROOF ACCESS LADDER WITH SECURITY LADDER GUARD AT FRONTSIDE OF LADDER
9. ROOF TIE-OFF ANCHOR AND LIFE LINE TO BE ATTACHED TO THE EXISTING BUILDING STRUCTURE. REMOVE PORTION OF ROOF REQUIRED FOR INSTALLATION. PATCH AND REROOF AT TIE OFF ANCHORS TO MATCH EXISTING ROOFING ASSEMBLY. SEE DETAIL A1/A-503
10. EXISTING METAL CAPPED OPENING TO REMAIN
11. SEE STRUCTURAL (F1/S-520) FOR INFILL OF EXISTING METAL DECK AT OPENING.

GRAPHIC SCALE(S)

8 6 4 2 0 8 16
SCALE: 1/8"=1'-0"

PLAN NORTH

LICENSED ARCHITECT
DONALD WINSTEAD
No. ARC.2020029
05-08-26
STATE OF OHIO

MARK	DESCRIPTION	DATE

DESIGNED BY: B. SMITH
DRAWN BY: E. NEWSUM
CHECKED BY: D. WINSTEAD
SUBMITTED BY: D. PEARSON
SIZE: ANSI D

ISSUE DATE: MAY 2026
AMG PROJECT NO.: PBXP222050
CONTRACT NO.: FA8903-21-D-0008
TASK ORDER NO.: W50S8R23F0009

OHIO AIR NATIONAL GUARD
MANSFIELD LAHM AIR NATIONAL GUARD BASE, OH

JACOBS GOVERNMENT SERVICES
2600 MICHELSON SR. STE 500
IRVINE, CA 92812

MANSFIELD LAHM AIR NATIONAL GUARD BASE, OH
REPAIR B403 FOR CYBER
FA877006
ARCHITECTURAL ROOF PLAN

SHEET ID
A-102

TYPE B-3 FINAL

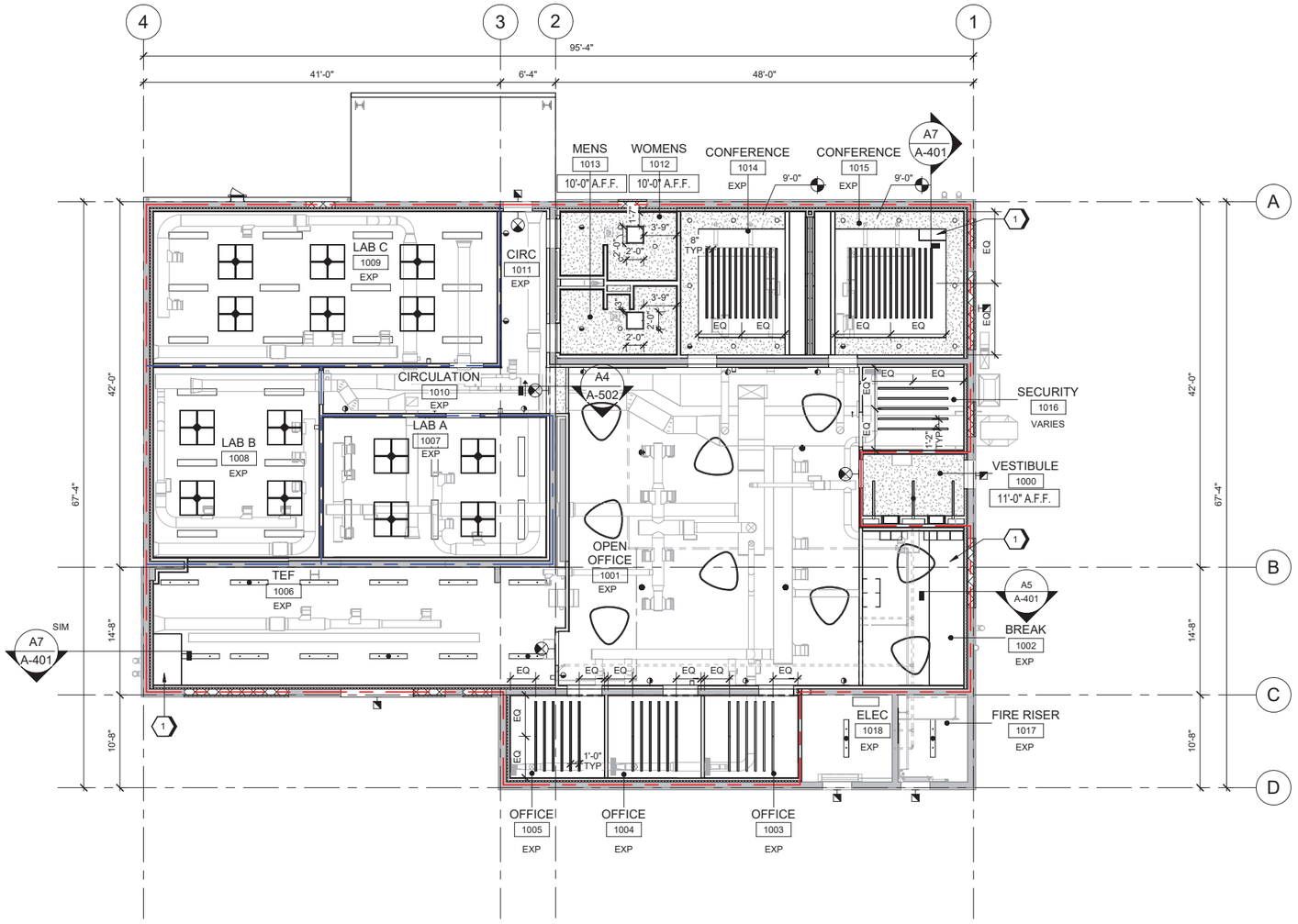

A1 REFLECTED CEILING PLAN

SCALE 1/8" = 1'-0"

GENERAL SHEET NOTES

A. REFERENCE PLUMBING, MECHANICAL AND ELECTRICAL DRAWINGS FOR ALL VENTS, GRILLES, REGISTERS, DUCTS, LIGHT, DETECTORS, ETC AND COORDINATE SAME AS REQUIRED.

B. CONTRACTOR SHALL COORDINATE ALL PLUMBING, MECHANICAL, AND ELECTRICAL WORK WITH CEILING HEIGHTS AND ARCHITECTURAL WORK. WHERE CEILINGS OCCURS, COORDINATE FINAL LOCATIONS WITH ARCHITECT.

C. REFERENCE ROOM FINISH SCHEDULE FOR CEILING MATERIAL AND FINISHES.

D. ALL CEILING MOUNTED OR RECESSED ITEMS SUCH AS HEADS, GRILLES, LIGHTS, ETC CENTERED IN THE LAY-IN PANELS. WHERE GYPSUM BOARD CEILINGS OCCUR, INSTALL IN A CONSISTENT PATTERN.

E. FOR TYPICAL LAYOUT, SPLAY AND FIXTURE WIRING, HANGER WIRE AND COMPRESSION STRUT, SEE DETAILS ON DRAWING A-515.

F. ALL CEILING GRIDS SHALL BE CENTERED WITHIN EACH SPACE, UNO.

G. ALL EXPOSED STRUCTURES AND UTILITIES VISIBLE FROM ANY POINT IN THE USABLE SPACE SHALL BE PAINTED (OTS-A), UNO.

H. FINISH AND PAINT (GYP-1) EXPOSED GYPSUM BOARD AT UNDERSIDE OF ROOF STRUCTURE.

I. CONTROL JOINTS IN INTERIOR CEILINGS WITHOUT PERIMETER RELIEF SHALL BE INSTALLED SO THAT LINEAR DIMENSIONS BETWEEN CONTROL JOINTS DO NOT EXCEED 30 FT AND TOTAL AREA BETWEEN CONTROL JOINTS DOES NOT EXCEED 900 SQ FT.

J. RF SHEILD ENCLOSURE AT UNDERSIDE OF EXISTING JOIST TO FOLLOW STRUCTURE.

K. PROVIDE CEILING ACCESS PANELS PER SPECIFICATIONS, UNO.

L. ALL SUSPENDED ITEMS INSTALLED BELOW THE STC AND RF BARRIER AT THE UNDERSIDE OF ROOF STRUCTURE MUST BE INSTALLED ON A STRUCTURAL CEILING GRID SUPPORT ATTACHED TO STRUCTURAL STEEL.

SHEET KEYNOTES

1. RF SHIELD ENCLOSURE HORIZONTAL UTILITY CHASE

LEGEND

- GYPSUM BOARD CEILING AS SCHEDULED
- LIGHT FIXTURE; REFER TO ELECTRICAL
- EXIT LIGHT FIXTURE; REFER TO ELECTRICAL
- SUPPLY AIR DIFFUSERS; REFER TO MECHANICAL
- EXHAUST GRILL; REFER TO MECHANICAL
- SUSPENDED ACOUSTICAL CEILING BAFFLES WITH INTEGRAL LED LIGHTING. 8'-6" A.F.F UNLESS NOTED OTHERWISE
- ACOUSTICAL CEILING CLOUD (ACC-1); REFER TO INTERIORS
- IN-WALL HORIZONTAL AND VERTICAL LIGHTING. VERTICAL TO HORIZONTAL TRANSITION MUST BE SEAMLESS
- SECURE AREA
- CONTROLLED AREA

GRAPHIC SCALE(S)

0 4' 8' 16' 24'

SCALE: 1/8" = 1'-0"

PLAN NORTH

LICENSED ARCHITECT
DONALD WINSTEAD
No. ARC.2020029
05-08-26
STATE OF OHIO

MARK	DESCRIPTION	DATE

DESIGNED BY: R. SMITH
DRAWN BY: E. NEWSUM
CHECKED BY: D. WINSTEAD
SUBMITTED BY: D. PEARSON
SIZE: ANSI D
ISSUE DATE: MAY 2026
ANG PROJECT NO.: PBXP222050
CONTRACT NO.: FA8903-21-D-0008
TASK ORDER NO.: W50JSR23F0009

OHIO AIR NATIONAL GUARD
MANSFIELD LAHM AIR NATIONAL GUARD BASE, OH

JACOBS GOVERNMENT SERVICES
2600 MICHELSON SR. STE 500
IRVINE, CA 92612

MANSFIELD LAHM AIR NATIONAL GUARD BASE, OH
REPAIR B403 FOR CYBER
FA877006
ARCHITECTURAL REFLECTED CEILING PLAN

SHEET ID
A-111

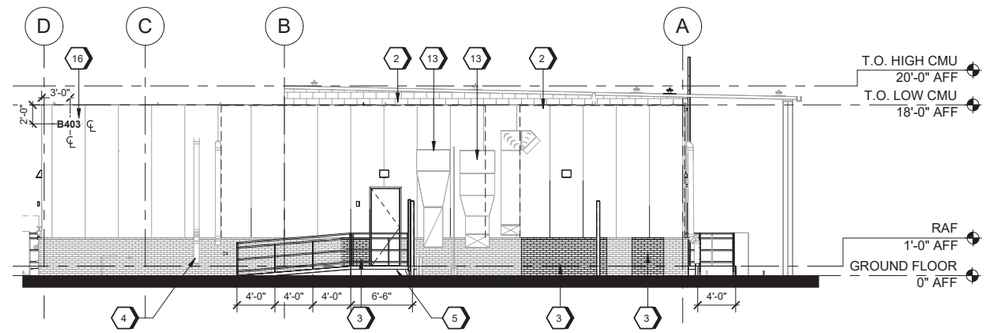

F1 EAST ELEVATION
SCALE 1/8" = 1'-0"

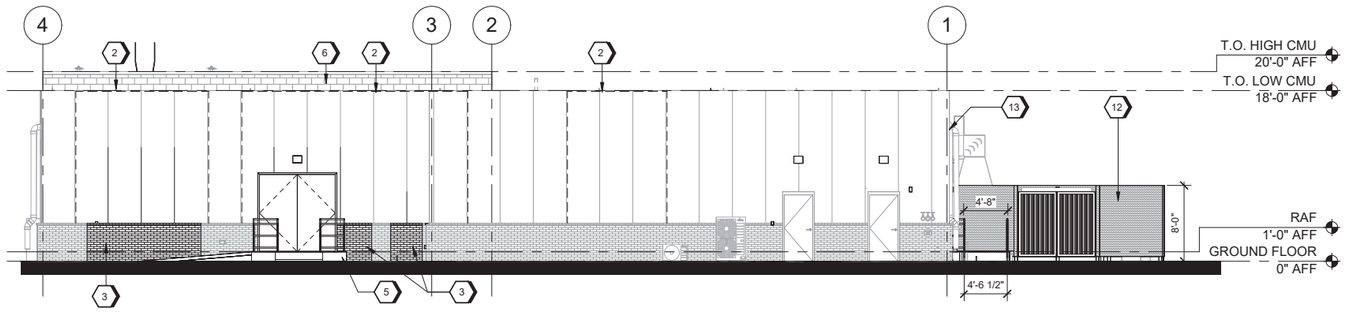

D1 SOUTH ELEVATION
SCALE 1/8" = 1'-0"

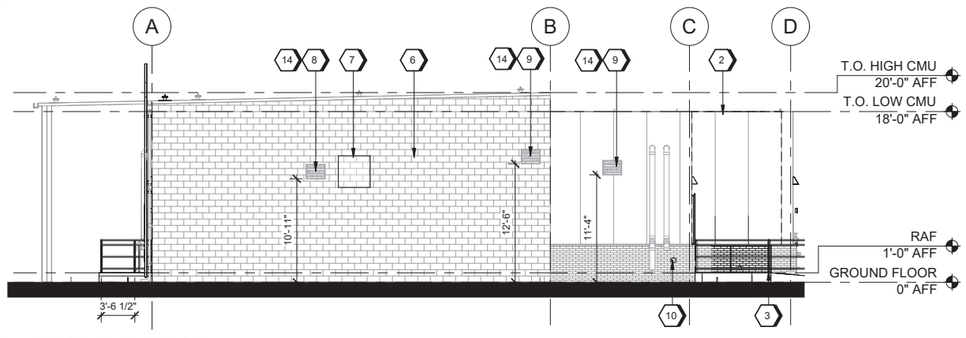

C1 WEST ELEVATION
SCALE 1/8" = 1'-0"

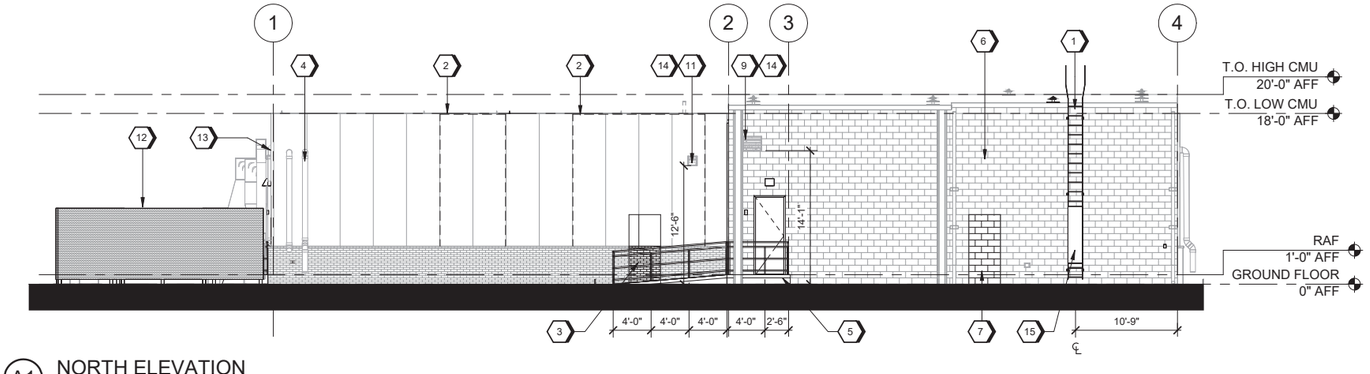

A1 NORTH ELEVATION
SCALE 1/8" = 1'-0"

GENERAL SHEET NOTES

SHEET KEYNOTES

1. ROOF ACCESS LADDER WITH SECURITY LADDER GUARD AT FRONTSIDE OF LADDER
2. NEW INSULATED METAL PANEL INFILL.
3. NEW BRICK VENEER INFILL. BRICK MUST MATCH EXISTING SIZE AND COLOR
4. REROUTED DOWNSPOUT AND OVERFLOW PIPING. REFER TO PLUMBING
5. CONCRETE RAMP, REFER TO CIVIL.
6. PAINT EXISTING CMU WALL
7. NEW CMU WALL INFILL.
8. 24" X 24" FACTORY-FINISHED RAIN-RESISTANT LOUVER WITH INSECT SCREEN, REFER TO LOUVER SCHEDULE
9. 24" X 18" FACTORY-FINISHED RAIN-RESISTANT LOUVER WITH INSECT SCREEN, REFER TO LOUVER SCHEDULE
10. INFILL EXISTING OPENING SOLID WITH GROUT. PROVIDE NEW STAINLESS STEEL ROUND FACE OF WALL COVER.
11. 12" X 12" FACTORY-FINISHED RAIN-RESISTANT LOUVER WITH INSECT SCREEN, REFER TO LOUVER SCHEDULE
12. MECHANICAL SCREEN - 3/4" DEPTH - HORIZONTAL PROFILE, PERFORATED ALUMINUM PANEL, PAINTED TO MATCH EXISTING BUILDING
13. PROVIDE WAVEGUIDES AT DUCT PENETRATIONS. REFER TO MECHANICAL
14. PROVIDE WAVEGUIDES AT LOUVERS. REFER TO MECHANICAL
15. GALVANIZED STEEL LADDER SECURITY GUARD DOOR. PROVIDE LADDER GUARD DOOR WITH HINGES, HASP AND PADLOCK CAPABILITIES
16. EXTERIOR BUILDING SIGNAGE. REFER TO INTERIOR F1/IG601

GRAPHIC SCALE(S)

8 6 4 2 0 8 16
SCALE: 1/8"=1'-0"

LICENSED ARCHITECT
DONALD WINSTEAD
No. ARC.2020029
05-08-26
STATE OF OHIO

MARK	DESCRIPTION	DATE

ISSUE DATE: MAY 2026
AMG PROJECT NO.: PBXP222050
CONTRACT NO.: FA8903-21-D-0008
TASK ORDER NO.: W50S8R23F0009

DESIGNED BY: R. SMITH
DRAWN BY: E. NEWSUM
CHECKED BY: D. WINSTEAD
SUBMITTED BY: D. PEARSON
SIZE: ANSI D

OHIO AIR NATIONAL GUARD
MANSFIELD LAHM AIR NATIONAL GUARD BASE, OH

JACOBS GOVERNMENT SERVICES
2600 MICHELSON SR. STE 500
IRVINE, CA 92612

MANSFIELD LAHM AIR NATIONAL GUARD BASE, OH
REPAIR B403 FOR CYBER
FA877006
ARCHITECTURAL BUILDING ELEVATIONS

SHEET ID
A-201

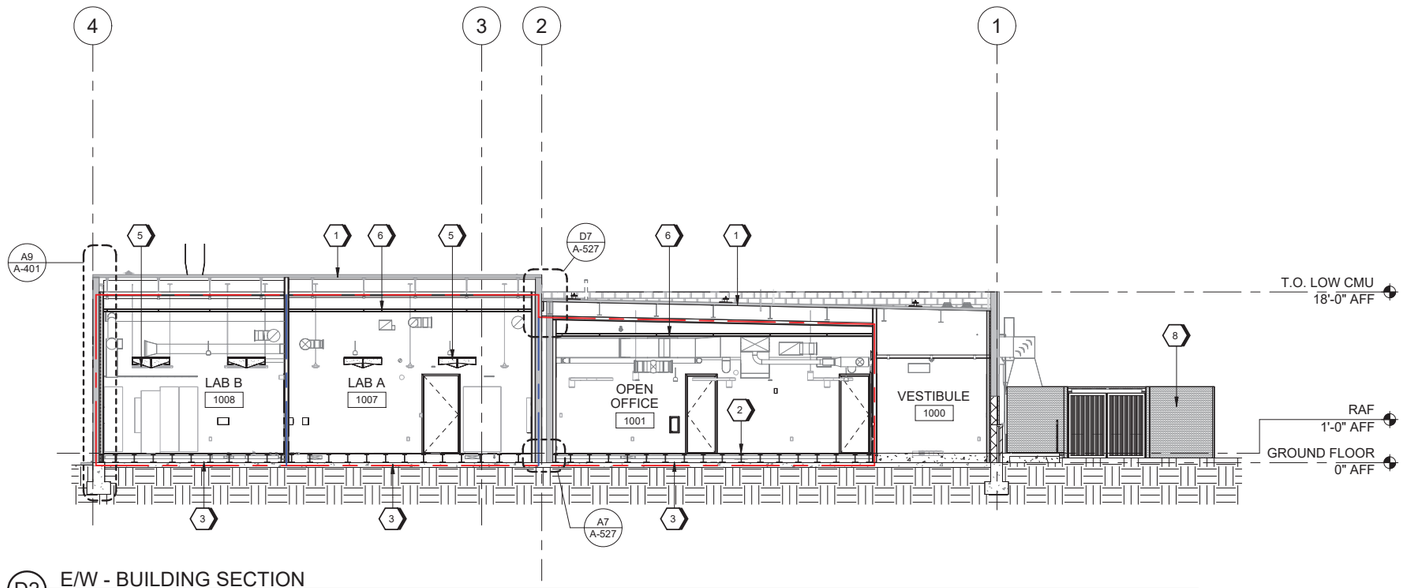

D2 E/W - BUILDING SECTION
SCALE 1/8" = 1'-0"

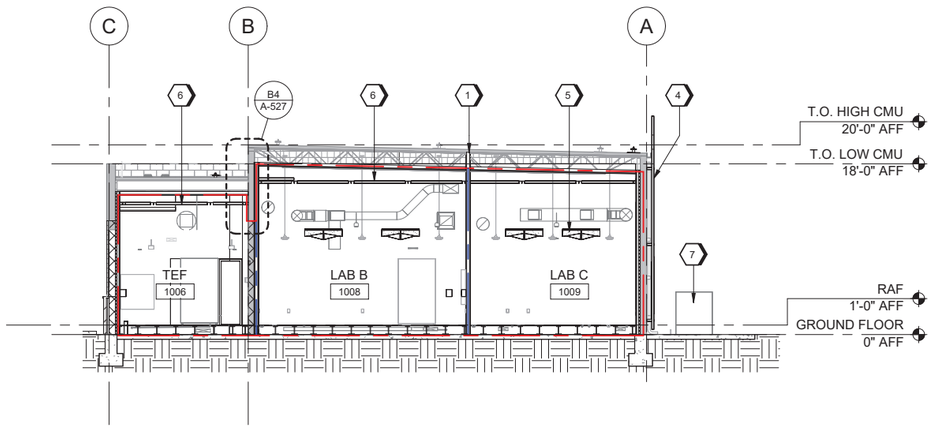

B2 N/S - BUILDING SECTION
SCALE 1/8" = 1'-0"

GENERAL SHEET NOTES

A. REFERENCE PLUMBING, MECHANICAL AND ELECTRICAL DRAWINGS FOR ALL VENTS, GRILLES, REGISTERS, DUCTS, LIGHT, DETECTORS, ETC AND COORDINATE SAME AS REQUIRED.

B. ALL SUSPENDED ITEMS INSTALLED BELOW THE STC AND RF BARRIER AT THE UNDERSIDE OF ROOF STRUCTURE MUST BE INSTALLED ON A STRUCTURAL CEILING GRID SUPPORT ATTACHED TO STRUCTURAL STEEL.

SHEET KEYNOTES

1. EXISTING SINGLE-PLY MEMBRANE ROOF SYSTEM
2. 12-INCH HIGH RAISED ACCESS FLOORING
3. 26 GAUGE SHEET METAL SHIELDING AT EXISTING FLOOR SLAB BELOW THE RAISED ASSESS FLOORING, TYPICAL
4. ROOF ACCESS LADDER WITH SECURITY LADDER GUARD AT FRONTSIDE OF LADDER
5. ACOUSTICAL CEILING CLOUD (ACC-1), SEE INTERIORS
6. STRUCTURAL CEILING GRID SUPPORT GRID
7. MECHANICAL EQUIPMENT, REFER TO MECHANICAL
8. MECHANICAL SCREEN - 3/4" DEPTH - HORIZONTAL PROFILE, PERFORATED ALUMINUM PANEL, PAINTED TO MATCH EXISTING BUILDING

LEGEND

SECURE AREA

CONTROLLED AREA

GRAPHIC SCALE(S)

8 6 4 2 0 8 16
SCALE: 1/8"=1'-0"

LICENSED ARCHITECT
DONALD WINSTEAD
No. ARC.2020029
05-08-26
STATE OF OHIO

MARK	DESCRIPTION	DATE

DESIGNED BY: R. SMITH
DRAWN BY: E. NEWSUM
CHECKED BY: D. WINSTEAD
SUBMITTED BY: D. PEARSON
SIZE: ANSI D
ISSUE DATE: MAY 2026
AMG PROJECT NO.: PBXP222050
CONTRACT NO.: FA8903-21-D-0008
TASK ORDER NO.: W50S8R23F0009

OHIO AIR NATIONAL GUARD
MANSFIELD LAHM AIR NATIONAL GUARD BASE, OH

JACOBS GOVERNMENT SERVICES
2600 MICHELSON SR, STE 500
IRVINE, CA 92812

MANSFIELD LAHM AIR NATIONAL GUARD BASE, OH
REPAIR B403 FOR CYBER
FA877006
ARCHITECTURAL BUILDING SECTIONS

SHEET ID
A-310

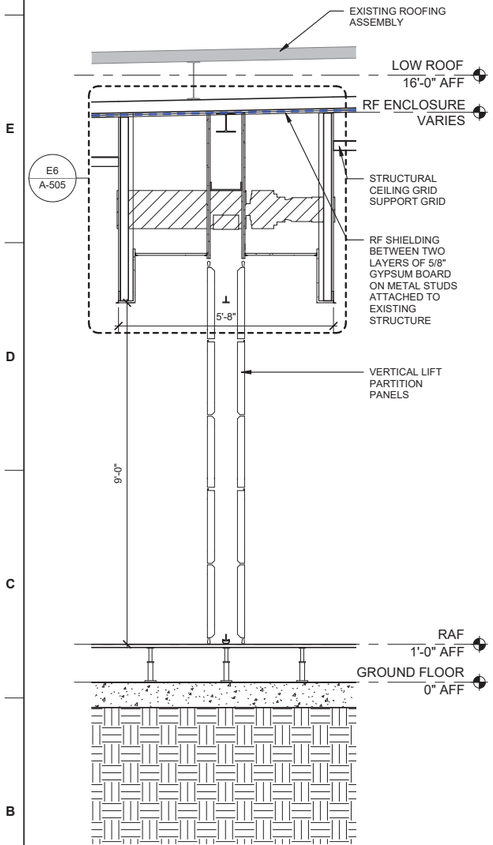

A1 VERTICAL FOLDING PARTITION
SCALE 1/2" = 1'-0"

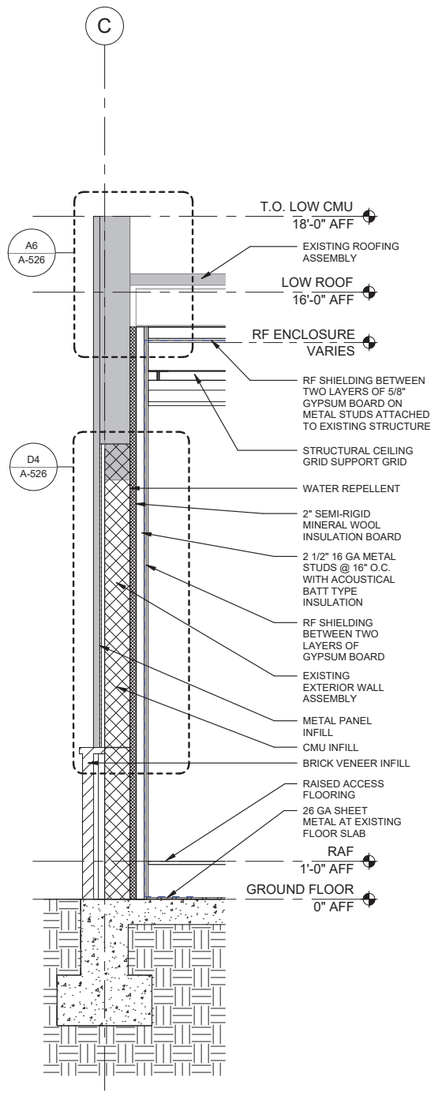

A3 WALL SECTION
SCALE 1/2" = 1'-0"

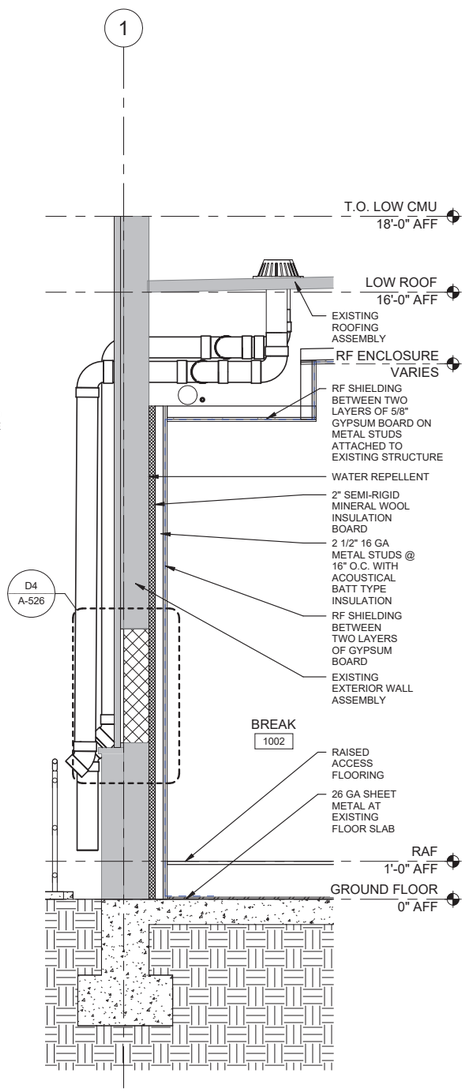

A5 WALL SECTION
SCALE 1/2" = 1'-0"

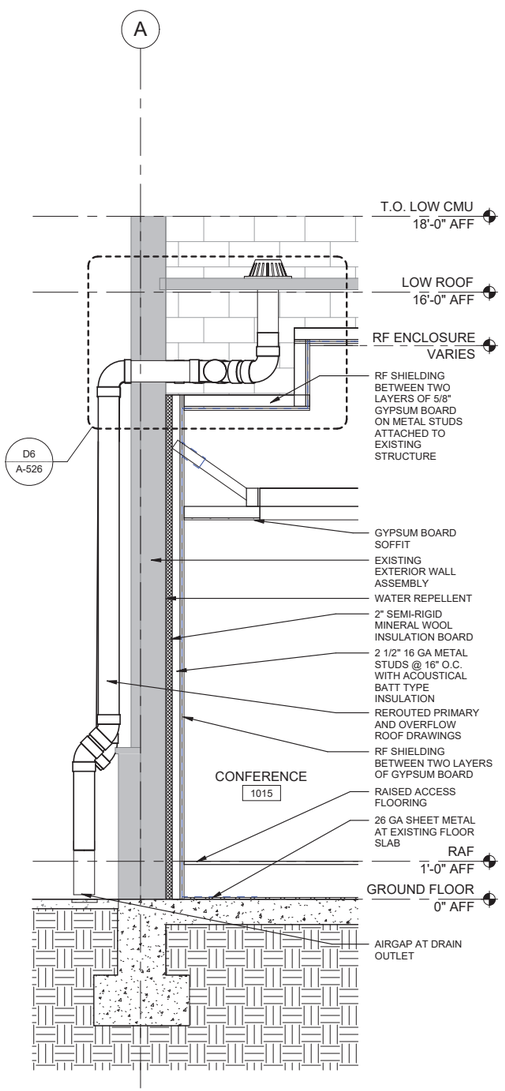

A7 WALL SECTION
SCALE 1/2" = 1'-0"

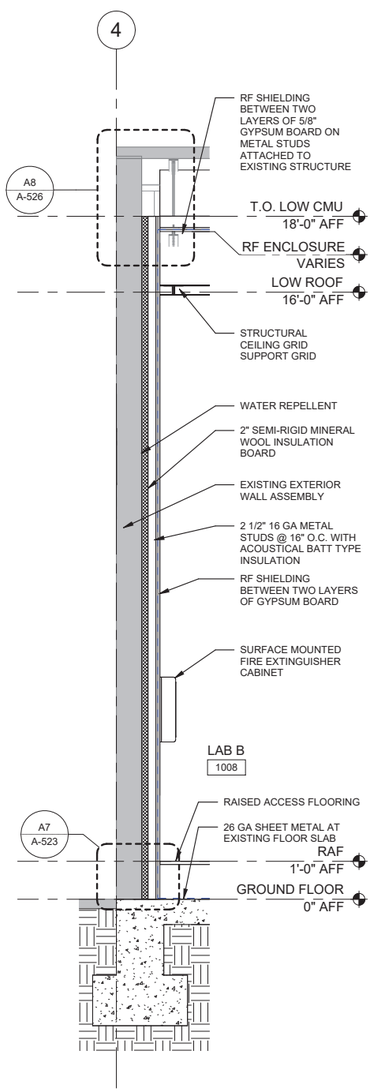

A9 WALL SECTION
SCALE 1/2" = 1'-0"

2 1 0 2 4
SCALE: 1/2"=1'-0"

LICENSED ARCHITECT
DONALD WINSTEAD
No. ARC.2020/029
05-08-26
STATE OF OHIO

MARK	DESCRIPTION	DATE

DESIGNED BY: R. SMITH	ISSUE DATE: MAY 2026
DRAWN BY: E. NEWSUM	AMG PROJECT NO.: PBXP222050
CHECKED BY: D. WINSTEAD	CONTRACT NO.: FA8903-21-D-0008
SUBMITTED BY: D. PEARSON	TASK ORDER NO.: W50S8R23F0009
SIZE: ANSI D	

OHIO AIR NATIONAL GUARD
MANSFIELD LAHM AIR NATIONAL GUARD BASE, OH

JACOBS GOVERNMENT SERVICES
2600 MICHELSON SR. STE 500
IRVINE, CA 92612

MANSFIELD LAHM AIR NATIONAL GUARD BASE, OH
REPAIR B403 FOR CYBER
FA877006
ARCHITECTURAL WALL SECTIONS

SHEET ID
A-401

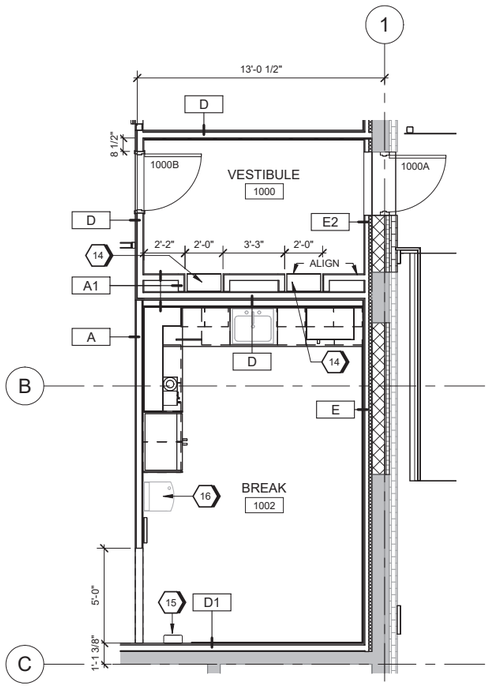

D2 ENLARGED VESTIBULE FLOOR PLAN
SCALE 1/4" = 1'-0"

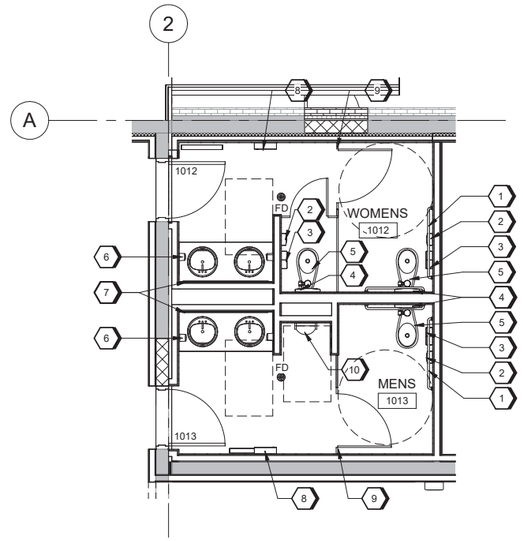

E4 ENLARGED SYMBOL FLOOR PLAN - RESTROOMS
SCALE 1/4" = 1'-0"

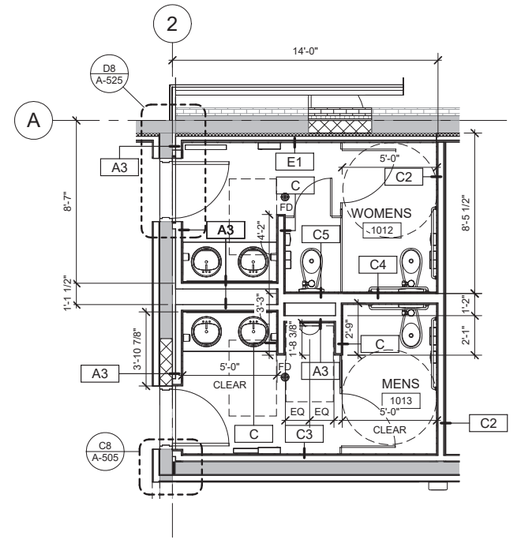

E6 ENLARGED DIMENSION FLOOR PLAN - RESTROOMS
SCALE 1/4" = 1'-0"

GENERAL SHEET NOTES

A. REFER TO SHEET A-701 FOR PARTITION TYPES AND WALL FRAMING DIMENSIONS.

B. REFER TO ACCESSIBILITY SHEET A-003 FOR ALL REQUIRED ACCESSIBLE MOUTING HEIGHTS.

C. REFER TO INTERIORS DRAWINGS FOR TYPICAL WALL TILE AND PAINT COLORS.

D. SLOPE TILE AT FLOOR DRAINS.

#SHEET KEYNOTES

1. STAINLESS STEEL GRAB BAR, SEE DETAIL E6/A-504
2. SURFACE-MOUNTED SANITARY NAPKIN DISPOSAL
3. SURFACE-MOUNTED MULTI-ROLL TOILET TISSUE DISPENSER
4. SURFACE-MOUNTED SEAT COVER DISPENSER
5. FLOOR MOUNTED PORCELAIN TOILET
6. SURFACE-MOUNTED SOAP DISPENSER
7. LED FRAMELESS BACKLITE MIRROR 54" W X 42" H
8. SURFACE-MOUNTED PAPER DISPENSER AND WASTE RECEPTACLE
9. TOILET PARTITION
10. WALL MOUNTED PORCELAIN URINAL
11. MECHANICAL EQUIPMENT, REFER TO MECHANICAL
12. 4X4 HSS STRUCTURAL POST, SEE STRUCTURE
13. PERFORATED ALUMINUM PANEL, 3/4" DEPTH - HORIZONTAL PROFILE, PAINTED TO MATCH EXISTING BUILDING
14. CELLPHONE LOCKER
15. SURFACE MOUNTED FIRE EXTINGUISHER CABINET
16. DRINKING FOUNTAIN WITH WATER BOTTLE FILLER

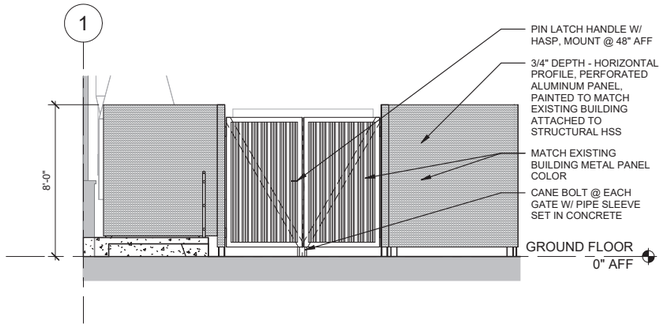

A3 MECHANICAL ENCLOSURE - SOUTH ELEVATION
SCALE 1/4" = 1'-0"

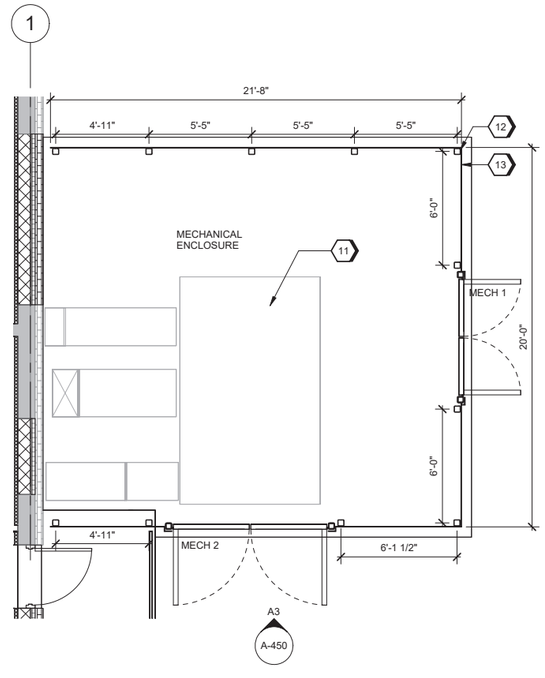

A6 ENLARGED FLOOR PLAN - MECHANICAL ENCLOSURE
SCALE 1/4" = 1'-0"

GRAPHIC SCALE(S)

0 2' 4' 8' 12'
SCALE: 1/4" = 1'-0"

PLAN NORTH

LICENSED ARCHITECT
DONALD WINSTEAD
No. ARC.2020029
05-08-26
STATE OF OHIO

MARK	DESCRIPTION	DATE

ISSUE DATE: MAY 2026
AMG PROJECT NO.: PBXP222050
CONTRACT NO.: FA8903-21-D-0008
TASK ORDER NO.: W50S8R23F0009

DESIGNED BY: B. SMITH
DRAWN BY: E. NEWSUM
CHECKED BY: D. WINSTEAD
SUBMITTED BY: D. PEARSON
SIZE: ANSI D

OHIO AIR NATIONAL GUARD
MANSFIELD LAHM AIR NATIONAL GUARD BASE, OH

JACOBS GOVERNMENT SERVICES
2600 MICHELSON SR. STE 500
IRVINE, CA 92612

MANSFIELD LAHM AIR NATIONAL GUARD BASE, OH
REPAIR B403 FOR CYBER
FA877006
ARCHITECTURAL ENLARGED PLANS AND ELEVATIONS

SHEET ID
A-450

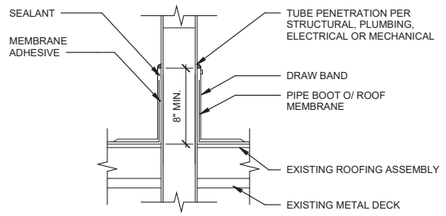

F2 TYP ROOF PENETRATION
SCALE 1 1/2" = 1'-0"

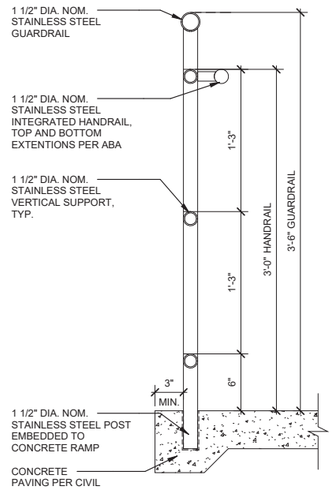

SECTION

E4 RAMP RAILING
SCALE 1 1/2" = 1'-0"

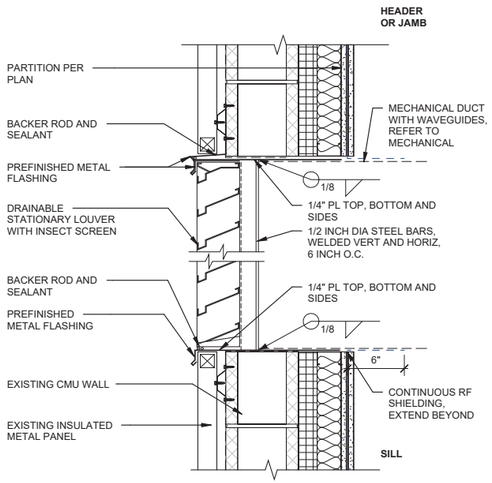

E6 LOUVER SECTION
SCALE 1 1/2" = 1'-0"

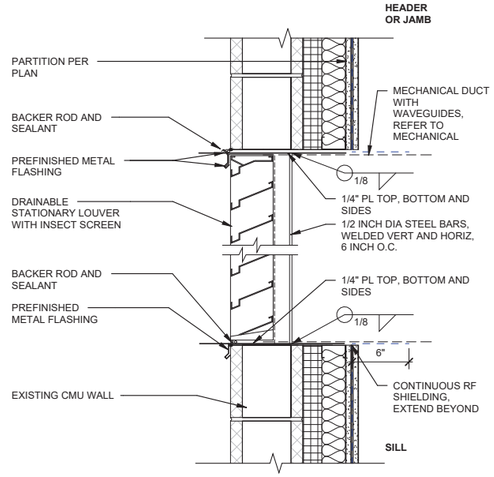

E8 LOUVER SECTION
SCALE 1 1/2" = 1'-0"

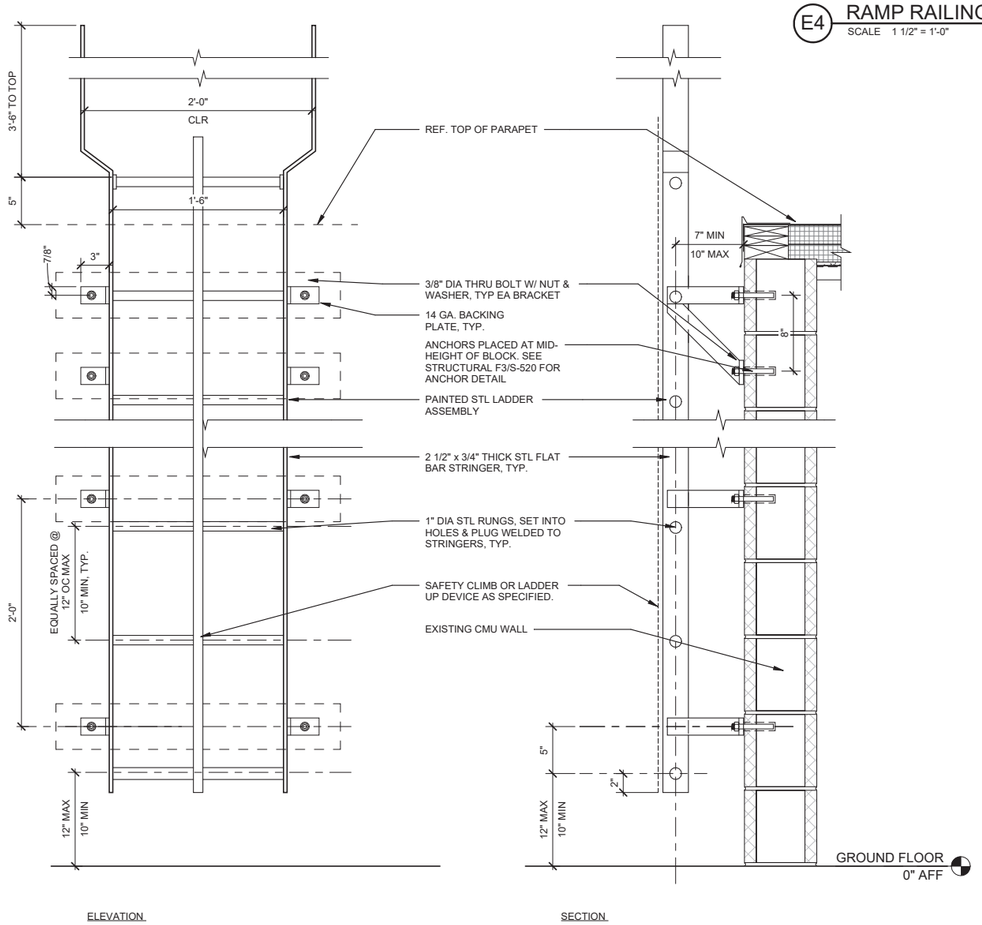

A1 ROOF LADDER SECTION AND ELEVATION
SCALE 1 1/2" = 1'-0"

SECTION

B6 CANE BOLT W/ LOCK
SCALE 1 1/2" = 1'-0"

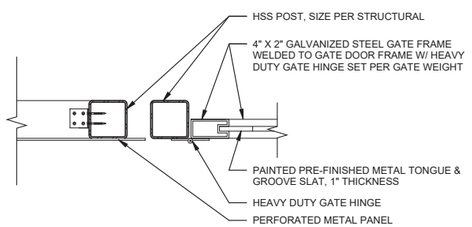

A6 GATE JAMB DETAIL
SCALE 1 1/2" = 1'-0"

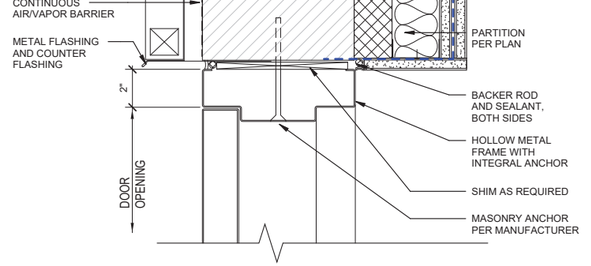

C8 EXT. DOOR HEAD / JAMB
SCALE 3" = 1'-0"

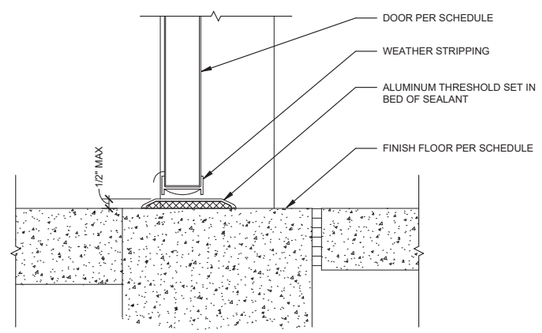

A8 EXTERIOR HOLLOW METAL DOOR SILL
SCALE 3" = 1'-0"

LICENSED ARCHITECT
DONALD WINSTEAD
No. ARC.2020029
05-08-26
STATE OF OHIO

MARK	DESCRIPTION	DATE

ISSUE DATE: MAY 2026
AMG PROJECT NO.: PBXP222050
CONTRACT NO.: FA8903-21-D-0008
TASK ORDER NO.: W50S8R23F0009

DESIGNED BY: R. SMITH
DRAWN BY: E. NEWSUM
CHECKED BY: D. WINSTEAD
SUBMITTED BY: D. PEARSON
SIZE: ANSI D

OHIO AIR NATIONAL GUARD
MANSFIELD LAHM AIR NATIONAL GUARD BASE, OH

JACOBS GOVERNMENT SERVICES
2600 MICHELSON SR, STE 900
IRVINE, CA 92612

MANSFIELD LAHM AIR NATIONAL GUARD BASE, OH
REPAIR B403 FOR CYBER
FA877006
ARCHITECTURAL EXTERIOR DETAILS

SHEET ID
A-501

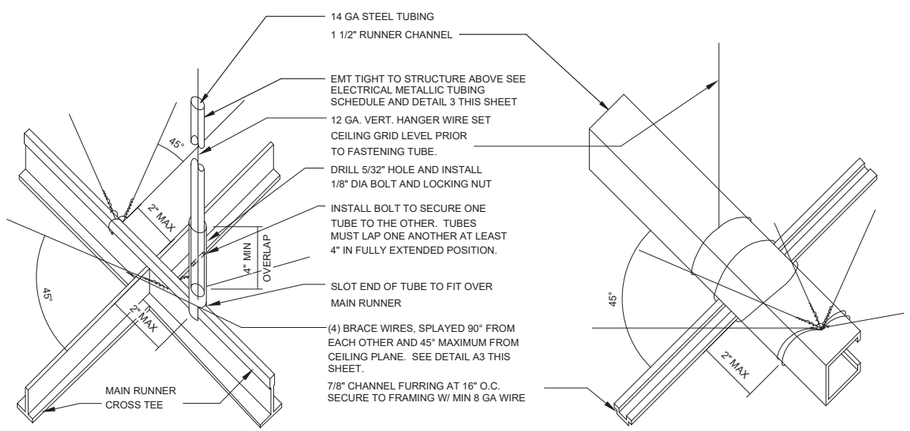

NOTE:
A. ALL CEILING LIGHT FIXTURES AND HVAC AIR REGISTERS MUST BE SUPPORTED BY A MINIMUM OF 4 HANGERS. CEILING SYSTEM MUST NOT SUPPORT OTHER ITEMS.
B. SPLAYED BRACING WIRE AT LOCATIONS WHERE CEILING SYSTEM WEIGHTS 31 POUNDS OR MORE (TEST FOR 440 LBS)

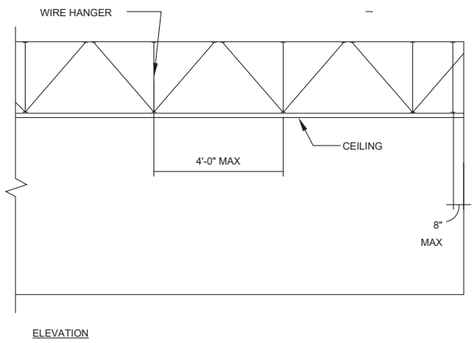

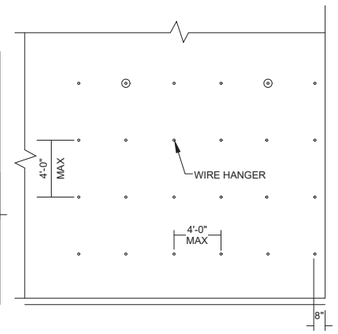

SUSPENDED CEILING NOTES

A. CEILING SUSPENSION SYSTEMS MUST COMPLY WITH 2024 IBC SEC 808.1.1, ASTM C635 AND C636.
B. PROVIDE LATERAL SUPPORT WITH 12 GA. WIRES SPLAYED IN 4 DIRECTIONS, 90 DEGREES APART, SPACED AT 12'-0" O.C. AND WITHIN 4'-0" FROM EACH WALL. NO ATTACHMENT TO ROOF DECK.
C. ALLOWANCE MUST BE PROVIDED FOR LATERAL MOVEMENT OF SYSTEM. MAIN AND CROSS RUNNERS MAY BE ATTACHED TO ADJACENT WALLS WITH CLEARANCE BETWEEN WALL AND RUNNER AT REMAINING 2 WALLS. RECESSED LIGHT FIXTURES NOT OVER 56 LBS AND PENDENT LIGHT FIXTURES NOT OVER 20 LBS. MAY BE POSITIVELY ATTACHED TO CEILING SYSTEM RUNNERS WITH SCREW OR BOLTS.
D. LIGHTING FIXTURES: PRIOR TO ORDERING FIXTURES, VERIFY MOUNTING METHODS AND FINISHES. FLUORESCENT FIXTURES MOUNTED IN "T" BAR CEILINGS TO BE INDEPENDENTLY SUSPENDED 4 - 12 GA. STEEL WIRES.
E. SPLAYED BRACING WIRE AT LOCATIONS WHERE CEILING SYSTEM WEIGHTS 31 POUNDS OR MORE (TEST FOR 440 LBS)

SUSPENDED ACOUSTICAL CEILING

ELECTRICAL METALLIC TUBING (EMT) SCHEDULE	
SIZE (DIAMETER)	L (MAX. HEIGHT)
1/2"	5'-10"
3/4"	7'-8"
1"	9'-9"

NOTE: STRUTS OTHER THAN EMT, MAY REQUIRE ENGINEERING CALCULATIONS. - CONTRACTOR IS RESPONSIBLE TO CONTRACT A LICENSED STRUCTURAL ENGINEER AND SUBMIT THE CALCULATIONS.

SUSPENDED GYPSUM BOARD CEILING

METAL STUDS SCHEDULE	
SIZE (DIAMETER)	L (MAX. HEIGHT)
SINGLE 1 5/8" METAL STUD (20 GA)	UP TO 12'0"
BACK TO BACK SINGLE 1 5/8" METAL STUD (20 GA)	UP TO 15'0"
SINGLE 2 1/2" METAL STUD (20 GA)	UP TO 13'6"
BACK TO BACK SINGLE 2 1/2" METAL STUD (25 GA)	UP TO 15'0"

HANGERS: HANGERS FOR SUSPENDED CEILINGS MUST BE NOT LESS THAN THE SIZES SET FORTH IN 2024 IBC SEC 808.0, FASTENED TO OR EMBEDDED IN THE STRUCTURAL FRAMING, FLOOR OR ROOF DECK. HANGERS MUST BE SADDLE TIED AROUND MAIN RUNNERS TO DEVELOP THE FULL STRENGTH OF THE HANGERS. LOWER END OF FLAT HANGERS MUST BE BOLTED WITH 3/8" BOLTS TO RUNNER CHANNELS OR BENT TIGHTLY AROUND RUNNERS AND BOLTED TO THE MAIN PART OF THE HANGER.

F6 SUSPENSION SYSTEM (PLAN / ELEVATION)
SCALE 1 1/2" = 1'-0"

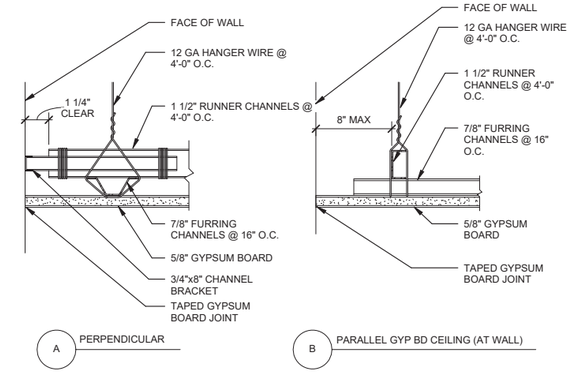

NOTE:
HANGAR WIRE TO ATTACH TO STRUCTURAL CEILING GRID SUPPORT GRIDWITHIN THE SECURE BOUNDARY

D8 CEILING SUPPORT DETAILS (GYPSUM BOARD)
SCALE 3" = 1'-0"

D1 SUSPENSION SYSTEM
SCALE 1 1/2" = 1'-0"

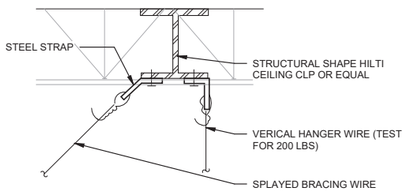

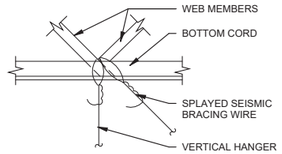

NOTES:
SPLAY WIRES PARALLEL TO FRAMING. SPLAY WIRES CAN NOT BE PERPENDICULAR TO FRAMING.

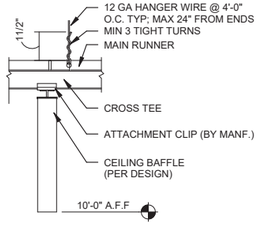

NOTE:
HANGAR WIRE TO ATTACH TO STRUCTURAL CEILING GRID SUPPORT GRID WITHIN THE SECURE BOUNDARY

C1 HANGAR WIRE CONNECTION
SCALE 1 1/2" = 1'-0"

C4 BAFFLE SUSPENSION DETAIL
SCALE 3" = 1'-0"

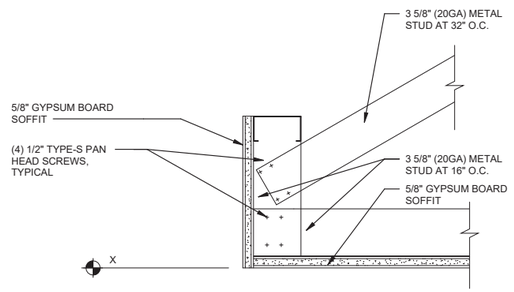

A1 CEILING SOFFIT
SCALE 3" = 1'-0"

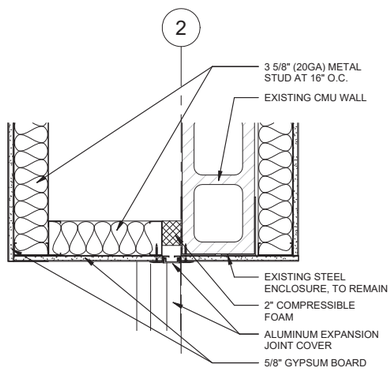

A4 EXPANSION JOINT @ THRESHOLD - SECTION
SCALE 1 1/2" = 1'-0"

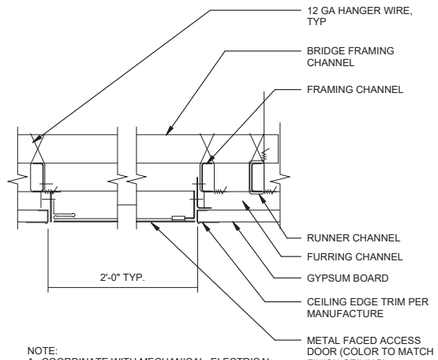

NOTE:
A. COORDINATE WITH MECHANICAL, ELECTRICAL, PLUMBING AND TELECOM EQUIPMENT PLACEMENT ABOVE THE CEILING FOR REQUIRED CEILING ACCESS PANEL LOCATIONS.
B. HANGAR WIRE TO ATTACH TO STRUCTURAL CEILING GRID SUPPORT GRID WITHIN THE SECURE BOUNDARY.

A6 CEILING ACCESS PANEL
SCALE 3" = 1'-0"

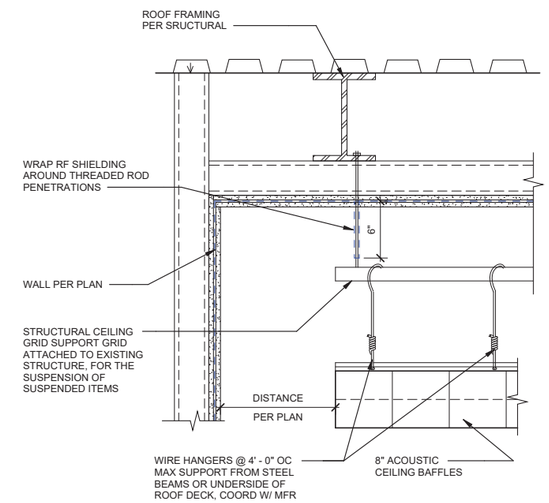

A8 SUSPENDED CEILING BAFFLE CONNECTION
SCALE 1 1/2" = 1'-0"

LICENSED ARCHITECT
DONALD WINSTEAD
No. ARC.2020029
05-08-26
STATE OF OHIO

MARK	DESCRIPTION	DATE

ISSUE DATE: MAY 2026
AMG PROJECT NO.: PBXP222050
CONTRACT NO.: FA8903-21-D-0008
TASK ORDER NO.: W50S8R23F0009
DESIGNED BY: B. SMITH
DRAWN BY: E. NEWSUM
CHECKED BY: D. WINSTEAD
SUBMITTED BY: D. PEARSON
SIZE: ANSI D

OHIO AIR NATIONAL GUARD
MANSFIELD LAHM AIR NATIONAL GUARD BASE, OH

JACOBS GOVERNMENT SERVICES
2600 MICHELSON SR. STE 500
IRVINE, CA 92612

MANSFIELD LAHM AIR NATIONAL GUARD BASE, OH
REPAIR B403 FOR CYBER
FA877006
ARCHITECTURAL CEILING DETAILS

SHEET ID
A-502

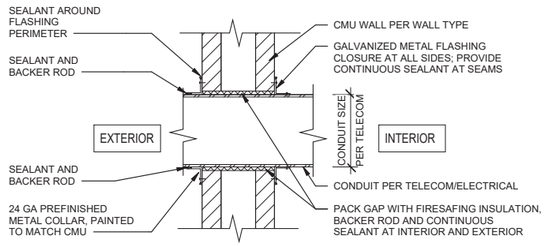

F1 CONDUIT PENETRATION AT EXTERIOR CMU

SCALE 1 1/2" = 1'-0"

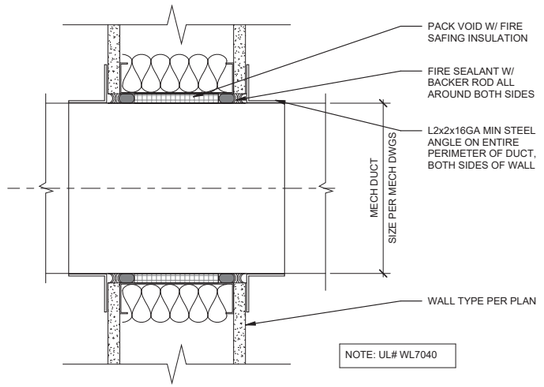

F3 FIRE RATED / STC DUCT PENETRATION

SCALE 3" = 1'-0"

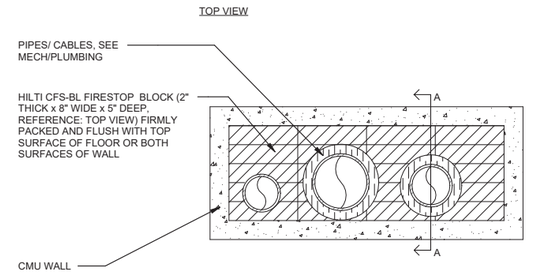

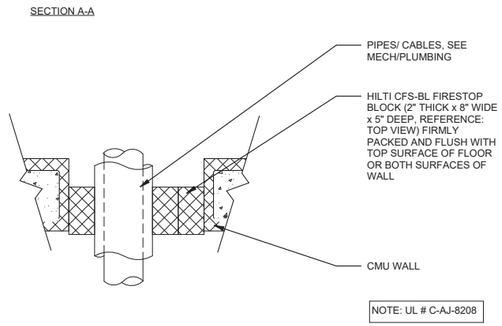

F6 FIRE RATED/STC MULTIPLE PENETRATIONS AT CMU WALL

SCALE 1 1/2" = 1'-0"

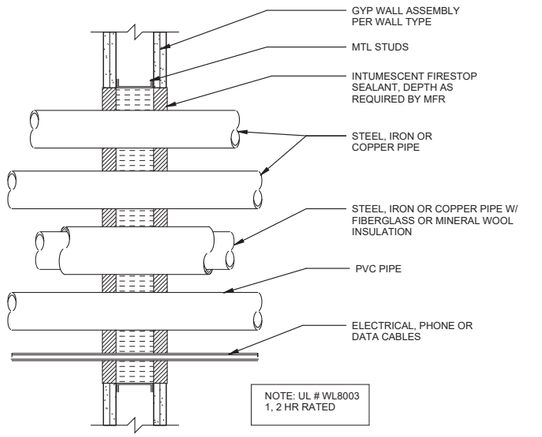

C1 FIRE RATED/STC MULTI PENETRATIONS AT GYP. BD. WALL

SCALE 12" = 1'-0"

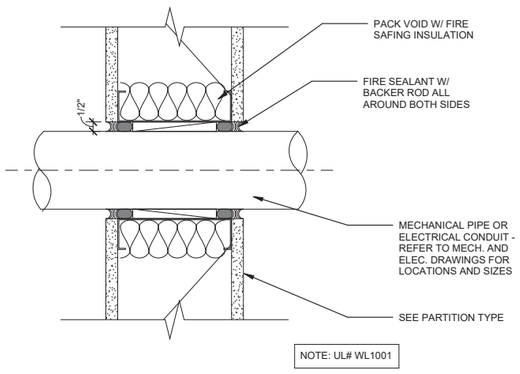

C3 FIRE RATED/STC PIPE & CONDUIT PENETRATION

SCALE 3" = 1'-0"

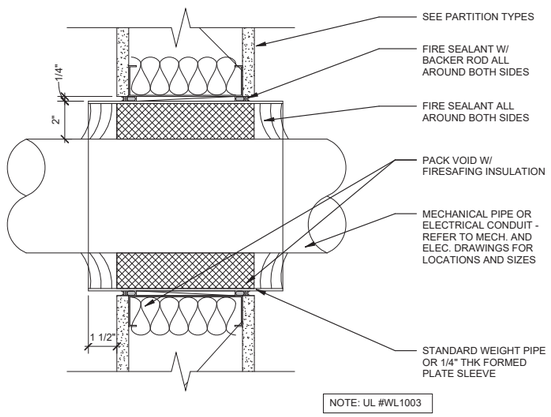

C6 TYP. RATED MECH PIPE OR ELEC. CONDUIT PENETRATION

SCALE 3" = 1'-0"

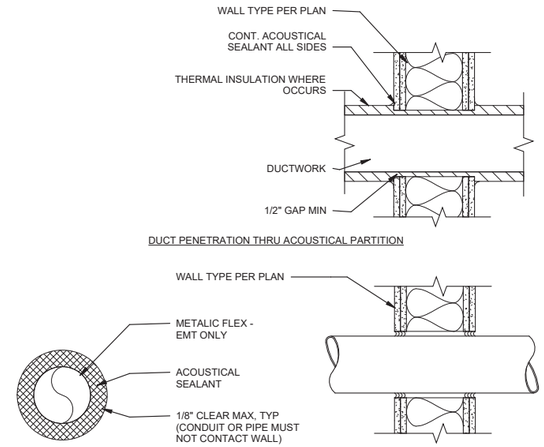

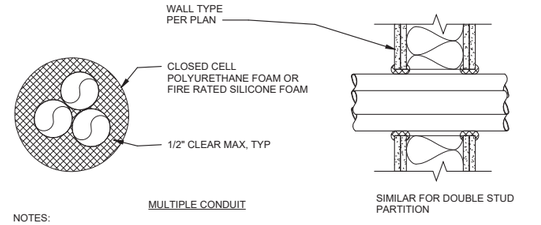

NOTES:

A. PENETRATIONS OF ACOUSTICAL PARTITIONS BY CONDUIT, CABLE, PIPES, ETC MUST BE ACOUSTICALLY SEALED AS SHOWN. ANY GAP LARGER THAN 1/2" MUST BE COVERED WITH GYPSUM BOARD, LAPPED A MINIMUM OF 2" AND SCREWED BEFORE USING ACOUSTICAL SEALANT.
B. REFER TO ELECTRICAL, MECHANICAL, AND PLUMBING DRAWINGS FOR GROUNDING OF PIPES, CONDUITS AND DUCTS FOR SENSITIVE SPACES
C. FOR SECURE WALLS, USE ACOUSTICAL SEALANT PER ICD 705 INSTEAD OF SILICON SEALANT.
D. REFER TO TELECOM DETAILS FOR CABLE TRAY WALL PENETRATION DETAIL
E. FIRESTOP ALL PENETRATIONS THROUGH FIRE RATED WALLS

A8 TYPICAL WALL PENETRATION DETAILS

SCALE 1 1/2" = 1'-0"

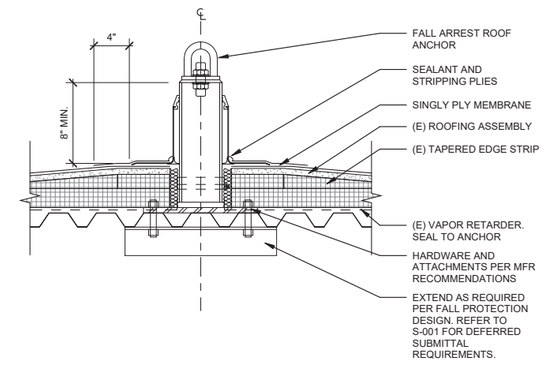

A1 ROOF ANCHOR @ METAL DECK

SCALE 1 1/2" = 1'-0"

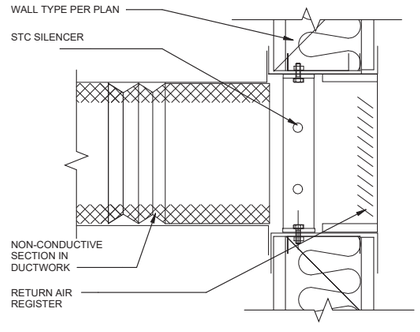

A3 HVAC DUCT THRU SECURED WALL

SCALE 3" = 1'-0"

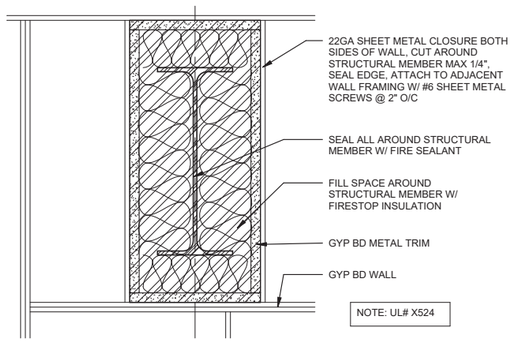

A6 FIRE RATED/STC WALL PENETRATION @ STRUCTURAL ELEMENTS

SCALE 3" = 1'-0"

DONALD WINSTEAD
No. ARC.2020/029
05-08-26
LICENSED ARCHITECT
STATE OF OHIO

MARK	DESCRIPTION	DATE

DESIGNED BY: R. SMITH
DRAWN BY: E. NEWSUM
CHECKED BY: D. WINSTEAD
SUBMITTED BY: D. PEARSON
SIZE: ANSI D
ISSUE DATE: MAY 2026
AMG PROJECT NO.: PBXP222050
CONTRACT NO.: FA8903-21-D-0008
TASK ORDER NO.: W50S8R23F0009

OHIO AIR NATIONAL GUARD
MANSFIELD LAHM AIR NATIONAL GUARD BASE, OH

JACOBS GOVERNMENT SERVICES
2600 MICHELSON SR, STE 500
IRVINE, CA 92612

MANSFIELD LAHM AIR NATIONAL GUARD BASE, OH
REPAIR B403 FOR CYBER
FA877006
ARCHITECTURAL WALL PENETRATION DETAILS

SHEET ID
A-503

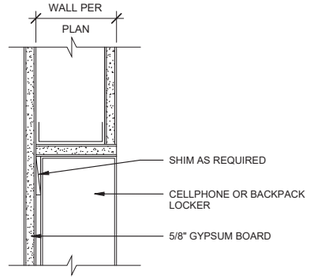

SECTION AT PARTITION WALL

F1 CELLPHONE LOCKER HEAD (JAMB SIM)
SCALE 3" = 1'-0"

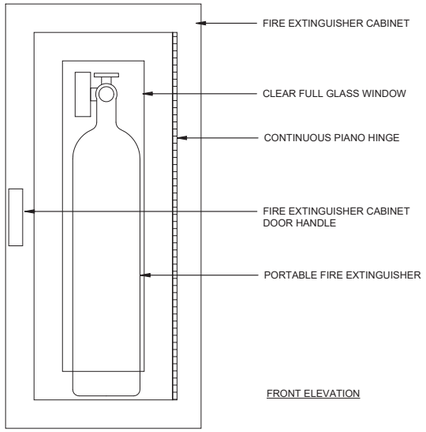

FRONT ELEVATION

FIRE EXTINGUISHER REQUIREMENTS:

A. PROVIDE PORTABLE FIRE EXTINGUISHER PER ANSI/NFPA 10 AND ANSI/NFPA 711 REQUIREMENTS AND TITLE 10 OCR
B. ALLOWABLE TRAVEL DISTANCE BETWEEN FIRE EXTINGUISHERS NOT TO EXCEED 75 FEET
C. CABINET FINISH: STAINLESS STEEL #4 FINISH
D. CABINET IS NOT TO BE INSTALLED IN SECURE PERIMETER WALL (ICD 705) LOCATIONS (WALL TYPE D AND E)

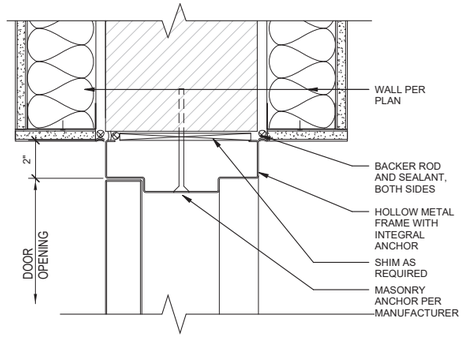

F5 INT DOOR HEAD / JAMB
SCALE 3" = 1'-0"

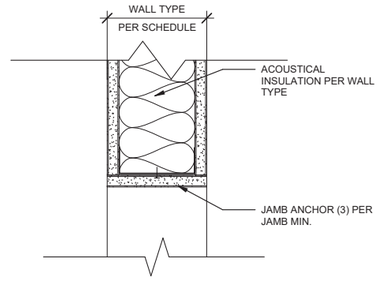

F7 INT HM DR CASED OPENING
SCALE 3" = 1'-0"

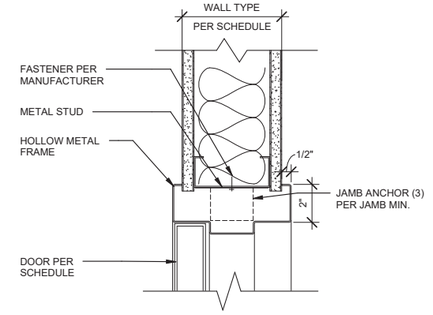

F9 INT HM DR HEAD
SCALE 3" = 1'-0"

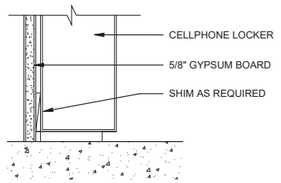

SECTION AT PARTITION WALL

D1 CELLPHONE LOCKER BASE
SCALE 3" = 1'-0"

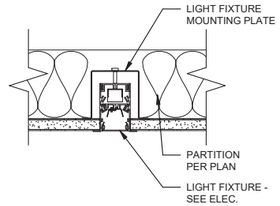

D5 LIGHT STRIP FIXTURE
SCALE 3" = 1'-0"

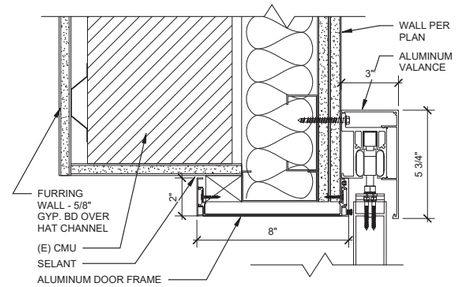

D7 SLIDING INTERIOR DOOR HEAD
SCALE 3" = 1'-0"

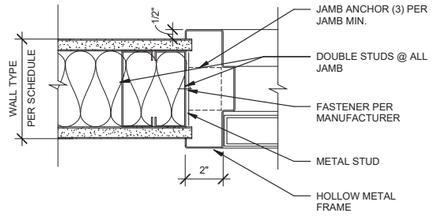

D9 INT HM DR JAMB
SCALE 3" = 1'-0"

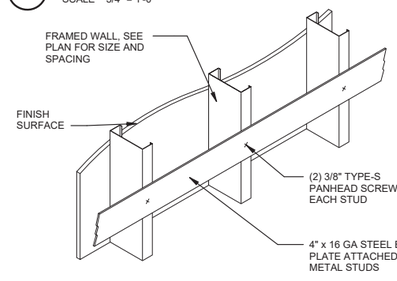

NOTE: FOR PAPER TOWEL DISPENSER, TOILET PAPER HOLDERS AND SIMILAR

D3 FIRE EXTINGUISHER CABINET
SCALE 3/4" = 1'-0"

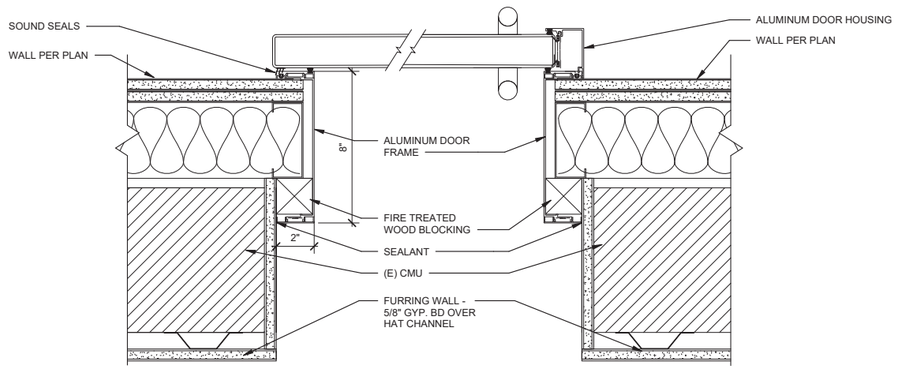

B5 SLIDING INTERIOR DOOR JAMB
SCALE 3" = 1'-0"

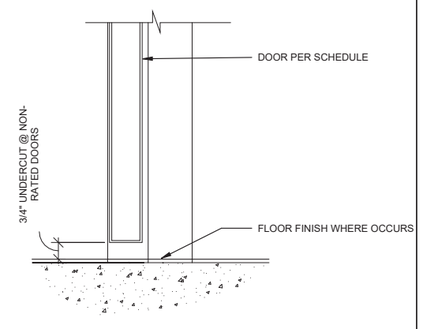

B9 CONTINUOUS FLOOR FINISH
SCALE 3" = 1'-0"

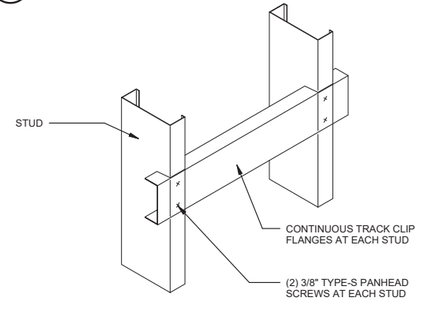

NOTE: FOR GRAB BARS, WALL HUNG CABINETS, TV'S AND SIMILAR

A3 TRACK BACK (HEAVILY LOADED 250 LBS)
SCALE 1" = 1'-0"

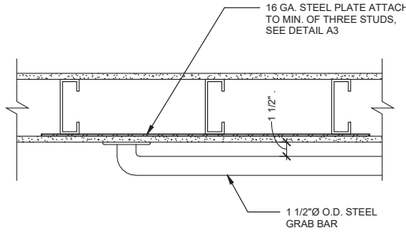

E6 GRAB BAR
SCALE 3" = 1'-0"

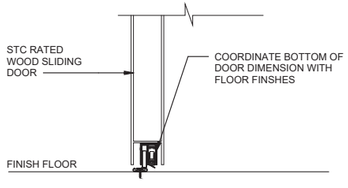

A7 SLIDING INTERIOR DOOR SILL
SCALE 3" = 1'-0"

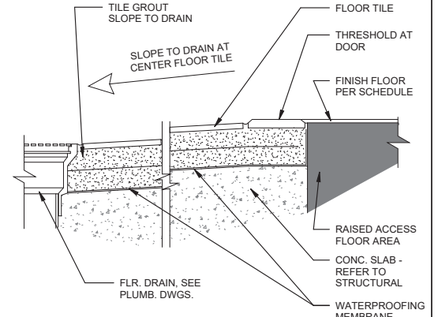

A9 FLOOR SLOPE AT DRAIN
SCALE 1 1/2" = 1'-0"

DONALD WINSTEAD
No. ARC.2020029
05-08-26
LICENSED ARCHITECT
STATE OF OHIO

MARK	DESCRIPTION	DATE

ISSUE DATE: MAY 2026
AMG PROJECT NO.: PBXP222050
CONTRACT NO.: FA8903-21-D-0008
TASK ORDER NO.: W50S8R23F0009

DESIGNED BY: R. SMITH
DRAWN BY: E. NEWSUM
CHECKED BY: D. WINSTEAD
SUBMITTED BY: D. PEARSON
SIZE: ANSI D

OHIO AIR NATIONAL GUARD
MANSFIELD LAHM AIR NATIONAL GUARD BASE, OH

JACOBS GOVERNMENT SERVICES
2600 MICHELSON SR. STE 500
IRVINE, CA 92812

MANSFIELD LAHM AIR NATIONAL GUARD BASE, OH
REPAIR B403 FOR CYBER
FA877006
ARCHITECTURAL INTERIOR DETAILS

SHEET ID
A-504

TYPE B-3 FINAL

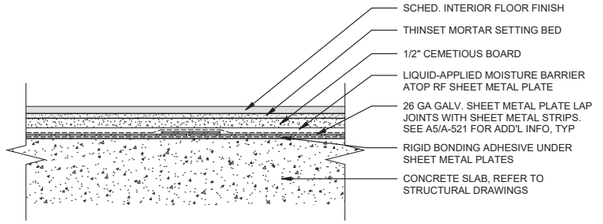

F1 RF @ RESTROOM SLAB
SCALE 3" = 1'-0"

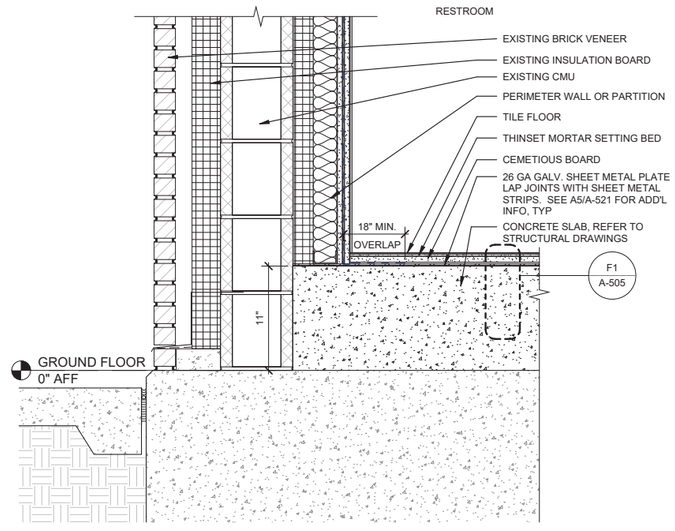

D1 SLAB @ RESTROOM
SCALE 1 1/2" = 1'-0"

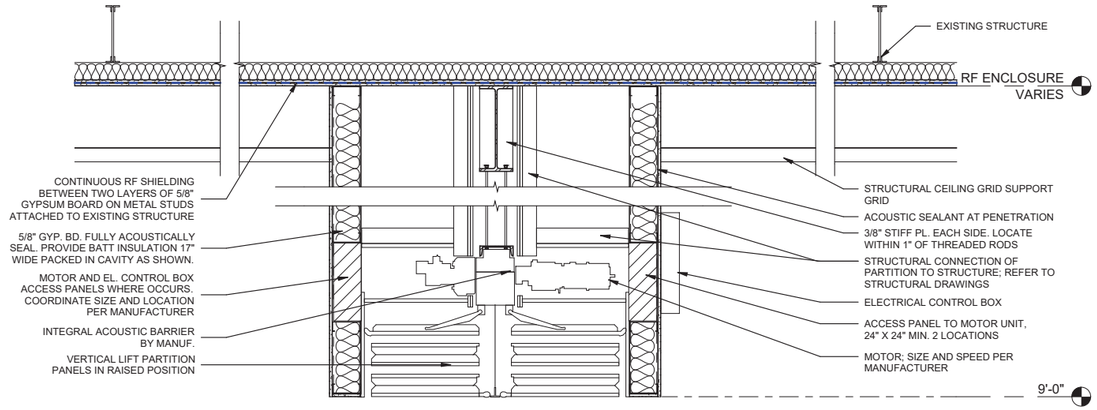

E6 VERTICAL PARTITION HEAD
SCALE 3/4" = 1'-0"

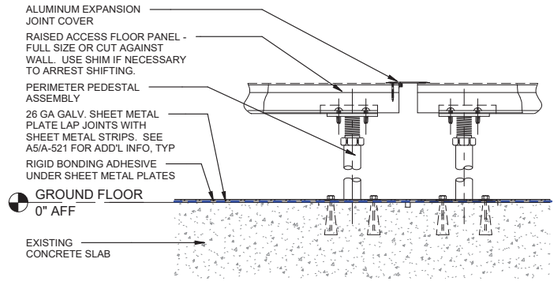

D4 EXPANSION JOINT @ FLOOR
SCALE 1 1/2" = 1'-0"

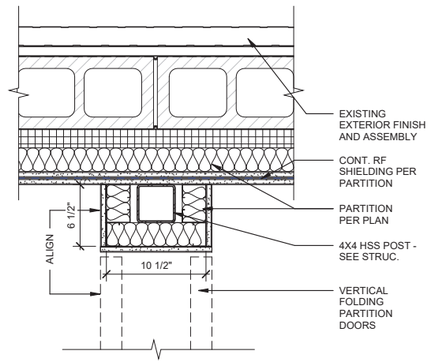

D7 COLUMN FUR OUT
SCALE 1 1/2" = 1'-0"

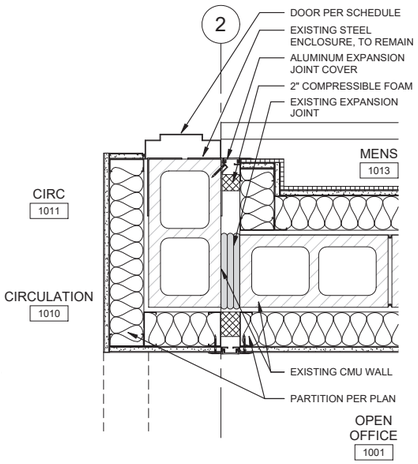

C8 PLAN DETAIL - EXPANSION JOINT
SCALE 1 1/2" = 1'-0"

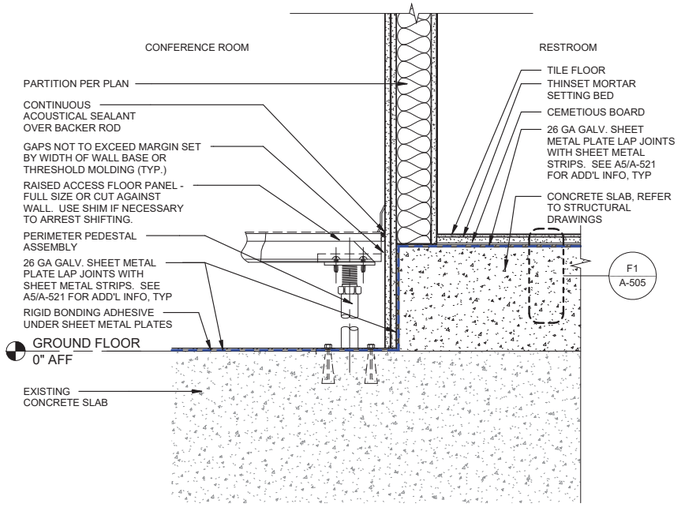

A1 SLAB @ RESTROOM/ CONFERENCE INT.
SCALE 1 1/2" = 1'-0"

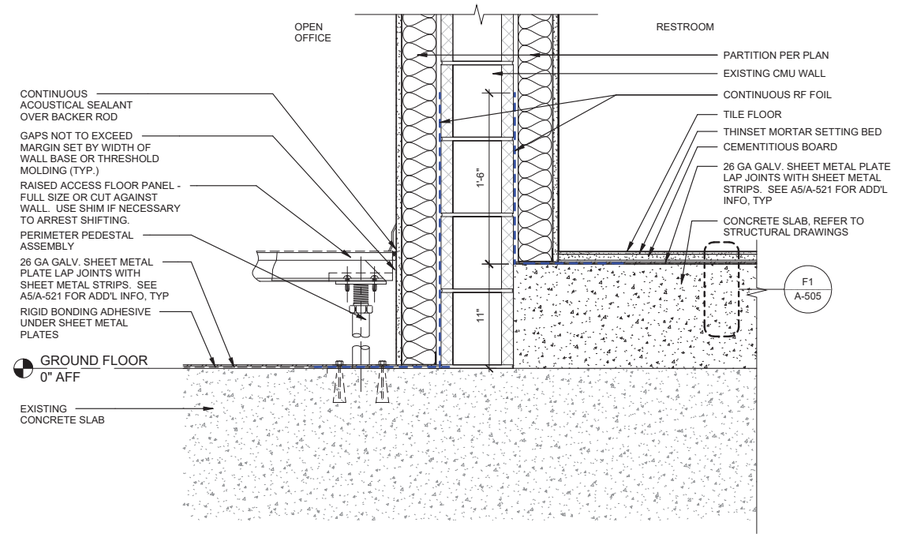

A4 SLAB @ RESTROOM INT
SCALE 1 1/2" = 1'-0"

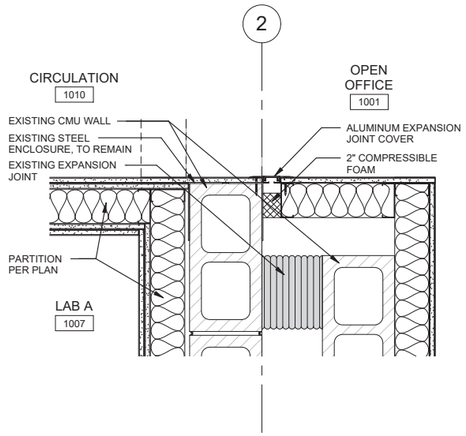

A8 PLAN - DETAIL - EXPANSION JOINT
SCALE 1 1/2" = 1'-0"

LICENSED ARCHITECT
DONALD WINSTEAD
No. ARC.2020029
05-08-26
STATE OF OHIO

MARK	DESCRIPTION	DATE

DESIGNED BY: R. SMITH
DRAWN BY: E. NEWSUM
CHECKED BY: D. WINSTEAD
SUBMITTED BY: D. PEARSON
SIZE: ANSI D
ISSUE DATE: MAY 2026
AMG PROJECT NO.: PBXP222050
CONTRACT NO.: FA8903-21-D-0008
TASK ORDER NO.: W50S8R23F0009

OHIO AIR NATIONAL GUARD
MANSFIELD LAHM AIR NATIONAL GUARD BASE, OH

JACOBS GOVERNMENT SERVICES
2600 MICHELSON SR. STE 500
IRVINE, CA 92612

MANSFIELD LAHM AIR NATIONAL GUARD BASE, OH
REPAIR B403 FOR CYBER
FA877006
ARCHITECTURAL INTERIOR DETAILS

SHEET ID
A-505

PROTECTIVE TECHNICAL BARRIER (PBT) NOTES

1. PROVIDE COMPLETE ENCLOSURE INCLUDING FLOOR, WALLS, CEILING, DOORS, PENETRATIONS, AND EMBEDDED STRUCTURAL MEMBERS TO FORM CONTINUOUS RF SHIELDED ENCLOSURE PER ICD-705 VERSION 1.5.1.

2. RF SHIELDING WORK MUST BE SUPERVISED AND INSPECTED BY GOVERNMENT RF ACCREDITING AUTHORITY – INSTALLATION WILL BE OVERSEEN BY ONSITE REPRESENTATIVES DURING THEIR PERIODIC SITE VISITS.

3. RF SHIELDING SYSTEM INCLUDES, BUT IS NOT LIMITED TO:
   A. ADHERED RF SHIELD
   B. WELDED RF SHEILD
   C. RF SHIELDED DOORS FOR ACCESS INTO FACILITY (ICD-705 PERIMETER)
   D. ELECTRICAL AND ELECTRONIC PENETRATIONS OF SHIELD
   E. STRUCTURAL PENETRATIONS
   F. MECHANICAL AND UTILITY PENETRATIONS (I.E. AIR DUCTS, GAS, AND WATER)

4. PROVIDE THE FOLLOWING SHOP DRAWINGS AND SUBMITTALS FOR GOVERNMENT AND A/E REVIEW:
   A. INSTALLATION DRAWINGS
   B. PENETRATION SCHEDULE LISTING EACH PENETRATION OF RF SHIELD MADE THROUGH WALLS AND CEILING (FLOOR PENETRATIONS NEED NOT BE LISTED). PROVIDE EACH PENETRATION WITH A UNIQUE NUMBER AND BRIEF DESCRIPTION (E.G. CONDUIT, PIPE, DUCTWORK, ETC). AND TREATMENT DESCRIPTION (E.G. GROUNDED, DIELECTRIC BREAK, ETC).
   C. DETAIL DRAWINGS SHOWING FOLLOWING:
      a. LOCATION
      b. NUMBER
      c. METHOD OF PENETRATING SHIELDING MATERIAL
      d. FABRICATION DETAILS FOR PENETRATIONS OF THE SHIELDING MATERIAL AND COMPLETE RF SHIELDED ENCLOSURE TO INCLUDE DOORS
      e. ERECTION DETAILS
      f. SEQUENCE OF ERECTION
   D. MANUFACTURER'S DATA, CATALOG CUTS, AND PRINTED DOCUMENTATION REGARDING THE WORK FOR THE SHIELDING SYSTEM
   E. PRODUCTS REQUIREMENT SUBMITTAL INCLUDE, BUT ARE NOT LIMITED TO, THE FOLLOWING:
      a. RF SHIELDED DOOR
      b. CONDUCTIVE TAPE
      c. FOIL MATERIALS
      d. SHEET METAL PLATES
   F. DOCUMENT SHOWING QUALIFICATIONS OF SPECIFIED PERSONNEL
   G. OPERATION AND MAINTENANCE DATA
      a. MAINTENANCE MANUALS
         - ASSEMBLY DRAWINGS INCLUDING PENETRATION LOCATIONS AND INSTALLATION DETAILS
         - CONSTRUCTION DRAWINGS AND SPECIFICATIONS FOR RF SHIELDING
         - PREVENTIVE MAINTENANCE INSTRUCTIONS FOR PERIODIC INSPECTION, TESTING AND SERVICING, LUBRICATION, ALIGNMENT, CALIBRATION, AND ADJUSTMENT EVENTS NORMALLY ENCOUNTERED
         - SPARE PARTS DATA APPROVED AND VERIFIED BY GOVERNMENT ACCREDITING AUTHORITY THAT INCLUDES COMPLETE LIST OF RECOMMENDED PARTS AND SUPPLIES WITH CURRENT UNIT PRICES AND SOURCE OF SUPPLY.
      b. MANUFACTURER'S WRITTEN INSTRUCTIONS FOR MAINTENANCE OF RF SHIELDING SYSTEM

5. COMPLETE RF SHIELDING SYSTEM MUST MEET 14khz-10Ghz FLEXIBLE METALIZED SHEET AND METAL SHIELDING: 40dB MINIMUM WHEN TESTED IN ACCORDANCE WITH INSTITUTE OF ELECTRICAL AND ELECTRONIC ENGINEERS (IEEE) 299 (2006; R 2012) STANDARD METHOD FOR ELECTROMAGNETIC SHIELDING ENCLOSURES.

6. PROVIDE AN RF SHIELDING SYSTEM COORDINATOR (RFC) WHOSE DUTIES INCLUDE, BUT NOT LIMITED TO, COORDINATION OF CONSTRUCTION ACTIVITIES WITH THE GOVERNMENT RF ACCREDITING AUTHORITY, COORDINATION OF ALL TRADES INSTALLING OR PENETRATING THE RF SHIELDING SYSTEM. RFC MUST HAVE TWO YEARS OF "FOREMAN" TYPE EXPERIENCE AND BE FAMILIAR WITH CONSTRUCTION WORK AND WORK INTERACTIONS AMONG MULTIPLE TRADES. SUBMIT RESUME SHOWING RFC'S QUALIFICATIONS FOR APPROVAL.

7. PROVIDE FIELD SAMPLES OF RF FOIL AND CONDUCTIVE TAPE.

8. HOLD A PRE-INSTALLATION MEETING WITH CONTRACTIVE OFFICER'S REPRESENTATIVE, GOVERNMENT RF ACCREDITING AUTHORITY,SUBCONTRACTORS, AND INSTALLERS WORKING IN, ON, OR NEAR THE RF SHIELD TO DISCUSS COORDINATION REQUIREMENTS AND INSTRUCTIONS TO ENSURE INTEGRITY OF RF SHIELD.

9. PROTECT EQUIPMENT DELIVERED AND STORED FROM EXCESSIVE HUMIDITY AND TEMPERATURE VARIATION, DIRT, AND OTHER CONTAMINANTS.

10. INSTALL RF SHIELDING ONLY AFTER BUILDING HAS BEEN WEATHER ENCLOSED.

11. PROVIDE MAINTENANCE SUPPLIES SUFFICIENT FOR 3-YEAR PERIOD OR OPEN-CLOSE CYCLES, WHICHEVER IS GREATER, FOR EACH RF SHIELDED DOOR.

12. FURNISH ONE SET OF RF GASKETS FOR EACH HINGED RF SHIELDED DOOR. PROVIDE ONE SET OF MFR RECOMMENDED AND CONTRACTING OFFICER APPROVED SPARE PARTS FOR INSTALLED RF SHIELDED DOORS OF EACH STYLE.

13. FURNISH ONE FULL SET OF TOOLS REQUIRED TO MAINTAIN THE DOORS AND NOT TYPICALLY AVAILABLE FROM TOOL VENDORS. FURNISH ENVIRONMENTALLY SAFE LUBRICANTS, CLEANING SOLVENTS, OR COATINGS IN SUFFICIENT QUANTITIES TO LAST FOR 6 MONTHS.

14. PROVIDE ONE SET OF SPECIAL TOOLS, CALIBRATION DEVICES, AND INSTRUMENTS REQUIRED FOR OPERATION, CALIBRATION, AND MAINTENANCE OF EQUIPMENT.

15. PROVIDE STANDARD PRODUCTS FROM A MANUFACTURER REGULARLY ENGAGED IN SUCCESSFUL FABRICATION OF SUCH PRODUCTS THAT HAVE BEEN IN SATISFACTORY USE FOR AT LEAST 2 YEARS. EQUIPMENT MUST BE SUPPORTED BY A SERVICE ORGANIZATION THAT, IN THE OPINION OF THE CONTRACTING OFFICER, IS REASONABLY CONVENIENT TO THE SITE.

16. EACH SHIELDED DOOR MUST HAVE MANUFACTURER 'S NAME, ADDRESS, TYPE OR STYLE, MODEL OR SERIAL NUMBER, AND CATALOG NUMBER ON A PLATE SECURED TO THE ITEM OF EQUIPMENT.

17. RF FOIL MUST BE WOVEN POLYETHYLENE MATERIAL BONDED AND SANDWICHED BETWEEN TWO ALUMINUM SHEETS. RF FOIL MUST BE NON-TOXIC/NON-CARCINOGENIC AND MUST HAVE A NOMINAL THICKNESS OF 0.011 INCHES. FOIL MUST HAVE PUNCTURE RESISTANCE OF 115 PSI. FOIL MUST MEET ASTM C411 FOR TEMPERATURE RANGE OF -40 TO 200 DEGREES F.

18. CONDUCTIVE TAPE MUST BE ALUMINUM FOIL WITH CONDUCTIVE ADHESIVE. ELECTRICAL RESISTANCE THROUGH ADHESIVE MUST BE 0.01 OHMS OR LESS PER MIL-STD-220 METHOD 307 MAINTAINED AT 5 PSI MEASURED OVER 1 SQUARE INCH OF SURFACE AREA.

19. RF SHIELDED DOORS MUST BE FACTORY ASSEMBLED UNITS CONSISTING OF DOOR LEAVES, DOORFRAMES, THRESHOLDS, HARDWARE, AND CONTACT STRIPS. COMPLETE ASSEMBLIES ARE REQUIRED. DOOR MUST HAVE A MINIMUM OF 40dB ATTENUATION AS DESCRIBED BELOW:
   A. DOORS MUST PROVIDE 40dB ATTENUATION OVER THE FREQUENCY RANGE OF 14kHz TO 10 GHz. RF GASKETS INCLUDED ON THE DOOR MUST BE REPLACEABLE AND REQUIRE MINIMAL MAINTENANCE.
   B. METAL MUST BE THICKER WHERE INDICATED OR REQUIRED FOR ITS USE AND PURPOSE. METAL THRESHOLDS OF THE TYPE FOR PROPER SHIELDING AT THE FLOOR MUST BE PROVIDED.
   C. FIRE RATED DOORS AND ASSEMBLIES MUST MEET NFPA 80 AND NFPA 80A REQUIREMENTS AND BE CERTIFIED AND BEAR THE IDENTIFYING LABEL OF A NATIONALLY RECOGNIZED AND QUALIFIED TESTING AGENCY.
   D. RF SHIELDED DOORS MUST BE PROVIDED BY A SINGLE SUPPLIER WHO HAS BEEN REGULARLY ENGAGED IN THE MANUFACTURE OF THESE ITEMS FOR AT LEAST 5 YEARS. THE ASSEMBLIES MUST BE SUPPLIED COMPETE WITH RIGID STRUCTURAL FRAME, HINGES, LATCHES, ANCHORS, AND PARTS NECESSARY FOR OPERATION.
   E. PRODUCTS SUPPLIED MUST DUPLICATE ASSEMBLIES THAT HAVE BEEN SUITABLE FOR ATTACHMENT TO THE SURROUNDING STRUCTURE AND SHIELD.
   F. MISCELLANEOUS MATERIAL MUST BE PROVIDED FOR A COMPLETE SYSTEM.
   G. ENCLOSURE DOOR MUST BE NONSAGGING, NONWARPING, AND HAVE A CLEAR OPENING AS SHOWN ON DRAWINGS. DOOR AND FRAME ASSEMBLY MUST HAVE A SOUND RATING AS SHOWN ON THE DOOR SCHEDULE.

20. DOOR MUST BE EQUIPPED WITH WELL-BALANCED, ADJUSTABLE BALL-BEARING, OR ADJUSTABLE RADIAL THRUST BEARING HINGES SUITABLE FOR EQUAL WEIGHT DISTRIBUTION OF SHIELDED DOORS. HINGES MUST ALLOW ADJUSTMENT IN TWO DIRECTIONS. FORCE NECESSARY TO MOVE DOORS MUST NOT EXCEED 5 POUNDS. NON-REMOVABLE PINS MUST BE PROVIDED FOR PERIMETER DOORS.

21. MINIMUM OF ONE SET OF THRESHOLD PROTECTORS MUST BE PROVIDED. PROTECTORS MUST CONSIST OF PORTABLE RAMPS THAT PROTECT THE THRESHOLD WHEN EQUIPMENT CARTS ARE USED TO MOVE HEAVY ITEMS ACROSS THE THRESHOLD. THE SLOPE ON THE RAMP MUST NOT EXCEED 4:1 ON EITHER SIDE. RAMPS MUST BE DESIGNED TO SUPPORT A 2,000 LB VERTICAL FORCE APPLIED TO A 3 BY ½ INCH AREA FOR AN EQUIPMENT DOOR. CONSIDER THE FORCE AS APPLIED TO THE CONTACT AREA BETWEEN THE THRESHOLD AND THE DOOR. PROVIDE MOUNTING BRACKETS AT A CONVENIENT LOCATION TO STORE THE RAMP WHEN NOT IN USE; CONFIRM LOCATION WITH COR.

22. EACH RF SHIELDED DOOR LEAF MUST BE PROVIDED WITH A PERMANENTLY ATTACHED HOLD OPEN AND STOP DEVICE. SHIELDED DOORS MUST HAVE A FASTENER PLATE WELDED ONTO THE DOOR.

23. EMERGENCY EXIT RF SHIELDED DOORS MUST BE EQUIPPED WITH SINGLE MOTION EGRESS HARDWARE. FORCE REQUIRED TO LATCH AND UNLATCH EMERGENCY EXIT HARDWARE ON RF SHIELDED DOORS MUST COMPLY WITH NFPA 101. FIELD ALTERATIONS OR MODIFICATIONS TO PANIC HARDWARE WILL NOT BE ALLOWED.

24. RF SHIELDED DOORS MUST BE FACTORY GALVANIZED. TOUCH UP ANY DAMAGED FINISH. ALL DOORS MUST HAVE A PAINTED FINISH, AS INDICATED ON ROOM FINISH SCHEDULE.

25. REFER TO DOOR SCHEDULE FOR STC RATINGS.

26. PROVIDE MINIMUM HARDWARE REINFORCEMENT GAUGES, AS SPECIFIED IN SDI/DOOR A250.6. DRILL AND TAP DOORS AND FRAMES TO RECEIVE FINISH HARDWARE. PREPARE DOORS AND FRAMES FOR HARDWARE IN ACCORDANCE WITH APPLICABLE REQUIREMENTS OF SDI/DOOR 250.6. FOR ADDITIONAL REQUIREMENTS REFER TO ANSI/BHMA A156.115. BUILD ADDITIONAL REINFORCEMENT FOR SURFACE-APPLIED HARDWARE REQUIREMENTS OF SDI/DOOR A250.8, AS APPLICABLE.

27. AFTER BECOMING FAMILIAR WITH ALL DETAILS OF THE WORK, VERIFY DIMENSIONS IN THE FIELD AND ADVISE THE CONTRACTING OFFICER OF ANY DISCREPANCY BEFORE PERFORMING THE WORK.

28. DUCTWORK, METALLIC PIPING, AND OTHER CONDUCTIVE CONVEYANCES REQUIRE A PENETRATION PROTECTION METHOD BE USED WHEN PENETRATING THE RF SHIELD. PENETRATIONS OF THE SHIELD INCLUDE, BUT ARE NOT LIMITED TO, RF FOILS (WALLS) AND METAL ROOF DECK (ROOF).

29. ACCEPTABLE PENETRATION PROTECTION METHODS ARE THE FOLLOWING:
   A. A NON-CONDUCTIVE BREAK AT THE SHIELD PENETRATION LOCATIONS.
   B. A GROUND TO BUILDING STEEL OR THE COMMON BONDING NETWORK (CBN) AS NEAR AS PRACTICAL TO THE PENETRATION. THE GROUNDING CONNECTION FROM THE DUCT, PIPE, ETC. AT THE PENETRATION LOCATION TO THE BUILDING STEEL OR CBN MUST BE LESS THAN OR EQUAL TO 1 OHM OF DC RESISTANCE.
   C. NON-CONDUCTIVE SECTIONS SHALL BE INSTALLED WITHIN 18 INCHES OF THE BOUNDARY WALL, OR AS CLOSE TO THE BOUNDARY ON THE INTERNAL SECTION OF THE WALL. ALL PENETRATIONS SHALL BE BACKFILLED TO ENSURE OPENING/GAPS ARE PRESENT AND TO ENSURE THE ACOUSTICAL INTEGRITY OF THE WALL.

30.TRADES MUST BE INSTRUCTED BY THE GOVERNMENT RF ACCREDITING AUTHORITY IN ADVANCE OF THE RF SHIELDED SYSTEM INSTALLATION, TO ENSURE THAT ALL INDIVIDUALS ARE AWARE OF THE CRITICAL INSTALLATION REQUIREMENTS. COMPLIANCE NOTIFICATION MUST BE PROVIDED TO THE COR BEFORE MATERIALS ARE INSTALLED OR METHODS PERFORMED.

31.CLEANERS, SOLVENTS, COATINGS, FINISHES, PHYSICAL BARRIERS, AND DOOR THRESHOLD PROTECTORS MUST BE PROVIDED AS REQUIRED TO PROTECT THE SHIELDING SYSTEM FROM CORROSION, DAMAGE, AND DEGRADATION.

32.DURING THE RF SHIELDING SYSTEM INSTALLATION, THE GOVERNMENT RF ACCREDITING AUTHORITY MUST VERIFY AND APPROVE THE INSTALLATION FOR COMPLIANCE WITH THE DRAWINGS AND SPECIFICATIONS.

33.AFTER THE PERIMETER RF SYSTEM IS COMPLETED, BUT PRIOR TO FINISH MATERIALS BEING APPLIED AND EQUIPMENT INSTALLED, THE GOVERNMENT RF ACCREDITING AUTHORITY MUST INSPECT THE INSTALLATION FOR COMPLIANCE WITH THE DRAWINGS AND SPECIFICATIONS. IF INSTALLATIONS ARE REJECTED UPON INSPECTION, CONTRACTOR MUST MAKE MODIFICATIONS REQUIRED TO BRING INSTALLATION INTO COMPLIANCE WITH NO ADDITIONAL COST TO THE GOVERNMENT.

34.DEVELOP A QUALITY CONTROL PLAN TO ENSURE COMPLIANCE WITH CONTRACT REQUIREMENTS. MAINTAIN QUALITY CONTROL RECORDS FOR REQUIRED CONSTRUCTION OPERATIONS. SUBMIT QUALITY CONTROL PLAN TO COR.

35.PROVIDE A FIELD TRAINING COURSE FOR DESIGNATED OPERATING AND MAINTENANCE STAFF MEMBERS. TRAINING MUST BE PROVIDED FOR A TOTAL PERIOD OF 4 HOURS OF NORMAL WORKING TIME. FIELD TRAINING MUST COVER ALL THE ITEMS CONTAINED IN THE OPERATING AND MAINTENANCE MANUALS.

36. THE GENERAL CONTRACTOR WILL ACCOMPLISH THE FOLLOWING FIELD-TESTS, AND SUBMITTED RESULTS FOR GOVERNMENT REVIEW.
   A. TEST GROUNDING (EARTHING) RESISTANCE SHALL BE EQUAL TO OR LESS THEN 10 OHMS.
   B. TEST BONDING OF RF SHIELDING, RF SHIELDING DOORS, AND 26 GAUGE SHEET METAL USED IN RF SHIELDING APPLICATION EACH BONDED AND ATTACHED TO GROUND CONNECTION RESISTANCE SHALL BE 0 OHMS. THE SHEET METAL SHIELDING SHALL BE GROUNDED TO BUILDING STEEL WITH A CONNECTION AT INTERVALS NOT TO EXCEED EVERY 20FT.
   C. TEST EACH RF SHIELDED DOOR FRAME TO RF SHIELDING FOR CONTINUITY.
   D. TEST EACH RF SHIELDED SEAMS FOR CONTINUITY.

37. REPAIR DAMAGED RF SHIELDING:
   A. IF THE DAMAGE (TEAR, RIP, HOLE) MEASURES LESS THAN DIME-SIZED IN DIAMETER CAN BE REPAIRED BY COVERING THE DAMAGE WITH MANUFACTURER RECOMMENDED CONDUCTIVE ADHESIVE TAPE THAT COVERS THE ENTIRETY OF THE DAMAGE.
   B. IF THE DAMAGE MEASURES GREATER THAN DIME-SIZED IN DIAMETER, A PATCH CONSISTING OF A PIECE OF UNDAMAGED RF SHIELDING THAT IS LARGE ENOUGH TO OVERLAP THE DAMAGE BY GREATER THEN OR EQUAL TO 6 INCHES IN ALL DIRECTIONS. THE PATCH SEAMS MUST THEN BE SEALED USING MANUFACTURER RECOMMENDED CONDUCTIVE ADHESIVE TAPE.

38. DOOR CLOSURE MUST ALLOW FOR THE DOOR TO PROPERLY LATCH AFTER PERSON PASSES THRU THE DOOR AT ANY DOOR OPENING POSITION.

PTB INSTALLATION

CORNER INSTALLATIONS:
- AT ALL 3-WAY INSIDE CORNERS, FULLY ADHERE A 12 INCH BY 12 INCH BY 12 INCH WIDE FOLDED STRIP OF FLEXIBLE METALIZED SHEET (REFER TO DETAILS A1/AE521 AND D1/AE521). ENSURE THERE ARE NO GAPS OR TEARS INSIDE THE CORNER.
- AT ALL 3-WAY OUTSIDE CORNERS, FULLY ADHERE A 12 INCH BY 12 INCH FOLDED STRIP OF FLEXIBLE METALIZED SHEET (REFER TO DETAIL C1/AE521 AND F3/AE521.
- AT ALL VERTICAL AND HORIZONTAL INSIDE AND OUTSIDE 2-WAY CORNERS, FULLY ADHERE 18 INCH WIDE FOLDED STRIP OF FLEXIBLE METALIZED SHEET (9 INCH ALONG EACH SIDE OF THE CORNER). INSTALL CONTINUOUS FULL LENGTH OF THE WALL, FROM 3-WAY CORNER TO 3-WAY CORNER (REFER TO DETAILS A3/AE521, C3/AE521 & D3/AE581).

CEILING INSTALLATION:
- THE ENTIRE UNDERSIDE OF THE GYPSUM BOARD CEILING MUST BE COVERED WITH THE PROTECTIVE TECHNICAL BARRIER, FIRST BY DOING THE 3-WAY CORNERS AND THEN FINALLY BY COVERING THE ENTIRE CEILING WITH THE FLEXIBLE METALIZED SHEET FACING THE INTERIOR OF THE SHIELDED SPACE. PROVIDE FOR 18 INCH OVERLAP ONTO ADJOINING WALLS, ALL SIDES OF THE PERIMETER. APPLY CONTINUOUS CONDUCTIVE TAPE OVER ALL PENETRATIONS AND SEAMS PER SPECIFICATIONS HEREWITH AND PER DETAIL F1/AE521.
- SPECIAL ATTENTION MUST BE GIVEN TO CEILING HANGERS. A TIGHT, CONDUCTIVE METAL-TO-METAL SEAL MUST BE ACHIEVED BETWEEN THE FASTENER AND THE FLEXIBLE METALIZED SHEET. ONCE ATTACHED, PLACE A STRIP OF CONDUCTIVE TAPE OVER THE ENTIRE METAL SURFACE OF THE HANGER AND OVERLAP A DISTANCE OF 3 INCH AROUND THE HANGER.

WALL INSTALLATION:
- BEGINNING IN ONE CORNER, FULLY ADHERE FLEXIBLE METALIZED SHEET ONTO EXTERIOR FACE OF INSIDE LAYER OF GYPSUM BOARD, FACING THE INTERIOR OF THE SHIELDED SPACE. INSTALL AT PERIMETER WALLS FROM TOP OF WALL TO FLOOR SLAB AND FROM PERIMETER WALL TO PERIMETER WALL. CAREFULLY ALIGN THE MATERIAL WITH THE TOP EDGE OF WALL AND PROVIDE FOR 18 INCH OVERLAP ONTO ADJOINING FLOOR.

FLOOR INSTALLATION:
- BEGINNING IN ONE CORNER, FULLY ADHERE 26 GA. SHEET METAL TO FLOOR SLAB OVER FLEXIBLE METALIZED SHEET TO DEPTH OF 40 INCHES. 26 GA. SHEET METAL MUST BE FACING THE INTERIOR OF THE SHIELDED SPACE. CONCRETE SLAB MUST BE PROPERLY SEALED PRIOR TO INSTALLATION OF SHEET METAL.

TYPICAL JOINTS:
- AT THE SEAMS BETWEEN FLEXIBLE METALIZED SHEET, OVERLAY THE FLEXIBLE METALIZED SHEET BY 8 INCHES. COVER ALL JOINTS, DEVICE INTERFACE SEAMS, AND SCREW HEADS WITH 3 INCH WIDE CONDUCTIVE TAPE. AFTER THE INSTALLATION OF THE ACOUSTICAL CEILING SUSPENSION SYSTEM AND HANGERS, COVER FASTENER AT CLIPS WITH 3 INCH CONDUCTIVE TAPE.

TYPICAL VERTICAL AND HORIZONTAL JOINT APPLICATIONS:
- 3 INCH CONDUCTIVE TAPE MUST BE CENTERED ON SEAM THAT IS BEING SEALED TO ACHIEVE 4 INCH WIDTH OF CONDUCTIVE TAPE ON EACH SIDE OF SEAM (REFER TO DETAIL F5/AE581).

DOORS:
- INSTALL PROTECTIVE TECHNICAL BARRIER MATERIAL AROUND EDGE OF THE ROUGH OPENING AND SET DOOR FRAME INTO OPENING. INSTALL A 4 INCH WIDE STRIP OF PROTECTIVE TECHNICAL BARRIER BRIDGING FROM THE WALL TO DOOR FRAME CONTACT FLANGE. NO GAPS ARE PERMITTED TO BE VISIBLE AROUND THE PERIMETER OF THE DOOR. DOOR THRESHOLDS MUST BE INSTALLED TO MAKE CONTACT WITH THE INTEGRAL FLOOR PROTECTIVE TECHNICAL BARRIER AND DOOR FRAME.

PIPE PENETRATIONS:
- LAP PROTECTIVE TECHNICAL BARRIER UNDER THE PENETRATIONS FLANGE A MINIMUM OF 4 INCHES. TO ENSURE A GOOD ELECTRICAL BOND, APPLY CONDUCTIVE TAPE OVER FLANGE AND EXTEND A MINIMUM OF 4 INCHES BEYOND THE PENETRATION FLANGE.

JUNCTION BOXES AND OTHER PENETRATIONS:
- COVER WITH FLEXIBLE METALIZED SHEET FROM THE FACE TO BACKSIDE OF THE GYPSUM BOARD.

HVAC VENTS AND DUCTWORK:
- INSTALL FLEXIBLE METALIZED SHEET AROUND HVAC PENETRATION SO PROTECTIVE TECHNICAL BARRIER LAPS UNDER THE DEVICE FLANGE A MINIMUM OF 3 INCHES. TO ENSURE A GOOD ELECTRICAL BOND, APPLY CONDUCTIVE TAPE OVER FLANGE AND EXTEND A MINIMUM OF 3 INCHES BEYOND THE DEVICE FLANGE.

REPAIR OF PROTECTIVE TECHNICAL BARRIER:
- REPAIR ALL HOLES OR PENETRATIONS IN PROTECTIVE TECHNICAL BARRIER. ALL DAMAGE TO PROTECTIVE TECHNICAL BARRIER AND APPLICATION MATERIAL MUST BE REPAIRED OR REPLACED AS RECOMMENDED BY THE PROTECTIVE TECHNICAL BARRIER MANUFACTURER'S REPAIR INSTRUCTIONS.

FINISH OVER INSTALLED PROTECTIVE TECHNICAL BARRIER:
- PRIOR TO INSTALLING FINISH OVER PROTECTIVE BARRIER SYSTEM, REPAIR ALL HOLES OR PENETRATIONS IN PROTECTIVE TECHNICAL BARRIER. APPLY SECOND GYPSUM BOARD LAYER OVER FULLY ADHERED PROTECTIVE TECHNICAL BARRIER SYSTEM. UPON COMPLETION OF INSTALLATIONS, COVER ALL JOINTS AND STAPLE FASTENER PUNCTURES WITH 3 INCH WIDE CONDUCTIVE TAPE. PAINT OR OTHERWISE FINISH SURFACE IN ACCORDANCE WITH ROOM FINISH SCHEDULE AND BASE BUILDING REQUIREMENTS. TRIM DOORS AS REQUIRED.

MISCELLANEOUS:
- ALL FASTENERS AND ANCHORAGE WHICH PENETRATE THE PROTECTIVE TECHNICAL BARRIER MUST NOT CONTRIBUTE TO GALVANIC ACTION OF PROTECTIVE TECHNICAL BARRIER. FASTENERS MUST BE STAINLESS STEEL OR ZINC COATED.
- ALL PENETRATIONS THROUGH SECURE AREA PERIMETER MUST INCORPORATE GROUNDING ISOLATION, ACOUSTIC ISOLATION, PHYSICAL SECURITY DUCT WAVEGUIDE / ACOUSTIC ATTENUATION, AND SHIELDING MATERIALS.
- REFER TO TELECOM DRAWINGS FOR CONTROLLED ACCESS DEVICES AND INFORMATION.
- GROUND STEEL STUDS/TRACK MINIMUM EVERY 20 FT ON CONTROLLED SIDE.

PTB COMPONENTS

THE PROTECTIVE TECHNICAL BARRIER (PTB) SYSTEM CONSISTS OF THE FOLLOWING COMPONENTS:

- FLEXIBLE METALIZED SHEET
- 26 GA SHEET METAL
- CONDUCTIVE TAPE

ACOUSTICAL TESTING

SOUND TRANSMISSION COEFFICIENT (STC) RATED ASSEMBLIES ARE INCLUDED HEREIN FOR CONTRACTOR CONVENIENCE AND DO NOT RELEASE THE CONTRACTOR FROM ADDITIONAL STC REFERENCES NOT SPECIFICALLY NOTED ON THIS DRAWING.

REFER TO FLOOR PLANS AND PARTITION TYPES FOR STC RATINGS AND ASSEMBLIES. CONSTRUCT ALL PARTITIONS TO ACHIEVE THE REQUIRED STC RATINGS FOR ASSOCIATED PARTITION TYPES AND/OR DETAILS. REFER TO AE503 FOR WALL PENETRATION DETAILS FOR STC-50 RATED ASSEMBLIES. REFER TO DOOR SCHEDULE FOR SOUND CONTROL DOOR REQUIREMENTS.

ALL STC RATED ASSEMBLIES WITHIN THE SECURE AREA MUST BE FIELD-TESTED AND DEMONSTRATED TO PROVIDE THE ACCEPTED EQUIVALENT NOISE ISOLATION CLASS IN ACCORDANCE WITH ICD-705.

REQUIRED ACOUSTIC TESTING:

1. AUDIO TESTS MUST BE CONDUCTED TO VERIFY REQUIREMENTS ARE MET. TESTS MAY BE INSTRUMENTAL OR NON-INSTRUMENTAL AS APPROVED BY THE SITE SECURITY MANAGER (SSM). TEST METHOD USED MUST BE AS DETAILED IN THE CONSTRUCTION SECURITY PLAN (CSP).

2. INSTRUMENTAL ACOUSTIC TESTS:

   A. INSTRUMENTAL ACOUSTIC TESTS MUST ONLY BE CONDUCTED BY PERSONNEL WITH TRAINING IN AUDIO TESTING TECHNIQUES.
   B. WITH DOORS CLOSED, ALL WALLS AND OPENINGS (E.G., DUCTS, DOORS, OR OTHERS) IN ACOUSTICALLY RATED PARTITIONS MUST BE TESTED AT MULTIPLE LOCATIONS TO ENSURE THAT MINIMUM ACCEPTABLE NIC RATING HAS BEEN ACHIEVED.
   C. AUDIO TEST SOURCES MUST HAVE A VARIABLE SOUND LEVEL OUTPUT. (OUTPUT FREQUENCY RANGE TO INCLUDE NORMAL SPEECH.)
   D. TEST SPEAKERS MUST BE PLACED SIX FEET FROM THE TEST WALL AND 4 FEET OFF THE FLOOR.
   E. AUDIO GAIN OF THE TEST SOURCE MUST PRODUCE "LOUD OR VERY LOUD SPEECH" AS DEFINED BY SOUND GROUP 3 AND 4 LEVELS RESPECTIVELY.

REQUIRED STC RATING COMPLIANCE: STC COMPONENTS DETAILED HEREIN ARE DEPENDENT ON FIELD INSTALLATION. THEREFORE, IT IS THE CONTRACTOR'S RESPONSIBILITY TO ACHIEVE THE REQUIRED STC RATINGS (OR ACCEPTED EQUIVALENT NIC RATING) INDICATED ON THE DRAWINGS; TO TEST ALL RATINGS ACCORDING TO TEST PROTOCOLS INDICATED; AND TO PROVIDE WRITTEN DOCUMENTATION OF COMPLIANCE. NONCOMPLIANT STC RATED COMPONENTS MUST BE CORRECTED AND RETESTED UNTIL THEY REACH COMPLIANCE. COSTS ASSOCIATED WITH REMEDIAL MEASURES AND ADDITIONAL TESTING WILL BE BORNE BY THE CONTRACTOR.

ALL STC RATED PARTITIONS LOCATED ON THE PERIMETER OF THE SECURE AREA MUST BE COMPLETELY FINISHED ON BOTH SIDES, INCLUDING PAINT, FROM TOP OF FLOOR SLAB TO UNDERSIDE OF DECK ABOVE. PARTITIONS MUST BE FINISHED TO UNDERSIDE OF DECK REGARDLESS OF DECK ORIENTATION.

AT STC RATED WALLS, ALL ASSOCIATED PENETRATIONS, RECESSED ITEMS, AND OPENINGS MUST BE DEMONSTRATED TO COMPLY WITH THE STC RATING INDICATED.

ALL STC ASSEMBLIES MUST BE INSPECTED MIDWAY THROUGH CONSTRUCTION FOR COMPLIANCE WITH DETAILS INDICATED IN THE DRAWINGS. INSPECTION MUST BE PERFORMED BY A QUALIFIED, INDEPENDENT THIRD PARTY, APPROVED IN WRITING BY THE COR.

TESTING MUST BE SCHEDULED WITH THE COR SO AS TO BE WITNESSED BY SSM.

LICENSED ARCHITECT
DONALD WINSTEAD
No. ARC.2020/29
05-08-26
STATE OF OHIO

MARK	DESCRIPTION	DATE

DESIGNED BY: R. SMITH	ISSUE DATE: MAY 2026
DRAWN BY: E. NEWSUM	AMG PROJECT NO.: PBXP222050
CHECKED BY: D. WINSTEAD	CONTRACT NO.: FA8903-21-D-0008
SUBMITTED BY: D. PEARSON	TASK ORDER NO.: W50S8R23F0009
SIZE: ANSI D	

OHIO AIR NATIONAL GUARD
MANSFIELD LAHM AIR NATIONAL GUARD BASE, OH

JACOBS GOVERNMENT SERVICES
2600 MICHELSON SR, STE 500
IRVINE, CA 92612

MANSFIELD LAHM AIR NATIONAL GUARD BASE, OH
REPAIR B403 FOR CYBER
FA877006
ARCHITECTURAL SECURE AREA NOTES AND DETAILS

SHEET ID
A-520

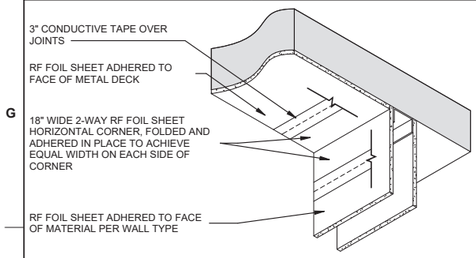

NOTE: CENTER 3" CONDUCTIVE TAPE ON SEAM THAT IS BEING SEALED TO ACHIEVE EQUAL WIDTH OF CONDUCTIVE TAPE ON EACH SIDE OF SEAM.

F1 RF (CEILING TO WALL) 2-WAY JOINT

SCALE 1" = 1'-0"

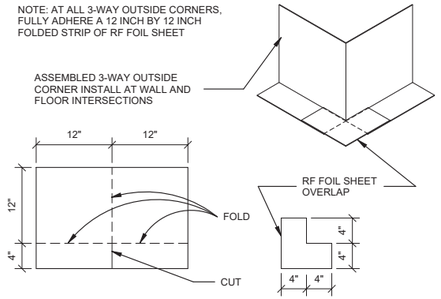

F3 RF (FLOOR TO WALL) 3-WAY OUTSIDE CORNER

SCALE 1" = 1'-0"

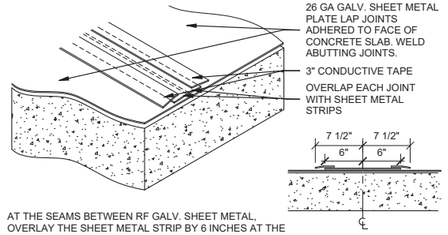

AT THE SEAMS BETWEEN RF GALV. SHEET METAL, OVERLAY THE SHEET METAL STRIP BY 6 INCHES AT THE CENTER LINE. CENTER 3" CONDUCTIVE TAPE ON SEAM THAT IS BEING SEALED TO ACHIEVE EQUAL WIDTH OF THE CONDUCTIVE TAPE ON EACH SIDE OF SEAM. COVER ALL JOINTS, DEVICE INTERFACE SEAMS, AND SCREW HEADS WITH 3 INCH WIDE CONDUCTIVE TAPE.

F5 RF HORIZONTAL FLOOR JOINT

SCALE 1" = 1'-0"

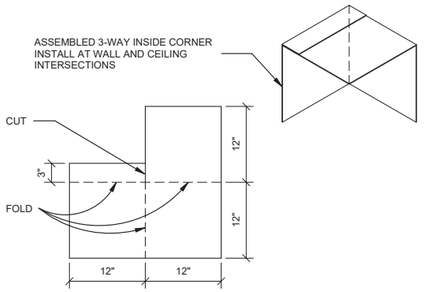

D1 RF (CEILING TO WALL) 3-WAY INSIDE CORNER

SCALE 1" = 1'-0"

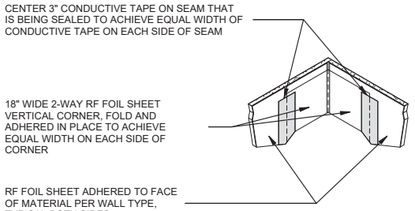

D3 RF INSIDE 2-WAY VERTICAL CORNER

SCALE 1" = 1'-0"

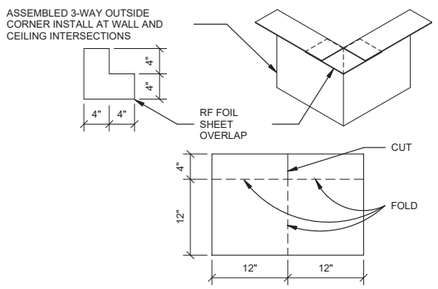

C1 RF (CEILING TO WALL) 3-WAY OUTSIDE CORNER

SCALE 1" = 1'-0"

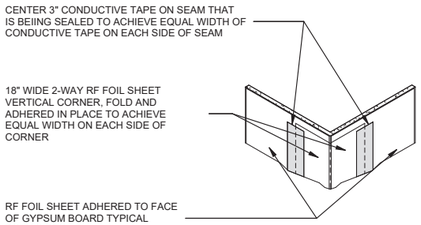

C3 RF OUTSIDE 2-WAY VERTICAL CORNER

SCALE 1" = 1'-0"

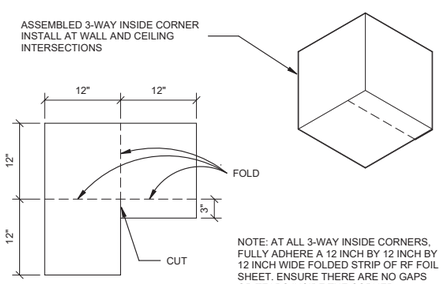

NOTE: AT ALL 3-WAY INSIDE CORNERS, FULLY ADHERE A 12 INCH BY 12 INCH BY 12 INCH WIDE FOLDED STRIP OF RF FOIL SHEET. ENSURE THERE ARE NO GAPS OR TEARS INSIDE THE CORNER.

A1 RF (FLOOR TO WALL) 3-WAY INSIDE CORNER

SCALE 1" = 1'-0"

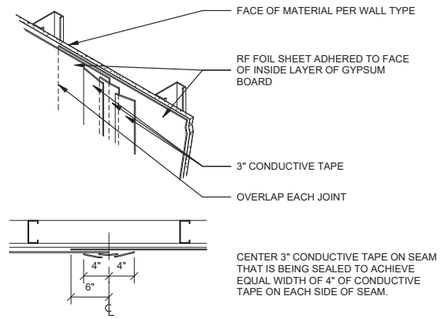

CENTER 3" CONDUCTIVE TAPE ON SEAM THAT IS BEING SEALED TO ACHIEVE EQUAL WIDTH OF 4" OF CONDUCTIVE TAPE ON EACH SIDE OF SEAM.

A3 RF VERTICAL WALL JOINT

SCALE 1" = 1'-0"

RF FOIL NOTES:
CONDUCTIVE FOIL TAPE MUST HAVE ELECTRICALLY CONDUCTIVE ADHESIVE. ATTACH RF FOIL TO SURFACES WITH SPRAY ADHESIVE, DO NOT STAPLE. OVERLAP ONTO STEEL PAN DECK CEILING AS MANUFACTURER RECOMMENDS. DRYWALL MUST BE FASTENED USING BLACK PHOSPHATE SCREWS WHERE PENETRATES RF FOIL. ALL SCREW HEADS MUST BE COVERED WITH CONDUCTIVE TAPE.

GROUND STEEL STUDS/TRACK MINIMUM EVERY 20 FT ON CONTROLLED SIDE. GROUNDING WIRE MUST BE EXACTLY 6 INCHES FROM THE WALL.

SURFACE-MOUNTED ITEMS ON THE FINISHED WALLS MUST NOT BE ATTACHED TO THE WALL IN A MANNER THAT AFFECTS RF SHIELDING PERFORMANCE. IF ITEMS ARE INSTALLED ON A FINISHED WALL TYPE WITH RF FOIL BETWEEN LAYERS OF GYPSUM BOARD USING SCREWS, SCREWS MUST MAINTAIN A METAL-TO-METAL SEAL BETWEEN THE SCREW, RF FOIL, AND GROUNDED METAL STUD.

AT LOCATIONS WITH RAISED ACCESS FLOOR AND RESTROOM LOCATIONS WITH TILE FLOOR FINISH: LAY DOWN 26 GA SHEET METAL SHEET ON TOP OF RF FOIL AND TAPE SEAMS; COVERAGE UP TO STUD WALL TRACKS. ATTACH ACCESS FLOOR PEDESTALS THROUGH PLYWOOD AND RF FOIL TO CONCRETE SLAB WITH SS OR ZINC-COATED ANCHORS.

DOORS:
INSTALL RF FOIL MATERIAL AROUND EDGE OF THE ROUGH OPENING AND SET DOOR FRAME INTO OPENING. INSTALL A 4 INCH WIDE STRIP OF RF FOIL BRIDGING FROM THE WALL TO DOOR FRAME CONTACT FLANGE. NO GAPS ARE PERMIMTTED TO BE VISIBLE AROUND THE PERIMETER OF THE DOOR. DOOR THRESHOLDS MUST BE INSTALLED TO MAKE CONTACT WITH THE INTEGRAL FLOOR RF FOIL AND DOOR FRAME.

PIPE PENETRATIONS:

LAP RF FOIL UNDER THE PENETRATION'S FLANGE A MINIMUM OF 6 INCHES. TO ENSURE A GOOD ELECTRICAL BOND, APPLY CONDUCTIVE TAPE OVER FLANGE AND EXTEND A MINIMUM OF 7x THE PIPE DIAMETER BEYOND PENETRATION FLANGE.

JUNCTION BOXES AND OTHER PENETRATIONS:
COVER WITH FLEXIBLE METALIZED SHEET FROM THE FACE TO BACKSIDE OF THE GYPSUM BOARD.

HVAC VENTS AND DUCTWORK:
INSTALL FLEXIBLE METALIZED SHEET AROUND HVAC PENETRATION SO RF FOIL LAPS UNDER THE DEVICE FLANGE A MINIMUM OF 6 INCHES. TO ENSURE A GOOD ELECTRICAL BOND, APPLY CONDUCTIVE TAPE OVER FLANGE AND EXTEND A MINIMUM OF 6 INCHES BEYOND THE DEVICE FLANGE.

CEILING PENETRATIONS:
A TIGHT, CONDUCTIVE METAL-TO-METAL SEAL MUST BE ACHIEVED BETWEEN THE FASTENER AND THE RF FOIL. COVER FASTENERS AT HANGER CLIPS WITH FOIL TAPE. ONCE HANGARS ARE ATTACHED, A STRIP OF CONDUCTIVE TAPE MUST BE PLACED OVER THE ENTIRE METAL SURFACE OF THE HANGER AND A DISTASNCE OF 6" AROUND IT.

REPAIR OF RF FOIL:
ALL FASTENERS AND ANCHORAGE WHICH PENETRATES THE RF FOIL MUST NOT CONTRIBUTE TO GALVANIC ACTION OF RF FOIL. FASTENERS MUST BE EITHER BLACK PHOSPHOROUS, STAINLESS STEEL, OR ZINC COATED.

ALL PENETRATIONS THROUGH SECURE AREA PERIMETER MUST INCORPORATE GROUNDING ISOLATION, ACOUSTIC ISOLATION, PHYSICAL SECURITY DUCT WAVEGUIDE / ACOUSTIC ATTENUATION, AND SHIELDING MATERIALS.

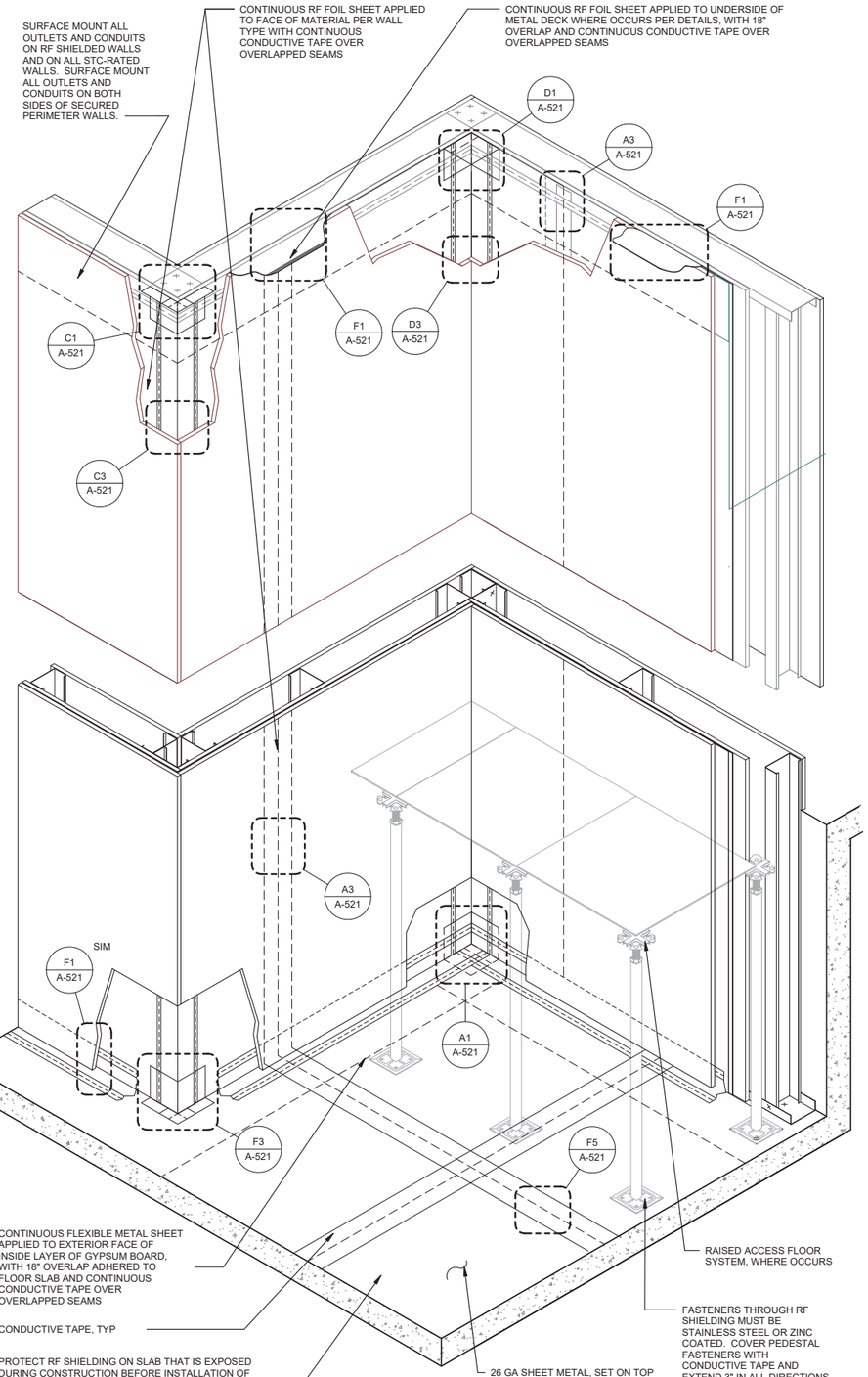

A5 RF SECURE AREA RF FOIL SYSTEM - TYPICAL INTERIOR WALL ISOMETRIC

SCALE 3/4" = 1'-0"

LICENSED ARCHITECT
DONALD WINSTEAD
No. ARC.2020029
05-08-26
STATE OF OHIO

MARK	DESCRIPTION	DATE

ISSUE DATE: MAY 2026
AMG PROJECT NO.: PBXP222050
CONTRACT NO.: FA8903-21-D-0008
TASK ORDER NO.: W50S8R23F0009

DESIGNED BY: R. SMITH
DRAWN BY: E. NEWSUM
CHECKED BY: D. WINSTEAD
SUBMITTED BY: D. PEARSON
SIZE: ANSI D

OHIO AIR NATIONAL GUARD
MANSFIELD LAHM AIR NATIONAL GUARD BASE, OH

JACOBS GOVERNMENT SERVICES
2600 MICHELSON SR. STE 500
IRVINE, CA 92812

MANSFIELD LAHM AIR NATIONAL GUARD BASE, OH
REPAIR B403 FOR CYBER
FA877006
ARCHITECTURAL INTERIOR RF DETAILS

SHEET ID
A-521

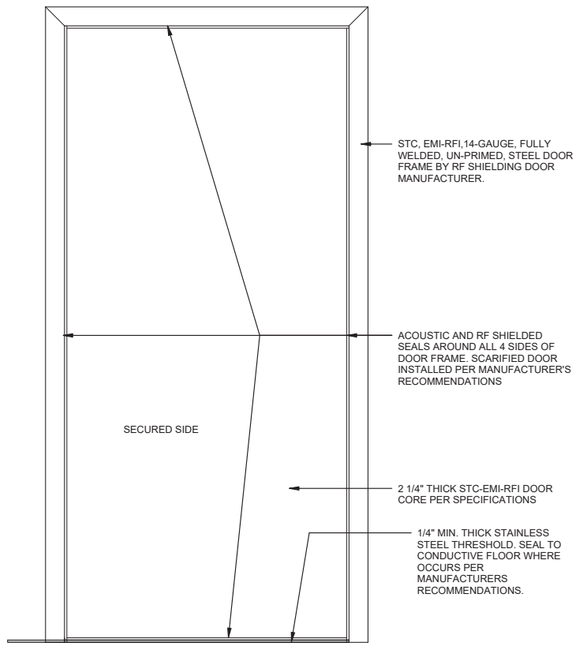

NOTES:

A. RF SHIELDED DOORS, FRAMES, ASTRAGALS, AND SILLS MUST BE FROM THE SAME MANUFACTURER. INSTALL PER MANUFACTURER'S RECOMMENDATIONS.

B. ALL COMPONENTS OF THE RF SHIELDED DOOR ASSEMBLY MUST MEET OR EXCEED THE SHIELDING REQUIREMENTS LISTED.

C. GROUND DOOR FRAMES IN A MANNER TO ENSURE A MECHANICAL BOND PER THE RF SHIELDING CONSULTANT.

D. ALL GROUND POINTS MUST BE 1/4" MINIMUM AWAY FROM THE CONDUCTIVE TAPE PER THE RF SHIELDING CONSULTANT.

E. PROVIDE ACOUSTIC AND RF SHIELDED SEALS AS REQUIRED TO MAINTAIN RATINGS.

F. REFER TO SHEETS A-601 FOR REQUIRED STC RATINGS.

C1 DOOR/FRAME RF SHIELDING ELEVATION

SCALE 1 1/2" = 1'-0"

A1 RF DRYWALL EXPANSION JOINT

SCALE 6" = 1'-0"

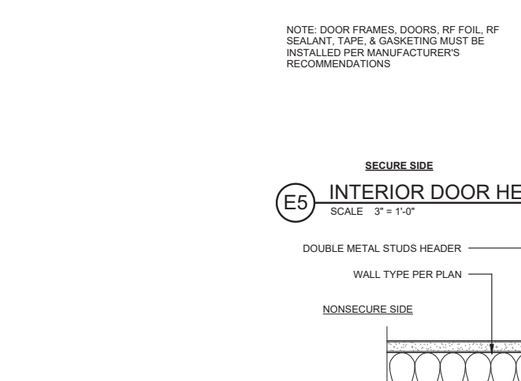

A4 RF DRYWALL CONTROL JOINT_STC 50

SCALE 6" = 1'-0"

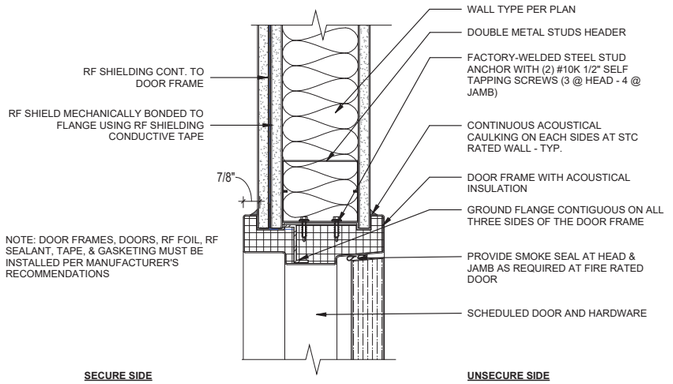

E5 INTERIOR DOOR HEAD/ WITH RF SHIELD

SCALE 3" = 1'-0"

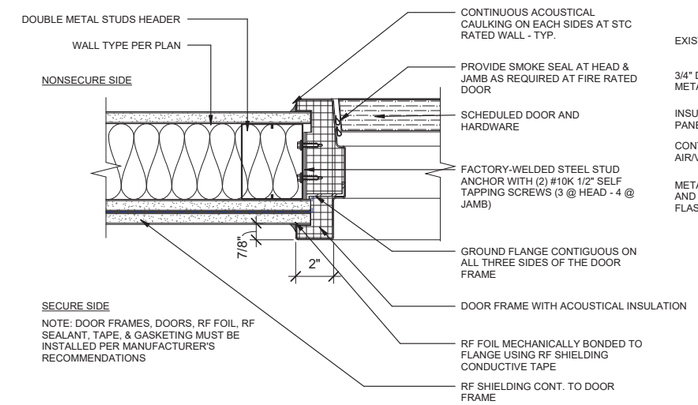

D5 INTERIOR DOOR JAMB/ WITH RF SHIELD

SCALE 3" = 1'-0"

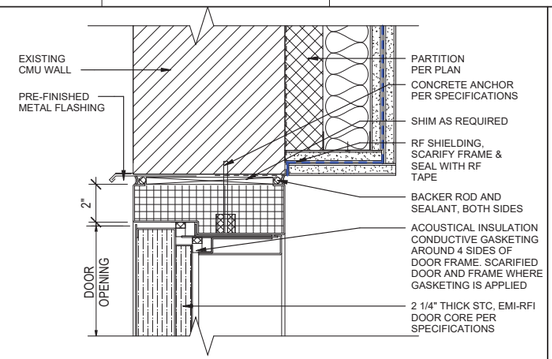

E8 EXT. DOOR HEAD/ JAMB WITH RF SHIELD @ CMU

SCALE 3" = 1'-0"

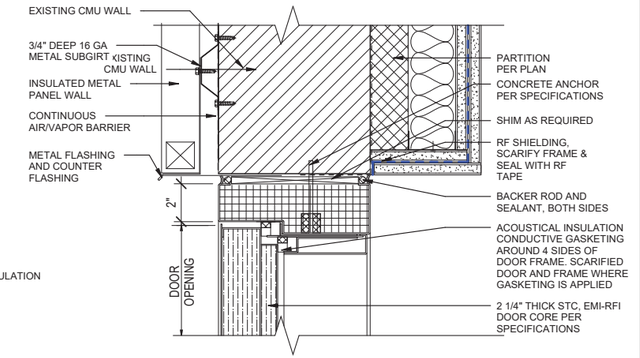

D8 EXT. DOOR HEAD/ JAMB WITH RF SHIELD

SCALE 3" = 1'-0"

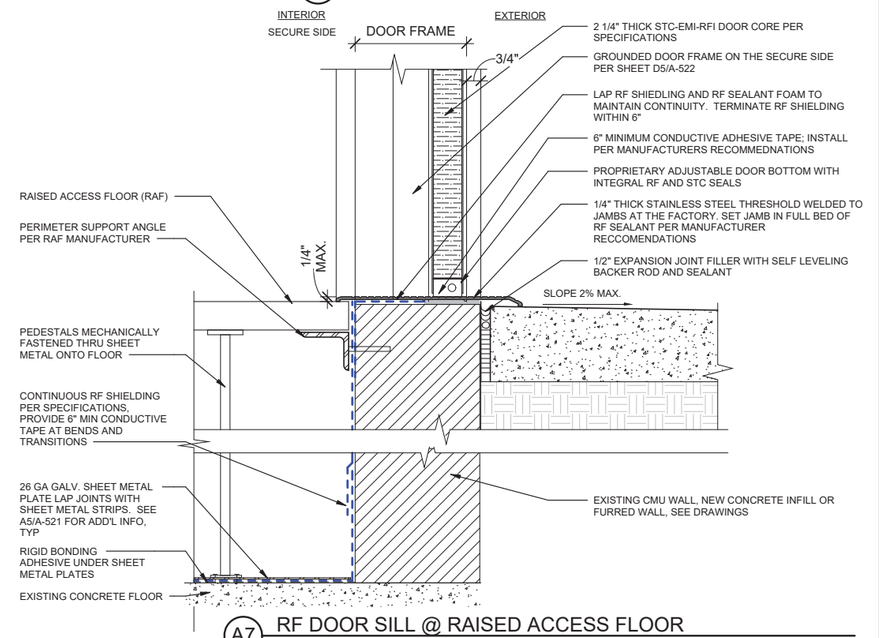

A7 RF DOOR SILL @ RAISED ACCESS FLOOR

SCALE 3" = 1'-0"

LICENSED ARCHITECT
DONALD WINSTEAD
No. ARC.2020029
05-08-26
STATE OF OHIO

MARK	DESCRIPTION	DATE

DESIGNED BY: R. SMITH
DRAWN BY: E. NEWSUM
CHECKED BY: D. WINSTEAD
SUBMITTED BY: D. PEARSON
SIZE: ANSI D
ISSUE DATE: MAY 2026
AMG PROJECT NO.: PBXP222050
CONTRACT NO.: FA8903-21-D-0008
TASK ORDER NO.: W50S8R23F0009

OHIO AIR NATIONAL GUARD
MANSFIELD LAHM AIR NATIONAL GUARD BASE, OH

JACOBS GOVERNMENT SERVICES
2600 MICHELSON SR, STE 500
IRVINE, CA 92812

MANSFIELD LAHM AIR NATIONAL GUARD BASE, OH
REPAIR B403 FOR CYBER
FA877006
ARCHITECTURAL SECURE AREA DETAILS

SHEET ID
A-522

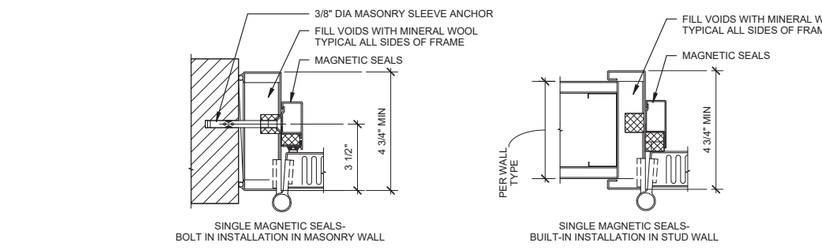

E1 STC DOOR DETAILS
SCALE 3" = 1'-0"

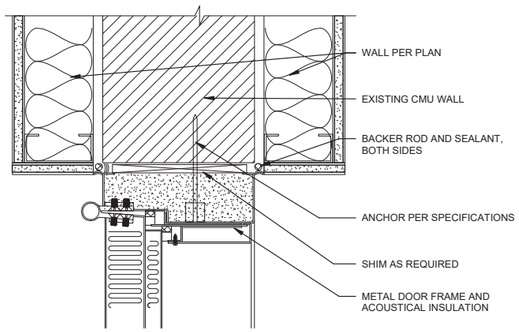

C1 STC 40 DOOR HEAD
SCALE 3" = 1'-0"

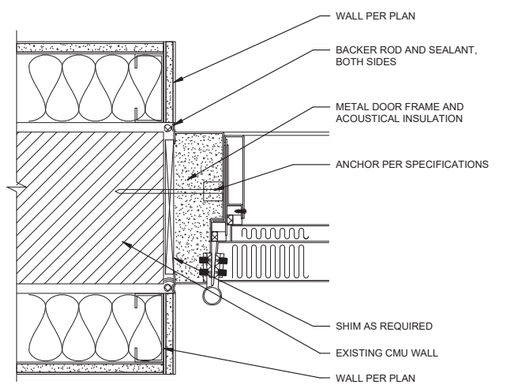

A1 STC 40 DOOR JAMB
SCALE 3" = 1'-0"

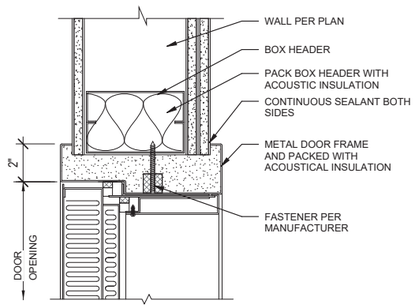

F5 STC 53 DOOR HEAD
SCALE 3" = 1'-0"

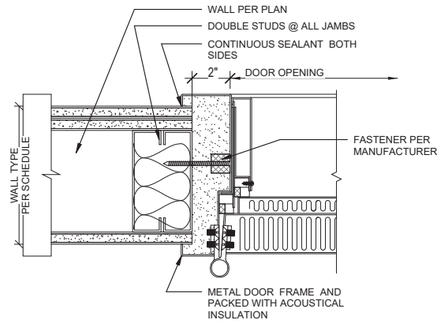

D5 STC 53 DOOR JAMB
SCALE 3" = 1'-0"

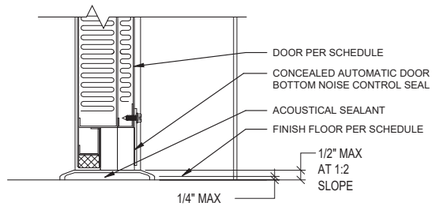

C5 STC DOOR SILL
SCALE 3" = 1'-0"

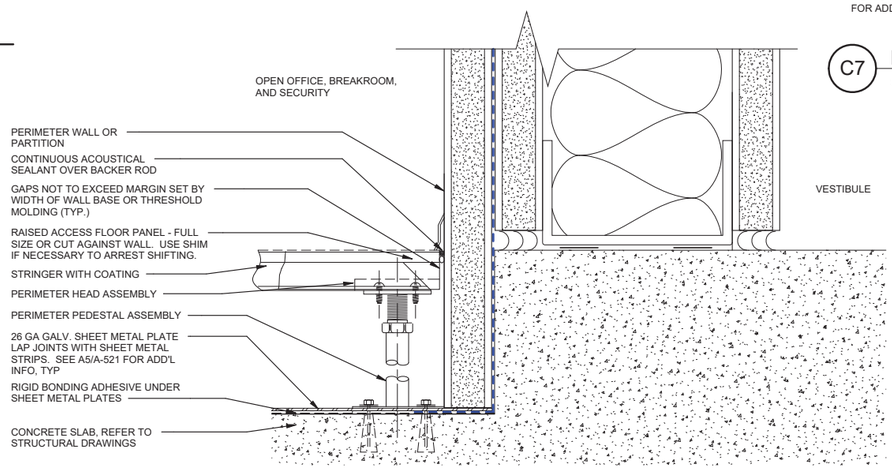

A3 RAISED ACCESS FLOOR @ VESTIBULE
SCALE 12" = 1'-0"

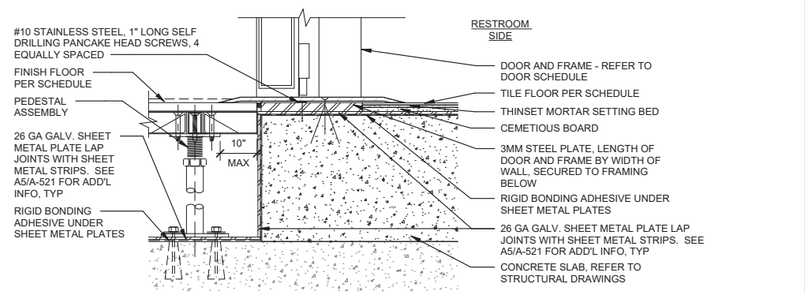

F7 RAISED ACCESS FLOOR @ DOOR SILL RESTROOM
SCALE NTS

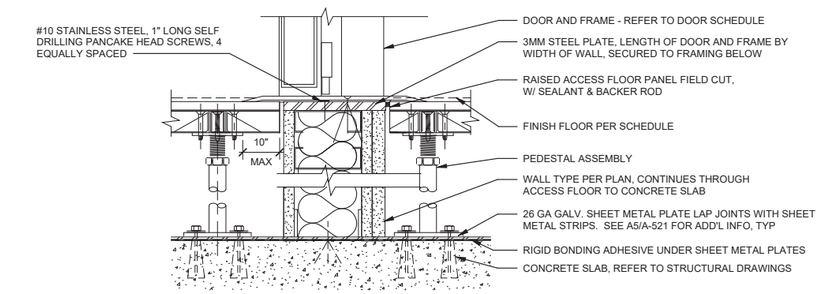

E7 RAISED ACCESS FLOOR @ DOOR SILL
SCALE NTS

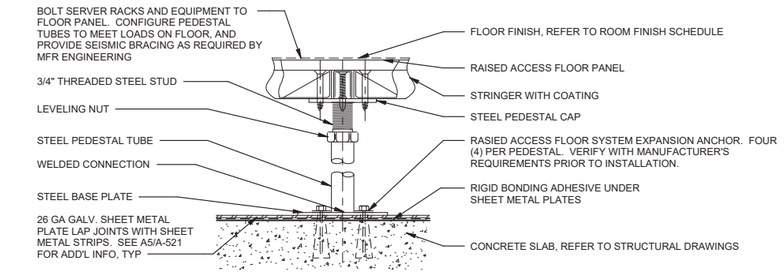

C7 RAISED ACCESS FLOOR TYP. PEDESTAL
SCALE NTS

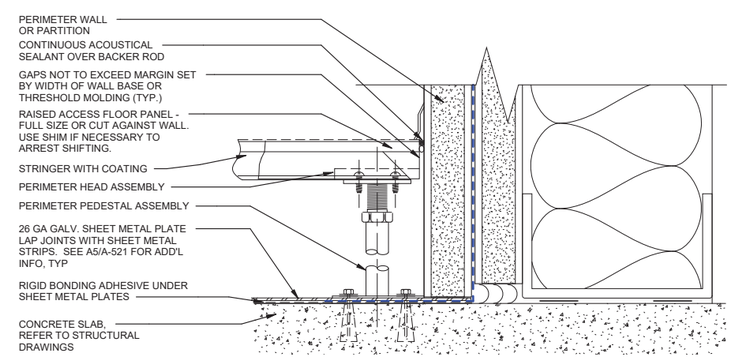

A7 RAISED ACCESS FLOOR @ PERIMETER WALL
SCALE NTS

LICENSED ARCHITECT
DONALD WINSTEAD
No. ARC.2520/029
05-08-26
STATE OF OHIO

MARK	DESCRIPTION	DATE

DESIGNED BY: R. SMITH
DRAWN BY: E. NEWSUM
CHECKED BY: D. WINSTEAD
SUBMITTED BY: D. PEARSON
SIZE: ANSI D

ISSUE DATE: MAY 2026
AMG PROJECT NO.: PBXP222050
CONTRACT NO.: FA8903-21-D-0008
TASK ORDER NO.: W50S8R23F0009

OHIO AIR NATIONAL GUARD
MANSFIELD LAHM AIR NATIONAL GUARD BASE, OH

JACOBS GOVERNMENT SERVICES
2600 MICHELSON SR, STE 500
IRVINE, CA 92612

MANSFIELD LAHM AIR NATIONAL GUARD BASE, OH
REPAIR B403 FOR CYBER
FA877006
ARCHITECTURAL SECURE AREA DETAILS

SHEET ID
A-523

TYPE B-3 FINAL

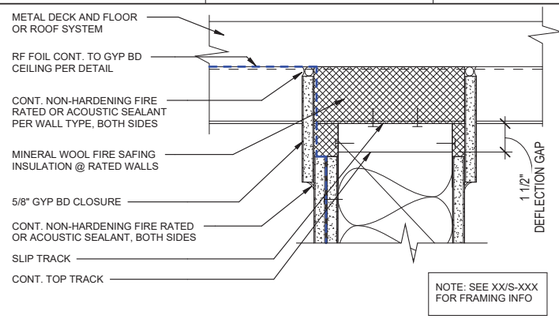

F1 TOP WALL PERPENDICULAR TO MTL DECK
SCALE 3" = 1'-0"

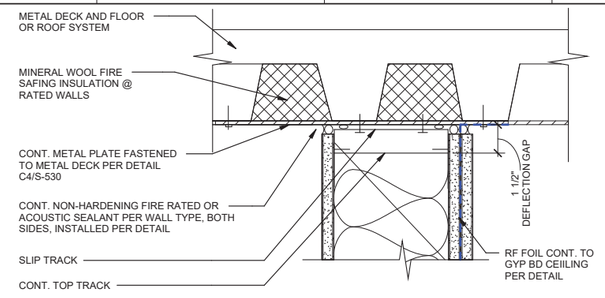

F3 TOP WALL PARALLEL TO MTL DECK
SCALE 3" = 1'-0"

NOTES:
1. SURFACE MOUNT ALL OUTLETS AND CONDUITS ON RF SHIELDED WALLS AND ON ALL STC-RATED WALLS WITHIN SECURED PERIMETER
2. SECURED PERIMETER WALLS MUST HAVE SURFACE MOUNTED OUTLETS AND CONDUITS ON BOTH THE SECURED AND UNSECURED SIDE OF THE WALL.
3. THIS DETAIL IS FOR USE AT STC RATED WALLS OUTSIDE THE SECURED PERIMETER

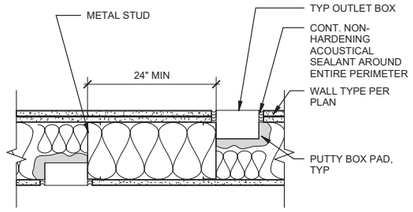

F6 STC RATED OUTLETS
SCALE 1 1/2" = 1'-0"

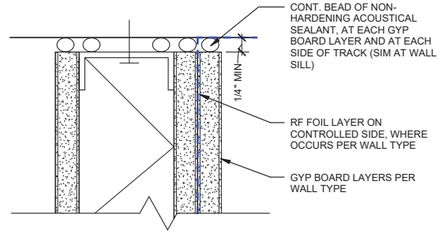

F8 STC WALL TOP TRACK
SCALE 6" = 1'-0"

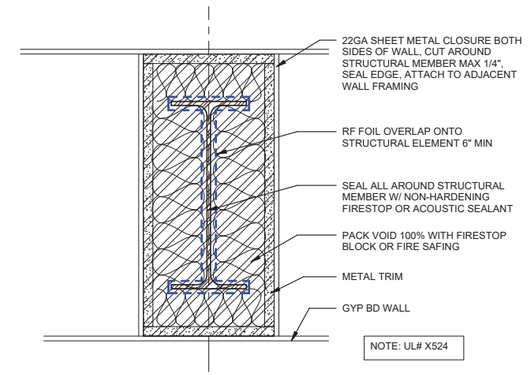

D1 FIRE RATED / STC WALL PENETRATION @ STRUCTURAL ELEMENTS
SCALE 3" = 1'-0"

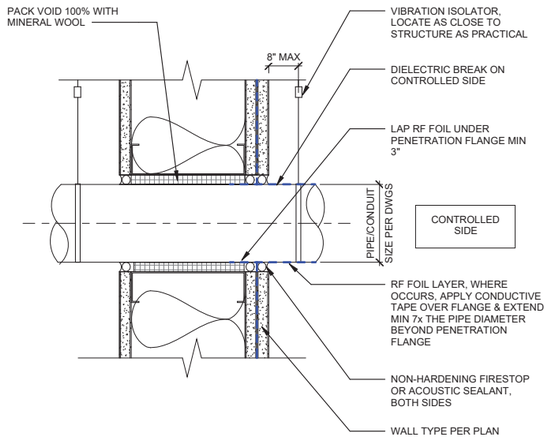

D3 FIRE RATED/ STC PIPE & CONDUIT PENETRATION
SCALE 3" = 1'-0"

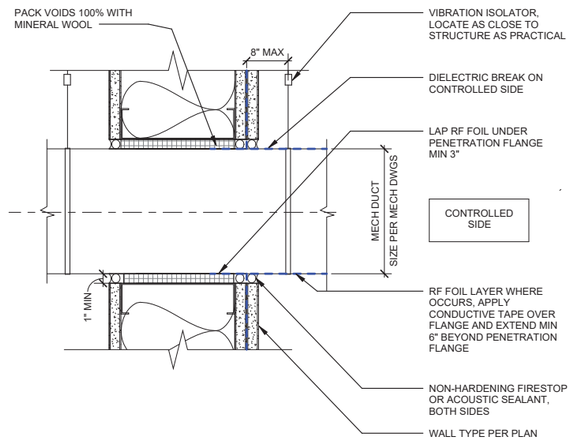

D6 FIRE RATED / STC RATED DUCT PENETRATION
SCALE 3" = 1'-0"

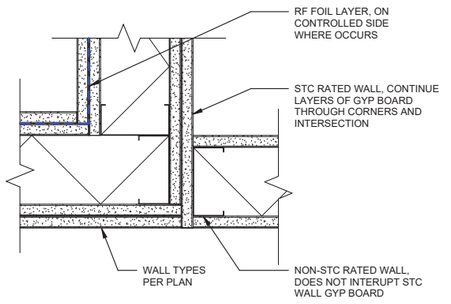

D8 TYP. STC WALL INTERSECTION
SCALE 3" = 1'-0"

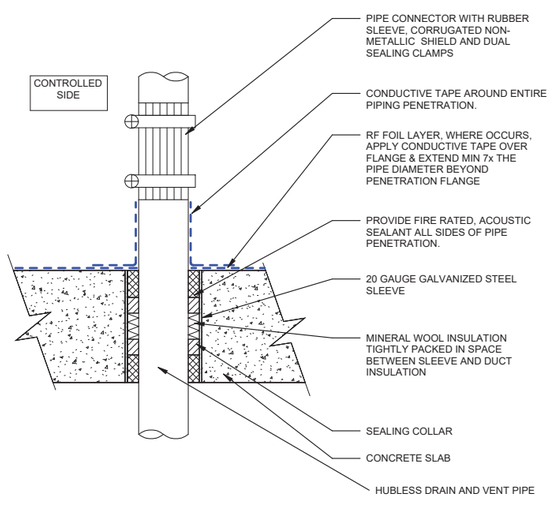

A5 STC/ RF SHIELDED FLOOR SLAB PENETRATION
SCALE 12" = 1'-0"

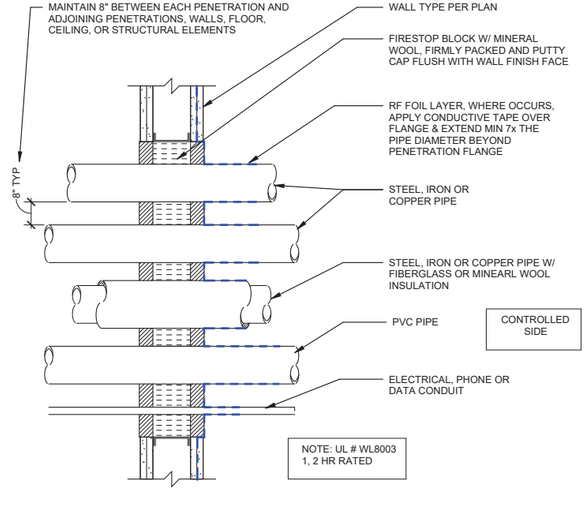

A8 FIRE RATED/ STC MULTIPLE PENETRATIONS
SCALE 12" = 1'-0"

LICENSED ARCHITECT
DONALD WINSTEAD
No. ARC.2020/029
05-08-26
STATE OF OHIO

MARK	DESCRIPTION	DATE

DESIGNED BY: R. SMITH
DRAWN BY: E. NEWSUM
CHECKED BY: D. WINSTEAD
SUBMITTED BY: D. PEARSON
SIZE: ANSI D
ISSUE DATE: MAY 2026
AMG PROJECT NO.: PBXP222050
CONTRACT NO.: FA8903-21-D-0008
TASK ORDER NO.: W50S8R23F0009

OHIO AIR NATIONAL GUARD
MANSFIELD LAHM AIR NATIONAL GUARD BASE, OH

JACOBS GOVERNMENT SERVICES
2800 MICHELSON SR, STE 500
IRVINE, CA 92812

MANSFIELD LAHM AIR NATIONAL GUARD BASE, OH
REPAIR B403 FOR CYBER
FA877006
ARCHITECTURAL SECURE AREA DETAILS

SHEET ID
A-524

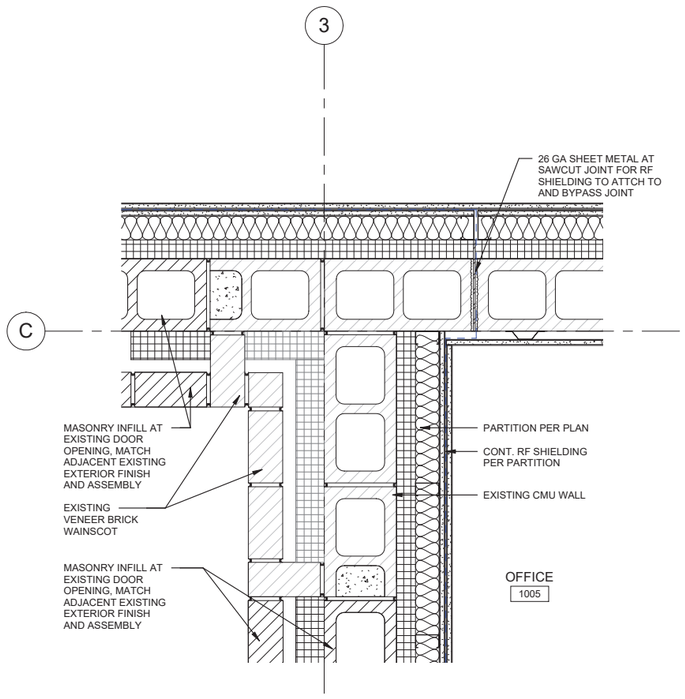

D1 PLAN DETAIL - C3
SCALE 1 1/2" = 1'-0"

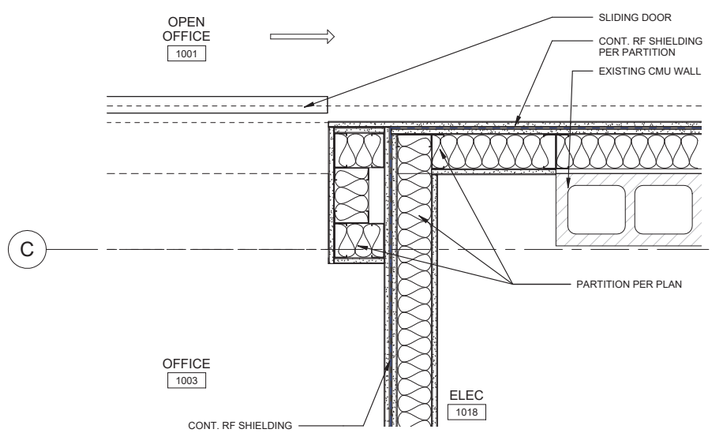

D4 PLAN DETAIL - C1.5
SCALE 1 1/2" = 1'-0"

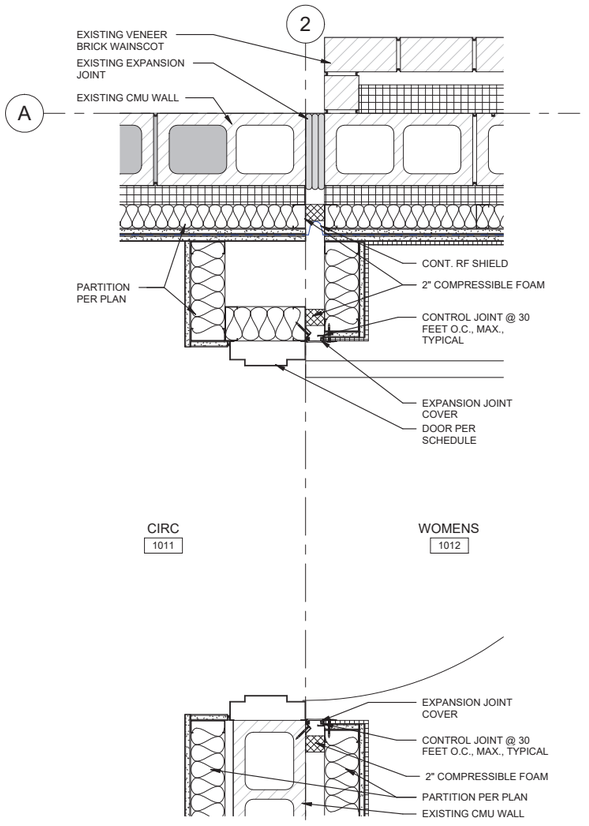

D8 PLAN DETAIL - A2
SCALE 1 1/2" = 1'-0"

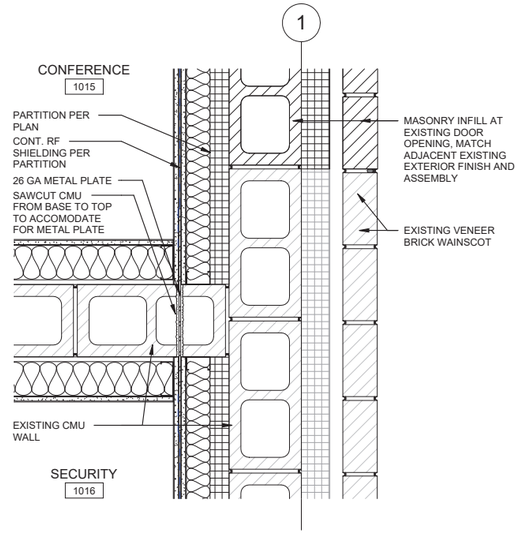

A4 PLAN DETAIL A-B1
SCALE 1 1/2" = 1'-0"

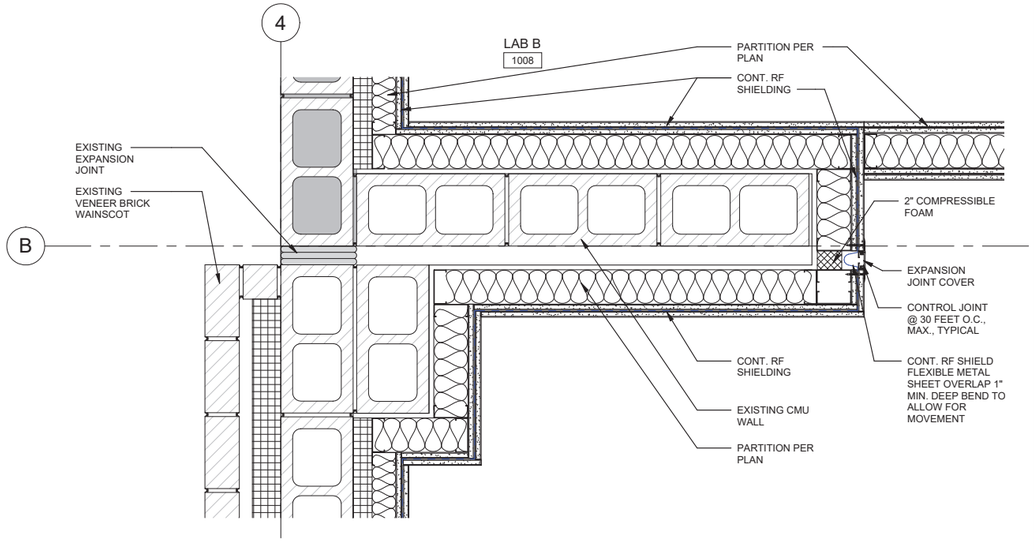

A6 PLAN DETAIL - B4
SCALE 1 1/2" = 1'-0"

LICENSED ARCHITECT
DONALD WINSTEAD
No. ARC.2020029
05-08-26
STATE OF OHIO

MARK	DESCRIPTION	DATE

DESIGNED BY: R. SMITH
DRAWN BY: E. NEWSUM
CHECKED BY: D. WINSTEAD
SUBMITTED BY: D. PEARSON
SIZE: ANSI D
ISSUE DATE: MAY 2026
AMG PROJECT NO.: PBXP222050
CONTRACT NO.: FA8903-21-D-0008
TASK ORDER NO.: W50S8R23F0009

OHIO AIR NATIONAL GUARD
MANSFIELD LAHM AIR NATIONAL GUARD BASE, OH

JACOBS GOVERNMENT SERVICES
2600 MICHELSON SR. STE 500
IRVINE, CA 92612

MANSFIELD LAHM AIR NATIONAL GUARD BASE, OH
REPAIR B403 FOR CYBER
FA877006
ARCHITECTURAL SECURE AREA DETAILS

SHEET ID
A-525

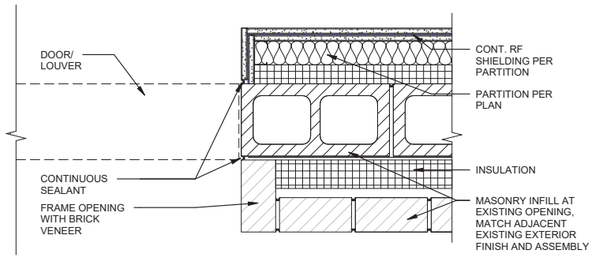

E1 PLAN DETAIL - BRICK @ OPENING
SCALE 1 1/2" = 1'-0"

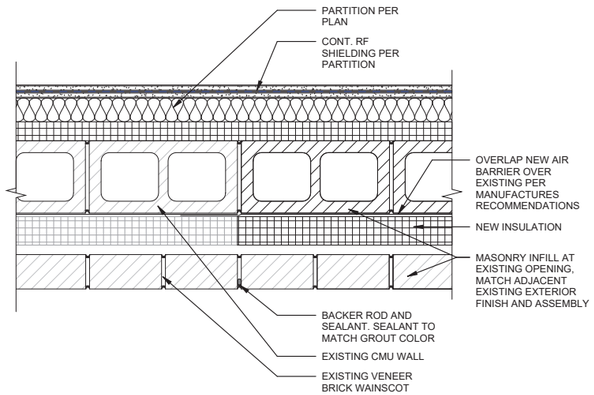

C1 PLAN DETAIL - BRICK INFILL
SCALE 1 1/2" = 1'-0"

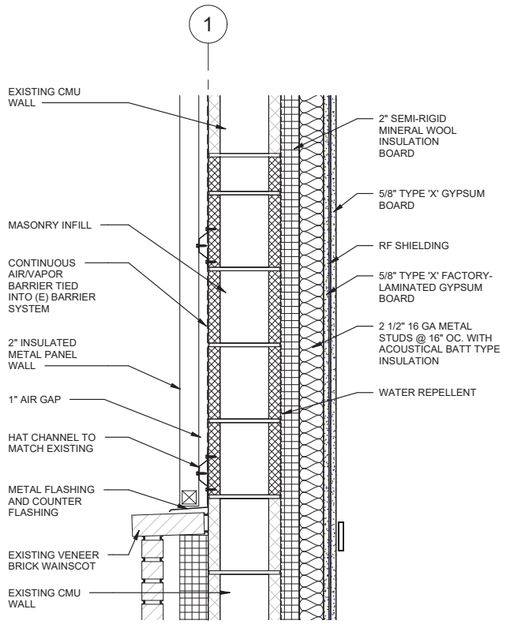

D4 SECTION DETAIL - WALL INFILL
SCALE 1 1/2" = 1'-0"

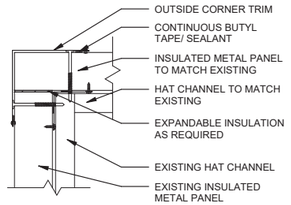

PLAN DETAIL - INSULATED METAL PANEL CORNER
C4 SCALE 3" = 1'-0"

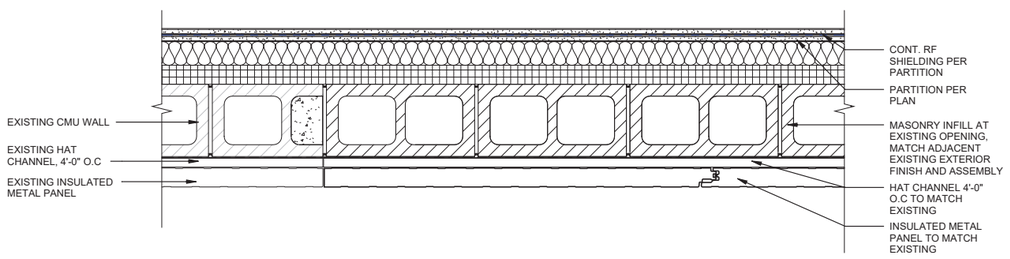

A1 PLAN DETAIL - INSULATED METAL PANEL
SCALE 1 1/2" = 1'-0"

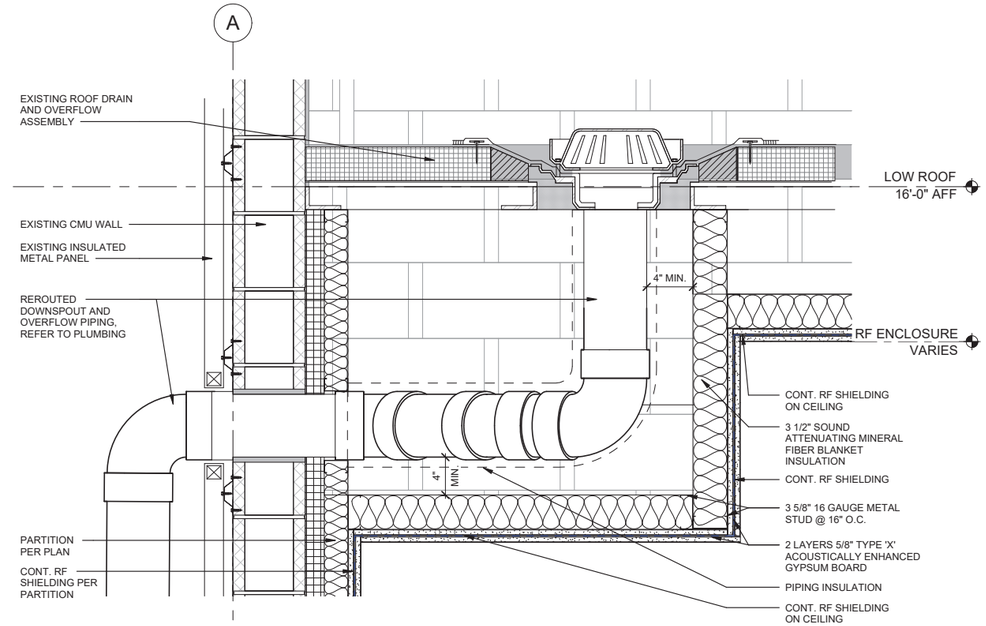

D6 SECTION DETAIL - ROOF DRAIN RF FUR OUT
SCALE 1 1/2" = 1'-0"

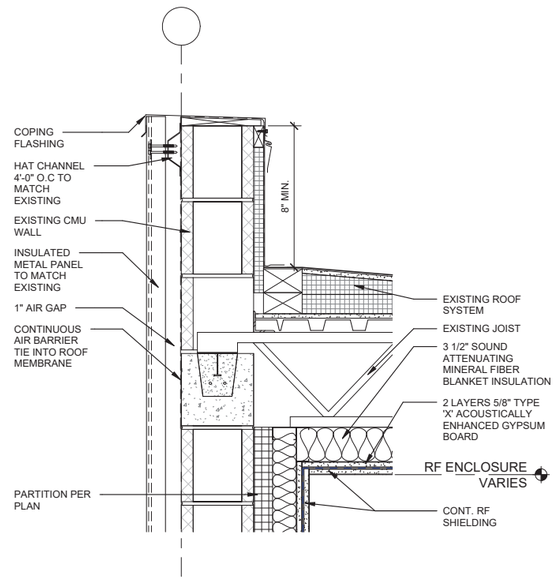

A6 SECTION DETAIL - INSULATED METAL PANEL PARAPET
SCALE 1 1/2" = 1'-0"

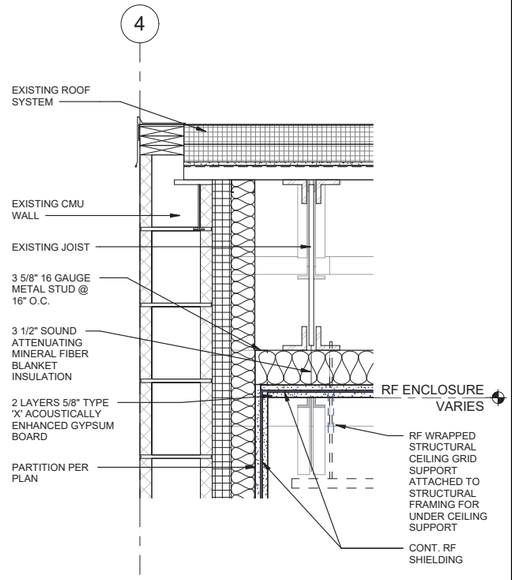

A8 SECTION DETAIL - RF CEILING - WALL
SCALE 1 1/2" = 1'-0"

LICENSED ARCHITECT
DONALD WINSTEAD
No. ARC.2020029
05-08-26
STATE OF OHIO

MARK	DESCRIPTION	DATE

ISSUE DATE: MAY 2026
AMG PROJECT NO.: PBXP222050
CONTRACT NO.: FA8903-21-D-0008
TASK ORDER NO.: W50S8R23F0009

DESIGNED BY: R. SMITH
DRAWN BY: E. NEWSUM
CHECKED BY: D. WINSTEAD
SUBMITTED BY: D. PEARSON
SIZE: ANSI D

OHIO AIR NATIONAL GUARD
MANSFIELD LAHM AIR NATIONAL GUARD BASE, OH

JACOBS GOVERNMENT SERVICES
2600 MICHELSON SR, STE 500
IRVINE, CA 92612

MANSFIELD LAHM AIR NATIONAL GUARD BASE, OH
REPAIR B403 FOR CYBER
FA877006
ARCHITECTURAL SECURE AREA DETAILS

SHEET ID
A-526

TYPE B-3 FINAL

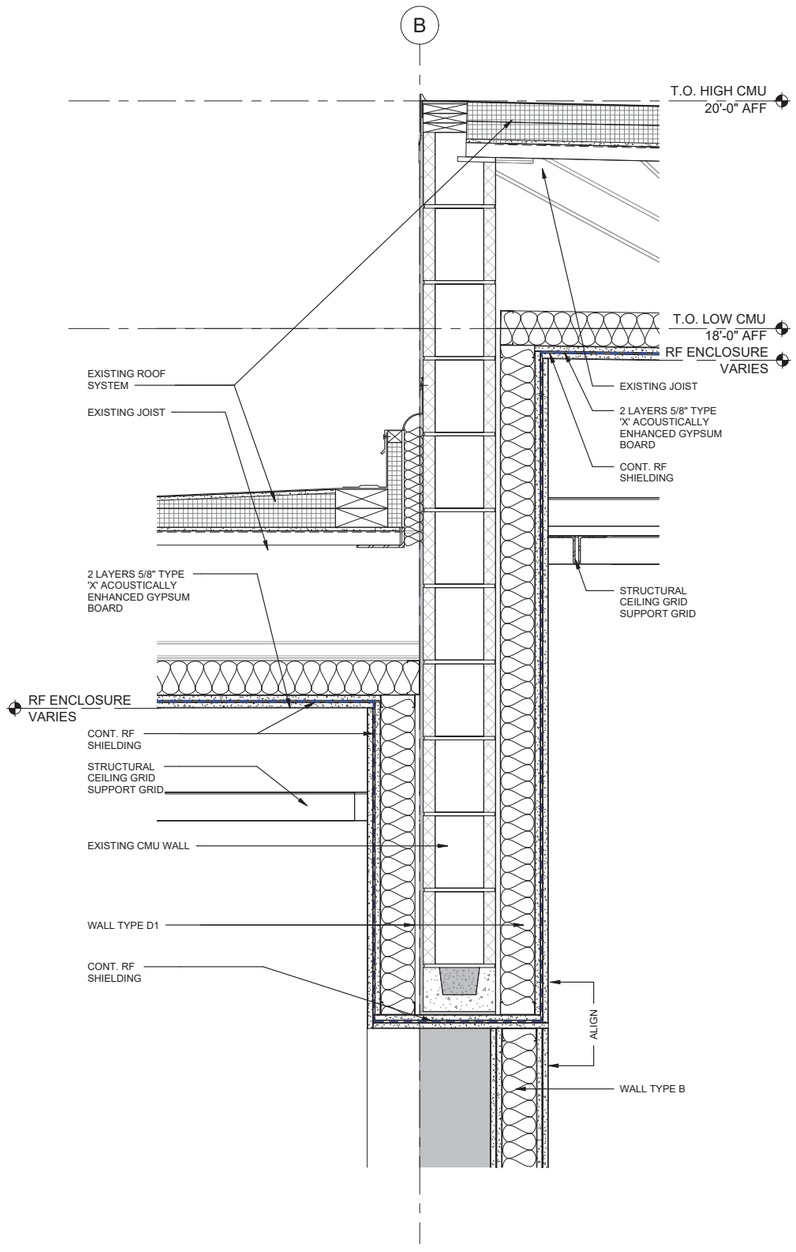

B4 SECTION DETAIL - (E) INTERIOR WALL RF SHIELDING
SCALE 1 1/2" = 1'-0"

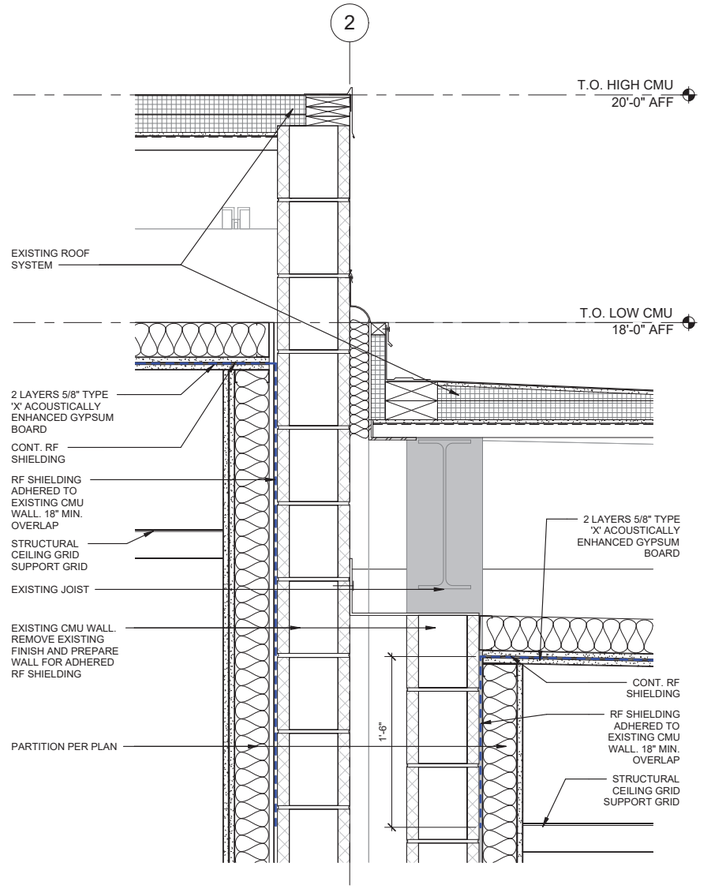

D7 SECTION DETAIL - (E) INTERIOR WALL RF SHIELDING
SCALE 1 1/2" = 1'-0"

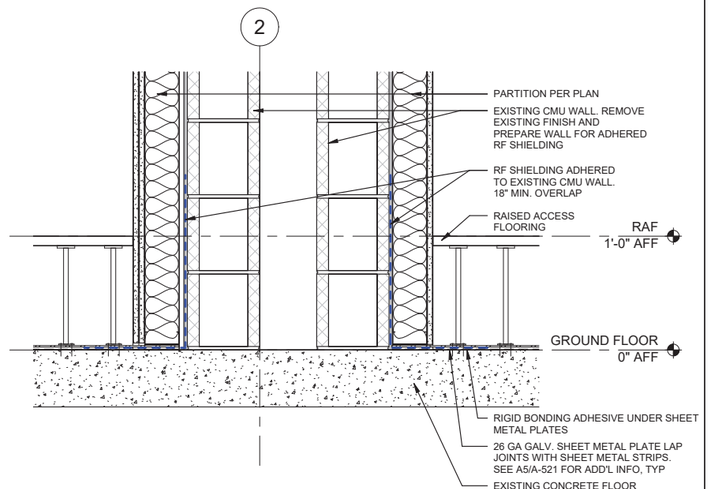

A7 SECTION DETAIL - (E) INTERIOR WALL RF SHIELDING
SCALE 1 1/2" = 1'-0"

LICENSED ARCHITECT
DONALD WINSTEAD
No. ARC.2020029
05-08-26
STATE OF OHIO

MARK	DESCRIPTION	DATE

DESIGNED BY: R. SMITH
DRAWN BY: E. NEWSUM
CHECKED BY: D. WINSTEAD
SUBMITTED BY: D. PEARSON
SIZE: ANSI D
ISSUE DATE: MAY 2026
AMG PROJECT NO.: PBXP222050
CONTRACT NO.: FA8903-21-D-0008
TASK ORDER NO.: W50S8R23F0009

OHIO AIR NATIONAL GUARD
MANSFIELD LAHM AIR NATIONAL GUARD BASE, OH

JACOBS GOVERNMENT SERVICES
2600 MICHELSON SR. STE 500
IRVINE, CA 92812

MANSFIELD LAHM AIR NATIONAL GUARD BASE, OH
REPAIR B403 FOR CYBER
FA877006
ARCHITECTURAL SECURE AREA DETAILS

SHEET ID
A-527

DOOR SCHEDULE

MARK	DOOR WIDTH	DOOR HEIGHT	DOOR THICK	DOOR TYPE	DOOR MATERIAL	DOOR FINISH	FRAME TYPE	FRAME MATERIAL	FRAME FINISH	DETAILS HEAD	DETAILS JAMB	DETAILS SILL	GLAZING	FIRE RATING	STC	RF	HARDWARE	REMARKS
1000A	3'-0"	8'-2"	1 3/4"	F	HM	PNT	A	HM	PNT	C8/A-501	C8/A-501	A8/A-501					1	3
1000B	3'-0"	8'-2"	1 3/4"	F	HM	PNT	A	HM	PNT	E5/A-522	D5/A-522	A7/A-522			53	X	10	2,4,8
1003	4'-0"	8'-2"	1 3/4"	SL	AL	FF	D	AL	FF	D7/A-504	B5/A-504	A7/A-504	GL-1		39		8	6,16
1004	4'-0"	8'-2"	1 3/4"	SL	AL	FF	D	AL	FF	D7/A-504	B5/A-504	A7/A-504	GL-1		39		8	6,16
1005	4'-0"	8'-2"	1 3/4"	SL	AL	FF	D	AL	FF	D7/A-504	B5/A-504	A7/A-504	GL-1		39		8	6,16
1006A	3'-6"	8'-2"	1 3/4"	F	HM	PNT	B	HM	PNT	F9/A-504	D9/A-504	E7/A-523			40		3	2
1006B	8'-0"	8'-2"	1 3/4"	F2	HM	PNT	C	HM	PNT	D8/A-522	D8/A-522	A7/A-522			53	X	2	1
1007	3'-8"	8'-2"	1 3/4"	F	HM	PNT	B	HM	PNT	F5/A-523	D5/A-523	C5/A-523		45-MIN	53		4	2
1008	3'-8"	8'-2"	1 3/4"	F	HM	PNT	B	HM	PNT	F5/A-523	D5/A-523	C5/A-523		45-MIN	53		4	2
1009	3'-8"	8'-2"	1 3/4"	F	HM	PNT	B	HM	PNT	F5/A-523	D5/A-522	C5/A-523		45-MIN	53		4	2
1011	3'-0"	8'-2"	1 3/4"	F	HM	PNT	A	HM	PNT	E8/A-522	E8/A-522	A7/A-522			53	X	9	1,8
1012	3'-0"	8'-2"	1 3/4"	F	HM	PNT	A	HM	PNT	F5/A-504	F5/A-504	F7/A-532					6	
1013	3'-0"	8'-2"	1 3/4"	F	HM	PNT	A	HM	PNT	F5/A-504	F5/A-504	F7/A-532					6	
1014	3'-0"	8'-2"	1 3/4"	F	HM	PNT	A	HM	PNT	C1/A-523	A1/A-523	C5/A-523			40		5	6
1015	3'-0"	8'-2"	1 3/4"	F	HM	PNT	A	HM	PNT	C1/A-523	A1/A-523	C5/A-523			40		5	6
1016	4'-0"	8'-2"	1 3/4"	SL	AL	FF	D	AL	FF	D7/A-504	B5/A-504	A7/A-504	-		39		7	2,16
1017	3'-0"	7'-0"	1 3/4"	-	(E)	(E)	(E)	(E)	(E)	(E)	(E)	(E)						EXISTING DOOR, NO MODIFICATIONS
1018	3'-0"	7'-0"	1 3/4"	-	(E)	(E)	(E)	(E)	(E)	(E)	(E)	(E)						EXISTING DOOR, NO MODIFICATIONS
MECH 1	6'-1"	7'-4"	3"	-								-						MECHANICAL YARD GATE
MECH 2	8'-1"	7'-4"	3"	-														MECHANICAL YARD GATE
MECH 4	1'-2"	1'-2"		EE														
MECH 5	2'-0"	2'-0"		FF														
MECH 6	2'-0"	2'-0"		FF														

SCHEDULE COMMENTS

1. EXIT ONLY, ALARMED, NO EXTERIOR HARDWARE
2. CARD READER AND SCRAMBLE KEYPAD
3. CARD READER ONLY
4. FF-L-2890C TYPE 1 AND X10
5. PANIC HARDWARE
6. KEYED LOCK
7. PUSH/PULL HARDWARE
8. RF SHIELDED
9. CYPHER PUSH BUTTON LOCK WITH UL437 DEADBOLT
10. BALANCED MAGNETIC SWITCH
11. LOCAL ANNUNCIATOR
12. CARD READ LOCKOUT
13. FF-L-2890C TYPE X, EXIT ONLY, PANIC HARDWARE
14. FF-L-2800C TYPE IV AND X10, PANIC HARDWARE
15. SMOKE SEAL
16. SLIDING

ABBREVIATIONS	
ALUM	ALUMINUM
AN	ANODIZED
FF	FACTORY FINISH
FIN	FINISH
FRP	FIBER REINFORCED PLASTIC
GALV	GALVANIZED
GL	GLASS
HDWR	HARDWARE
HM	HOLLOW METAL
PT	PAINTED
STC	SOUND TRANSMISSION CLASS RATING
STL	STEEL

GENERAL SHEET NOTES

A. DOOR PANEL THICKNESS IS 1-3/4" UON OR REQUIRED FOR RF/STC DOORS.

B. ALL STC SPECIFIC RATED DOOR ASSEMBLIES MUST BE TESTED POST INSTALLATION TO MEET THE SOUND TRANSMISSION COEFFICIENT (STC) AS NOTED ON THE DOOR SCHEDULE. TEST FAILURE, REPAIR, OR REPLACEMENT COSTS WILL BE AT THE CONTRACTORS EXPENSE.

C. ALL DOORS AND FRAMES TO BE PRE-MANUFACTURED AND TESTED AS AN ASSEMBLY FOR STC AND RF RATED DOORS.

D. REFER TO SPECIFICATION SECTION 08 71 00 FOR DOOR HARDWARE SETS.

E. ALL SECURED PERIMETER DOORS MUST BE DELIVERS AS AN ENTIRE SYSTEM, WITH THRESHOLD, LOCK, AND STRIKE HARDWARE MOUNTED, AND WITH HOLES FOR EXTERNALLY MOUNTED UL 634 LEVEL II HIGH SECURITY SWITCH, AND TESTED TO THEIR SOUND CLASS AS AN ASSEMBLY USING ASTM E90 AND VERIFIED AFTER INSTALLATION IN THE FIELD WITH ASTM E336 AND VALIDATED BY THE AO AND SSO VERBAL TEST.

F. ALL SECURED PERIMETER AREAS MUST MEET A MINIMUM OF SOUND GROUP 4 (STC 50) AFTER INSTALLATION IN THE FIELD, CONFIRMED BY ASTM E336 AND VALIDATED BY THE AO AND SSO VERBAL TEST.

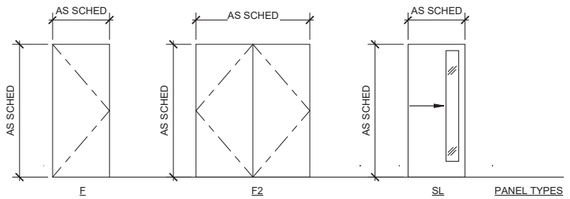

F

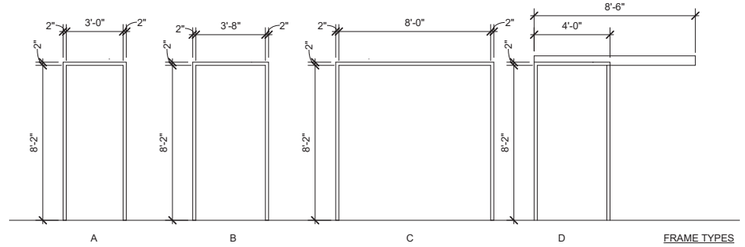

LICENSED ARCHITECT
DONALD WINSTEAD
No. ARC.2020029
05-08-26
STATE OF OHIO

MARK	DESCRIPTION	DATE

ISSUE DATE: MAY 2026
AMG PROJECT NO.: PBXP222050
CONTRACT NO.: FA8903-21-D-0008
TASK ORDER NO.: W50S8R23F0009

DESIGNED BY: R. SMITH
DRAWN BY: E. NEWSUM
CHECKED BY: D. WINSTEAD
SUBMITTED BY: D. PEARSON
SIZE: ANSI D

OHIO AIR NATIONAL GUARD
MANSFIELD LAHM AIR NATIONAL GUARD BASE, OH

JACOBS GOVERNMENT SERVICES
2800 MICHELSON SR, STE 500
IRVINE, CA 92812

MANSFIELD LAHM AIR NATIONAL GUARD BASE, OH
REPAIR B403 FOR CYBER
FA877006
ARCHITECTURAL DOOR SCHEDULE

SHEET ID

A-601

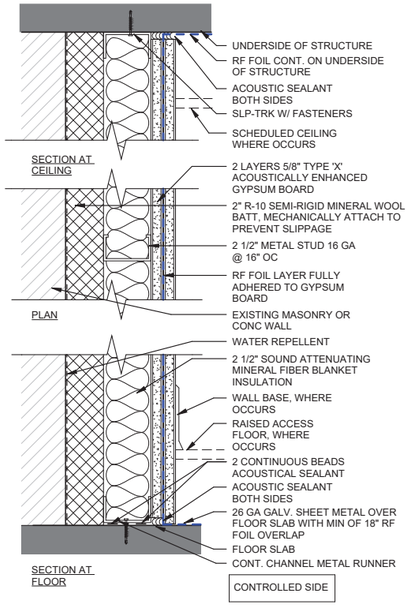

E	AS SHOWN (STC 52) (RAL-TL07-148)(U465), RF SHIELD
E1	(1) 5/8" GYPSUM BOARD + RF SHIELD + (1) 5/8" CEMENT BOARD AND WALL TILE TO TOP OF CEILING PER ELEVATIONS ON ONE SIDE
E2	(1) 5/8" GYPSUM BOARD

D1 WALL TYPE E
SCALE 3" = 1'-0"

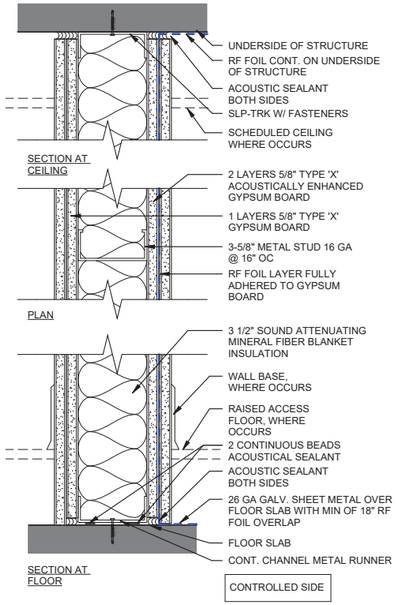

D	AS SHOWN (STC 50) (U465), RF SHIELD
D1	(2) 5/8" TYPE 'X' ACOUSTICALLY ENHANCED GYPSUM BOARD BETWEEN RF SHIELD ON ONE SIDE, 1/2" AIRGAP ON OTHER SIDE AGAINST (E) WALL

D3 WALL TYPE D
SCALE 3" = 1'-0"

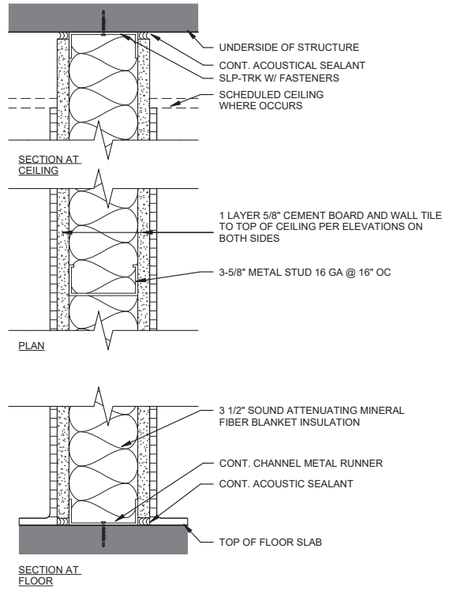

C	AS SHOWN
C1	(1) 5/8" CEMENT BOARD AND WALL TILE TO TOP OF CEILING PER ELEVATIONS ON ONE SIDE
C2	(1) 5/8" CEMENT BOARD AND WALL TILE TO TOP OF CEILING PER ELEVATIONS ON ONE SIDE & (2) 5/8" GYPSUM BOARD ON OTHER SIDE, (STC 52) (RAL-TL07-148)(U465)
C3	(1) 5/8" CEMENT BOARD AND WALL TILE TO TOP OF CEILING PER ELEVATIONS ON ONE SIDE. PROVIDE 1/2" AIRGAP AGAINST (E) WALL
C4	(1) 5/8" CEMENT BOARD AND WALL TILE TO TOP OF CEILING PER ELEVATIONS ON ONE SIDE & (1) 5/8" GYPSUM BOARD ON OTHER SIDE, 6" METAL STUD
C5	(1) 5/8" CEMENT BOARD AND WALL TILE TO TOP OF CEILING PER ELEVATIONS ON ONE SIDE, 6" METAL STUD

D5 WALL TYPE C
SCALE 3" = 1'-0"

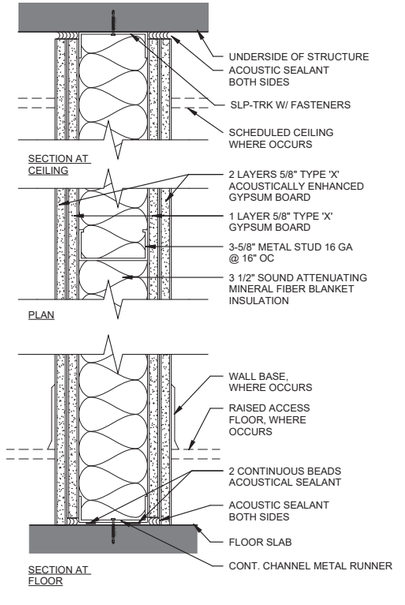

B	AS SHOWN (STC 50) (NGC 2016048)

D7 WALL TYPE B
SCALE 3" = 1'-0"

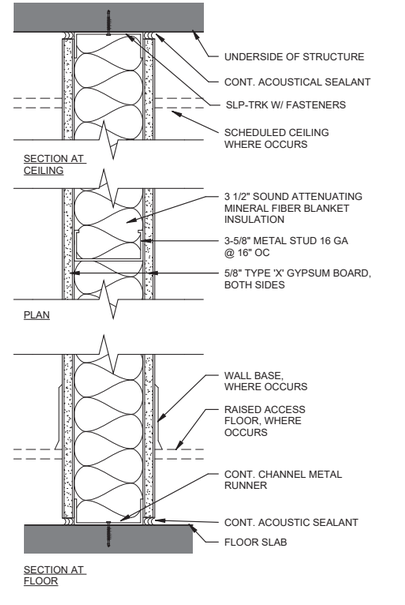

A	AS SHOWN
A1	(1) 5/8" GYPSUM BOARD ON ONE SIDE
A2	(1) 5/8" GYPSUM BOARD ON ONE SIDE, 2 1/2" METAL STUD
A3	(1) 5/8" CEMENT BOARD ON ONE SIDE, 4" METAL STUD
A4	(1) 5/8" GYPSUM BOARD ON ONE SIDE, 1/2" AIRGAP AGAINST (E) WALL
A5	(1) 5/8" TYPE 'X' ACOUSTICALLY ENHANCED GYPSUM BOARD (1) 5/8" GYPSUM BOARD ONE SIDE, 1/2" AIRGAP AGAINST (E) WALL

D9 WALL TYPE A
SCALE 3" = 1'-0"

6 4 2 0 6
SCALE: 3"=1'-0"

LICENSED ARCHITECT
DONALD WINSTEAD
No. ARC.2020029
05-08-26
STATE OF OHIO

MARK	DESCRIPTION	DATE

DESIGNED BY: R. SMITH
DRAWN BY: E. NEWSUM
CHECKED BY: D. WINSTEAD
SUBMITTED BY: D. PEARSON
SIZE: ANSI D
ISSUE DATE: MAY 2026
AMG PROJECT NO.: PBXP222050
CONTRACT NO.: FA8903-21-D-0008
TASK ORDER NO.: W50S8R23F0009

OHIO AIR NATIONAL GUARD
MANSFIELD LAHM AIR NATIONAL GUARD BASE, OH

JACOBS GOVERNMENT SERVICES
2600 MICHELSON SR. STE 500
IRVINE, CA 92812

MANSFIELD LAHM AIR NATIONAL GUARD BASE, OH
REPAIR B403 FOR CYBER
FA877006
ARCHITECTURAL WALL TYPES SCHEDULE

SHEET ID
A-701

DRAWNING SYMBOLS

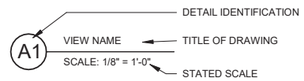

DETAIL IDENTIFICATION
TITLE OF DRAWING
STATED SCALE

PLAN NORTH ARROW
TRUE NORTH ARROW

INTERIOR ELEVATION
MULTIPLE VIEWS

WALL SECTION

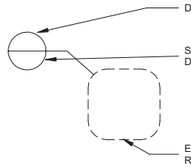

DETAIL IDENTIFICATION
SHEET ON WHICH DETAIL IS DRAWN
ENLARGED PLAN/DETAIL REFERENCE

ROOM NAME AND NUMBER

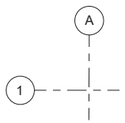

COLUMN CENTERLINE

REVISION

NOTES BY SYMBOL
(KEYNOTES)

SIGNAGE TAG

SIGN NUMBER

FURNITURE SYMBOL
FURNISHING ITEM
FURNISHING CATEGORY

DATUM MARKER

GENERAL SHEET NOTES

A. WHERE COLOR IS SHOWN AS BEING SPECIFIC TO ONE MANUFACTURER AN EQUIVALENT COLOR BY ANOTHER MANUFACTURER MAY BE SUBMITTED FOR APPROVAL. MANUFACTURERES AND MATERIALS SPECIFIED ARE NOT INTENDED TO LIMIT THE SELECTIONS OF EQUAL COLOR FROM OTHER MANUFACURERS. PAINT COLOR SELECTIONS ARE BASE STANDARD AND MUST BE REVIEWED AND APPROVED BY BASE FACILITY MANAGER IF CHANGES ARE REQUIRED.

B. REVIEW DOCUMENTS, VERIFY DIMENSIONS AND FIELD CONDITIONS, AND CONFIRM THAT WORK IS BUILDABLE AS SHOWN. REPORT ANY CONFLICT OR OMISSIONS TO THE GOVERNMENT FOR CLARIFICATION PRIOR TO PERFORMING ANY WORK IN QUESTION.

C. ALL FINISHES ARE TO BE INSTALLED/APPLIED IN ACCORDANCE WITH THE MANUFACTURER'S WRITTEN INSTRUCTIONS.

D. ALL FLOORING TRANSITIONS ARE TO OCCUR IN THE CENTERLINE OF THE DOOR, DOORWAY, OR CEILING U.O.N.

E. WHEN INSTALLING TILE, USE ALL APPLICABLE MATCHING TRIM PIECES, I.E. INSIDE AND OUTSIDE CORNERS AND EDGES. LEAVE NO EXPOSED TILE EDGES.

F. REFER TO ROOM FINISH SCHEDULE AND FINISH MATERIAL LEGEND ON SHEET IN601 FOR FINISH SELECTIONS IN EACH ROOM.

G. FLOORING MATERIAL / FINISH SPECIFIED FOR EACH AREA MUST EXTEND UNDERNEATH ALL EQUIPMENT AND CASEWORK U.O.N.

H. ALL VERTICAL SURFACES TO RECEIVE BASE U.O.N.

I. ACCENT PAINT COLOR WILL RUN CORNER TO CORNER AND FLOOR TO CEILING WHERE INDICATED.

J. PAINT ALL ACCESS PANELS TO MATCH ADJACENT SURFACE.

K. SEE INTERIOR DETAIL SHEET IN501 FOR FLOORING TRANSITION DETAILS.

L. SEE INTERIOR ELEVATIONS FOR WALL TILE PATTERNS.

M. REFERENCE IN101 FOR FINISH FLOOR PLAN.

N. ALL OPEN CEILINGS ARE TO BE PAINTED GYP-1 UNLESS OTHERWISE INDICATED. IN OPEN SPACES CEILING COLOR WILL STOP ON ADJACENT WALLS AT 10'-6" A.F.F.

LEGEND

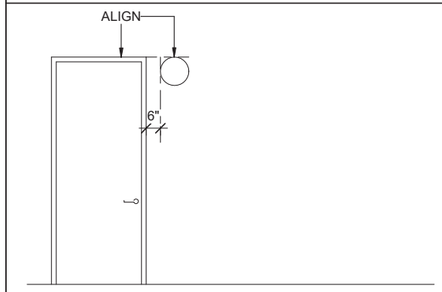

STANDARD WALL CLOCK (AT DOOR)

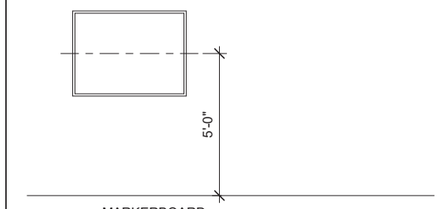

MARKERBOARD

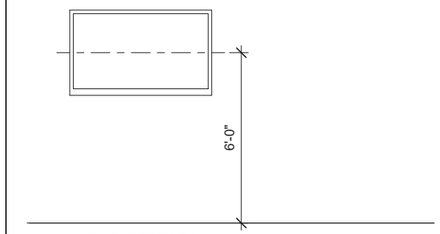

FLATSCREEN TV

LICENSED ARCHITECT
DONALD WINSTEAD
No. ARC.2020039
05-08-26
STATE OF OHIO

MARK	DESCRIPTION	DATE
1	Revision 1	Date 1

DESIGNED BY: M. WARRINER
DRAWN BY: M. WALTERS
CHECKED BY: B. ERNSTING
SUBMITTED BY: D. PEARSON
SIZE: ANSI D

ISSUE DATE: MAY 2026
ANG PROJECT NO.: PBXP222050
CONTRACT NO.: FA8903-21-D-0008
TASK ORDER NO.: W50S8R23F0009

OHIO AIR NATIONAL GUARD
MANSFIELD LAHM AIR NATIONAL GUARD BASE, OH

JACOBS GOVERNMENT SERVICES
2600 MICHELSON SR, STE 500
IRVINE, CA 92612

MANSFIELD LAHM AIR NATIONAL GUARD BASE, OH
REPAIR B403 FOR CYBER
FA877006
INTERIORS GENERAL NOTES, SYMBOLS, AND ABBREVIATIONS

SHEET ID

I-001

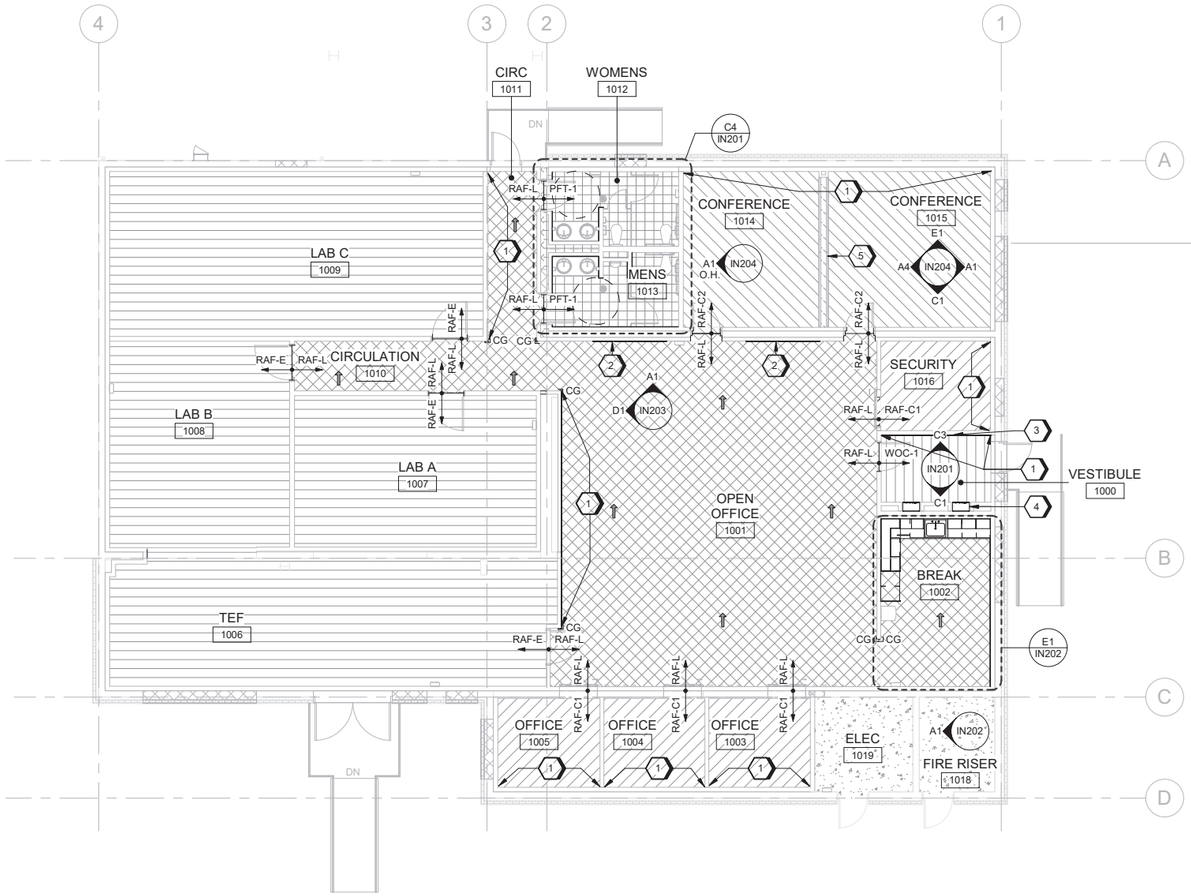

A1 INTERIOR FINISH FLOOR PLAN
SCALE 1/8" = 1'-0"

GENERAL SHEET NOTES

A. REFER TO SHEET IN602 FOR FINISH MATERIAL LEGEND.

B. REFER TO SHEET IN601 FOR ROOM FINISH SCHEDULE.

C. REFER TO ARCHITECTURE FOR REFLECTED CEILING PLAN.

D. REFER TO SHEET IN201 - IN202 FOR INTERIOR ELEVATIONS.

E. WHERE COLOR IS SHOWN AS BEING SPECIFIC TO ONE MANUFACTURER MAY BE SUBMITTED FOR APPROVAL. MANUFACTURERES AND MATERIALS SPECIFIED ARE NOT INTENDED TO LIMIT THE SELECTIONS OF EQUAL COLOR FROM OTHER MANUFACTURERS.

F. COORDINATE THERMOSTAT LOCATIONS WITH MECHANICAL DRAWINGS AND CONSTRUCTION MANAGER. INSTALL THERMOSTATS NEAR A CORNER OF A ROOM OR BY LIGHT SWICHES. DO NOT INSTALL THERMOSTATS IN THE CENTER OF A WALL.

G. TRANSITIONS MUST MEET ABA GUIDELINES.

H. TRANSITIONS OCCURING UNDER DOORS MUST BE CENTERED UNDER DOOR.

(#) SHEET KEYNOTES

1. PT-2 ACCENT PAINT.
2. GROUPING OF AWP-1A, AWP-1B, AND AWP-1C ACOUSTIC WALL PANELS.
3. AWP-2 ACOUSTIC WALL PANEL SYSTEM.
4. CONFIRM WIDTH OF OPENING WITH CHARGING CELL PHONE LOCKER.
5. OPERABLE PARTITION WITH ACOUSTIC WALL COVERING OPR-1. REFER TO ARCHITECTURE.

LEGEND

- PFT-1 PORCELAIN FLOOR TILE
- RAF-C1 RAISED ACCESS FLOOR WITH CARPET TILE
- RAF-C2 RAISED ACCESS FLOOR WITH ACCENT CARPET TILE
- RAF-E RAISED ACCESS FLOOR WITH ELECTROSTATIC DISSIPATIVE FLOORING
- RAF-L RAISED ACCESS FLOOR WITH LUXURY VINYL TILE
- SC-1 SEALED CONCRETE
- WOC-1 WALK OFF CARPET
- CG — CORNER GUARD
- FLOORING DIRECTION

GRAPHIC SCALE(S)

0 4' 8' 16' 24'
SCALE: 1/8" = 1'-0"

PLAN NORTH

LICENSED ARCHITECT
DONALD WINSTEAD
No. ARC.2020028
05-08-26
STATE OF OHIO

MARK	DESCRIPTION	DATE

ISSUE DATE: MAY 2026
ANG PROJECT NO.: PBXP222050
CONTRACT NO.: FA8903-21-D-0008
TASK ORDER NO.: W50S8R23F0009

DESIGNED BY: M. WARRINER
DRAWN BY: M. WALTERS
CHECKED BY: B. ERNSTING
SUBMITTED BY: D. PEARSON
QA/QC: ANSLD

OHIO AIR NATIONAL GUARD
MANSFIELD LAHM AIR NATIONAL GUARD BASE, OH

JACOBS GOVERNMENT SERVICES
2600 MICHELSON SR, STE 500
IRVINE, CA 92612

MANSFIELD LAHM AIR NATIONAL GUARD BASE, OH
REPAIR B403 FOR CYBER
FA877006
INTERIOR FINISH FLOOR PLAN

SHEET ID
IN101

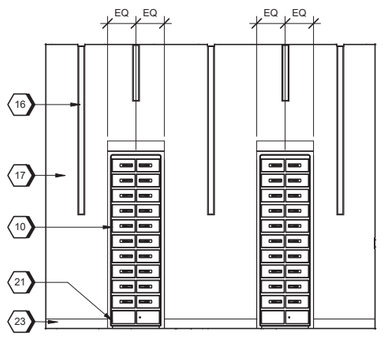

C1 VESTIBULE - SOUTH ELEVATION
SCALE 3/8" = 1'-0"

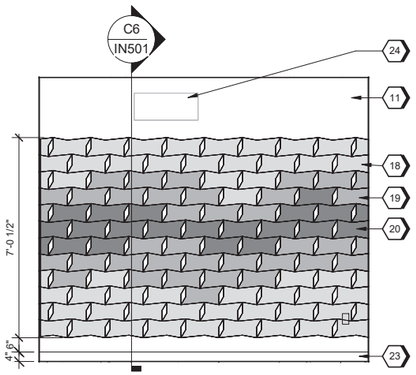

C3 VESTIBULE - NORTH ELEVATION
SCALE 3/8" = 1'-0"

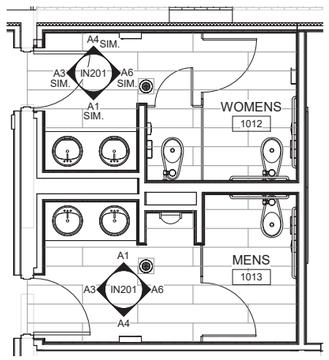

C4 ENLARGED PLAN - RESTROOMS
SCALE 1/4" = 1'-0"

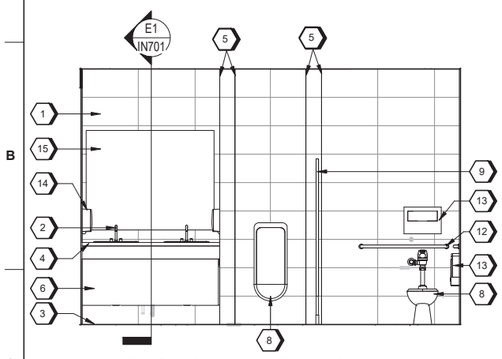

A1 MENS NORTH ELEVATION (WOMENS SIM. / OPP)
SCALE 3/8" = 1'-0"

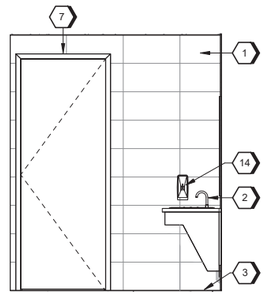

A3 MENS - WEST ELEVATION (WOMENS OPP.)
SCALE 3/8" = 1'-0"

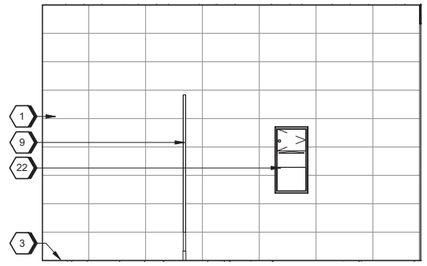

A4 MENS - SOUTH ELEVATION (WOMENS OPP.)
SCALE 3/8" = 1'-0"

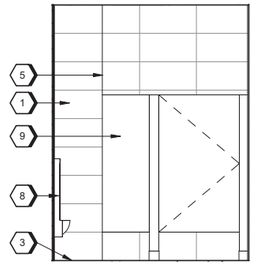

A6 MENS - EAST ELEVATION (WOMENS SIM. / OPP.)
SCALE 3/8" = 1'-0"

GENERAL SHEET NOTES

A. REFER TO SHEET IN601 FOR FINISH MATERIAL LEGEND AND ROOM FINISH SCHEDULE.

B. REFER TO ARCHITECTURE FOR REFLECTED CEILING PLAN.

C. REFER TO SHEET IN201 - IN202 FOR INTERIOR ELEVATIONS.

D. FINISHES INDICATED ARE THE APPROVED BASIS OF DESIGN TO CONVEY COLOR, PATTERN, TEXTURE AND SALIENT CHARACTERISTICS ONLY. THE LISTING OF MANUFACTURER INFORMATION IS NOT INTENDED TO LIMIT THE SELECTION OF PRODUCTS PROVIDED BY OTHER MANUFACTURERS. PRODUCTS MEETING THESE CRITERIA WILL BE CONSIDERD AND MUST BE REVIEWED BY USACE INTERIOR DESIGNER.

E. COORDINATE THERMOSTAT LOCATIONS WITH MECHANICAL DRAWINGS AND CONSTRUCTION MANAGER. INSTALL THERMOSTATS NEAR A CORNER OF A ROOM OR BY LIGHT SWICHES. DO NOT INSTALL THERMOSTATS IN THE CENTER OF A WALL.

F. TRANSITIONS MUST MEET ABA GUIDELINES.

G. REFER TO SHEET IF101 FOR ALL FF&E ITEMS.

H. REFER TO A-003 FOR ACCESSIBILITY MOUNTING STADNARDS AND TOILET ACCESSORIES.

I. PAINT ALL WALLS PT-1 UNLESS OTHERWISE NOTED.

J. PAINT ALL CEILING ELEMENTS, STRUCTURE, DUCTWORK, AND PIPES OTS-1.

(#) SHEET KEYNOTES

1. PORCELAIN WALL TILE PWT-1
2. SINK AND FAUCET, REFER TO PLUMBING.
3. STAINLESS STEEL COVE BASE SSC-1.
4. SOLID SURFACE COUNTERTOP SS-1.
5. INSTALL METAL TRIM AT ALL OUTSIDE TILED CORNERS.
6. PLASTIC LAMINATE PL-1 ADA APRON.
7. PAINT DOOR FRAME PT-3 PER SCHEDULE.
8. PLUMBING FIXTURE, REFER TO PLUMBING.
9. TOILET PARTITION TP-1.
10. CHARGING CELL PHONE LOCKERS.
11. PT-2 ACCENT PAINT.
12. GRAB BAR. REFER TO ARCHITECTURE.
13. TOILET ACCESSORY. REFER TO ARCHITECTURE.
14. SOAP DISPENSER. REFER TO ARCHITECTURE.
15. WALL HUNG MIRROR, CENTER ABOVE SINK.
16. LIGHTING DEVICE. REFER TO ELECTRICAL.
17. PAINT PT-1.
18. AWP-2: 428 SILBER
19. AWP-2: 284 HIMMEL
20. AWP-2: 686 ENZIAN
21. EXTEND WALL AND BASE FINISH IN WALL RECESS.
22. PAPER TOWEL DISPENSER/DISPOSAL. REFER TO ARCHITECTURE.
23. RESILIENT BASE RB-1.
24. MECHANICAL EQUIPMENT. REFER TO MECHANICAL.

GRAPHIC SCALE(S)

0 1' 2' 4' 8'
SCALE: 3/8" = 1'-0"

0 2' 4' 8' 12'
SCALE: 1/4" = 1'-0"

LICENSED ARCHITECT
DONALD WINSTEAD
No. ARC.2020028
05-08-26
STATE OF OHIO

MARK	DESCRIPTION	DATE

ISSUE DATE: MAY 2026
ANG PROJECT NO.: PBXP222050
CONTRACT NO.: FA8803-21-D-0008
TASK ORDER NO.: W50SBR23F0009

DESIGNED BY: M. WARRINER
DRAWN BY: M. WALTERS
CHECKED BY: B. ERNSTING
SUBMITTED BY: D. PEARSON
SIZE: ANSI D

OHIO AIR NATIONAL GUARD
MANSFIELD LAHM AIR NATIONAL GUARD BASE, OH

JACOBS GOVERNMENT SERVICES
2600 MICHELSON SR, STE 500
IRVINE, CA 92612

MANSFIELD LAHM AIR NATIONAL GUARD BASE, OH
REPAIR B403 FOR CYBER
FA877006
INTERIOR ELEVATIONS

SHEET ID
IN201

TYPE B-3 FINAL

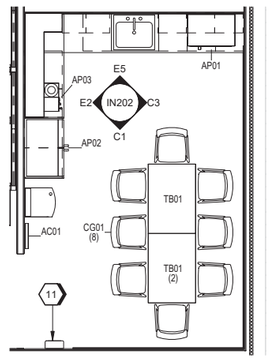

E1 ENLARGED PLAN - BREAK
SCALE 1/4" = 1'-0"

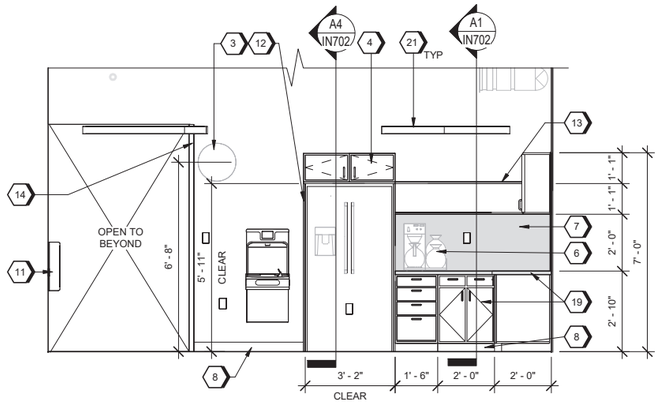

E2 BREAK - WEST ELEVATION
SCALE 3/8" = 1'-0"

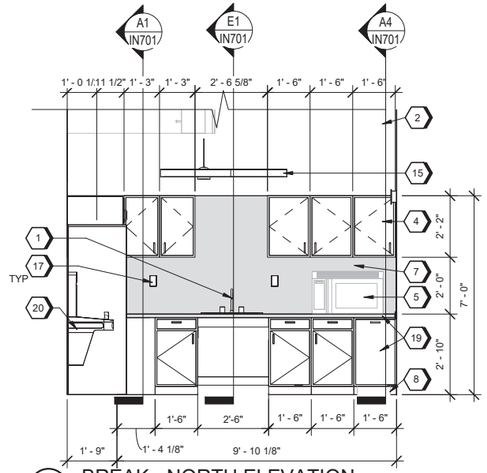

E5 BREAK - NORTH ELEVATION
SCALE 3/8" = 1'-0"

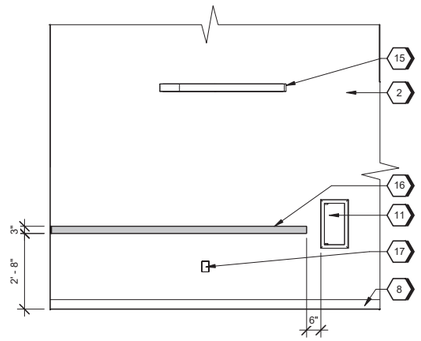

C1 BREAK - SOUTH ELEVATION
SCALE 3/8" = 1'-0"

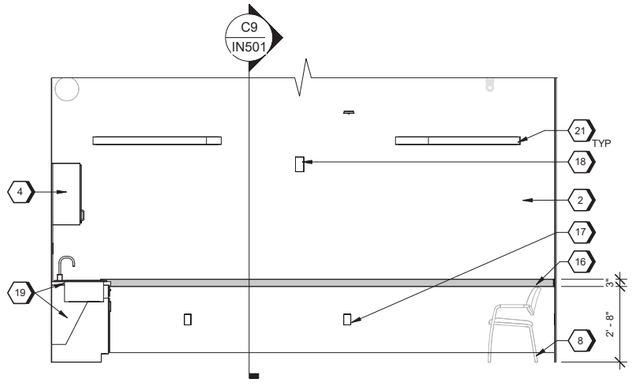

C3 BREAK - EAST ELEVATION
SCALE 3/8" = 1'-0"

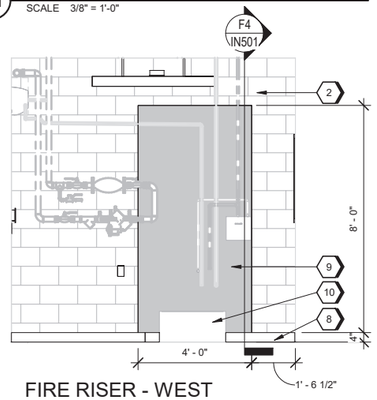

A1 FIRE RISER - WEST ELEVATION
SCALE 3/8" = 1'-0"

GENERAL SHEET NOTES

A. REFER TO SHEET IN601 FOR FINISH MATERIAL LEGEND AND ROOM FINISH SCHEDULE.

B. REFER TO ARCHITECTURE FOR REFLECTED CEILING PLAN.

C. REFER TO SHEET IN201 - IN202 FOR INTERIOR ELEVATIONS.

D. FINISHES INDICATED ARE THE APPROVED BASIS OF DESIGN TO CONVEY COLOR, PATTERN, TEXTURE AND SALIENT CHARACTERISTICS ONLY. THE LISTING OF MANUFACTURER INFORMATION IS NOT INTENDED TO LIMIT THE SELECTION OF PRODUCTS PROVIDED BY OTHER MANUFACTURERS. PRODUCTS MEETING THESE CRITERIA WILL BE CONSIDERD AND MUST BE REVIEWED BY USACE INTERIOR DESIGNER.

E. COORDINATE THERMOSTAT LOCATIONS WITH MECHANICAL DRAWINGS AND CONSTRUCTION MANAGER. INSTALL THERMOSTATS NEAR A CORNER OF A ROOM OR BY LIGHT SWICHES. DO NOT INSTALL THERMOSTATS IN THE CENTER OF A WALL.

F. TRANSITIONS MUST MEET ABA GUIDELINES.

G. REFER TO SHEET IF101 FOR ALL FF&E ITEMS.

H. REFER TO A-003 FOR ACCESSIBILITY MOUNTING STADNARDS AND TOILET ACCESSORIES.

I. PAINT ALL WALLS PT-1 UNLESS OTHERWISE NOTED.

J. PAINT ALL CEILING ELEMENTS, STRUCTURE, DUCTWORK, AND PIPES OTS-1.

SHEET KEYNOTES

1. SINK AND FAUCET, REFER TO PLUMBING.
2. PAINT PT-1.
3. AC1 WALL CLOCK, BATTERY (FF&E).
4. PL-1 PLASTIC LAMINATE UPPER CABINETS.
5. AP01, MICROWAVE (FFE).
6. AP03, COFFEE MAKER (FFE).
7. FULL HEIGHT SOLID SURFACE BACKSPLASH SS-1.
8. RESILIENT BASE RB-1.
9. FRP-1 FIBER REINFORCED PANEL.
10. MOP SINK. REFER TO PLUMBING.
11. FIRE EXTINGUISHING CABINET. REFER TO ARCHITECTURE.
12. PL-1 PLASTIC LAMINATE END PANEL.
13. PL-1 PLASTIC LAMINATE FLOATING SHELVES.
14. CORNER GUARD GG-1.
15. ACOUSTIC CEILING CLOUD ACC-1. REFER TO ARCHITECTURE REFLECTED CEILING PLANS.
16. CHAIR RAIL CR-1.
17. ELECTRICAL DEVICE. REFER TO ELECTRICAL .
18. FIRE ALARM DEVICE. REFER TO FIRE PROTECTION.
19. PL-1 PLASTIC LAMINATE CABINETS AND SS-1 SOLID SURFACE COUNTERTOP.
20. DRINKING FOUNTAIN, REFER TO ARCHITECTURE.
21. LIGHTING DEVICE. REFER TO ELECTRICAL.

GRAPHIC SCALE(S)

0 2' 4' 8' 12'
SCALE: 1/4" = 1'-0"

0 1' 2' 4' 8'
SCALE: 3/8" = 1'-0"

LICENSED ARCHITECT
DONALD WINSTEAD
No. ARC.2020028
05-08-26
STATE OF OHIO

MARK	DESCRIPTION	DATE

ISSUE DATE: MAY 2026
ANG PROJECT NO.: PBXP222050
CONTRACT NO.: FA8803-21-D-0008
TASK ORDER NO.: W50SBR23F0009

DESIGNED BY: M. WARRINER
DRAWN BY: M. WALTERS
CHECKED BY: B. ERNSTING
SUBMITTED BY: D. PEARSON
SIZE: ANSI D

OHIO AIR NATIONAL GUARD
MANSFIELD LAHM AIR NATIONAL GUARD BASE, OH

JACOBS GOVERNMENT SERVICES
2600 MICHELSON SR, STE 500
IRVINE, CA 92612

MANSFIELD LAHM AIR NATIONAL GUARD BASE, OH
REPAIR B403 FOR CYBER
FA877006
INTERIOR ELEVATIONS

SHEET ID
IN202

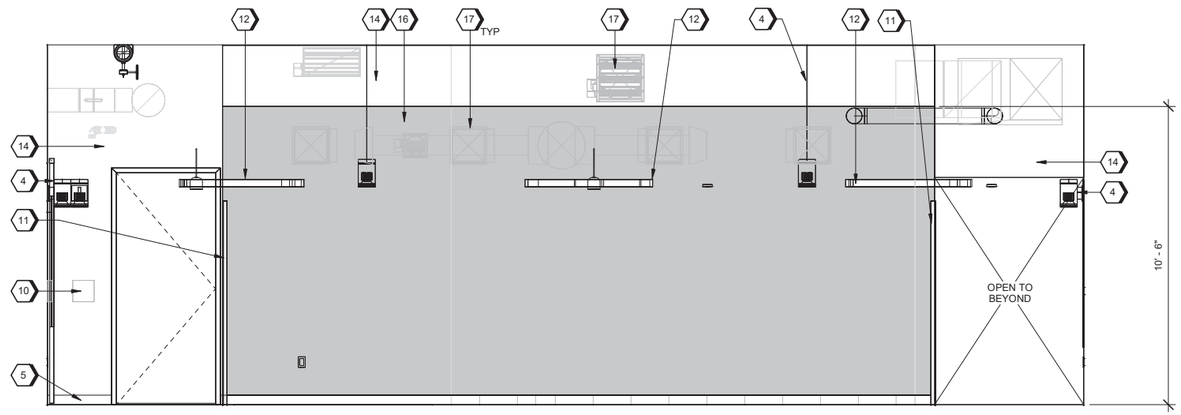

D1 OPEN OFFICE - WEST ELEVATION

SCALE 3/8" = 1'-0"

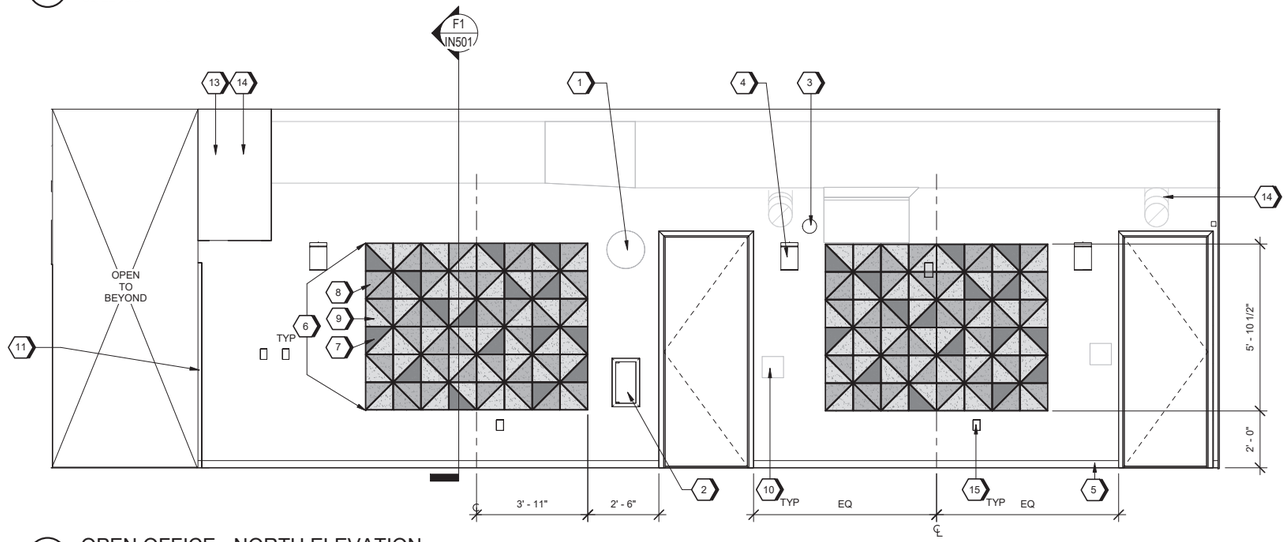

A1 OPEN OFFICE - NORTH ELEVATION

SCALE 3/8" = 1'-0"

GENERAL SHEET NOTES

A. REFER TO SHEET IN602 FOR FINISH MATERIAL LEGEND.

B. REFER TO SHEET IN601 FOR ROOM FINISH SCHEDULE.

C. REFER TO ARCHITECTURE FOR REFLECTED CEILING PLAN.

D. REFER TO SHEET IN201 - IN202 FOR INTERIOR ELEVATIONS.

E. FINISHES INDICATED ARE THE APPROVED BASIS OF DESIGN TO CONVEY COLOR, PATTERN, TEXTURE AND SALIENT CHARACTERISTICS ONLY. THE LISTING OF MANUFACTURER INFORMATION IS NOT INTENDED TO LIMIT THE SELECTION OF PRODUCTS PROVIDED BY OTHER MANUFACTURERS. PRODUCTS MEETING THESE CRITERIA WILL BE CONSIDERD AND MUST BE REVIEWED BY USACE INTERIOR DESIGNER.

F. COORDINATE THERMOSTAT LOCATIONS WITH MECHANICAL DRAWINGS AND CONSTRUCTION MANAGER. INSTALL THERMOSTATS NEAR A CORNER OF A ROOM OR BY LIGHT SWICHES. DO NOT INSTALL THERMOSTATS IN THE CENTER OF A WALL.

G. TRANSITIONS MUST MEET ABA GUIDELINES.

H. REFER TO SHEET IF101 FOR ALL FF&E ITEMS.

I. REFER TO A-003 FOR ACCESSIBILITY MOUNTING STADNARDS AND TOILET ACCESSORIES.

J. PAINT ALL WALLS PT-1 UNLESS OTHERWISE NOTED.

K. PAINT ALL CEILING ELEMENTS, STRUCTURE, DUCTWORK, AND PIPES OTS-1.

(#) SHEET KEYNOTES

1. AC01, WALL CLOCK, BATTERY.
2. FIRE EXTINGUISHER CABINET, REFER TO ARCHITECTURE.
3. LIGHTING FIXTURE, REFER TO ELECTRICAL.
4. LIGHTING DEVICE. REFER TO ELECTRICAL.
5. RESILIENT BASE RB-1.
6. GROUPING OF AWP-1A, AWP-1B, AND AWP-1C - CONTAINS 20% AWP-1A, 40% AWP-1B, AND 40% AWP-1C.
7. AWP-1A.
8. AWP-1B.
9. AWP-1C.
10. SIGNAGE. REFER TO IG101 SIGNAGE PLAN.
11. CORNER GUARD GG-1.
12. ACOUSTIC CEILING CLOUD ACC-1. REFER TO ARCHITECTURE REFLECTED CEILING PLANS.
13. SOFFIT, REFER TO ARCHITECTURE.
14. PAINT PT-1.
15. ELECTRICAL DEVICE. REFER TO ELECTRICAL .
16. PAINT PT-2. .
17. MECHANICAL EQUIPMENT. REFER TO MECHANICAL.

GRAPHIC SCALE(S)

0 1' 2' 4' 8'

SCALE: 3/8" = 1'-0"

LICENSED ARCHITECT
DONALD WINSTEAD
No. ARC.2020028
05-08-26
STATE OF OHIO

MARK	DESCRIPTION	DATE

DESIGNED BY: M. WARRINER
DRAWN BY: M. WALTERS
CHECKED BY: B. ERNSTING
SUBMITTED BY: J. PEARSON
SIZE: ANSI D
ISSUE DATE: MAY 2026
ANG PROJECT NO.: PBXP222050
CONTRACT NO.: FA8803-21-D-0008
TASK ORDER NO.: W50SBR23F0009

OHIO AIR NATIONAL GUARD
MANSFIELD LAHM AIR NATIONAL GUARD BASE, OH

JACOBS GOVERNMENT SERVICES
2600 MICHELSON SR, STE 500
IRVINE, CA 92812

MANSFIELD LAHM AIR NATIONAL GUARD BASE, OH
REPAIR B403 FOR CYBER
FA877006
INTERIOR ELEVATIONS

SHEET ID

IN203

TYPE B-3 FINAL

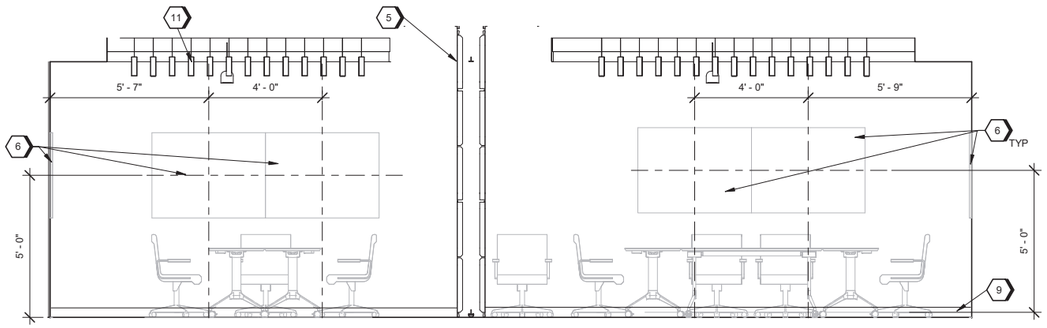

E1 CONFERENCE 1016 / 1015 - NORTH ELEVATION
SCALE 3/8" = 1'-0"

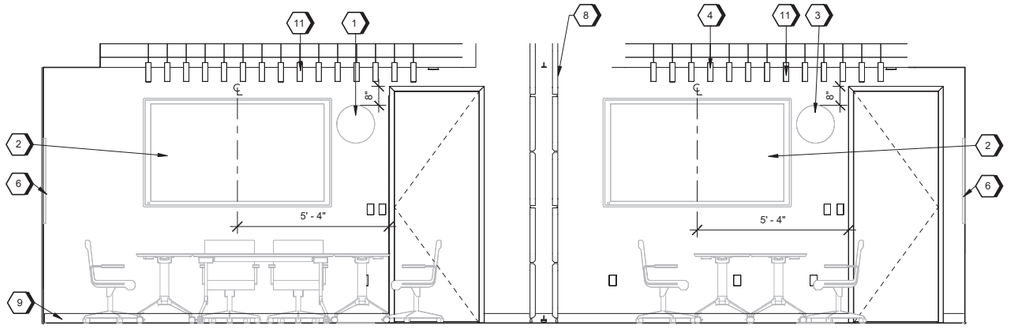

C1 CONFERENCE 1016 / 1015 - SOUTH ELEVATION
SCALE 3/8" = 1'-0"

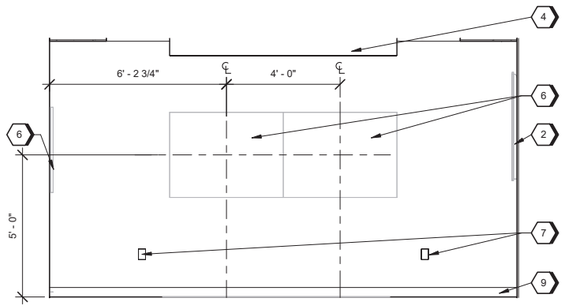

A1 CONFERENCE 1016 - EAST ELEVATION
SCALE 3/8" = 1'-0"

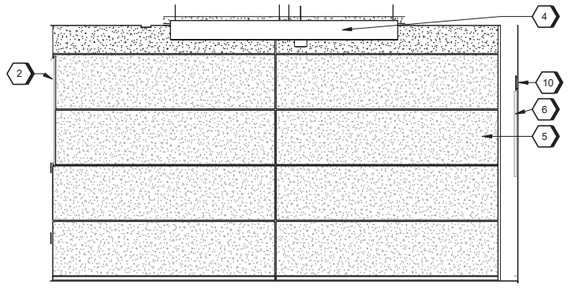

A4 CONFERENCE 1016 - WEST ELEVATION
SCALE 3/8" = 1'-0"

GENERAL SHEET NOTES

A. REFER TO SHEET IN001 FOR FINISH MATERIAL LEGEND AND ROOM FINISH SCHEDULE.

B. REFER TO ARCHITECTURE FOR REFLECTED CEILING PLAN.

C. REFER TO SHEET IN201 - IN202 FOR INTERIOR ELEVATIONS.

D. FINISHES INDICATED ARE THE APPROVED BASIS OF DESIGN TO CONVEY COLOR, PATTERN, TEXTURE AND SALIENT CHARACTERISTICS ONLY. THE LISTING OF MANUFACTURER INFORMATION IS NOT INTENDED TO LIMIT THE SELECTION OF PRODUCTS PROVIDED BY OTHER MANUFACTURERS. PRODUCTS MEETING THESE CRITERIA WILL BE CONSIDERD AND MUST BE REVIEWED BY USACE INTERIOR DESIGNER.

E. COORDINATE THERMOSTAT LOCATIONS WITH MECHANICAL DRAWINGS AND CONSTRUCTION MANAGER. INSTALL THERMOSTATS NEAR A CORNER OF A ROOM OR BY LIGHT SWICHES. DO NOT INSTALL THERMOSTATS IN THE CENTER OF A WALL.

F. TRANSITIONS MUST MEET ABA GUIDELINES.

G. REFER TO SHEET IF101 FOR ALL FF&E ITEMS.

H. REFER TO A-003 FOR ACCESSIBILITY MOUNTING STADNARDS AND TOILET ACCESSORIES.

I. PAINT ALL WALLS PT-1 UNLESS OTHERWISE NOTED.

J. PAINT ALL CEILING ELEMENTS, STRUCTURE, DUCTWORK, AND PIPES OTS-1.

#SHEET KEYNOTES

1. AC01, WALL CLOCK, BATTERY.
2. PROVIDE WALL BLOCKING FOR TELEVISION/ MONITOR AS REQUIRED. REFER TO C3 / A-701.
3. AC1 WALL CLOCK, BATTERY (FF&E).
4. ACOUSTIC CEILING BAFFLE SYSTEM ACB-1 / ACB-2. REFER TO ARCHITECTURE REFLECTED CEILING PLAN.
5. OPERABLE PARTITION. FINISH: ACOUSTIC WALL COVERING OPR-1.
6. AC06, MARKERBOARD 48" X 36" (FFE).
7. ELECTRICAL DEVICE. REFER TO ELECTRICAL .
8. OPERABLE PARTITION WITH ACOUSTIC WALL COVERING OPR-1. REFER TO ARCHITECTURE.
9. RESILIENT BASE RB-1.
10. FIRE ALARM DEVICE. REFER TO FIRE PROTECTION.
11. ACOUSTICAL FELT CEILING BAFFLES - ACB-1 AND ACB-2 REFERENCE ELECTRICAL FOR LIGHTING INFORMATION. REFER TO ARCHITECTURE REFLECTED CEILING PLAN.

GRAPHIC SCALE(S)

0 1' 2' 4' 8'
SCALE: 3/8" = 1'-0"

LICENSED ARCHITECT
DONALD WINSTEAD
No. ARC.2020028
05-08-26
STATE OF OHIO

MARK	DESCRIPTION	DATE

DESIGNED BY: M. WARRINER
DRAWN BY: M. WALTERS
CHECKED BY: B. ERNSTING
SUBMITTED BY: D. PEARSON
SIZE: ANSI D

ISSUE DATE: MAY 2026
ANG PROJECT NO.: PBXP222050
CONTRACT NO.: FA8803-21-D-0008
TASK ORDER NO.: W50SBR23F0009

OHIO AIR NATIONAL GUARD
MANSFIELD LAHM AIR NATIONAL GUARD BASE, OH

JACOBS GOVERNMENT SERVICES
2600 MICHELSON SR, STE 500
IRVINE, CA 92612

MANSFIELD LAHM AIR NATIONAL GUARD BASE, OH
REPAIR B403 FOR CYBER
FA877006
INTERIOR ELEVATIONS

SHEET ID
IN204

TYPE B-3 FINAL

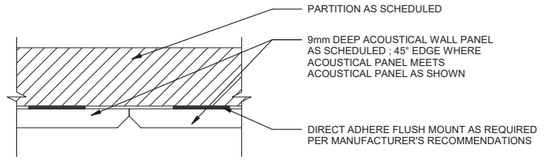

F1 ACOUSTICAL WALL PANEL INSTALLATION DETAIL
SCALE 3" = 1'-0"

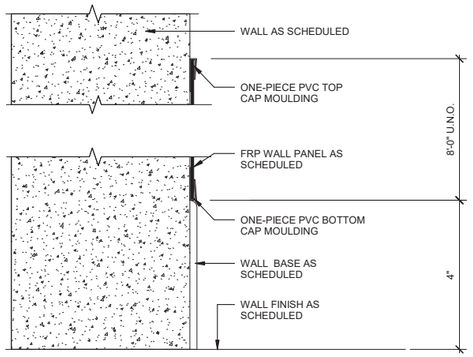

F4 FIBER REINFORCED PANEL
SCALE 6" = 1'-0"

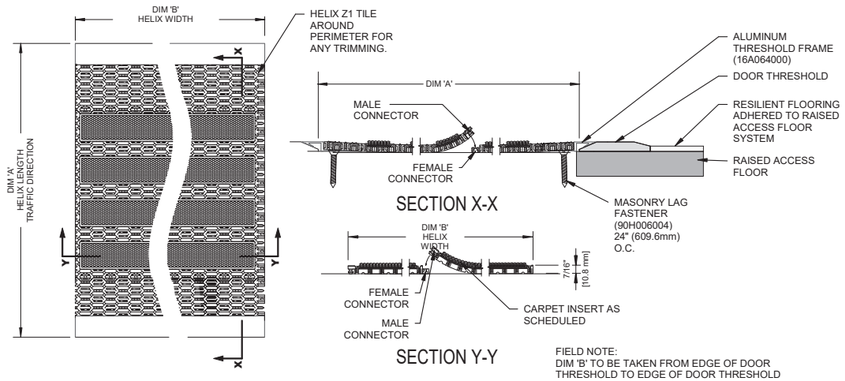

D6 WALK OFF CARPET DETAIL
SCALE 3" = 1'-0"

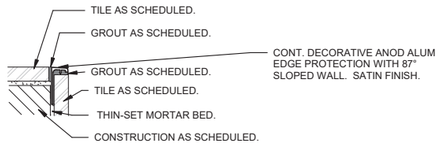

D1 METAL TRIM AT OUTSIDE CORNER
SCALE NTS

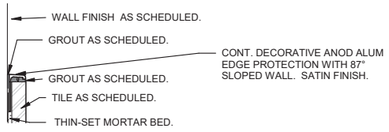

D3 METAL TRIM AT TILE WAINSCOT
SCALE 6" = 1'-0"

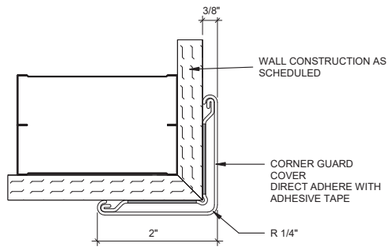

C1 CORNER GUARD - SURFACE MOUNT
SCALE NTS

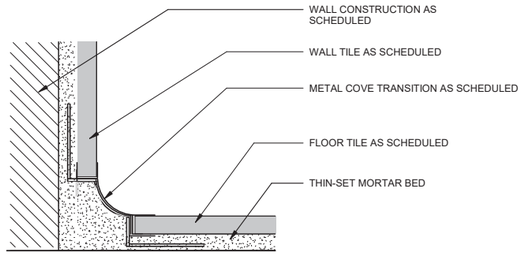

C3 COVE AT BASE
SCALE NTS

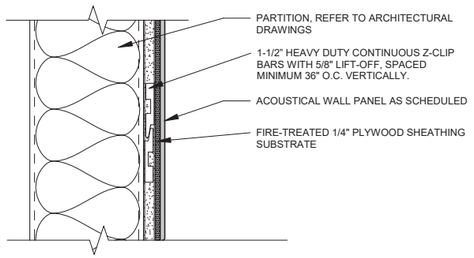

C6 BASE DETAIL - ACOUSTICAL WALL PANEL
SCALE 3" = 1'-0"

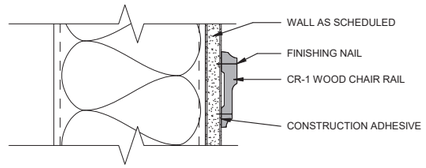

C9 WOOD CHAIR RAIL
SCALE 1" = 0'-3"

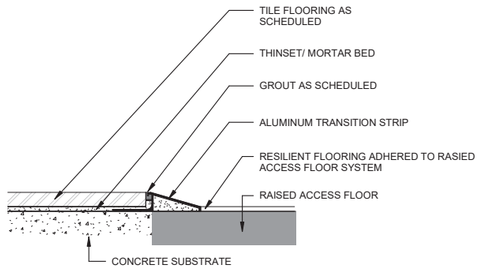

A1 RESILIENT FLOORING TO TILE
SCALE 6" = 1'-0"

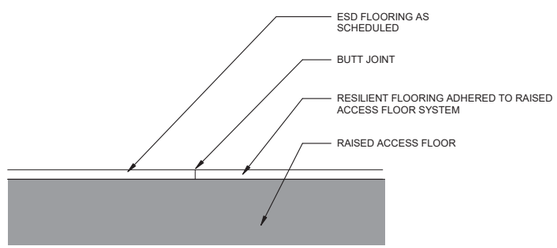

A3 RESILIENT FLOORING TO ELECTROSTATIC DISSAPATIVE FLOORING
SCALE 12" = 1'-0"

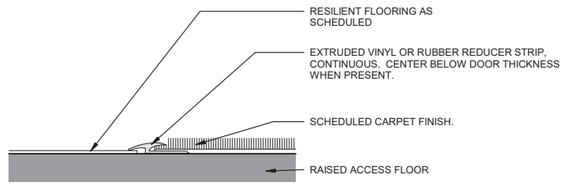

A6 RESILIENT FLOORING TO CARPET
SCALE 6" = 1'-0"

LICENSED ARCHITECT
DONALD WINSTEAD
No. ARC.2520028
05-08-26
STATE OF OHIO

MARK	DESCRIPTION	DATE

DESIGNED BY: M. WARRINER
DRAWN BY: M. WALTERS
CHECKED BY: B. ERNSTING
SUBMITTED BY: D. PEARSON
SIZE: ANSI D
ISSUE DATE: MAY 2026
ANG PROJECT NO.: PBXP222050
CONTRACT NO.: FA8803-21-D-0008
TASK ORDER NO.: W50S8R23F0009

OHIO AIR NATIONAL GUARD
MANSFIELD LAHM AIR NATIONAL GUARD BASE, OH

JACOBS GOVERNMENT SERVICES
2600 MICHELSON SR. STE 500
IRVINE, CA 92612

MANSFIELD LAHM AIR NATIONAL GUARD BASE, OH
REPAIR B403 FOR CYBER
FA877006
INTERIOR DETAILS

SHEET ID
IN501

TYPE B-3 FINAL

ROOM FINISH SCHEDULE

ROOM	NAME	FLOOR FINISH	BASE FINISH	WALL FINISH				CEILING FINISH	NOTES & REMARKS
				NORTH	EAST	SOUTH	WEST		
1000	VESTIBULE	WOC-1	RB-1	PT-2 / AWP-2	PT-1	PT-1	PT-1	GYP-2	PAINT CELL PHONE LOCKER RECESS PT-1. CONTINUE RB-1 BEHIND CELL PHONE LOCKERS
1001	OPEN OFFICE	RAF-L	RB-1	PT-1 / AWP-1A / AWP-1B / AWP-1C	PT-1	PT-1	PT-1 / PT-2	GYP-1	
1002	BREAK	RAF-L	RB-1	PT-1 / SS-1	PT-1 / SS-1	PT-1 / CR-1	PT-1 / CR-1	GYP-1 / ACC-1	SS-1 COUNTER TOPS; PL-1 CABINETS; GR-1 GROUT. REFER TO INTERIOR ELEVATIONS ON IN202
1003	OFFICE	RAF-C1	RB-1	PT-1	PT-1	PT-2	PT-1	GYP-1 / ACB-1 / ACB-2	
1004	OFFICE	RAF-C1	RB-1	PT-1	PT-1	PT-2	PT-1	GYP-1 / ACB-1 / ACB-2	
1005	OFFICE	RAF-C1	RB-1	PT-1	PT-1	PT-2	PT-1	GYP-1 / ACB-1 / ACB-2	
1006	TEF	RAF-E	RB-1	PT-1	PT-1	PT-1	PT-1	GYP-1	
1007	LAB A	RAF-E	RB-1	PT-1	PT-1	PT-1	PT-1	GYP-1 / ACC-1	
1008	LAB B	RAF-E	RB-1	PT-1	PT-1	PT-1	PT-1	GYP-1 / ACC-1	
1009	LAB C	RAF-E	RB-1	PT-1	PT-1	PT-1	PT-1	GYP-1 / ACC-1	
1010	CIRCULATION	RAF-L	RB-1	PT-1	--	PT-1	PT-1	GYP-1	
1011	CIRC	RAF-L	RB-1	PT-1	PT-1	--	PT-2	GYP-1	
1012	WOMENS	PFT-1	SSC-1	PWT-1	PWT-1	PWT-1	PWT-1	GYP-2	SS-1 COUNTER TOPS; PL-1 BASE CABINET; GR-1 GROUT; TP-1 TOILET PARTITIONS. REFER TO INTERIOR ELEVATIONS ON IN201
1013	MENS	PFT-1	SSC-1	PWT-1	PWT-1	PWT-1	PWT-1	GYP-2	SS-1 COUNTER TOPS; PL-1 BASE CABINET; GR-1 GROUT; TP-1 TOILET PARTITIONS. REFER TO INTERIOR ELEVATIONS ON IN201
1014	CONFERENCE	RAF-C2	RB-1	PT-2	OPR-1 / PL-1	PT-1	PT-1	GYP-1 / ACB-1 / ACB-2	OPERABLE WALL. REFER TO ELEVATION C1 / IN201
1015	CONFERENCE	RAF-C2	RB-1	PT-2	PT-1	PT-1	OPR-1 / PL-1	GYP-1 / ACB-1 / ACB-2	OPERABLE WALL. REFER TO ELEVATION C1 / IN201
1016	SECURITY	RAF-C1	RB-1	PT-1	PT-2	PT-1	PT-1	GYP-1 / ACB-1 / ACB-2	
1018	FIRE RISER	SC-1	RB-1	PT-1	PT-1	PT-1	PT-1 / FRP-1	OTS-1	
1019	ELEC	SC-1	RB-1	PT-1	PT-1	PT-1	PT-1	OTS-1	

FINISH LEGEND

ITEM CODE	DESCRIPTION	MODEL	COLOR	SIZE	NOTES	LOCATION
FLOORING						
PFT-1	PORCELAIN FLOOR TILE	MALIBU	HONEY	12" X 70"		RESTROOMS
RAF-C1	RAISED ACCESS FLOOR WITH CARPET TILE	OPEN AIR 418	107042 CHARCOAL	50CM X 50CM	REFER TO ARCHITECTURAL DETAILS	PRIVATE OFFICES AND SECURITY
RAF-C2	RAISED ACCESS FLOOR WITH ACCENT CARPET TILE	KNITSTITCH	103339 LINEN / LAPIS	50CM X 50CM	REFER TO ARCHITECTURAL DETAILS	CONFERENCE ROOMS
RAF-E	RAISED ACCESS FLOOR WITH ELECRTOSTATIC DISSIPATIVE FLOORING	COLOREX SD	1502206 MOONSTONE	24"X24"	REFER TO ARCHITECTURAL DETAILS	LABS
RAF-L	RAISED ACCESS FLOOR WITH LUXURY VINYL TILE	CHRONICAL OAK	ARCHIVE 4620	6" X 24"	REFER TO ARCHITECTURAL DETAILS	CORRIDORS AND BREAK ROOM
SC-1	SEALED CONCRETE	SELECTSEAL PLUS	CLEAR			PER PLAN
WOC-1	WALK OFF CARPET	WITH THRESHOLD FRAME	BLACK	SEE PLAN		VESTIBULE
BASE						
RB-1	RESILIENT BASE	TYPE TS	NAVY BLUE	4" HIGH		
SSC-1	STAINLESS STEEL COVE BASE	--	CLASSIC GREY	3/8" H		
WALLS						
AWP-1A	ACOUSTIC WALL PANEL	--	26 FADED DENIM	12" X 12" TILE. 9 MM DEPTH	ADHESIVE BACKING. DIAMOND LAYOUT WITH AWP-2 AND AWP-3	OPEN OFFICE
AWP-1B	ACOUSTIC WALL PANEL	--	66 PEWTER	12" X 12" TILE. 9 MM DEPTH	ADHESIVE BACKING. DIAMOND LAYOUT WITH AWP-1 AND AWP-3	OPEN OFFICE
AWP-1C	ACOUSTIC WALL PANEL	--	50 IVORY	12" X 12" TILE. 9 MM DEPTH	ADHESIVE BACKING. DIAMOND LAYOUT WITH AWP-1 AND AWP-2	OPEN OFFICE
AWP-2	ACOUSTIC WALL PANEL SYSTEM	3-COLOR PATTERN 2: FF-AR-BLO3-004 ARO BLOCK	686 ENZIAN, 428 SILBER, 284 HIMMEL	3 1'-6" x 8" x 1/2"	ADHESIVE BACKING. REFER TO ELEVATION FOR PATTERN AND GROUPING SIZE.	VESTIBULE
FRP-1	FIBER REINFORCED PANEL	SMOOTH FRP	LIGHT GREY	48" AFF HEIGHT		FIRE RISER
PT-1	PAINT, FIELD	--	R-4 NEW RED - (OZ) ,1(32), 1(64), -(128) , W1-WHITE, 6(OZ), 8(32), -(64) , - (128)			
PT-2	PAINT, ACCENT	--	B-1 BLACK 5 (OZ) ,57(32) -(64), -(128) , Y3-GOLD, 15(OZ), 32 (32), -(64), -(128)			
PWT-1	PORCELAIN WALL TILE	FORDHAM GRIGIO	GRIGIO	12" X 24"		RESTROOMS
CEILINGS						
ACB-1	ACOUSTIC CEILING BAFFLE	UNLIT 8" H	PEBBLE (PEB)			
ACB-2	ACOUSTIC CEILING BAFFLE WITH INTERGRATING LIGHTING	LIT 8" H	PEBBLE (PEB)			
ACC-1	ACOUSTIC CEILING CLOUD	--	TONAL TAUPE 34			
GYP-1	GYPSUM CEILING, PAINT	--	BLACK		EGG SHELL FINISH	
GYP-2	GYPSUM CEILING, EPOXY PAINT	INTERIOR ACRYLIC LATEX PAINT	WHITE		SEMI-GLOSS FINISH	
OTS-1	OPEN TO STRUCTURE - PAINTED	--	BLACK		FLAT FINISH	
MISCELLANEOUS						
CG-1	CORNER GUARD	CORNER GUARDS	858 PUMICE	3" LEGS		ALL OUTSIDE GYPSUM CORNERS.
CR-1	WOOD CHAIR RAIL	--	PAINT PT-2	4 3/8"H x 3/8"P x 96"L	PRIMED FINGERJOINT PINE	BREAK ROOM
GR-1	GROUT	--	STERLING SILVER			
LK-1	CELL PHONE CHARGING LOCKER	--	STANDARD WHITE			
OPR-1	OPERABLE PARTITION, ACOUSTIC WALL COVERING	MARIN 1300	DOLPHIN 1300-1147		FOR USE ON SKYFOLD OPERABLE PARTITION	CONFERENCE ROOM
PT-3	PAINT - DOORS, FRAMES, AND SIGNAGE	--	B-1 BLACK 5 (OZ) ,57(32) -(64), -(128) , Y3-GOLD, 15(OZ), 32 (32), -(64), -(128)			
TP-1	TOILET PARTITION	PARTITIONS	DESERT STONE S406			
MILLWORK						
PL-1	PLASTIC LAMINATE	HPL	8232 CONTINENTAL WALNUT		05 TIMBERGRAIN TEXTURE	ALL CABINETS AND IN CONFERENCE ROOM ON OPERABLE PARTITION
SS-1	SOLID SURFACE COUNTERTOP	SOLID SURFACE	BROOKLYN CONCRETE 9219GS			

GENERAL SHEET NOTES

A. REFER TO SHEET IN101 FOR FINISH FLOOR PLAN.

B. REFER TO ARCHITECTURE FOR REFLECTED CEILING PLAN.

C. REFER TO SHEET IN201 - IN202 FOR INTERIOR ELEVATIONS.

D. FINISHES INDICATED ARE THE APPROVED BASIS OF DESIGN TO CONVEY COLOR, PATTERN, TEXTURE AND SALIENT CHARACTERISTICS ONLY. THE LISTING OF MANUFACTURER INFORMATION IS NOT INTENDED TO LIMIT THE SELECTION OF PRODUCTS PROVIDED BY OTHER MANUFACTURERS. PRODUCTS MEETING THESE CRITERIA WILL BE CONSIDERED AND MUST BE REVIEWED BY USACE INTERIOR DESIGNER.

E. COORDINATE THERMOSTAT LOCATIONS WITH MECHANICAL DRAWINGS AND CONSTRUCTION MANAGER. INSTALL THERMOSTATS NEAR A CORNER OF A ROOM OR BY LIGHT SWITCHES. DO NOT INSTALL THERMOSTATS IN THE CENTER OF A WALL.

F. TRANSITIONS MUST MEET ABA GUIDELINES.

G. TRANSITIONS OCCURRING UNDER DOORS MUST BE CENTERED UNDER DOOR.

LICENSED ARCHITECT
DONALD WINSTEAD
No. ARC.2520028
05-08-26
STATE OF OHIO

MARK	DESCRIPTION	DATE

DESIGNED BY: M. WARRINER
DRAWN BY: M. WALTERS
CHECKED BY: B. ERNSTING
SUBMITTED BY: J. PEARSON
SIZE: ANSI D
ISSUE DATE: MAY 2026
ANG PROJECT NO.: PBXP222050
CONTRACT NO.: FA8803-21-D-0008
TASK ORDER NO.: W50S8R23F0009

OHIO AIR NATIONAL GUARD
MANSFIELD LAHM AIR NATIONAL GUARD BASE, OH

JACOBS GOVERNMENT SERVICES
2600 MICHELSON SR. STE 500
IRVINE, CA 92812

MANSFIELD LAHM AIR NATIONAL GUARD BASE, OH
REPAIR B403 FOR CYBER
FA8777006
ROOM FINISH SCHEDULE AND FINISH LEGEND

SHEET ID

IN601

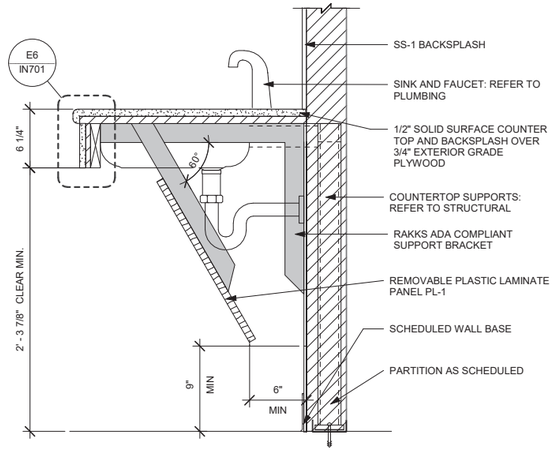

E1 SECTION AT SINK WITH APRON

SCALE 1 1/2" = 1'-0"

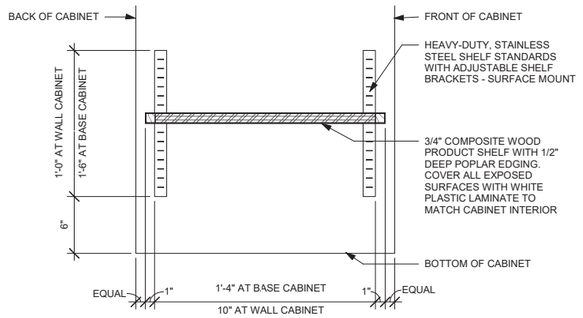

F4 ADJUSTABLE SHELF DETAIL

SCALE 1 1/2" = 1'-0"

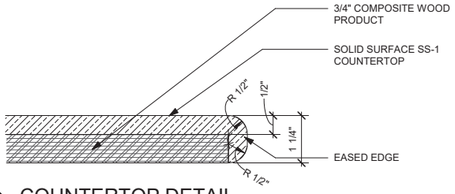

E4 COUNTERTOP DETAIL

SCALE 6" = 1'-0"

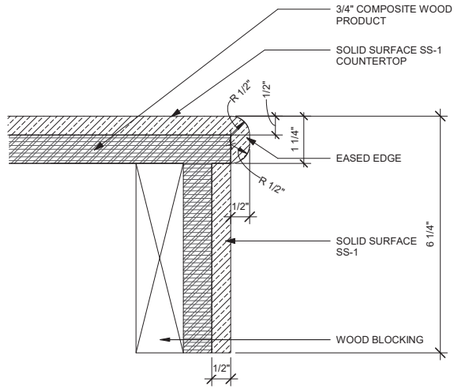

E6 COUNTERTOP EDGE DETAIL

SCALE 6" = 1'-0"

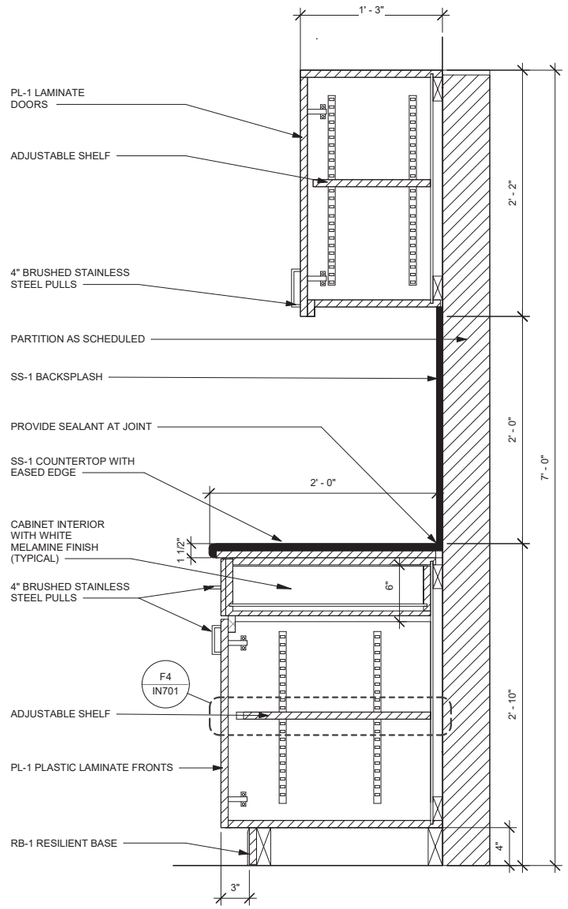

A1 MILLWORK SECTION - UPPER & LOWER CABINETS

SCALE 1 1/2" = 1'-0"

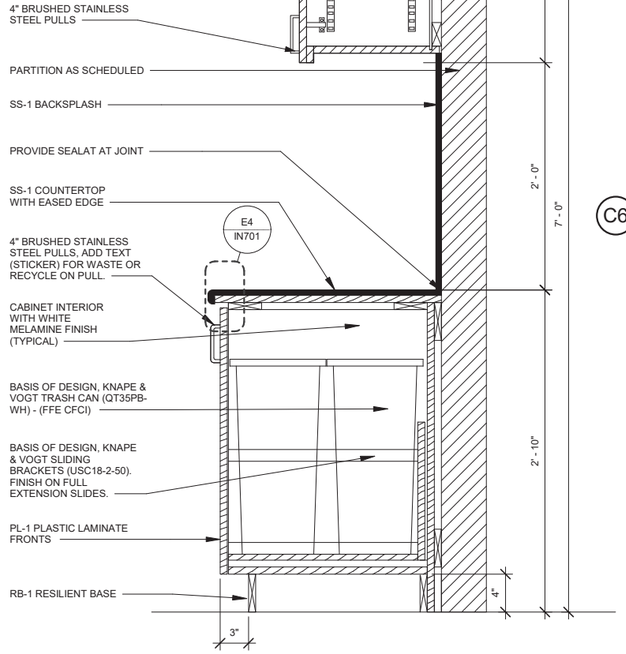

A4 MILLWORK SECTION - WASTE AND RECYCLE

SCALE 1 1/2" = 1'-0"

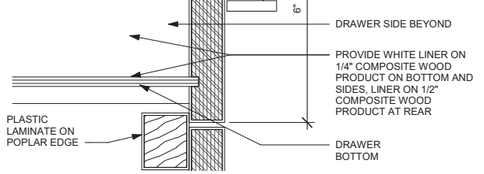

C6 COUNTERTOP DETAIL

SCALE 6" = 1'-0"

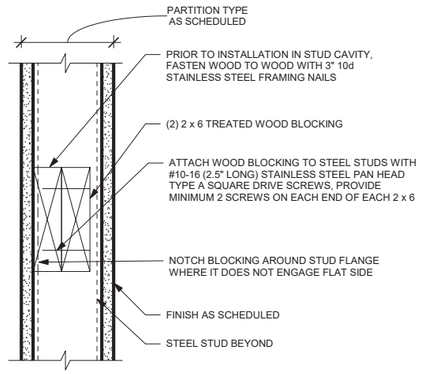

A6 BLOCKING DETAIL

SCALE 3" = 1'-0"

GRAPHIC SCALE(S)

0 1" 2" 4" 6"
SCALE: 6" = 1'-0"

0 3" 6" 1'
SCALE: 3" = 1'-0"

0 3" 6" 1' 2'
SCALE:1 1/2" = 1'-0"

LICENSED ARCHITECT
DONALD WINSTEAD
No. ARC.2020028
05-08-26
STATE OF OHIO

MARK	DESCRIPTION	DATE

DESIGNED BY: M. WARRINER
DRAWN BY: M. WALTERS
CHECKED BY: B. ERNSTING
SUBMITTED BY: D. PEARSON
SIZE: ANSI D

ISSUE DATE: MAY 2026
ANG PROJECT NO.: PBXP222050
CONTRACT NO.: FA8803-21-D-0008
TASK ORDER NO.: W50S8R23F0009

OHIO AIR NATIONAL GUARD
MANSFIELD LAHM AIR NATIONAL GUARD BASE, OH

JACOBS GOVERNMENT SERVICES
2600 MICHELSON SR, STE 500
IRVINE, CA 92612

MANSFIELD LAHM AIR NATIONAL GUARD BASE, OH
REPAIR B403 FOR CYBER
FA877006
INTERIOR MILLWORK SECTIONS

SHEET ID
IN701

TYPE B-3 FINAL

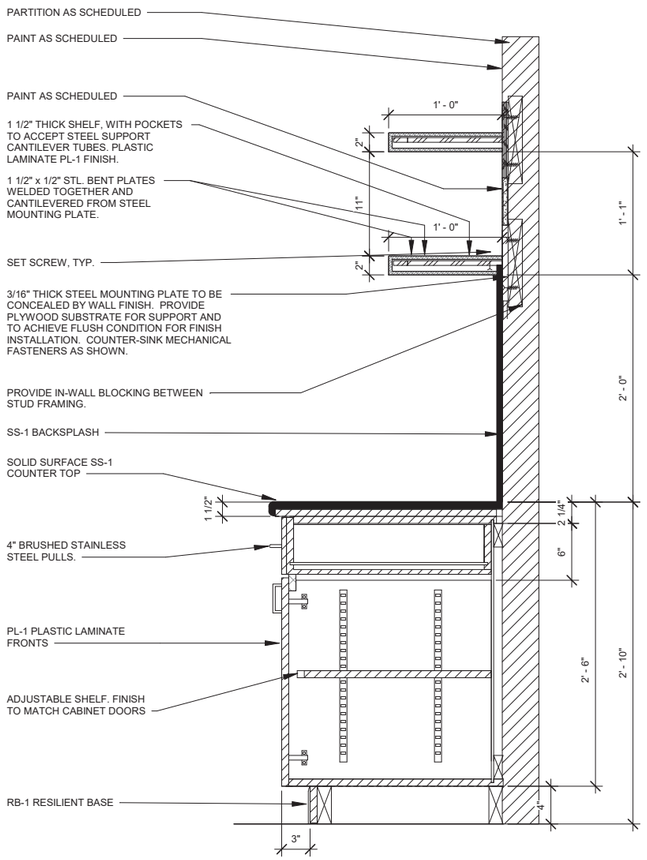

A1 MILLWORK SECTION - BASE CABINET WITH FLOATING SHELVES

SCALE 1 1/2" = 1'-0"

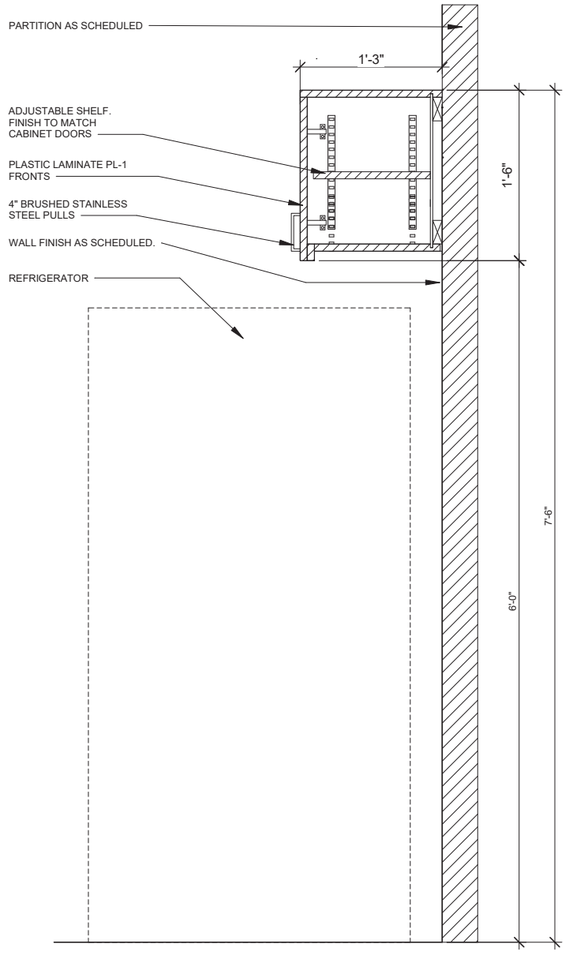

A4 MILLWORK SECTION - UPPER & BASE CABINET AT REFRIGERATOR

SCALE 1 1/2" = 1'-0"

LICENSED ARCHITECT
DONALD WINSTEAD
No. ARC.2520029
05-08-26
STATE OF OHIO

MARK	DESCRIPTION	DATE

DESIGNED BY: M. WARRINER
DRAWN BY: M. WALTERS
CHECKED BY: B. ERNSTING
SUBMITTED BY: D. PEARSON
SIZE: ANSI D
ISSUE DATE: MAY 2026
ANG PROJECT NO.: PBXP222050
CONTRACT NO.: FA8803-21-D-0008
TASK ORDER NO.: W50S8R23F0009

OHIO AIR NATIONAL GUARD
MANSFIELD LAHM AIR NATIONAL GUARD BASE, OH

JACOBS GOVERNMENT SERVICES
2600 MICHELSON SR, STE 500
IRVINE, CA 92612

MANSFIELD LAHM AIR NATIONAL GUARD BASE, OH
REPAIR B403 FOR CYBER
FA877006
INTERIOR MILLWORK SECTIONS

SHEET ID

IN702

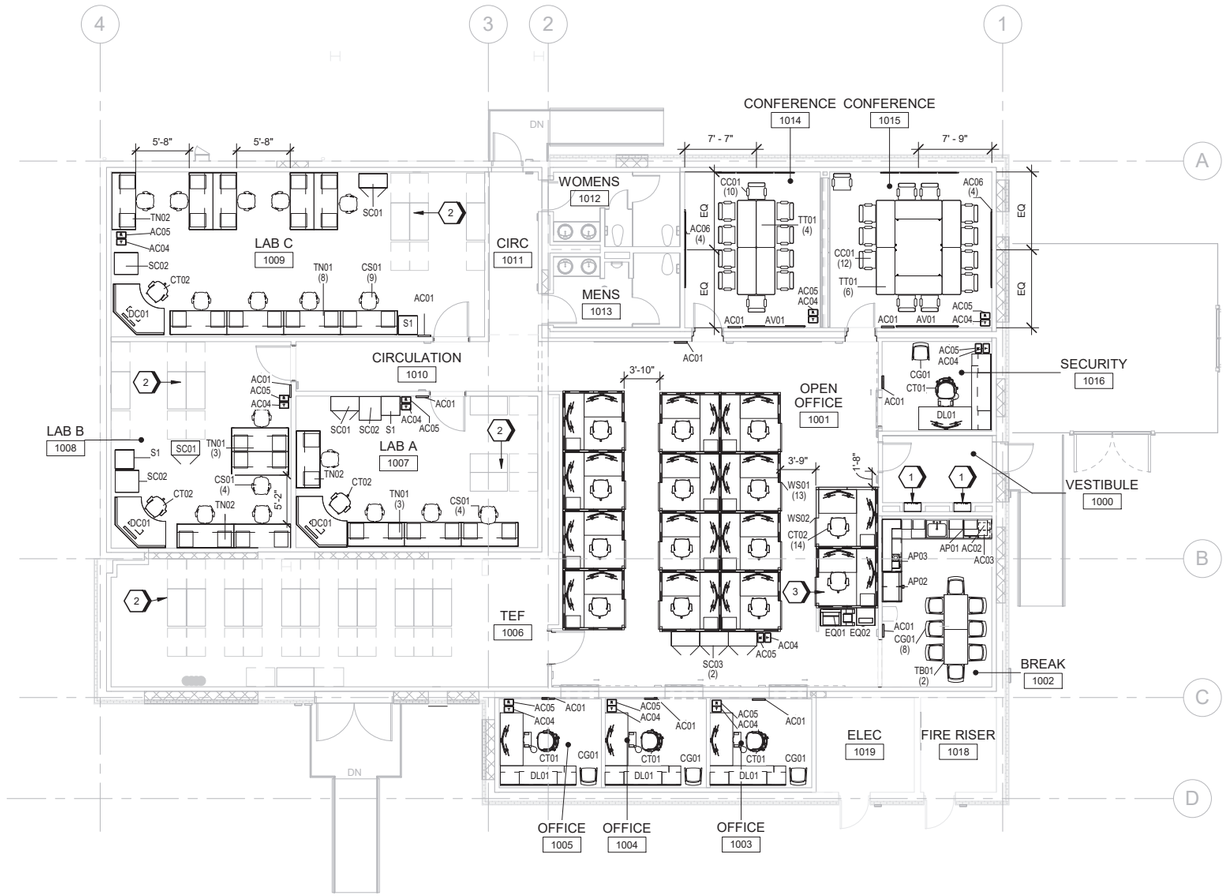

A1 FURNITURE, FIXTURES, AND EQUIPMENT PLAN

SCALE 1/8" = 1'-0"

GENERAL SHEET NOTES

A. ALL FF&E IS CONTRACTOR FURNISHED CONTRACTOR INSTALLED (CFCI) AS AN OPTION TO THE CONTRACT UNLESS NOTED AS GOVERNMENT FURNISHED GOVERMENT INSTALLED (GFGI).

B. ALL FURNITURE COUNTS TO BE CONFIRMED BY FURNITURE DEALER BASED ON FINAL FURNITURE LAYOUT. FURNITURE PLANS ARE FOR REFERENCE ONLY. DEALER TO PROVIDE DRAWINGS WITH ALL DIMENSIONS VERIFIED IN FIELD PRIOR TO INSTALLATION.

C. GOVERNMENT TO BE NOTIFIED OF ANY DISCREPANCIES OR INTERFERENCES THAT WOULD REQUIRE CHANGES TO THE LAYOUT SHOWN.

D. AN EQUIVALENT MANUFACTURER SUBMITTED MUST MATCH PERFORMANCE & FUNCTIONAL ASPECTS, DIMENSION, QUALITY OF CONSTRUCTION, WARRANTY, COLOR AND FINISH OF THE REFERENCED BASIS OF DESIGN MANUFACTURER. REFER TO THE FF&E SPECIFICATION PACKAGE FOR DETAILS.

E. COORDINATE ELECTRICAL, PLUMBING AND AUDIO-VISUAL REQUIREMENTS WITH FURNITURE SPECIFICATIONS.

G. BLOCKING MUST BE PROVIDED IN WALLS FOR ALL WALL MOUNTED ITEMS AND INCLUDES ITEMS REQUIRING ANCHORAGE TO MEET SEISMIC REQUIREMENTS. FF&E 6'-0" TALL AND OVER OR WEIGHING MORE THAN 400 LBS MUST BE ANCHORED TO FLOOR AND/OR WALL.

(#) SHEET KEYNOTES

1. CHARGING CELL PHONE LOCKERS.
2. SERVER CABINETS AND CLEARANCE AREA. REFER TO TELECOM.
3. PROVIDE (1) AC04 AND (1) AC05 AT EACH WORKSTATION.

LEGEND

XXX — TYPE MARK

(#) — QUANTITY PER ROOM

FF&E CFCI

AC01	WALL CLOCK, BATTERY
AC02	WASTE RECEPTACLE
AC03	RECYCLING RECEPTACLE
AC04	TRASH RECEPTACLE, SMALL
AC05	RECYCLING RECEPTACLE, SMALL
AC06	MARKERBOARD, 48" X 36"
AP01	MICROWAVE
AP02	REFRIGERATOR, PLUMBED
AP03	COFFEE MAKER, PLUMBED
CC01	CHAIR, CONFERENCE
CG01	CHAIR, GUEST
CS01	CHAIR, STOOL
CT01	CHAIR, EXECUTIVE TASK
CT02	CHAIR, TASK
DC01	CURVED CONSOLE
DL01	L SHAPED DESK
SC01	STORAGE CABINET
SC02	ESD STORAGE CABINET
SC03	STORAGE CABINET - 40" H
TB01	TABLE, BREAK
TN01	WORK BENCH
TN02	ESD WORK BENCH
TT01	TABLE, TRAINING
WS01	WORKSTATION 78" X 78"
WS02	WORKSTATION 78" X 78" - ENCLOSED

FF&E GFGI

AV01	84" LCD TV/MONITOR SCREEN
EQ01	MULTI-FUNCTION PRINTER/COPIER
EQ02	SHREDDER
S1	SAFE

GRAPHIC SCALE(S)

0 4' 8' 16' 24'

SCALE: 1/8" = 1'-0"

PLAN NORTH

LICENSED ARCHITECT — DONALD WINSTEAD — No. ARC.2020039 — 05-08-26 — STATE OF OHIO

MARK	DESCRIPTION	DATE

DESIGNED BY: M. WARRINER
DRAWN BY: M. WALTERS
CHECKED BY: B. ERNSTING
SUBMITTED BY: D. PEARSON
SIZE: ANSI D
ISSUE DATE: MAY 2026
ANG PROJECT NO.: PBXP222050
CONTRACT NO.: FA8903-21-D-0008
TASK ORDER NO.: W50S8R23F0009

OHIO AIR NATIONAL GUARD
MANSFIELD LAHM AIR NATIONAL GUARD BASE, OH

JACOBS GOVERNMENT SERVICES
2600 MICHELSON SR, STE 500
IRVINE, CA 92612

MANSFIELD LAHM AIR NATIONAL GUARD BASE, OH
REPAIR B403 FOR CYBER
FA877006
INTERIORS FF&E PLAN

SHEET ID
IF101

TYPE B-3 FINAL

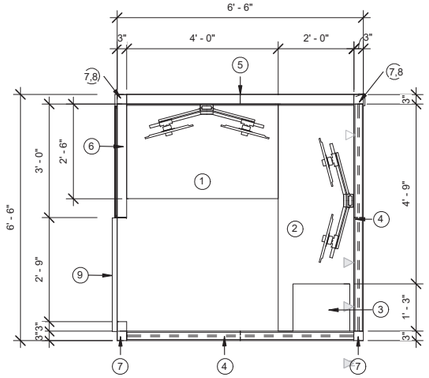

1. 48" W x 30" D WORKSURFACE WITH DUAL MONITOR ARM
2. 72" W x 24" D WORKSURFACE WITH DUAL MONITOR ARM
3. 15" W x 24" D x 24" H BOX / BOX / FILE
4. (2) 36" W x 3" D x 48" H PANEL WITH 16" H FRAMELESS GLASS TOP PANEL
5. (2) 36" W x 3" D x 64" H PANEL WITH 36" W X 18" H SOLID STACK PANEL
6. (1) 36" W x 3" D x 64" H PANEL WITH 36"W X 18"H SOLID STACK PANEL
7. 3" W x 3" D x 64" H PANEL POST
8. 3" W X 3" D x 18" H PANEL POST
9. 36" W x 82" H FROSTED GLASS DOOR

NOTE: ELECTRICAL SEPARATION OF 40" AS REQUIRED

D1 WS02 TYPICAL

SCALE 1/2" = 1'-0"

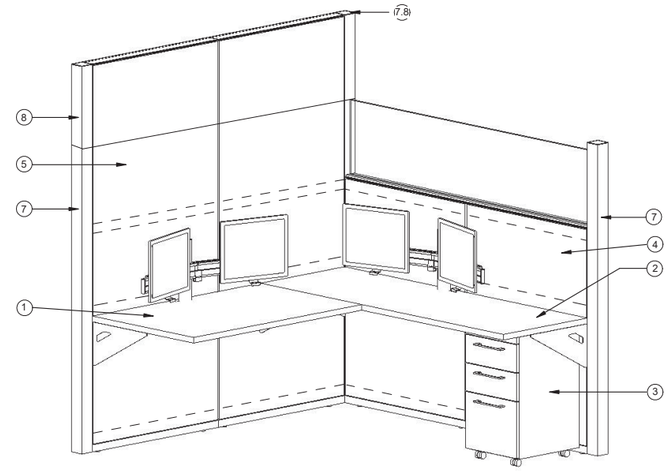

FRONT PANELS NOT INCLUDED FOR VISIBILITY
REFERENCE D1 FOR LEGEND

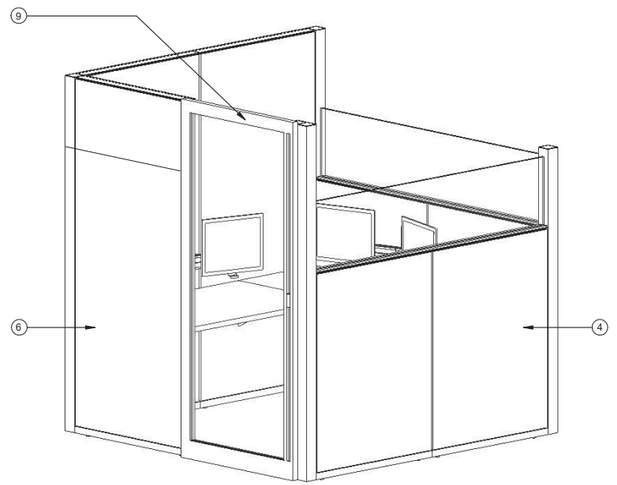

FRONT PANELS AND DOOR INCLUDED
REFERENCE D1 FOR LEGEND

D3 WS02 AXONOMETRIC VIEWS

SCALE 1/2" = 1'-0"

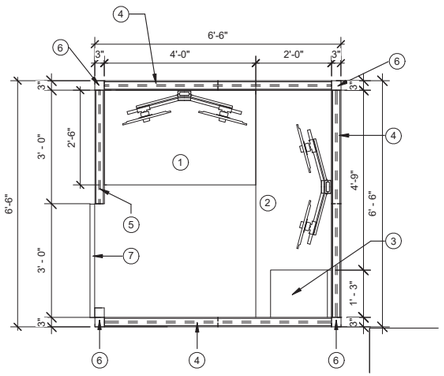

1. 48" W x 30" D WORKSURFACE WITH DUAL MONITOR ARM
2. 72" W x 24" D WORKSURFACE WITH DUAL MONITOR ARM
3. 15" W x 24" D x 24" H BOX / BOX / FILE
4. 78" W x 3" D x 48" H PANEL WITH 16" H FRAMELESS GLASS TOP PANEL
5. 36" W x 3" D x 48" H PANEL WITH 16" H FRAMELESS GLASS TOP PANEL
6. 3" W x 3" D x 65" H PANEL POST
7. 36" W x 65" H FROSTED GLASS DOOR
8. ELECTRICAL SEPARATION OF 40" AS REQUIRED

A1 WS01 TYPICAL

SCALE 1/2" = 1'-0"

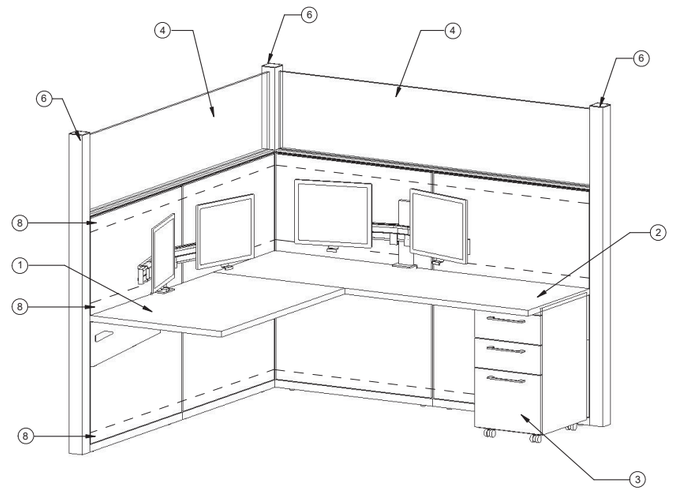

FRONT PANELS NOT INCLUDED FOR VISIBILITY
REFERENCE A1 FOR LEGEND

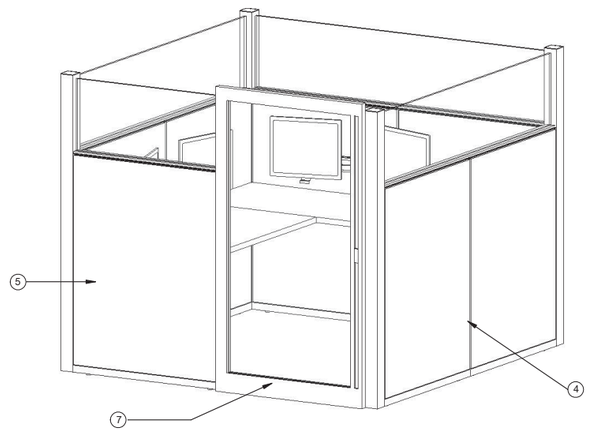

FRONT PANELS AND DOOR INCLUDED
REFERENCE A1 FOR LEGEND

A3 WS01 AXONOMETRIC VIEWS

SCALE 1/2" = 1'-0"

DONALD WINSTEAD
No. ARC.2020028
05-08-26
LICENSED ARCHITECT
STATE OF OHIO

MARK	DESCRIPTION	DATE

DESIGNED BY:	ISSUE DATE:
M. WARRINER	MAY 2026
DRAWN BY:	ANG PROJECT NO.:
M. WALTERS	PBXP222050
CHECKED BY:	CONTRACT NO.:
B. ERNSTING	FA8803-21-D-0008
SUBMITTED BY:	TASK ORDER NO.:
D. PEARSON	W50S8R23P30009
SIZE:	
ANSI D	

OHIO AIR NATIONAL GUARD
MANSFIELD LAHM AIR NATIONAL GUARD BASE, OH

JACOBS GOVERNMENT SERVICES
2600 MICHELSON SR. STE 500
IRVINE, CA 92612

MANSFIELD LAHM AIR NATIONAL GUARD BASE, OH
REPAIR B403 FOR CYBER
FA877006
WORKSTATION TYPICALS

SHEET ID

IF401

TYPE B-3 FINAL

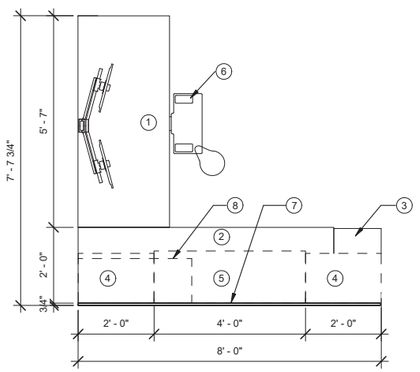

1. 67" W x 29" D HEIGHT ADJUSTABLE WORKSURFACE WITH DUAL MONITOR ARM
2. 81" W x 24" D WORKSURFACE
3. 15" W x 24" D x 51" H BOX / BOX / FILE WITH UPPER CABINET
4. 24" W x 16" D x 16" H OVERHEAD OPEN STORAGE (WALL MOUNT)
5. 48" W x 16" D x 16" H OVERHEAD FLIP TOP STORAGE (WALL MOUNT)
6. KEYBOARD TRAY
7. 24" W x 22" H (2) and 48" W x 22"H WALL MOUNTED TACKPANEL
8. 36" W x 14" D x 27" H BOOKCASE

A1 DL01 TYPICAL
SCALE 1/2" = 1'-0"

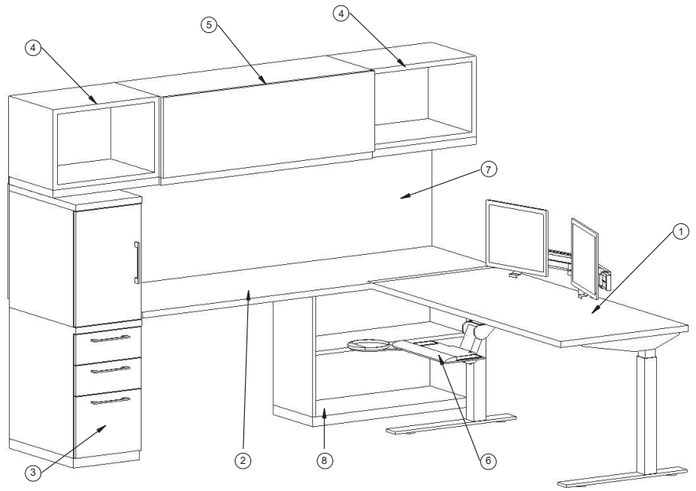

A3 DL01 AXONOMETRIC VIEW
SCALE 1/2" = 1'-0"

LICENSED ARCHITECT
DONALD WINSTEAD
No. ARC.2020039
05-08-26
STATE OF OHIO

MARK	DESCRIPTION	DATE

DESIGNED BY: M. WARRINER
DRAWN BY: M. WALTERS
CHECKED BY: B. ERNSTING
SUBMITTED BY: S. PEARSON
SIZE: ANSI D
ISSUE DATE: MAY 2026
ANG PROJECT NO.: PBXP222050
CONTRACT NO.: FA8903-21-D-0008
TASK ORDER NO.: W50S8R23F0009

OHIO AIR NATIONAL GUARD
MANSFIELD LAHM AIR NATIONAL GUARD BASE, OH

JACOBS GOVERNMENT SERVICES
2600 MICHELSON SR, STE 500
IRVINE, CA 92812

MANSFIELD LAHM AIR NATIONAL GUARD BASE, OH
REPAIR B403 FOR CYBER
FA877006
DESK TYPICALS

SHEET ID
IF402

TYPE B-3 FINAL

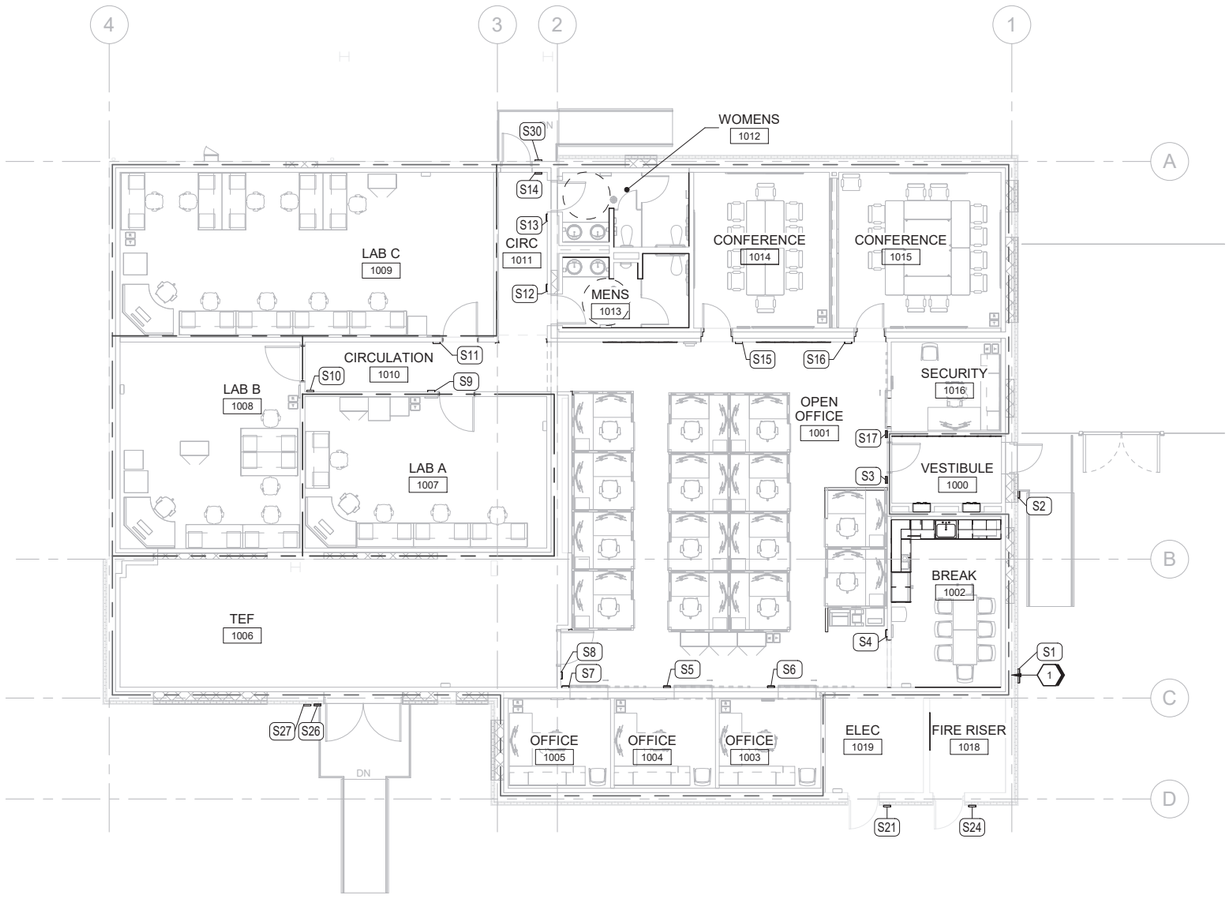

A1 GROUND FLOOR SIGNAGE PLAN

SCALE 1/8" = 1'-0"

GENERAL SHEET NOTES

A. ROOM NAMES FOR SIGNAGE TO BE VERIFIED WITH USER BEFORE INSTALLATION. CONFIRM FINAL ROOM NAMES AND NUMBERS WITH CONTRACTING OFFICER PRIOR TO ORDERING. SIGNAGE TO COMPLY WITH THE ARCHITECTURAL BARRIERS ACT.

B. SIGNS TO BE MOUNTED ACCORDING TO MANUFACTURER'S INSTALLATION INSTRUCTIONS.

C. REFER TO SHEET IG601 FOR SIGNAGE SCHEDULE AND DETAILS.

D. ALL RAISED CHARACTERS ARE BETWEEN 5/8" MIN TO 2" MAX IN HEIGHT & MADE IN CONTRASTING COLOR TO THE BACKGROUND. FONT MUST BE SANS-SERIF / UPPERCASE. ALL BRAILLE IS ENGLISH.

E. ALL RAISED CHARACTERS, BRAILLE AND PICTOGRAMS TO BE LOCATED BETWEEN 48" AND 60" AFF. TO BASELINE OF TEXT.

F. ALL CHARACTERS & BRAILLE MUST BE RAISED 1/32" ROUNDED EDGES.

G. WHERE A SIGN IS PROVIDED AT A DOOR, INSTALL ON LATCH SIDE. SIGNS ON DOUBLE DOORS WITH TWO ACTIVE LEAFS MUST BE AT THE RIGHT SIDE OF THE RIGHT HAND DOOR. SIGNS ON DOUBLE DOORS WITH AN INACTIVE LEAF ARE TO BE INSTALLED ON INACTIVE LEAF. MOUNT ON NEAREST ADJACENT WALL WHERE THERE IS INSUFFICIENT WIDTH AT DOOR.

H. FOR SIGNS MOUNTED ON GLAZING OR TRANSPARENT PARTITIONS INSTALL AN EQUAL SIZE BLANK SIGN ON OPPOSITE SIDE OF PARTITION.

I. SUBMIT ALL SIGNS WITH SHOP DRAWINGS AND LOCATIONS PER PLANS FOR APPROVAL OF GRAPHICS AND TEXT PRIOR TO CONSTRUCTION. PROVIDE FINISHED SAMPLE OF TYPICAL ROOM SIGN W/ INSERT PRINTED FOR APPROVAL.

⟨#⟩ SHEET KEYNOTES

1. EXTERIOR BUILDING NUMBER SIGN REFER TO ARCHITECTURE F1/A201 FOR LOCATION

GRAPHIC SCALE(S)

PLAN NORTH

0 4' 8' 16' 24'

SCALE: 1/8" = 1'-0"

LICENSED ARCHITECT
DONALD WINSTEAD
No. ARC.2020029
05-08-26
STATE OF OHIO

MARK	DESCRIPTION	DATE

DESIGNED BY: M. WARRINER
DRAWN BY: M. WALTERS
CHECKED BY: B. ERNSTING
SUBMITTED BY: D. PEARSON
DATE: ANSI D

OHIO AIR NATIONAL GUARD
MANSFIELD LAHM AIR NATIONAL GUARD BASE, OH

JACOBS GOVERNMENT SERVICES
2600 MICHELSON SR, STE 500
IRVINE, CA 92612

ISSUE DATE: MAY 2026
ANG PROJECT NO.: PBXP222050
CONTRACT NO.: FA8803-21-D-0008
TASK ORDER NO.: W50SBR23F0009

MANSFIELD LAHM AIR NATIONAL GUARD BASE, OH
REPAIR B403 FOR CYBER
FA877006
INTERIORS SIGNAGE PLAN

SHEET ID
IG101

TYPE B-3 FINAL

B403

1'-4"

BUILDING SIGN - EXTERIOR
INDIVIDUAL LETTERS AND NUMBERS
BLACK
HELVETICA NEUE HEAVY FONT, 1'-4" HIGH

REFER TO ARCHITECTURE FOR LOCATION AND MOUNTING HEIGHT.

F1 EXTERIOR BUILDING NUMBER G

SCALE 1/2" = 1'-0"

SIGNAGE SCHEDULE

SIGN	ROOM NAME	ROOM NUMBER	VERBIAGE	SIGN TYPE	SIGN STYLE
S1	BREAK	1002	B403	G	EXTERIOR
S2	VESTIBULE	1000	NO SMOKING - REFER TO DETAIL	E	EXTERIOR
S3	VESTIBULE	1000	EXIT	F	INTERIOR
S4	BREAK	1002	BREAK	A.i	INTERIOR
S5	OFFICE	1004	OFFICE	A.i	INTERIOR
S6	OFFICE	1003	OFFICE	A.i	INTERIOR
S7	OFFICE	1005	OFFICE	A.i	INTERIOR
S8	TEF	1006	TEF	A.i	INTERIOR
S9	LAB A	1007	LAB A	A.i	INTERIOR
S10	LAB B	1008	LAB B	A.i	INTERIOR
S11	LAB C	1009	LAB C	A.i	INTERIOR
S12	MENS	1013	MENS	D2	INTERIOR
S13	WOMENS	1012	WOMENS	D1	INTERIOR
S14	CIRC	1011	EXIT	F	INTERIOR
S15	CONFERENCE	1014	CONFERENCE	C	INTERIOR
S16	CONFERENCE	1015	CONFERENCE	C	INTERIOR
S17	VESTIBULE	1000	SECURITY	A.i	INTERIOR
S21	ELEC	1019	ELECTRICAL	A	EXTERIOR
S24	FIRE RISER	1018	FIRE RISER	A	EXTERIOR
S26	TEF	1006	TEF	A	EXTERIOR
S27	TEF	1006	NO SMOKING - REFER TO DETAIL	E	EXTERIOR
S30	CIRC	1011	NO SMOKING - REFER TO DETAIL	E	EXTERIOR

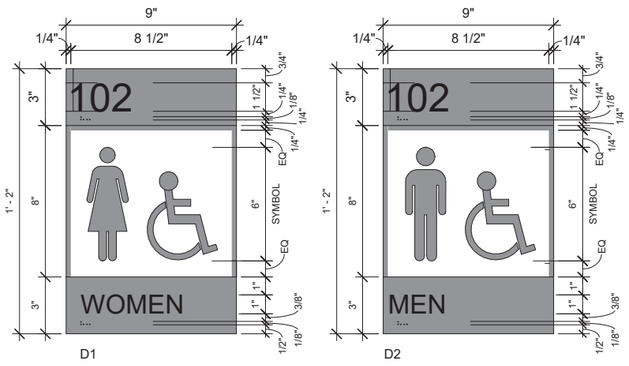

D1 D2

ROOM NUMBER: HELVETICA NEUE 55 ROMAN, 1-1/2" TACTILE ROOM NUMBER WITH GRADE TWO BRAILLE.

UPPER CASE HELVETICA NEUE 55 ROMAN, 1" CAPITAL LETTER HEIGHT, FLUSH LEFT, ACCOMPANIED BY GRADE TWO BRAILLE.

C1 RESTROOM IDENTIFICATION SIGN D

SCALE NTS

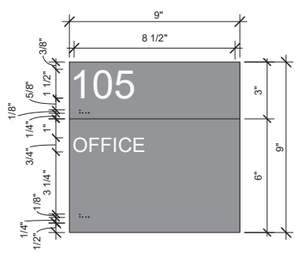

ROOM NUMBER: HELVETICA NEUE 55 ROMAN, 1-1/2" CAPITAL LETTER HEIGHT, FLUSH LEFT, TACTILE ROOM NUMBER ACCOMPANIED BY GRADE TWO BRAILLE

ROOM NAME: HELVETICA NEUE 55 ROMAN, 3/4" CAPITAL LETTER HEIGHT, FLUSH LEFT. TACTILE ROOM NAME WITH GRADE TWO BRAILLE.
NOTE: .i TYPE DESIGNATOR INDICATES INTERIOR MOUNTING

A1 PERMANENT ROOM IDENTIFICATION SIGN A

SCALE 3" = 1'-0"

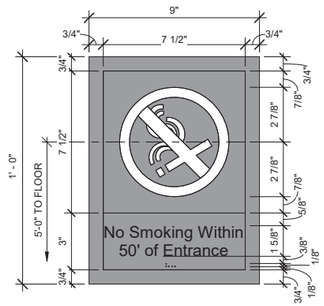

SERVICE NAME: UPPER CASE HELVETICA MEDIUM, 5/8" CAPITAL LETTER HEIGHT, CENTERED, ACCOMPANIED BY GRADE TWO BRAILLE, WHITE LETTERS AND SYMBOL ON COLORED BACKGROUND TO MATCH EXTERIOR BUILDING COLORS.

C4 REGULATORY SIGN E

SCALE 3" = 1'-0"

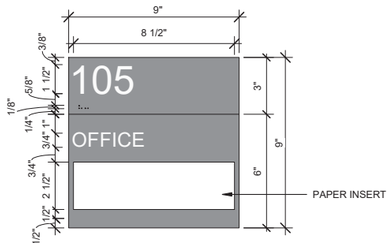

ROOM NUMBER: HELVETICA NEUE 55 ROMAN, 1 1/2" CAPITAL LETTER HEIGHT, FLUSH LEFT, TACTILE ROOM NUMBER ACCOMPANIED BY GRADE TWO BRAILLE

ROOM NAME: PRINTED PAPER INSERT WITH ROOM DESCRIPTION. UPPER AND LOWER CASE HELVETICA NEUE 55 ROMAN, 3/4" CAPITAL LETTER HEIGHT, FLUSH LEFT.

A4 ROOM IDENTIFICATION SIGN B

SCALE 3" = 1'-0"

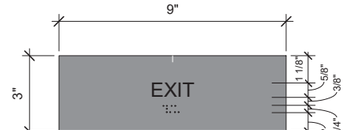

TEXT: HELVETICA NEUE 55 ROMAN, 3/4" INCH CAPITAL LETTER HEIGHT, CENTERED, TACTILE ROOM NUMBER ACCOMPANIED BY GRADE TWO BRAILLE

C6 EXIT DOOR TACTILE IDENTIFICATION SIGN F

SCALE NTS

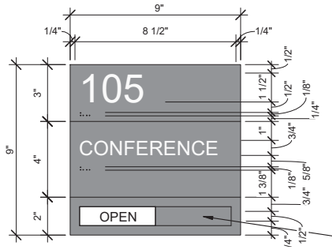

SLIDING PANEL
VERBIAGE: "OPEN" (LEFT) "IN USE" (RIGHT)

TEXT: HELVETICA NEUE 55 ROMAN, 1/2" CAPITAL LETTER HEIGHT, CENTERED.

ROOM NUMBER: HELVETICA NEUE 55 ROMAN, 1-1/2" CAPITAL LETTER HEIGHT, FLUSH LEFT, TACTILE ROOM NUMBER ACCOMPANIED BY GRADE TWO BRAILLE

ROOM NAME: HELVETICA NEUE 55 ROMAN, 3/4" CAPITAL LETTER HEIGHT, FLUSH LEFT. TACTILE ROOM NAME WITH GRADE TWO BRAILLE.

A6 CONFERENCE IDENTIFICATION SIGN C

SCALE 3" = 1'-0"

LICENSED ARCHITECT
DONALD WINSTEAD
No. ARC.2520020
05-08-26
STATE OF OHIO

MARK	DESCRIPTION	DATE

DESIGNED BY: M. WARRINER
DRAWN BY: M. WALTERS
CHECKED BY: B. ERNSTING
SUBMITTED BY: D. PEARSON
ANSI D

ISSUE DATE: MAY 2026
ANG PROJECT NO.: PBXP222050
CONTRACT NO.: FA8903-21-D-0008
TASK ORDER NO.: W50S8R23F0009

OHIO AIR NATIONAL GUARD
MANSFIELD LAHM AIR NATIONAL GUARD BASE, OH

JACOBS GOVERNMENT SERVICES
2600 MICHELSON SR, STE 500
IRVINE, CA 92612

MANSFIELD LAHM AIR NATIONAL GUARD BASE, OH
REPAIR B403 FOR CYBER
FA877006
INTERIORS SIGNAGE SCHEDULE AND DETAILS

SHEET ID
IG601

TYPE B-3 FINAL

FIRE ALARM GENERAL NOTES

A. DEMOLISH ALL EXISTING FIRE ALARM DEVICES, PANELS, WIRE AND CONDUIT AND PROVIDE A COMPLETE NEW FIRE ALARM/MASS NOTIFICATION SYSTEM THROUGHOUT THE BUILDING. PERFORM DESIGN AND INSTALLATION WORK IN ACCORDANCE WITH NFPA 72, UFC 3-600-01, UFC 4-021-01, ANGETL 24-01-03, AND SPECIFICATION 28 31 76.

B. RUN WIRING IN MINIMUM 3/4 INCH CONDUIT (EMT MINIMUM). EXCEPTION: 1/2 INCH CONDUIT MAY BE USED FOR WHEN SERVING A SINGLE DEVICE.

C. SYNCHRONIZE ALL VISUAL NOTIFICATION APPLIANCES. SYNCHRONIZE ALL AUDIBLE NOTIFICATION APPLIANCES.

D. PROVIDE A COMBINATION INTELLIGENT, ADDRESSABLE FIRE ALARM/MASS NOTIFICATION CONTROL PANEL (FMCP) WITH RADIO TRANSMITTER TO TRANSMIT FIRE ALARM, TROUBLE, SUPERVISORY, AND WATER FLOW SIGNALS TO THE EXISTING MONACO D-21 FOR MONITORING.

E. PROVIDE POWER LIMITED CIRCUITS.

F. DO NOT LOCATE DETECTORS IN DIRECT AIR OR CLOSER THAN 3FT FROM AN AIR SUPPLY OR RETURN DIFFUSER.

G. PROVIDE CONNECTIONS TO THE LIGHT AND POWER SERVICE IN ACCORDANCE WITH NFPA 72.

H. PROVIDE CLASS B SIGNALING LINE CIRCUITS (SLC), INITIATING DEVICE CIRCUITS (IDC), AND NOTIFICATION APPLIANCE CIRCUITS (NAC).

I. PROVIDE FIBER OPTIC CONNECTION BETWEEN THE MAIN FMCP AND THE SUBPANELS (FMSP) LOCATED WITHIN THE SECURE BOUNDARIES. FIRE ALARM CONNECTIONS ACROSS THE MAIN SECURE BOUNDARY MUST BE VIA FIBER. NO COPPER WIRE MAY CROSS THE MAIN SECURE BOUNDARY. NO COPPER WIRE FOR SPEAKER CIRCUITS MAY CROSS THE SECURE BOUNDARIES IN EACH LAB. ALL SPEAKERS IN LABS MUST BE SERVED BY A DEDICATED FMSP IN THE LAB WHICH IS FIBER CONNECTED BACK TO FMSP IN THE SECURITY OFFICE.

J. PROVIDE TEXT SIGNS OVER EACH SUBSTANTIAL MEANS OF EGRESS FROM THE LEVEL OF DISCHARGE. TEXT SIGN MUST READ "EVACUATION" OR "ANNOUNCEMENT" MESSAGE FOR A CONTINUOUS TEN (10) SECONDS AFTER THE END OF MESSAGE.

K. PROVIDE STROBES AND SPEAKER/STROBES THROUGHOUT THE BUILDING. STROBES MUST FEATURE CLEAR LENS AND BE MARKED WITH "ALERT". SPEAKERS ARE TO BE SHARED BY THE MASS NOTIFICATION SYSTEM AND FIRE ALARM SYSTEMS FOR AUDIBLE NOTIFICATION. PROVIDE ADDITIONAL SPEAKERS AND STROBES AS NECESSARY TO MEET THE AUDIBILITY AND INTELLIGIBILITY REQUIREMENTS OF NFPA 72, UFC-4-021-01, AND THE MASS NOTIFICATION SYSTEM DESIGN CRITERIA.

L. UPON ACTIVATION OF THE MASS NOTIFICATION SYSTEM, TEMPORARILY DEACTIVATE FIRE ALARM SYSTEM NOTIFICATION DEVICES DURING EMERGENCY VOICE MESSAGING. FIRE SIGNAL TRANSMISSION TO THE BASE REPORTING STATION IS TO REMAIN FUNCTIONAL. IF NOT MANUALLY ENDED, THE MASS NOTIFICATION SYSTEM MESSAGE WILL AUTOMATICALLY STOP AFTER 10 MINUTES. REACTIVATE THE FIRE ALARM AUDIBLES WHEN THE MESSAGE IS COMPLETED.

M. THE SOUND POWER OF AUDIBLE NOTIFICATION DEVICES MUST BE 15 DBA OVER AMBIENT CONDITIONS OR 5 DBA ABOVE THE MAXIMUM SOUND LEVEL HAVING A DURATION OF AT LEAST 60 SECONDS WHICHEVER IS GREATER, MEASURED AT 5 FEET ABOVE THE FLOOR.

N. THESE DOCUMENTS DEPICT A PERFORMANCE LEVEL ENGINEERING DESIGN LAYOUT TO BE UTILIZED AS GUIDANCE FOR THE PLANNING OF THE FIRE ALARM AND MASS NOTIFICATION SYSTEM BY THE CONTRACTOR. THE CONTRACTOR IS RESPONSIBLE FOR DETERMINING THE FINAL QUANTITY AND LOCATION OF ALL DEVICES IN ACCORDANCE WITH ALL APPLICABLE CODES AND STANDARDS, MANUFACTURER'S WRITTEN RECOMMENDATIONS, SPECIFICATIONS, AND CONTRACT DRAWINGS. PROVIDE ADDITIONAL DEVICES AS NECESSARY FOR A COMPLETE AND FUNCTIONAL FIRE ALARM SYSTEM AS REQUIRED BY UFC 3-600-01, UFC 4-021-01, UFC 4-211-01, AND NFPA 72. PROVIDE COMPLETE DOCUMENTS FOR REVIEW AND APPROVAL FROM THE QFPE AND THE AUTHORITY HAVING JURISDICTION PRIOR TO INSTALLATION. INCLUDE SHOP DRAWINGS, CALCULATIONS, AND ANY ADDITIONAL EQUIPMENT NECESSARY, INCLUDING INITIATING DEVICES AND NOTIFICATION APPLIANCES, TO PROVIDE A COMPLETE INSTALLATION AND COMPLY WITH LOCAL CODES AND AMENDMENTS. PROVIDE COMPLETE VOLTAGE DROP AND BATTERY CALCULATIONS IN ACCORDANCE WITH NFPA 72. PROVIDE ADDITIONAL CIRCUITS AND/OR BATTERIES WHERE NECESSARY FOR COMPLIANCE WITH NFPA 72 AND THE SPECIFICATIONS.

O. DUCT DETECTION MUST BE PROVIDED ON THE SUPPLY SIDE OF ANY AIR SUPPLY SYSTEM HAVING A CAPACITY GREATER THAN 2,000 CFM.

MASS NOTIFICATION GENERAL NOTES

A. FIRE ALARM AUDIBLE NOTIFICATION MUST BE PROVIDED FOR ALL AREAS AND ROOMS THROUGHOUT THE BUILDING. PROVIDE SPEAKERS AND SPEAKER/STROBES AS NECESSARY TO MEET INTELLIGIBILITY REQUIREMENTS OF NFPA 72, UFC 4-021-01, AND THE FOLLOWING CRITERIA. THE CRITERIA MUST BE MET WITH ALL DOORS AND WINDOWS CLOSED. WHERE THE CRITERIA CANNOT BE MET DURING SYSTEM ACCEPTANCE TESTING, THE CONTRACTOR MUST PROVIDE ADDITIONAL DEVICES AS NECESSARY TO MEET THE CRITERIA AT NO ADDITIONAL COST.

B. ALL ROOMS MUST BE CONSIDERED NORMALLY OCCUPIED EXCEPT FOR ELECTRICAL, TEF, AND FIRE ROOM. IN NORMALLY OCCUPIED ROOMS OR AREAS, ENSURE A MINIMUM CIS VALUE OF 0.80 IS ACHIEVED. MEASUREMENTS MUST BE TAKEN AT HEAD LEVEL, APPROXIMATELY 5 FEET ABOVE THE FINISHED FLOOR IN THE MOST REMOTE PORTION OF THE ROOM.

C. NORMALLY UNOCCUPIED AREAS ARE PERMITTED TO HAVE A CIS SCORE LESS THAN THE MINIMUM REQUIRED, PROVIDED THAT OCCUPANTS TRAVEL NO MORE THAN 50 FEET TO FIND A LOCATION WITH AT LEAST THE MINIMUM REQUIRED VALUE.

D. IN NORMALLY OCCUPIED ROOMS, ENSURE A CIS SCORE GREATER THAN THE MINIMUM REQUIRED 0.80 CIS ACHIEVED. ROUNDING IS PERMITTED SUCH THAT A VALUE OF 0.75 MAY BE ROUNDED TO 0.80.

E. IN NORMALLY OCCUPIED ROOMS WITH HARD WALL AND CEILING SURFACES SUCH AS METAL OR CONCRETE, OCCUPANTS MAY TRAVEL NO MORE THAN 33 FEET TO FIND A LOCATION WITH AT LEAST THE MINIMUM REQUIRED CIS VALUE.

F. THE DISTANCE THE OCCUPANT MUST TRAVEL TO A LOCATION WITH THE MINIMUM REQUIRED CIS VALUE MUST BE ALONG THE CENTERLINE OF NATURAL PATH OF TRAVEL. MEASUREMENTS AROUND CORNERS OR OBSTRUCTIONS REQUIRE A MINIMUM OF 1 FOOT OF CLEARANCE. THE MEASURED DISTANCE MUST TERMINATE AT THE LOCATION WHERE THE MINIMUM REQUIRED CIS VALUE HAS BEEN ACHIEVED.

G. EXTERIOR MASS NOTIFICATION LOUDSPEAKERS MUST HAVE A MINIMUM CIS SCORE OF 0.80 MEASURED AT 16 FEET FROM THE SPEAKER. STROBES ARE TO BE ACTIVATED IN CONJUNCTION WITH TRANSMISSION OF LIVE OR PRE-RECORDED MESSAGES. STROBES TO OPERATE FOR THE DURATION OF PRE-RECORDED MESSAGES AND NOT LESS THAN 15 SECONDS AFTER LIVE MESSAGES END.

PENETRATION OF SECURE BOUNDARY OR STC RATED PARTITIONS:

VARIOUS SECURITY ZONES ARE IDENTIFIED FOR USE THROUGHOUT THIS FACILITY ON ARCHITECTURE DRAWINGS . DO NOT CROSS SECURITY ZONES UNLESS SPECIFICALLY IDENTIFIED. ARCHITECTURAL DRAWINGS IDENTIFY THE STC RATINGS FOR ALL WALLS, PIPING, CONDUIT, AND DEVICE BOX PENETRATIONS IN SOUND RATED WALLS MUST BE MINIMIZED AND, WHERE REQUIRED, MUST BE TREATED TO MAINTAIN THE RATING OF THE ASSEMBLY. DEVICE BOXES MOUNTED ON OPPOSITE SIDES OF A RATED WALL MUST BE STAGGERED IN THE HORIZONTAL DIRECTION BY A MINIMUM OF 24 INCHES CENTER TO CENTER, MUST NOT SHARE THE SAME WALL STUD SPACE, AND MUST NOT BE MOUNTED BACK-TO-BACK IN ORDER TO MAINTAIN THE PARTITION STC RATING. WALL-MOUNTED DEVICES AND DEVICE BOXES MUST NOT BE MOUNTED ON A PARTITION IDENTIFIED AS A SECURITY BOUNDARY. BOTH SIDES OF THE PENETRATION MUST BE SEALED WITH AN ACOUSTICAL FOAM OR SEALANT FINISHED TO MATCH THE WALL THAT IS BEING PENETRATED. WHERE MULTIPLE PENETRATIONS ARE REQUIRED, THEY MUST BE GROUPED TOGETHER. SEE FA501 FOR SECURE CONDUIT PENETRATION DETAIL .

ANTICIPATED AVERAGE AMBIENT SOUND LEVEL

SPACE	ANTICIPATED AVERAGE AMBIENT SOUND LEVEL(dBA)	REFERENCE
OFFICES, BATHROOMS, LABS, VESTIBULES	54	NFPA 72 TABLE A.18.4.4
BREAKROOMS AND CONFERENCE ROOMS	60	NFPA 72 TABLE A.18.4.4
TEF, ELEC ROOM, FIRE RISER ROOM	67	

FIRE ALARM/MASS NOTIFICATION SYMBOLS

- FMCP — COMBINATION FIRE ALARM/MASS NOTIFICATION CONTROL PANEL
- FMSP — FIRE ALARM/MASS NOTIFICATION SECURE PANEL
- AASD — AIR ASPIRATING SMOKE DETECTOR
- APS — AUXILIARY POWER SUPPLY
- FAT — FIRE ALARM/MASS NOTIFICATION TRANSCEIVER
- LOC — MASS NOTIFICATION LOCAL OPERATING CONSOLE
- AMP — AMPLIFIER PANEL
- RPS — NOTIFICATION APPLIANCE REMOTE POWER SUPPLY
- VTD — MASS NOTIFICATION EMERGENCY LED TEXTUAL DISPLAY
- BAT — SECONDARY POWER SUPPLY (BATTERY)
- SPD — SURGE PROTECTIVE DEVICE
- EOL — END OF LINE RESISTOR
- CEILING-MOUNTED FIRE ALARM/MASS NOTIFICATION SPEAKER
- XX — CEILING-MOUNTED FIRE ALARM/MASS NOTIFICATION SPEAKER/STROBE
- XX — CEILING-MOUNTED FIRE ALARM/MASS NOTIFICATION STROBE
- WALL-MOUNTED FIRE ALARM/MASS NOTIFICATION SPEAKER
- WP — EXTERIOR WEATHERPROOF MASS NOTIFICATION LOUDSPEAKER
- XX — WALL-MOUNTED FIRE ALARM/MASS NOTIFICATION SPEAKER STROBE
- B XX — WALL-MOUNTED FIRE ALARM SPEAKER/STROBE WITH BLUE LENS AND WHITE FACEPLATE MARKED "ALERT"
- XX — WALL-MOUNTED FIRE ALARM/MASS NOTIFICATION STROBE
- P — MANUAL FIRE ALARM PULL STATION
- S — MANUAL SMOKE EVACUATION CONTROL STATION
- ADDRESSABLE PHOTOELECTRIC SMOKE DETECTOR
- R — RETURN SIDE IN-DUCT ADDRESSABLE PHOTOELECTRIC SMOKE DETECTOR
- S — SUPPLY SIDE IN-DUCT ADDRESSABLE PHOTOELECTRIC SMOKE DETECTOR
- M — ADDRESSABLE INPUT MONITOR MODULE
- C — ADDRESSABLE OUTPUT CONTROL MODULE
- FS — WATER FLOW SWITCH (PRESSURE TYPE FOR PREACTION SYSTEM AND VANE TYPE FOR WET PIPE SYSTEM)
- TS — TAMPER SWITCH
- LT — LOW TEMPERATURE SENSOR
- RADIO TRANSCEIVER ANTENNA

APPLICABLE CODES AND STANDARDS

APPLICABLE CODES AND STANDARDS	EDITION
UFC 1-200-01 - DoD BUILDING CODE	CHANGE 4, 17 DECEMBER 2024
UFC 3-600-01 - FIRE PROTECTION ENGINEERING FOR FACILITIES	CHANGE 6, 06 MAY 2021
UFC 4-010-01 - MINIMUM ANTITERRORISM STANDARDS FOR BUILDINGS	CHANGE 3, 24 MAY 2024
UFC 4-010-05 - SECURE AREA PLANNING, DESIGN, AND CONSTRUCTION	26 MAY 2023
UFC 4-021-01 - DESIGN AND O&M: MASS NOTIFICATION SYSTEMS	CHANGE 1, 01 JANUARY 2010
NFPA 1 - FIRE CODE	2024
NFPA 72 - NATIONAL FIRE ALARM AND SIGNALING CODE	2025
NFPA 90A - STANDARD FOR THE INSTALLATION OF AIR-CONDITIONING AND VENTILATING SYSTEMS	2024
NFPA 92 - STANDARD FOR SMOKE CONTROL SYSTEMS	2024
NFPA 101 - LIFE SAFETY CODE (LSC)	2024
NFPA 110 - STANDARD FOR EMERGENCY AND STANDBY POWER SYSTEMS	2025
NFPA 170 - STANDARD FOR FIRE SAFETY AND EMERGENCY SYMBOLS	2024
NFPA 220 - STANDARD ON TYPES OF BUILDING CONSTRUCTION	2024
INTERNATIONAL BUILDING CODE (IBC)	2024
TSFPEWG G 3-600-01.01-18	CHANGE 1, 21 APRIL 2021
ANG ETL 24-01-03 FIRE PROTECTION DESIGN GUIDANCE	31 MARCH 2024

STATE OF OHIO — EDWARD PITTS — E-92970 — 05-08-26 — REGISTERED PROFESSIONAL ENGINEER

MARK	DESCRIPTION	DATE

DESIGNED BY: E. PITTS
DRAWN BY: B. MITCHELL
CHECKED BY: B. BUSS
SUBMITTED BY: J. PEARSON
SIZE: ANSI D
ISSUE DATE: MAY 2026
ANG PROJECT NO.: PBXP222050
CONTRACT NO.: FA8803-21-D-0008
TASK ORDER NO.: W50S8R23F0009

OHIO AIR NATIONAL GUARD
MANSFIELD LAHM AIR NATIONAL GUARD BASE, OH

JACOBS GOVERNMENT SERVICES
2600 MICHELSON SR, STE 500
IRVINE, CA 92612

MANSFIELD LAHM AIR NATIONAL GUARD BASE, OH
REPAIR B403 FOR CYBER
FA877006
FIRE ALARM GENERAL NOTES

SHEET ID

FA001

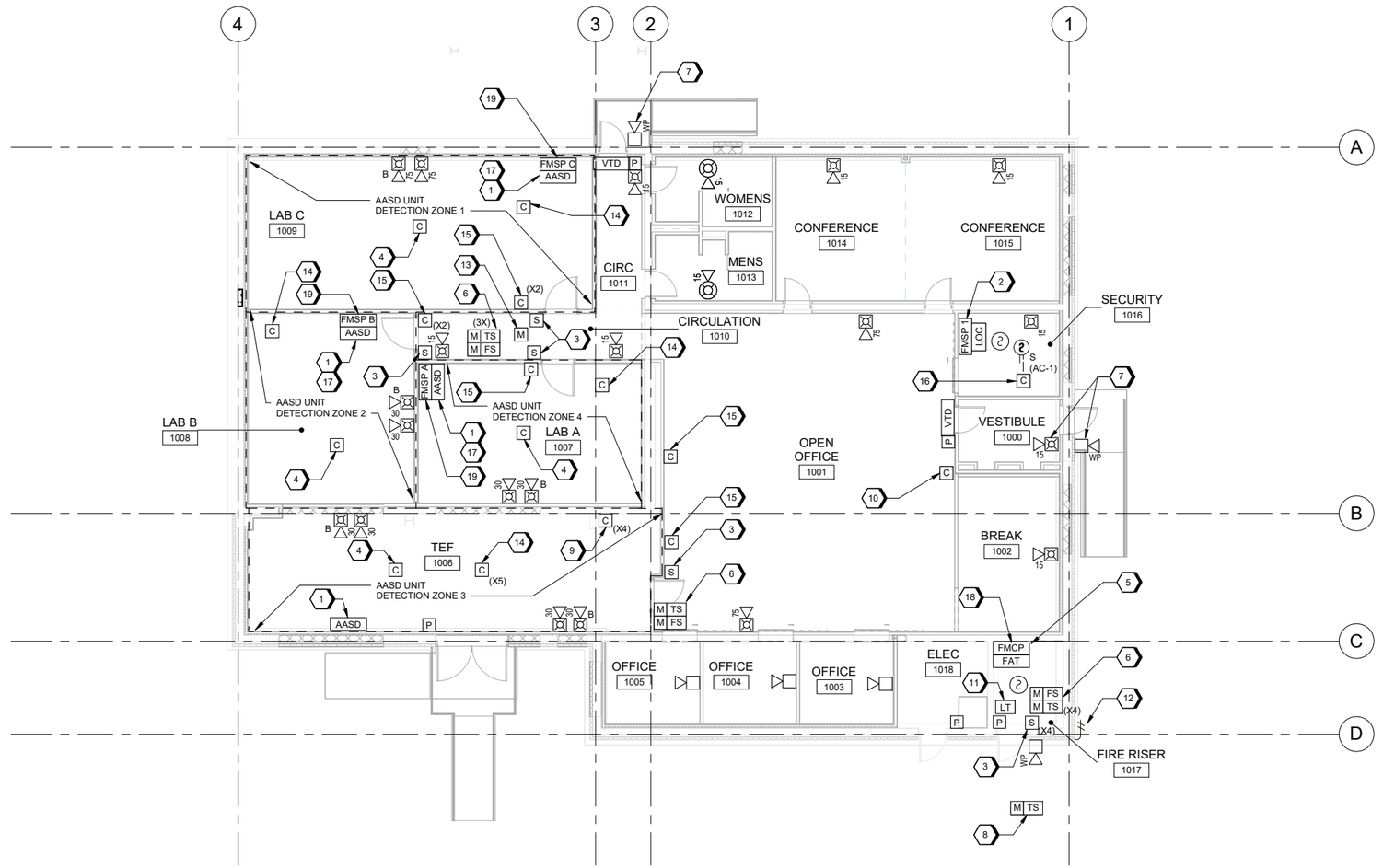

A1 FIRE ALARM GROUND FLOOR PLAN
SCALE 1/8" = 1'-0"

GENERAL SHEET NOTES

A. REFER TO FA001 FOR GENERAL NOTES, SYMBOLS, AND ABBREVIATIONS.

#SHEET KEYNOTES

1. AIR SAMPLING SMOKE DETECTOR LOCATION. PROVIDE COMPLETE AIR SAMPLING SMOKE DETECTION FOR LABS AND TEF ROOM. LAYOUT MUST BE IN ACCORDANCE WITH NFPA 72, TSFPEWG G 3-600-01.01-18 AND MANUFACTURER'S RECOMMENDATIONS. PROVIDE SAMPLING PORTS AROUND CRAC UNITS AND AIR RETURNS AS RECOMMENDED BY MANUFACTURER. BELOW FLOOR DETECTION NOT REQUIRED PER TSFPEWG G 3-600-01.01 -18 SECTION 3-3.2.2 BECAUSE THERE ARE NO COMBUSTIBLE CABLES AND SUB FLOOR SPACE IS NOT USED FOR AIR VENTILATION.
2. SECURE-SIDE REMOTE FIRE ALARM/MASS NOTIFICATION PANEL. PROVIDE FIBER OPTIC CONNECTION BETWEEN THE MAIN FMCP AND THE SUBPANELS (FMSP) LOCATED WITHIN THE SECURE BOUNDARY. FIRE DEPARTMENT HAS CONFIRMED CONTROL PANEL IN SECURITY OFFICE IS ACCEPTABLE INSTEAD OF AN ANNUNCIATOR IN ENTRANCE VESTIBULE.
3. PROVIDE A CLEARLY LABELED MANUAL SMOKE EVACUATION CONTROL STATION THAT IS DISTINCTLY DIFFERENT FROM THE FIRE ALARM PULL STATIONS. THE MANUAL EXHAUST PULL STATION MUST NOT BE LABELED WITH THE WORD "FIRE".
4. PROVIDE CONTROL MODULE FOR ACTIVATION OF SMOKE EXHAUST SYSTEM. COORDINATE WITH MECHANICAL CONTRACTOR FOR EXACT LOCATION.
5. PROVIDE A KEY OPERATED SWITCH FOR DEACTIVATION OF THE SMOKE EXHAUST SYSTEM NEXT TO FMCP.
6. MONITOR ALL SPRINKLER SYSTEM TAMPER AND WATER FLOW SWITCHES.
7. ROUTE CONDUIT TO NON-SECURE DEVICES FROM NON-SECURE FMCP. CONDUIT MUST BE ROUTED ON EXTERIOR OF BUILDING OR ABOVE SECURE BOUNDARY TO AVOID PASSING THROUGH SECURE AREA. PROVIDE SURGE SUPPRESSOR FOR DEVICES ROUTED EXTERIOR TO BUILDING.
8. PROVIDE MONITOR MODULE AND TAMPER SWITCH FOR EXISTING PIV. REFER TO CIVIL DRAWINGS FOR EXACT LOCATION.
9. PROVIDE CONTROL MODULE TO SHUT DOWN POWER TO ELECTRIC EQUIPMENT UPON SPRINKLER WATER FLOW ALARM OR AASD ALARM IN ELECTRONIC EQUIPMENT ROOMS. COORDINATE WITH ELECTRICAL DRAWINGS FOR EXACT LOCATION OF CONTROL MODULE.
10. PROVIDE CONTROL MODULES AS NEEDED TO OVERRIDE OCCUPANCY SENSORS UPON FIRE ALARM CONDITION. COORDINATE EXACT LOCATION WITH ELECTRICAL DRAWINGS.
11. PROVIDE LOW TEMPERATURE SENSOR SET TO 40 DEGREES TO MONITOR FOR FREEZING PIPE CONDITIONS.
12. RADIO TRANSCEIVER ANTENNA. FIELD VERIFY EXACT LOCATION.
13. MONITOR LEAK DETECTION PANEL. COORDINATE WITH MECHANICAL CONTRACTOR FOR EXACT LOCATION.
14. PROVIDE CONTROL MODULE TO SHUT DOWN CRAC UNIT UPON AASD ALARM CONDITION IN ASSOCIATED ROOM. COORDINATE WITH MECHANICAL CONTRACTOR FOR EXACT LOCATION OF INTERFACE.
15. PROVIDE CONTROL MODULE TO SHUT SMOKE DAMPERS TO ASSOCIATE ROOM UPON AASD ALARM CONDITION IN ASSOCIATED ROOM.
16. PROVIDE CONTRL MODULE TO SHUTDOWN AHU UPON DUCT SMOKE DETECTION.
17. PROVIDE KEY OPERATED OVERRIDE SWITCH TO DISABLE AASD DETECTION IN ASSOCIATED LAB.
18. PROVIDE FIRE ALARM/MASS NOTIFICATION CONTROL PANEL WITH MONACO TRANSCEIVER FOR REPORTING TO EXISTING MONACO D-21 REPORTING STATION.
19. PROVIDE FIRE ALARM/MASS NOTIFICATION CONTROL PANEL TO SERVE ALL SPEAKERS IN LAB. PROVIDE A FIBER CONNECTION TO FMSP IN SECURITY OFFICE.

GRAPHIC SCALE(S)

8 6 4 2 0 8 16
SCALE: 1/8"=1'-0"

PLAN NORTH

STATE OF OHIO
EDWARD PITTS
E-92970
05-08-26
REGISTERED PROFESSIONAL ENGINEER

MARK	DESCRIPTION	DATE

DESIGNED BY: E. PITTS
DRAWN BY: B. MITCHELL
CHECKED BY: B. BUSS
SUBMITTED BY: D. PEARSON
SIZE: ANSI D
ISSUE DATE: MAY 2026
ANG PROJECT NO.: PBXP222050
CONTRACT NO.: FA8903-21-D-0008
TASK ORDER NO.: W56SBR23F0009

OHIO AIR NATIONAL GUARD
MANSFIELD LAHM AIR NATIONAL GUARD BASE, OH

JACOBS GOVERNMENT SERVICES
2600 MICHELSON SR. STE 500
IRVINE, CA 92612

MANSFIELD LAHM AIR NATIONAL GUARD BASE, OH
REPAIR B403 FOR CYBER
FA877006
FIRE ALARM OVERALL FLOOR PLAN

SHEET ID
FA101

TYPE B-3 FINAL

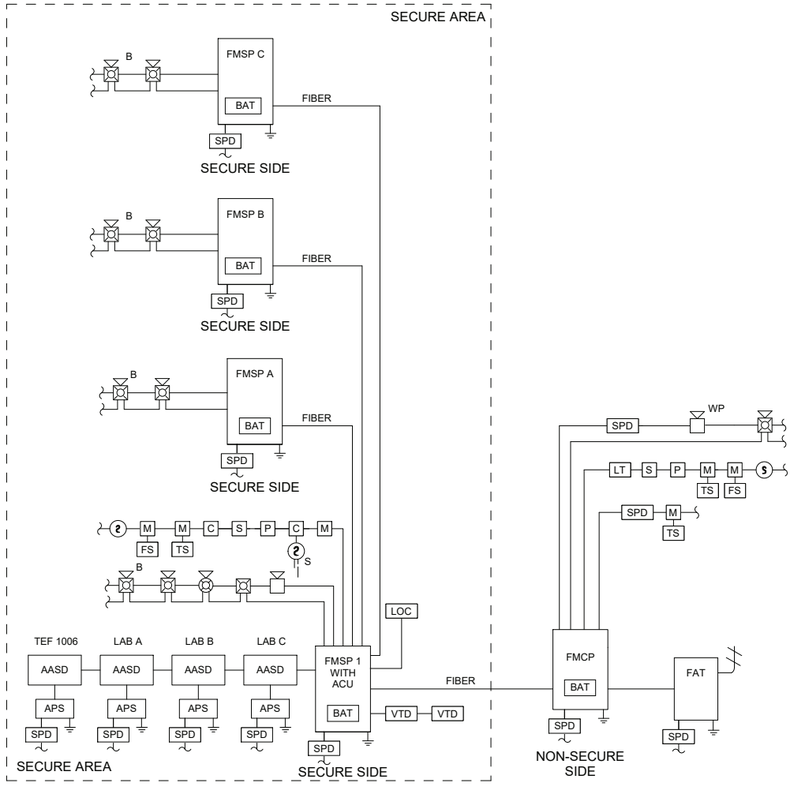

D1 FIRE ALARM RISER DIAGRAM

SCALE NTS

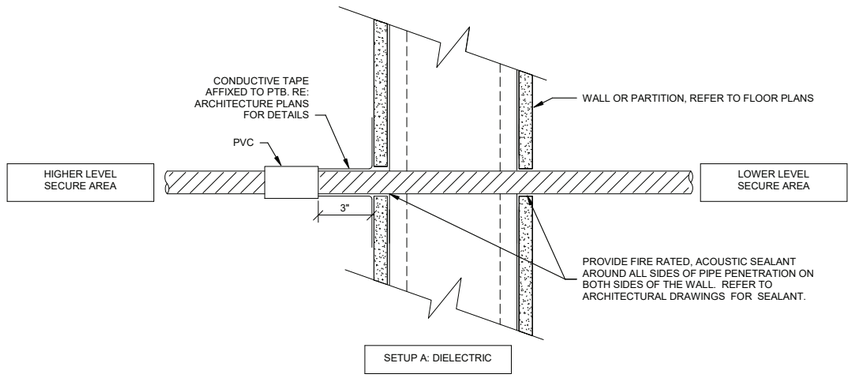

A1 CONDUIT PENETRATION - SECURE TO UNSECURE BOUNDARY

SCALE NTS

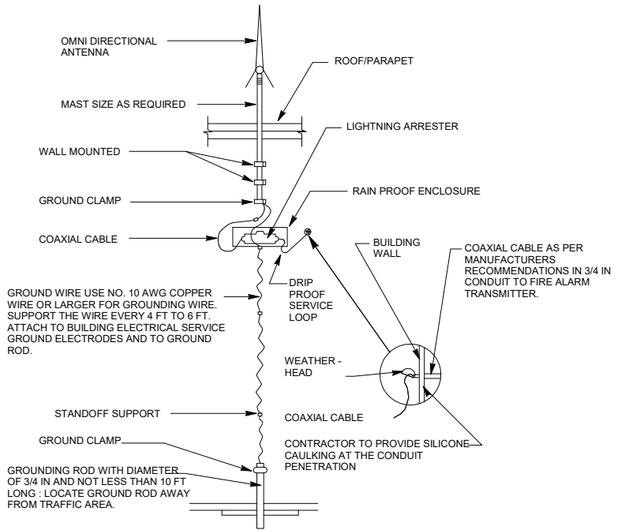

A6 FIRE ALARM/MASS NOTIFICATION ANTENNA

SCALE NTS

STATE OF OHIO
EDWARD PITTS
E-92970
05-08-26
REGISTERED
PROFESSIONAL ENGINEER

MARK	DESCRIPTION	DATE

DESIGNED BY: E. PITTS
DRAWN BY: B. MITCHELL
CHECKED BY: B. BUSS
SUBMITTED BY: J. PEARSON
SIZE: ANSI D
ISSUE DATE: MAY 2026
ANG PROJECT NO.: PBXP222050
CONTRACT NO.: FA8803-21-D-0008
TASK ORDER NO.: W50S8R23F0009

OHIO AIR NATIONAL GUARD
MANSFIELD LAHM AIR NATIONAL GUARD BASE, OH

JACOBS GOVERNMENT SERVICES
2600 MICHELSON SR, STE 500
IRVINE, CA 92812

MANSFIELD LAHM AIR NATIONAL GUARD BASE, OH
REPAIR B403 FOR CYBER
FA877006
FIRE ALARM DETAILS

SHEET ID
FA501

SYSTEM INPUT		A	B	C	D	E	F	G	
ALARM CONDITIONS									
1	ALARM SIGNAL FROM FMSP 1	●				●	●		1
TROUBLE FUNCTIONS									
2	FMSP COMMON TROUBLE		●		●				2
3	FIRE ALARM AC POWER FAILURE		●		●				3
4	FIRE ALARM SYSTEM LOW BATTERY		●		●				4
5	BREAK OR OPEN CIRCUIT		●		●				5
6	GROUND FAULT		●		●				6
7	NOTIFICATION APPLIANCE CIRCUIT SHORT		●		●				7
8	REMOVAL OF ALARM OR SUPERVISORY PANEL MODULES		●		●				8
SUPERVISORY DEVICES									
9	AASD ALERT SIGNAL FROM FMSP 1			●				●	9
		A	B	C	D	E	F	G	

SYSTEM OUTPUTS

- AUDIO-VISUAL ALARM INDICATION
- AUDIO-VISUAL TROUBLE INDICATION
- AUDIO-VISUAL SUPERVISORY INDICATION
- COMMON FIRE ALARM TROUBLE SIGNAL TO FMSP 1
- INITIATE FIRE ALARM VISUAL NOTIFICATION
- INITIATE ASSOCIATED MASS NOTIFICATION MESSAGE
- ACTIVATE BLUE STROBE AND DISTINCT CHIME IN ASSOCIATED ROOM

NOTE: THIS MATRIX APPLIES TO EACH FMSP IN LAB A, B, AND C.

D1 FMSP A, B, AND C SEQUENCE OF OPERATIONS

SCALE N.T.S

SYSTEM INPUT		A	B	C	D	E	F	G	H	I	J	K	L	M	N	O	P	
ALARM CONDITIONS																		
A	RISER SPRINKLER WATER FLOW	●			●			●			●	●	●					A
B	MANUAL PULL STATION	●			●			●			●	●	●					B
C	SMOKE DETECTOR (OVER FMCP)	●			●			●			●	●	●					C
D	ALARM SIGNAL FROM FMSP 1	●			●						●	●	●					D
TROUBLE FUNCTIONS																		
E	FMCP COMMON TROUBLE		●			●			●									E
F	FIRE ALARM AC POWER FAILURE		●			●			●									F
G	FIRE ALARM SYSTEM LOW BATTERY		●			●			●									G
H	BREAK OR OPEN CIRCUIT		●			●			●									H
I	GROUND FAULT		●			●			●									I
J	NOTIFICATION APPLIANCE CIRCUIT SHORT		●			●			●									J
K	REMOVAL OF ALARM OR SUPERVISORY PANEL MODULES		●			●			●									K
L	TROUBLE SIGNAL FROM FMSP 1		●			●												L
	SUPERVISORY DEVICES																	
M	TAMPER SWITCH			●			●			●								M
N	MANUAL SMOKE EVACUATION CONTROL STATION			●			●			●				●				N
O	RISER ROOM LOW TEMPERATURE SWITCH			●			●			●								O
P	SMOKE EXHAUST SYSTEM DEACTIVATION SWITCH			●			●			●					●			P
Q	SUPERVISORY SIGNAL FROM FMSP 1			●			●											Q
R	LOCAL OPERATING CONSOLE USED FOR LIVE/PRE-RECORDED MNS MESSAGE			●			●			●		●				●		R
S	SIGNAL FROM BASE MASS NOTIFICATION SYSTEM			●			●			●		●				●		S
	PANEL FUNCTIONS																	
T	SYSTEM SILENCE															●		T
U	SYSTEM RESET																●	U
		A	B	C	D	E	F	G	H	I	J	K	L	M	N	O	P	

SYSTEM OUTPUTS

- PANEL ANNUNCIATION: DISPLAY ALARM INDICATION AND ALARM DEVICE AT FMCP
- NOTIFICATION: ACTUATE COMMON TROUBLE SIGNAL INDICATOR AND AUDIBLE
- NOTIFICATION: ACTUATE COMMON SUPERVISORY SIGNAL INDICATOR AND AUDIBLE
- NOTIFICATION: TRANSMIT ALARM SIGNAL TO MONACO TRANSCEIVER AND BASE REPORTING SYSTEM
- NOTIFICATION: TRANSMIT TROUBLE SIGNAL TO MONACO TRANSCEIVER AND BASE REPORTING SYSTEM
- NOTIFICATION: TRANSMIT SUPERVISORY SIGNAL TO MONACO TRANSCEIVER AND BASE REPORTING SYSTEM
- NOTIFICATION: TRANSMIT ALARM SIGNAL TO FMSP 1
- NOTIFICATION: TRANSMIT TROUBLE SIGNAL TO FMSP 1
- NOTIFICATION: TRANSMIT SUPERVISORY SIGNAL TO FMSP 1
- NOTIFICATION: INITIATE FIRE ALARM VISUAL NOTIFICATION
- NOTIFICATION: INITIATE ASSOCIATED MASS NOTIFICATION MESSAGE
- AUXILIARY FUNCTIONS: OVERRIDE OCCUPANCY SENSORS AND ACTIVATE LIGHTING WITHIN THE MEANS OF EGRESS
- AUXILIARY FUNCTIONS: SEND SMOKE EXHAUST MANUAL PULL STATION SIGNAL TO FMSP 1
- AUXILIARY FUNCTIONS: SEND SMOKE EXHAUST DEACTIVATION SIGNAL TO FMSP 1
- FMCP FUNC: SILENCE PANEL AND BUILDING FIRE ALARM AUDIBLE/VISUAL NOTIFICATION APPLIANCES STOP
- FMCP FUNC: CONTROL PANEL RETURNS TO NORMAL (AUDIBLES AND VISUALS STOP)

A2 FMCP SEQUENCE OF OPERATIONS

SCALE NTS

SYSTEM INPUT		A	B	C	D	E	F	G	H	I	J	K	L	M	N	O	P	Q	R	
ALARM CONDITIONS																				
A	AASD SMOKE DETECTION ALARM LEVEL	●			●			●	●	●		●	●	●	●					A
B	MANUAL PULL STATION	●			●			●	●	●			●		●					B
C	SMOKE DETECTOR (OVER FMSP 1)	●			●			●	●	●			●							C
D	LAB OR TEF SPRINKLER WATER FLOW	●			●			●	●	●		●	●	●						D
E	FIRE ALARM SIGNAL FROM FMCP	●			●			●	●	●			●							E
TROUBLE FUNCTIONS																				
F	FMSP COMMON TROUBLE		●			●														F
G	FIRE ALARM AC POWER FAILURE		●			●														G
H	FIRE ALARM SYSTEM LOW BATTERY		●			●														H
I	BREAK OR OPEN CIRCUIT		●			●														I
J	GROUND FAULT		●			●														J
K	NOTIFICATION APPLIANCE CIRCUIT SHORT		●			●														K
L	REMOVAL OF ALARM OR SUPERVISORY PANEL MODULES		●			●														L
M	TROUBLE SIGNAL FROM FMCP OR FMSP A, B, AND C		●			●														M
	SUPERVISORY DEVICES																			
N	MANUAL SMOKE EVACUATION CONTROL STATION/MANUAL SMOKE STATION SIGNAL FROM FMCP			●		●										●				N
O	TAMPER SWITCH			●		●														O
P	DUCT SMOKE DETECTOR			●		●							●							P
Q	LOCAL MICROPHONE USED FOR LIVE MESSAGE			●		●			●	●								●		Q
R	SUPERVISORY SIGNAL FROM FMCP			●																R
S	AASD SMOKE DETECTION ALERT LEVEL			●		●	●					●								S
T	AASD SMOKE DETECTION INHIBIT SWITCH			●		●														T
U	LEAK DETECTION PANEL ALARM			●		●														U
V	SMOKE EXHAUST DEACTIVATION SWITCH SIGNAL FROM FMCP			●		●											●			V
	PANEL FUNCTIONS																			
W	SYSTEM SILENCE																	●		W
X	SYSTEM RESET																		●	X
		A	B	C	D	E	F	G	H	I	J	K	L	M	N	O	P	Q	R	

SYSTEM OUTPUTS

- PANEL ANNUNCIATION: DISPLAY ALARM INDICATION AND ALARM DEVICE AT FMCP
- NOTIFICATION: ACTUATE COMMON TROUBLE SIGNAL INDICATOR AND AUDIBLE
- NOTIFICATION: ACTUATE COMMON SUPERVISORY SIGNAL INDICATOR AND AUDIBLE
- NOTIFICATION: TRANSMIT ALARM SIGNAL TO FMCP AND FSMP A, B, AND C
- NOTIFICATION: TRANSMIT TROUBLE SIGNAL TO FMCP
- NOTIFICATION: TRANSMIT SUPERVISORY SIGNAL TO FMCP
- NOTIFICATION: TRANSMIT AASD ALERT SIGNAL TO FMSP IN ASSOCIATED LAB
- NOTIFICATION: INITIATE FIRE ALARM VISUAL NOTIFICATION
- NOTIFICATION: INITIATE ASSOCIATED MASS NOTIFICATION MESSAGE
- NOTIFICATION: DISPLAY ASSOCIATED MESSAGE ON LED TEXT SIGNS
- AUXILIARY FUNCTIONS: ACTIVATE BLUE STROBE AND DISTINCT CHIME IN ASSOCIATED ROOM
- AUXILIARY FUNCTIONS: SHUTDOWN ASSOCIATED HVAC UNIT
- AUXILIARY FUNCTIONS: SHUT DOWN POWER TO ELECTRONIC EQUIPMENT IN TEF AND LABS
- AUXILIARY FUNCTIONS: OVERRIDE OCCUPANCY SENSORS AND ACTIVATE LIGHTING WITHIN THE MEANS OF EGRESS
- AUXILIARY FUNCTIONS: ACTIVATE SMOKE EXHAUST SYSTEM IN ASSOCIATED LAB OR TEF ROOM AND SHUT DAMPERS INTO AND OUT OF ROOM
- AUXILIARY FUNCTIONS: DEACTIVATE SMOKE EXHAUST SYSTEM IN ASSOCIATED LAB OR TEF ROOM AND OPEN ASSOCIATED DAMPERS
- FMCP FUNC: SILENCE PANEL AND BUILDING FIRE ALARM AUDIBLE/VISUAL NOTIFICATION APPLIANCES STOP
- FMCP FUNC: CONTROL PANEL RETURNS TO NORMAL (AUDIBLES AND VISUALS STOP)

A6 FMSP 1 SEQUENCE OF OPERATIONS

SCALE NTS

STATE OF OHIO
EDWARD PITTS
E-92970
05-08-26
REGISTERED PROFESSIONAL ENGINEER

MARK	DESCRIPTION	DATE

DESIGNED BY: E. PITTS
DRAWN BY: B. MITCHELL
CHECKED BY: B. BUSS
SUBMITTED BY: D. PEARSON
SIZE: ANSI D
ISSUE DATE: MAY 2026
ANG PROJECT NO.: PBXP222050
CONTRACT NO.: FA8803-21-D-0008
TASK ORDER NO.: W56SBR23F0009

OHIO AIR NATIONAL GUARD
MANSFIELD LAHM AIR NATIONAL GUARD BASE, OH

JACOBS GOVERNMENT SERVICES
2600 MICHELSON SR. STE 500
IRVINE, CA 92812

MANSFIELD LAHM AIR NATIONAL GUARD BASE, OH
REPAIR B403 FOR CYBER
FA877006
FIRE ALARM MATRIX

SHEET ID

FA502

TYPE B-3 FINAL

FIRE SPRINKLER SYSTEM NOTES

A. PROVIDE AUTOMATIC WET-PIPE SPRINKLER SYSTEM PROTECTION THROUGHOUT THE ENTIRE BUILDING. THE DESIGN AND INSTALLATION MUST BE IN ACCORDANCE WITH UFC 3-600-01, NFPA 13, SPECIFICATION 21 13 13, ANGETL 24-01-03 AND ALL APPLICABLE BUILDING AND FIRE CODES. PROVIDE ALL NECESSARY COMPONENTS AS REQUIRED FOR A FULLY FUNCTIONING WET-PIPE FIRE SPRINKLER SYSTEM.

B. COORDINATE THE LOCATION OF RISERS, DRAINS, TEST CONNECTIONS, AND OTHER SPRINKLER SYSTEM COMPONENTS WITH ARCHITECTURAL, STRUCTURAL, MECHANICAL AND ELECTRICAL PORTIONS OF THE BUILDING. ALL DRAINS MUST BE ROUTED TO THE EXTERIOR OF THE BUILDING AND TERMINATE NO MORE THAN 18 INCHES ABOVE GRADE. ARRANGE DRAIN SO THAT IT DISCHARGES DIRECTLY ONTO A SPLASHBLOCK OR CONCRETE SURFACE. DRAINAGE TO CONCRETE SURFACES MUST NOT DISCHARGE ADJACENT TO AN EXIT DOOR, NOR CROSS THE PATH OF EGRESS DISCHARGE.

C. PROVIDE PIPE HANGERS ON ALL FIRE SPRINKLER SYSTEM PIPING AND EQUIPMENT PER NFPA 13 AS REQUIRED BY UFC 3-600-01.

D. IN ALL SMOOTH CEILING AREAS, INSTALL FULLY CONCEALED SPRINKLERS. IN AREAS WITH OPEN CEILINGS OR WHERE SPRINKLERS AND PIPING ARE EXPOSED, INSTALL PROTECTED SPRINKLERS WITH HEAD GUARDS/CAGES.

E. REFER TO THE ARCHITECTURAL DRAWINGS FOR ROOM FINISH SCHEDULE AND ROOM USE. REFER TO THE ARCHITECTURAL REFLECTED CEILING PLANS FOR THE LOCATION OF CEILING-MOUNTED DEVICES.

F. PROVIDE SLEEVES AND WALL PLATES FOR ALL PENETRATIONS THROUGH WALLS OR FLOORS THAT MIGHT INCLUDE DRILLING THROUGH CONCRETE, METAL, SHEETROCK, OR OTHER SIMILAR MATERIALS. FIELD VERIFY APPROXIMATE WALL AND FLOOR PENETRATIONS SHOWN ON THE PLANS. SEAL ALL PENETRATIONS IN RATED SEPARATIONS TO MEET THE MINIMUM FIRE RATING OF THE WALL OR FLOOR.

G. FOR ALL FIRE SPRINKLER SYSTEM PIPING PROVIDE SCHEDULE 40 BLACK STEEL. THE CONTRACTOR MAY UTILIZE THREADED OR ROLL GROOVED FITTINGS. PLAIN END FITTINGS WITH MECHANICAL COUPLINGS AND FITTINGS THAT USE STEEL GRIPPING DEVICES TO BITE INTO THE PIPE ARE PROHIBITED. SADDLE TEES USING RUBBER GASKET FITTINGS ARE PROHIBITED. GALVANIZED PIPE AND FITTINGS ARE PROHIBITED.

H. PROVIDE AUXILIARY DRAINAGE FOR ALL TRAPPED SECTIONS OF PIPE, SIZED AND CONFIGURED IN ACCORDANCE WITH THE REQUIREMENTS OF NFPA 13. PROVIDE AUTOMATIC AIR VENTS AT ALL HIGH POINTS IN EACH WET PIPE SPRINKLER SYSTEM IN ACCORDANCE WITH NFPA 13.

I. THE CONTRACTOR MUST VERIFY THE LOCATION OF ALL SPRINKLER SYSTEM COMPONENTS AND COORDINATE WITH ALL TRADES. FINAL COMPONENT QUANTITY, LOCATIONS AND SIZES ARE THE SOLE RESPONSIBILITY OF THE FIRE SUPPRESSION CONTRACTOR. FINAL INSTALLATION MUST BE TO THE SATISFACTION OF THE CONTRACTOR'S QUALIFIED FIRE PROTECTION ENGINEER AND AUTHORITY HAVING JURISDICTION. CORRECT DEFICIENCIES AT NO ADDITIONAL COST.

J. PROVIDE SIGNAGE ON ALL RISERS AND VALVES. FOR RISERS, INDICATE AREA SERVED AND DESIGN CRITERIA. FOR VALVES, INDICATE FUNCTION AND NORMAL OPERATING CONDITION.

K. THESE DOCUMENTS DEPICT PERFORMANCE LEVEL ENGINEERING DESIGN CRITERIA TO BE UTILIZED AS GUIDANCE FOR THE PLANNING OF THE FIRE SPRINKLER SYSTEM BY THE CONTRACTOR. PROVIDE COMPLETE DOCUMENTS FOR REVIEW AND APPROVAL FROM THE QFPE AND THE AUTHORITY HAVING JURISDICTION PRIOR TO INSTALLATION. THE FINAL DESIGN (QUANTITIES, SIZING, SPRINKLER HEAD LOCATIONS, ETC) IS THE SOLE RESPONSIBILITY OF THE FIRE SUPPRESSION CONTRACTOR. THE DRAWINGS INDICATE MINIMUM REQUIREMENTS.

L. PROVIDE GROUND ON SPRINKLER PIPING PENETRATING SECURE PERIMETER WALLS, ADJACENT TO PENETRATION AND INSIDE SECURE PERIMETER IN ACCORDANCE WITH UFC 4-010-05.

M. DO NO LOCATE SPRINKLER SYSTEM MAIN PIPING OVER OR WITHIN THREE LATERAL FEET OF ELECTRICAL PANELS, TRANSFORMERS, SERVER RACKS, AND OTHER ELECTRICAL EQUIPMENT. FOR ROOMS WITH COMMUNICATIONS EQUIPMENT - SPRINKLER PIPING MUST PENETRATE THE WALL ABOVE THE DOORWAY. SPRINKLER PIPING DIRECTLY ABOVE EQUIPMENT IS PROHIBITED.

N. DEMOLISH ALL OF EXISTING SPRINKLER SYSTEM EXCEPT FOR NEWLY INSTALLED FIRE WATER INCOMING LINE IN FIRE RISER ROOM.

PENETRATION OF SECURE BOUNDARY OR STC RATED PARTITIONS:

VARIOUS SECURITY ZONES ARE IDENTIFIED FOR USE THROUGHOUT THIS FACILITY ON ARCHITECTURE DRAWING. MINIMIZE SECURE BOUNDARY PENETRATIONS. ARCHITECTURAL DRAWINGS IDENTIFY THE STC RATINGS FOR ALL WALLS. PIPING IN SOUND RATED WALLS MUST BE MINIMIZED AND, WHERE REQUIRED, MUST BE TREATED TO MAINTAIN THE RATING OF THE ASSEMBLY. PROVIDE GROUNDING ON SPRINKLER PIPING PENETRATING SECURE PERIMETER WALLS ON THE SECURE SIDE OF THE PERIMETER PENETRATION. GROUND WITHIN 6 INCHES OF THE PENETRATION USING A NO. 4 WIRE TO THE BUILDING GROUNDING SYSTEM. BOTH SIDES OF THE PENETRATION MUST BE SEALED WITH AN ACOUSTICAL FOAM OR SEALANT FINISHED TO MATCH THE WALL THAT IS BEING PENETRATED. WHERE MULTIPLE PENETRATIONS ARE REQUIRED, THEY MUST BE GROUPED TOGETHER.

FIRE SPRINKLER SYMBOLS

- ELBOW UP
- ELBOW DOWN
- TEE UP
- TEE DOWN
- LATERAL UP
- LATERAL DOWN
- CONCENTRIC REDUCER
- ECCENTRIC REDUCER
- UNION
- 90° ELBOW
- TEE
- 45° ELBOW
- WET-PIPE FIRE SPRINKLER RISER
- INSPECTOR'S TEST CONNECTION/AUXILIARY DRAIN
- HOSE VALVE CONNECTION
- GATE VALVE
- CHECK VALVE
- BUTTERFLY VALVE
- SECURE BOUNDARY LOCATION

MISCELLANEOUS

- (1) NOTE BY SYMBOL REFERENCE
- [1] CALCULATION NODE POINT

DRAWING REFERENCE

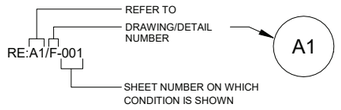

FLOW TEST DATA

NOTE: FOR INFORMATION ONLY

LOCATION:	MANSFIELD AIR NATIONAL GUARD BASE
DATE:	MARCH 18, 2025
TIME:	2:00 PM
STATIC PRESSURE:	70 PSI
RESIDUAL PRESSURE:	44 PSI
CALCULATED FLOW:	919 GPM
FLOW AVAILABLE AT 20 PSI:	1,308 GPM

APPLICABLE CODES AND STANDARDS

APPLICABLE CODES AND STANDARDS	EDITION
UFC 1-200-01 - DoD BUILDING CODE	CHANGE 4, 17 DECEMBER 2024
UFC 3-600-01 - FIRE PROTECTION ENGINEERING FOR FACILITIES	CHANGE 6, 06 MAY 2021
UFC 4-010-05 - SECURE AREA PLANNING, DESIGN, AND CONSTRUCTION	26 MAY 2023
NFPA 1 - FIRE CODE	2024
NFPA 13 - STANDARD FOR THE INSTALLATION OF SPRINKLER SYSTEMS	2025
NFPA 101 - LIFE SAFETY CODE (LSC)	2024
NFPA 170 - STANDARD FOR FIRE SAFETY AND EMERGENCY SYMBOLS	2024
NFPA 220 - STANDARD ON TYPES OF BUILDING CONSTRUCTION	2024
INTERNATIONAL BUILDING CODE (IBC)	2024
TSFPEWG G 3-600-01.01-18	CHANGE 1, 21 APRIL 2021
ANG ETL 24-01-03 FIRE PROTECTION DESIGN GUIDANCE	31 MARCH 2024

STATE OF OHIO
EDWARD PITTS
E-92970
05-08-26
REGISTERED
PROFESSIONAL ENGINEER

MARK	DESCRIPTION	DATE

DESIGNED BY: E. PITTS
DRAWN BY: B. MITCHELL
CHECKED BY: B. BUSS
SUBMITTED BY: D. PEARSON
SIZE: ANSI D
ISSUE DATE: MAY 2026
ANG PROJECT NO.: PBXP222050
CONTRACT NO.: FA8903-21-D-0008
TASK ORDER NO.: W50S8R23F0009

OHIO AIR NATIONAL GUARD
MANSFIELD LAHM AIR NATIONAL GUARD BASE, OH

JACOBS GOVERNMENT SERVICES
2600 MICHELSON SR, STE 500
IRVINE, CA 92612

MANSFIELD LAHM AIR NATIONAL GUARD BASE, OH
REPAIR B403 FOR CYBER
FA877006
FIRE SPRINKLER GENERAL NOTES

SHEET ID
FX001

TYPE B-3 FINAL

FIRE SPRINKLER DESIGN CRITERIA

HATCH	HAZARD CLASSIFICATION	DENSITY/AREA	HOSE ALLOWANCE & DURATION	AREA OF COVERAGE PER SPRINKLER	MINIMUM K-FACTOR	RESPONSE TYPE / TEMP. RATING
(NONE)	LIGHT	0.1 GPM/SF OVER MOST REMOTE 1500 SF	250 GPM	225 SF	5.6	QR / ORDINARY
	ORDINARY	0.2 GPM/SF OVER MOST REMOTE 2500 SF	250 GPM	130 SF	8.0	QR / ORDINARY

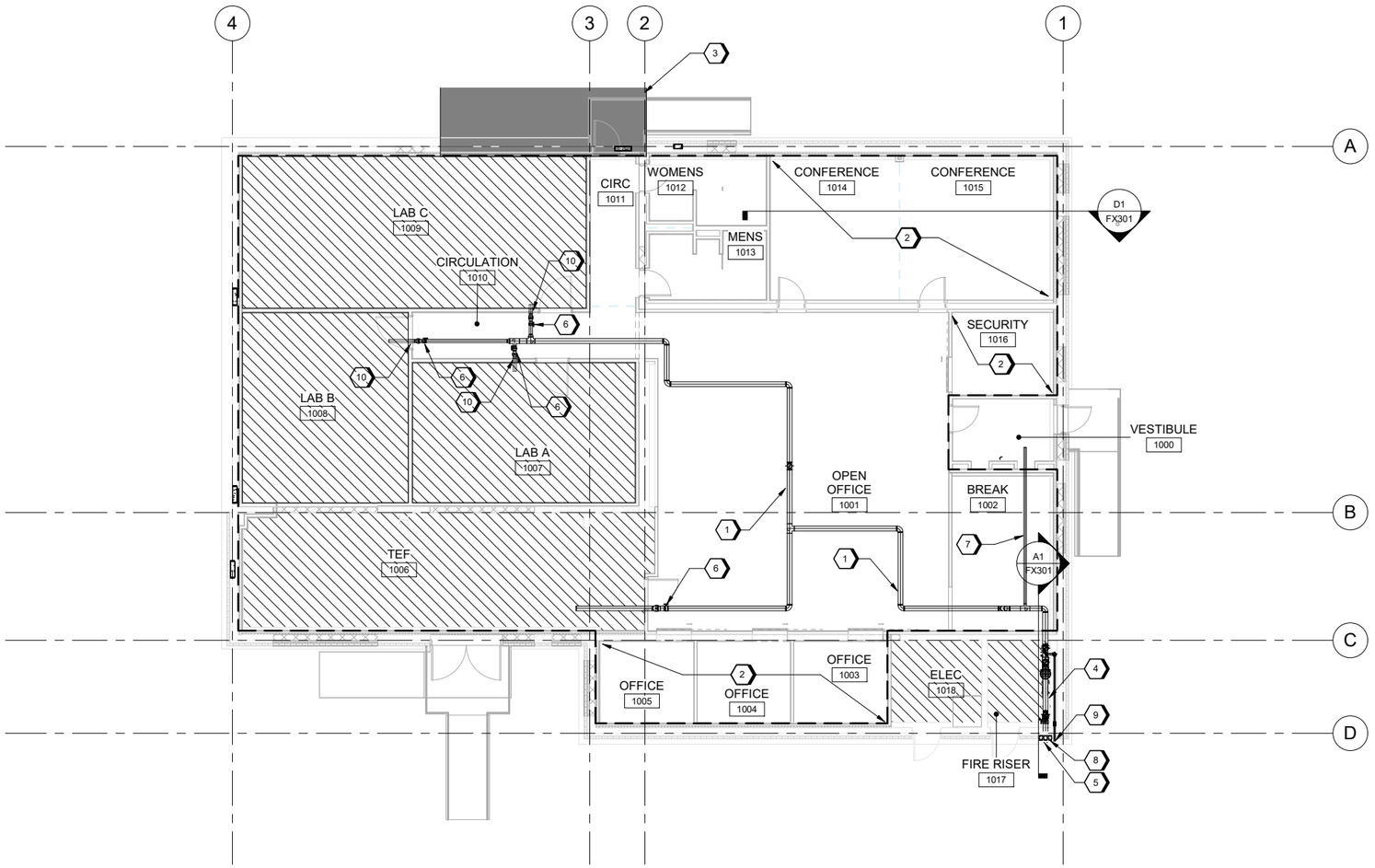

A1 FIRE SPRINKLER GROUND FLOOR PLAN
SCALE 1/8" = 1'-0"

GENERAL SHEET NOTES

A. REFER TO FX001 FOR GENERAL NOTES, SYMBOLS, AND ABBREVIATIONS.

#SHEET KEYNOTES

1. SPRINKLER MAIN.
2. BAFFLE CEILINGS ARE AT LEAST 70% OPEN AND, THEREFORE, SPRINKLERS ARE NOT REQUIRED BELOW BAFFLE CEILINGS BUT MUST BE INSTALLED ABOVE BAFFLE CEILINGS IN ACCORDANCE WITH NFPA 13 9.3.10(1).
3. CANOPY IS CONSTRUCTED OF NON-COMBUSTIBLE MATERIAL, AND STORAGE WILL NOT BE PERMITTED BELOW CANOPY. THEREFORE, SPRINKLER PROTECTION IS NOT REQUIRED UNDER CANOPY PER NFPA 13 SECTION 9.2.3.
4. 8" BACKFLOW PREVENTER.
5. 2 X 2-1/2" X 6" FIRE DEPARTMENT CONNECTION.
6. PROVIDE CONTROL VALVE ASSEMBLY FOR EACH ELECTRONIC EQUIPMENT AREA. REFER TO FX501 FOR DETAIL.
7. ROUTE SUPPLY FOR SPRINKLER SYSTEM IN VESTIBULE 1000 ABOVE SECURE BOUNDARY.
8. BACKFLOW PREVENTER WITH ONE 2-1/2" TEST CONNECTION PER 250 GPM OF CALCULATED SYSTEM DEMAND.
9. 2" SPRINKLER DRAIN TO EXTERIOR.
10. SECURE AREA PENETRATION. REFER TO FX501 FOR DETAIL.

GRAPHIC SCALE(S)

8 6 4 2 0 8 16
SCALE: 1/8"=1'-0"

PLAN NORTH

STATE OF OHIO
EDWARD PITTS
E-92970
05-08-26
REGISTERED
PROFESSIONAL ENGINEER

MARK	DESCRIPTION	DATE

ISSUE DATE: MAY 2026
ANG PROJECT NO.: PBXP222050
CONTRACT NO.: FA8803-21-D-0008
TASK ORDER NO.: W50S8R23F0009

DESIGNED BY: E. PITTS
DRAWN BY: B. MITCHELL
CHECKED BY: B. BUSS
SUBMITTED BY: D. PEARSON
SIZE: ANSI D

OHIO AIR NATIONAL GUARD
MANSFIELD LAHM AIR NATIONAL GUARD BASE, OH

JACOBS GOVERNMENT SERVICES
2600 MICHELSON SR, STE 500
IRVINE, CA 92612

MANSFIELD LAHM AIR NATIONAL GUARD BASE, OH
REPAIR B403 FOR CYBER
FA877006
FIRE SPRINKLER OVERALL FLOOR PLAN

SHEET ID
FX101

TYPE B-3 FINAL

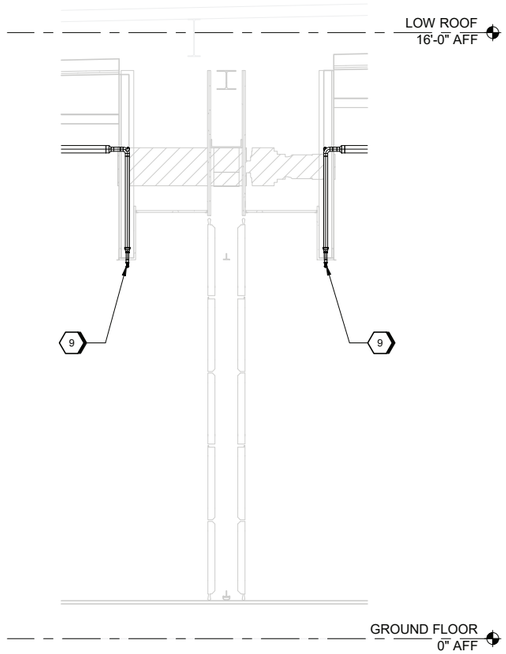

D1 CONFERENCE ROOM FOLDABLE PARTITION SECTION
SCALE 1/2" = 1'-0"

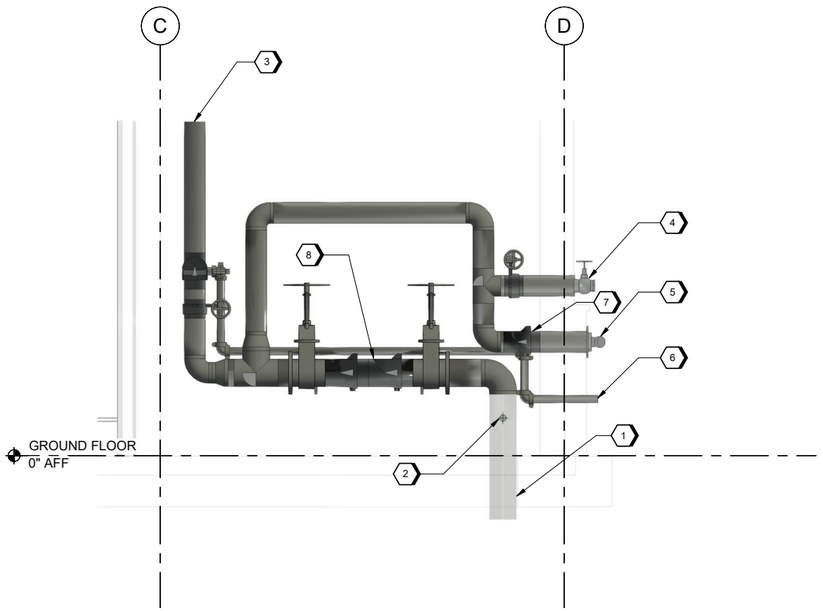

A1 EAST RISER SECTION VIEW
SCALE 1/2" = 1'-0"

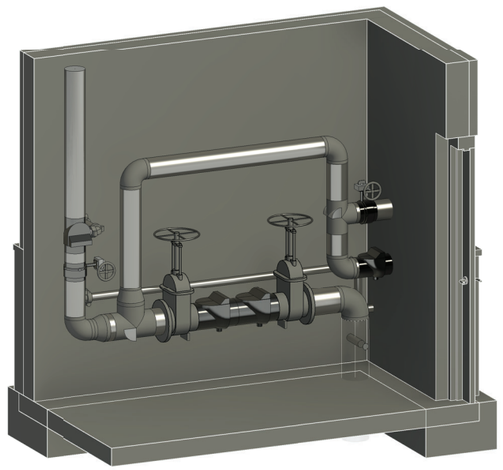

A5 3D RISER VIEW
SCALE

GENERAL SHEET NOTES

A. REFER TO FX001 FOR GENERAL NOTES, SYMBOLS, AND ABBREVIATIONS.

#SHEET KEYNOTES

1. EXISTING 8" UNDERGROUND FIRE WATER SUPPLY.
2. PLUMBING CONNECTION. REFER TO PLUMBING DRAWINGS FOR CONTINUATION.
3. 6" WET SPRINKLER RISER WITH BUTTERFLY VALVE, CHECK VALVE, FLOW SWITCH, PRESSURE GAUGES, AND TEST/DRAIN.
4. BACKFLOW PREVENTER WITH ONE 2-1/2" TEST CONNECTION PER 250 GPM OF CALCULATED SYSTEM DEMAND.
5. 2 X 2-1/2" X 6" FIRE DEPARTMENT CONNECTION.
6. 2" SPRINKLER DRAIN TO EXTERIOR.
7. 6" FDC CHECK VALVE WITH BALL DRIP.
8. 8" BACKFLOW PREVENTER.
9. PROVIDE PENDENT SPRINKLER TO PROTECT AREA UNDER FOLDABLE PARTITION.

GRAPHIC SCALE(S)

2 1 0 2 4
SCALE: 1/2"=1'-0"

STATE OF OHIO
EDWARD PITTS
E-92970
05-08-26
REGISTERED
PROFESSIONAL ENGINEER

MARK	DESCRIPTION	DATE

ISSUE DATE: MAY 2026
ANG PROJECT NO.: PBXP222050
CONTRACT NO.: FA8803-21-D-0008
TASK ORDER NO.: W50S8R23F0009

DESIGNED BY: E. PITTS
DRAWN BY: B. MITCHELL
CHECKED BY: B. BUSS
SUBMITTED BY: D. PEARSON
SIZE: ANSI D

OHIO AIR NATIONAL GUARD
MANSFIELD LAHM AIR NATIONAL GUARD BASE, OH

JACOBS GOVERNMENT SERVICES
2600 MICHELSON SR, STE 500
IRVINE, CA 92612

MANSFIELD LAHM AIR NATIONAL GUARD BASE, OH
REPAIR B403 FOR CYBER
FA877006
FIRE SPRINKLER SECTIONS

SHEET ID
FX301

TYPE B-3 FINAL

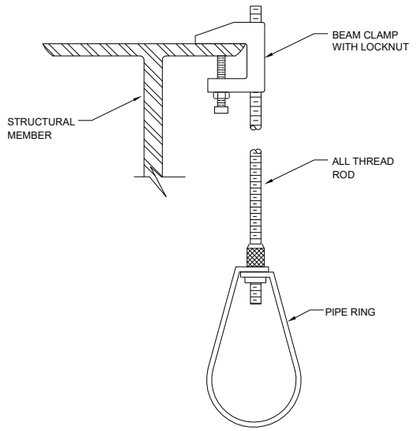

C1 BEAM CLAMP HANGER DETAIL

SCALE NTS

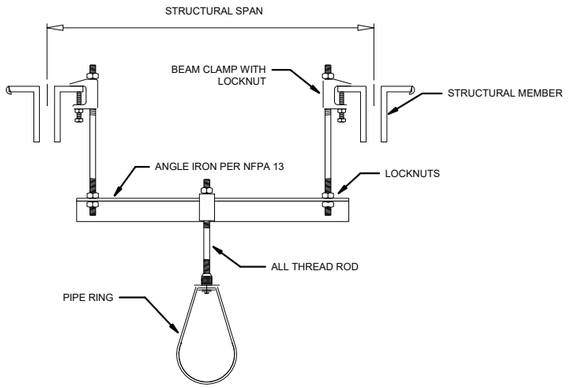

C3 BEAM/TRUSS TRAPEZE HANGER DETAIL

SCALE NTS

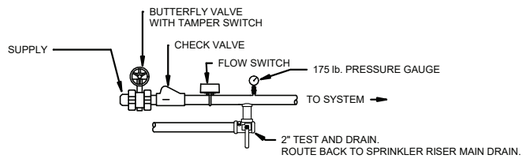

C6 CONTROL ASSEMBLY DETAIL

SCALE NTS

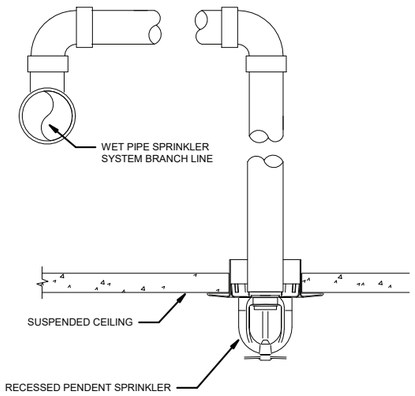

A1 RETURN BEND DETAIL

SCALE NTS

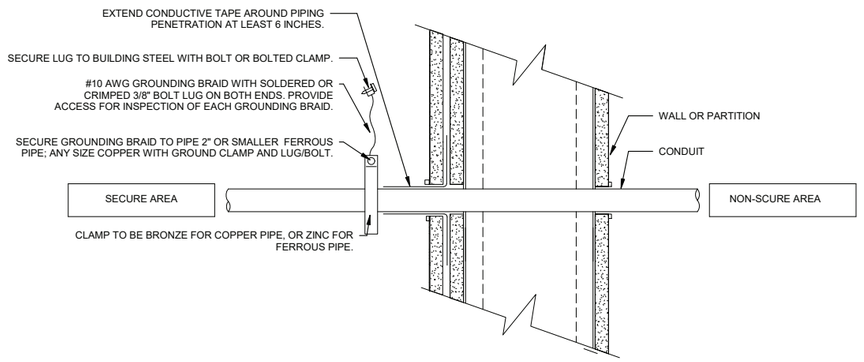

A3 SECURE AREA PENETRATION DETAIL

SCALE NTS

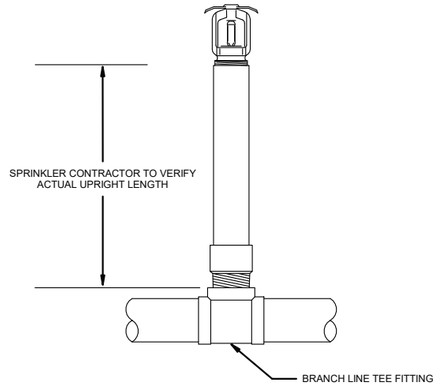

A8 UPRIGHT SPRINKLER DETAIL

SCALE NTS

STATE OF OHIO
EDWARD
PITTS
E-92970
05-08-26
REGISTERED
PROFESSIONAL ENGINEER

MARK	DESCRIPTION	DATE

DESIGNED BY: E. PITTS
DRAWN BY: B. MITCHELL
CHECKED BY: B. BUSS
SUBMITTED BY: D. PEARSON
SIZE: ANSI D

ISSUE DATE: MAY 2026
ANG PROJECT NO.: PBXP22050
CONTRACT NO.: FA8803-21-D-0008
TASK ORDER NO.: W50S8R23F0009

OHIO AIR NATIONAL GUARD
MANSFIELD LAHM AIR NATIONAL GUARD BASE, OH

JACOBS GOVERNMENT SERVICES
2600 MICHELSON SR. STE 500
IRVINE, CA 92612

MANSFIELD LAHM AIR NATIONAL GUARD BASE, OH
REPAIR B403 FOR CYBER
FA877006
FIRE SPRINKLER DETAILS

SHEET ID

FX501

TYPE B-3 FINAL

PIPING SYMBOLS

- VENT (V)
- CONDENSATE (CD)
- COLD WATER (CW)
- HOT WATER (HW)
- HOT WATER RETURN (HWR)
- SANITARY SEWER (SS)
- NATURAL GAS (NG)
- BALL VALVE
- HWR BALANCING SYSTEM
- BACKFLOW PREVENTER
- BALANCING VALVE
- BUTTERFLY VALVE
- CHECK VALVE
- CLEANOUT
- SHUT-OFF VALVE
- PRESSURE REGULATING VALVE
- PRESSURE GAUGE WITH SOV
- DIRECTION OF FLOW
- RISER DOWN
- RISER UP
- PIPE TEE
- STRAINER
- TEMPERATURE & PRESSURE RELIEF VALVE (T&P)
- POINT OF CONNECTION

ABBREVIATIONS

(NOTE: SOME OF THE PLUMBING ABBREVIATIONS MAY NOT APPLY TO THE PROJECT.)

A	
ABA	ARCHITECTURAL BARRIERS ACT
ABS	ACRYLONITRILE BUTADIENE STYRENE
ABV	ABOVE
AC	AIR COMPRESSOR
AD	ACCESS DOOR
ADA	AMERICANS WITH DISABILITIES ACT
ADJ	ADJUSTABLE
AF	AFTER FILTER
AFF	ABOVE FINISH FLOOR
AFG	ABOVE FINISH GRADE
AHJ	AUTHORITY HAVING JURISDICTION
AHR	AIR HOSE REEL
AMI	ADVANCED METERING INFRASTRUCTURE
AMP	AMPERE
AP	ACCESS PANEL
APPROX	APPROXIMATE
AR	AIR RECEIVER
ARCH	ARCHITECTURAL
ASME	AMERICAN SOCIETY OF MECHANICAL ENGINEERS
ASSE	AMERICAN SOCIETY OF SAFETY ENGINEERS
ASTM	AMERICAN SOCIETY FOR TESTING AND MATERIALS
B	
BACNET	BUILDING AUTOMATION AND CONTROL NETWORKS
BFP	BACKFLOW PREVENTER
BIM	BUILDING INFORMATION MODELING
BOP, B.O.P.	BOTTOM OF PIPE
BTU	BRITISH THERMAL UNIT
BTUH	BRITISH THERMAL UNITS PER HOUR
BV	BALL VALVE
BVA	BALANCING VALVE ASSEMBLY
C	
C.A.P.	CEILING ACCESS PANEL
CA	COMPRESSED AIR
CFH	CUBIC FEET PER HOUR
CFM	CUBIC FEET PER MINUTE
CISPI	CAST IRON SOIL PIPE INSTITUTE
CO	CLEANOUT
COND/CD	CONDENSATE/CONDENSATE DRAIN
CONT	CONTINUATION, CONTINUE
COOR	COORDINATE
CP	CIRCULATING PUMP (DOMESTIC HOT WATER)
CRAC	COMPUTER ROOM AIR CONDITIONER
CSA	CANADIAN STANDARDS ASSOCIATION
CU FT	CUBIC FEET
CW	COLD WATER
CWV	COMBINATION WASTE & VENT
D	
DCW	DOMESTIC COLD WATER
DEG	DEGREE
DET	DETAIL
DHW	DOMESTIC HOT WATER
DI	DEIONIZED WATER
DIA, DIA.	DIAMETER
DLD	DRIP LEG DRAIN
DN	DOWN
DOAS	DEDICATED OUTSIDE AIR UNIT
DP	DROP
DSC	DOWNSPOUT COVER
DTV	DRAIN TEMPERING VALVE
DU	DEIONIZER UNIT
DWG, DWG.	DRAWING
DWV	DRAINAGE WASTE AND VENT
E	
EEW	EMERGENCY EYE/FACE WASH
EFC	ELECTRONIC FLOW CONTROLLER
EFF	EFFICIENCY
ELEV, EL	ELEVATION
ELL	ELBOW
EPDM	ETHYLENE PROPYLENE DIENE MONOMER
EQV	EARTHQUAKE VALVE
ESE	EMERGENCY SHOWER & EYE/FACE WASH
ET	EXPANSION TANK
ETP	ELECTRONIC TRAP PRIMER
EWC	ELECTRIC WATER COOLER
EXH	EXHAUST
F	
F.F.E., FFE	FINISH FLOOR ELEVATION
FCO	FLOOR CLEANOUT
FCU	FAN COIL UNIT
FD	FLOOR DRAIN
FDA	FOOD AND DRUG ADMINISTRATION
FLG	FLANGE
FRL	FILTER-REGULATOR-LUBRICATOR
FS	FLOOR SINK
FT	FOOT OR FEET
G	
G	NATURAL GAS (LOW PRESSURE, NO GREATER THAN 14" w.c.)
GCO	GRADE CLEANOUT
GM	GAS METER
GPM	GALLONS PER MINUTE
GPR	GAS PRESSURE REGULATOR
GWH	GAS WATER HEATER
H	
HB	HOSE BIBB
HD	HUB DRAIN
HP	HORSEPOWER
HR	HOUR
HV	HEATING & VENTILATING
HVAC	HEATING,VENTILATION, AIR CONDITIONING
HW	DOMESTIC HOT WATER (SUPPLY)
HWR	DOMESTIC HOT WATER RETURN
HZ	HERTZ
I	
IBC	INTERNATIONAL BUILDING CODE
ICW	INDUSTRIAL COLD WATER
IE, I.E.	INVERT ELEVATION
ILDFA	IGNITABLE LIQUID DRAINAGE FLOOR ASSEMBLY
IMB	ICE MAKER BOX
IMC	INTERNATIONAL MECHANICAL CODE
INT.	INTEGRAL
IPC	INTERNATIONAL PLUMBING CODE
ISO	INTERNATIONAL ORGANIZATION FOR STANDARDIZATION
IW	INDIRECT WASTE, INDUSTRIAL WASTE
IWH	INSTANTANEOUS WATER HEATER
IWR	INDIRECT WASTE RECEPTOR
K	
KVA	KILOVOLT AMPERE
KW	KILOWATTS
L	
LAV, LAVS	LAVATORY, LAVATORIES
LB	LAUNDRY BOX
M	
M.A.W.P.	MAXIMUM ALLOWABLE WORKING PRESSURE
MAX, MAX.	MAXIMUM
MIN, MIN.	MINIMUM; MINUTES
MMF	MULTI MODE FIBER
MPG	MEDIUM PRESSURE GAS (1 TO 5 PSI)
MS	MOP SINK
MTD	MOUNTED
MV	MIXING VALVE (POINT OF USE)
N	
N.C.	NORMALLY CLOSED VALVE
NEMA	NATIONAL ELECTRIACL MANUFACTURERS ASSOCIATION
NFPA	NATIONAL FIRE PROTECTION ASSOCIATION
NG	NATURAL GAS (LOW PRESSURE, NO GREATER THAN 14" w.c.)
NOx	NITROGEN OXIDES
NPT	NATIONAL PIPE THREAD
NPTF	NATIONAL PIPE THREAD FEMALE
NSF	NATIONAL SANITATION FOUNDATION
NTPM	NATIONAL PIPE THREAD MALE
O	
O.C.	ON CENTER
OD	OVERFLOW DRAIN
OSHA	OCCUPATIONAL SAFETY & HEALTH ADMINISTRATION
OWS	OIL-WATER SEPARATOR
P	
PCA	PRECONDITIONED AIR
PCD	PUMPED CONDENSATE
PDI	PLUMBING AND DRAINAGE INSTITUTE
PDV	PNEUMATIC DRAIN VALVE
PF	PRE-FILTER
PG	PRESSURE GAUGE
PRV	PRESSURE REDUCING VALVE (WATER)
PSI, PSIG	POUNDS PER SQUARE INCH (GAUGE)
PTFE	POLYTETRAFLUOROETHYLENE
Q	
QD	QUICK DISCONNECT (COUPLER)
QTY	QUANTITY
R	
(R)	RAISED ACCESS FLOOR
RAD	REFRIGERATED AIR DRYER
RD	ROOF DRAIN
RET	RETURN
RH	ROOF HYDRANT
RO	REVERSE OSMOSIS
RPBFP	REDUCED PRESSURE BACKFLOW PREVENTER
RPM	REVOLUTIONS PER MINUTE
RPZ	REDUCED PRESSURE ZONE
S	
S, SAN	SANITARY SEWER
SCFH	STANDARD CUBIC FEET PER HOUR
SCFM	STANDARD CUBIC FEET PER MINUTE
SD	STORM DRAIN
SF	SQUARE FEET
SH	SHOWER
SHD	SHOWER DRAIN
SK	SINK, KITCHEN SINK
SOV	SHUT OFF VALVE
SP	SUMP PUMP
SS	SERVICE SINK
T	
T&P	TEMPERATURE & PRESSURE RELIEF VALVE
T.O.P.	TOP OF PIPE
TEFC	TOTALLY ENCLOSED FAN-COOLED
TEMP	TEMPERATURE
TMV	THERMOSTATIC MIXING VALVE
TP	TRAP PRIMER
TW	TEMPERED WATER, TEPID WATER
TYP, TYP.	TYPICAL
U	
UFC	UNIFIED FACILITIES CRITERIA
UL	UNDERWRITERS' LABORATORIES
UR	URINAL
UTR	UP THROUGH ROOF
UV	ULTRA VIOLET
V	
V	VENT
VB	VACUUM BREAKER
VOL	VOLTAGE
VOR	VALVE ON RISER
VP	VACUUM PUMP
VTR	VENT THRU ROOF
W	
W	WASTE
w.c.	WATER COLUMN
W/	WITH
WAP	WALL ACCESS PANEL
WC	WATER CLOSET
WCO	WALL CLEANOUT
WF	WASH FOUNTAIN
WH	WALL HYDRANT
WHA	WATER HAMMER ARRESTER
WS	WATER SOFTENER
WT	WEIGHT
Y	
YH	YARD HYDRANT

DETAIL REFERENCE KEY

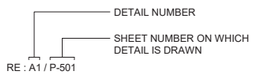

GENERAL NOTES

A. WORK MUST BE PERFORMED IN ACCORDANCE WITH THE FOLLOWING CODES, STANDARDS, AND GUIDELINES: INTERNATIONAL BUILDING CODE (IBC) 2024, INTERNATIONAL MECHANICAL CODE (IMC) 2024, INTERNATIONAL PLUMBING CODE (IPC) 2024, NATIONAL FIRE PROTECTION ASSOCIATION (NFPA) STANDARDS, UNIFIED FACILITIES CRITERIA (UFC), OCCUPATIONAL SAFETY AND HEALTH ADMINISTRATION (OSHA) GUIDELINES.

B. THE DRAWINGS ARE NOT INTENDED FOR FINAL SYSTEM INSTALLATION AND ARE NOT TO BE SCALED. GENERAL ROUTING OF PIPING, THE GENERAL LOCATION OF EQUIPMENT, FIXTURES, AND SPECIALTIES ARE INDICATED BUT DO NOT INDICATE OFFSETS, TRANSITIONS, AND DETAIL REQUIRED FOR FINAL INSTALLATION. DETAILS OF PIPING, AND EQUIPMENT ARE PROVIDED FOR CONVENIENCE AND INDICATE MINIMUM INSTALLATION REQUIREMENTS WITH RESPECT TO THE WORK OF THIS DIVISION. PROVIDE A COMPLETE SYSTEM INCLUDING REQUIRED OFFSETS, TRANSITIONS, AND ADJUSTMENTS FOR THE LOCATION OF ALL WATER, SANITARY, CONDENSATE, AND OTHER SYSTEMS REQUIRED FOR THE FINAL INSTALLATION.

C. REVIEW AND EXAMINE THE CONTRACT DOCUMENTS. LAYOUT AND COORDINATE THE WORK REQUIRED USING THE DIMENSIONED ARCHITECTURAL AND STRUCTURAL CONTRACT DRAWINGS AND THE CONTRACT DRAWINGS OF OTHER TRADES PRIOR TO PURCHASE AND INSTALLATION OF EQUIPMENT AND FABRICATION AND INSTALLATION OF SYSTEMS. COORDINATE AND SCHEDULE THE INSTALLATION OF WORK UNDER THIS DIVISION WITH THE WORK OF OTHER DIVISIONS INVOLVED TO PREVENT CONFLICT OF WORK AND PROVIDE A COMPLETED INSTALLATION.

D. INSTALL EQUIPMENT IN ACCORDANCE WITH THE MANUFACTURER'S PRINTED INSTALLATION INSTRUCTIONS, THE SPECIFICATIONS, AND REVIEWED SHOP DRAWINGS. SERVICE AND OPERATION CLEARANCES MUST BE PROVIDED AROUND THE EQUIPMENT IN ACCORDANCE WITH THE CONTRACT DRAWINGS AND MANUFACTURER'S PRINTED REQUIREMENTS AND RECOMMENDATIONS.

E. PROVIDE DETAILED AND DIMENSIONED COORDINATION DRAWINGS INCLUDING MECHANICAL AND ELECTRICAL ROOMS SHOWING PIPING, SPECIALTIES, SUPPORTS EQUIPMENT, CONTROLS, AND OTHER COMPONENTS. COORDINATE WITH PROJECT BUILDING INFORMATION MODELING (BIM) REQUIREMENTS.

F. IN GENERAL, PIPING MUST BE RUN CONCEALED IN SUSPENDED CEILING AND SPACES PROVIDED UNLESS NOTED OR INDICATED OTHERWISE.

G. DEAD ENDS MUST BE PROHIBITED IN THE INSTALLATION OF THE DRAINAGE SYSTEM (EXCEPT FUTURE PROVISIONS).

H. SLOPES AND INVERT ELEVATIONS MUST BE VERIFIED BEFORE PIPING IS INSTALLED TO INSURE THAT PROPER SLOPES ARE MAINTAINED.

I. WATER LINES MUST HAVE SHUT-OFF VALVES AT CONNECTIONS OF FIXTURES AND EQUIPMENT. PROVIDE DRAIN VALVES AT PIPING LOW POINTS.

J. SANITARY DRAINAGE PIPING SHOWN IS BELOW SLAB OF THE FLOOR PLAN SHOWN, UNLESS OTHERWISE NOTED.

K. VALVES AND FITTINGS MUST BE LINE SIZE UNLESS NOTED OTHERWISE.

L. PROVIDE ACCESS DOORS AT LOCATIONS OF VALVES AND OTHER COMPONENTS IF LOCATED ABOVE HARD CEILING OR INSIDE WALLS.

M. AVOID PIPING INSTALLATION IN ELECTRICAL ROOMS AND TELECOM INFRASTRUCTURE ROOMS, UNLESS OTHERWISE NOTED.

N. FIRE RATED FLOOR AND WALL PENETRATIONS MUST BE SEALED WITH UNDERWRITERS' LABORATORIES (UL) APPROVED FIRE STOPPING MATERIAL PER A UL CONFIGURATION.

O. VENT THROUGH A ROOF MUST NOT BE LESS THAN 2" IN DIAMETER, BUT IN NO EVENT SMALLER THAN THE REQUIRED VENT PIPE. ANY INCREASE IN THE SIZE OF THE VENT MUST BE MADE NOT LESS THAN 1 FOOT INSIDE THE THERMAL ENVELOPE OF THE BUILDING AND TERMINATE NOT LESS THAN 10 INCHES ABOVE THE ROOF.

P. THE MAXIMUM FLOW VELOCITY OF THE DOMESTIC HOT WATER RETURN PIPING MUST NOT BE MORE THAN 2 FEET PER SECOND (FPS).

Q. ALL PRODUCTS, MATERIALS, PLUMBING FIXTURES, AND EQUIPMENT THAT ARE PROVIDED MUST COMPLY WITH BUY AMERICAN ACT.

R. EACH WALL HYDRANT, AND ROOF HYDRANT MUST BE PROVIDED WITH SHUTOFF VALVE.

S. PLUMBING FIXTURES REQUIRING TEMPERED OR TEPID WATER MUST BE SUPPLIED THROUGH POINT-OF-USE MIXING VALVE THAT MUST BE ACCESSIBLE FOR FIELD ADJUSTMENT.

T. PROVIDE 12" BY 12" ACCESS PANEL ON SHUT-OFF VALVES, TRAP PRIMERS, AND WATER HAMMER ARRESTERS.

U. SLOPE OF SAN WASTE PIPING IS 1/4" PER FOOT FOR PIPING 2-1/2" AND LESS AND 1/8" PER FOOT FOR PIPING 3" AND ABOVE.

V. NEW CONNECTIONS TO EXISTING WATER LINES MUST BE DISINFECTED PER IAW AMERICAN WATER WORK ASSOCIATION C651.

SEISMIC NOTES

A. A. SEISMIC RESTRAINT SYSTEMS FOR PIPING, DUCTWORK AND EQUIPMENT IS A DELEGATED DESIGN. PER SECTION 23 05 48 19. IT IS THE CONTRACTOR'S RESPONSIBILITY TO DESIGN A SYSTEM THAT IS IN FULL COMPLIANCE WITH THE LISTED CRITERIA.

DESIGN CRITERIA

WATER SERVICE FLOW TEST DATA

WATER PIPE SIZES ARE BASED ON A MINIMUM WORKING PRESSURE OF 70 PSIG AT A FLOW RATE OF 55 GPM AT THE LOCATION WHERE THE MAIN SERVICE ENTERS THE BUILDING.

STORM DRAINAGE DATA

THE PRIMARY STORM DRAINAGE IS DISCHARGED VIA STORM DRAIN PIPING AND OVERFLOW PIPING TO EXISTING SITE AREA DRAINS. THE PRIMARY AND OVERFLOW STORM DRAIN PIPING WILL RUN DOWN THE EXTERIOR OF THE BUILDING. THE STORM DRAIN PIPES ARE CONNECTING TO EXISTING ROOF DRAINS (PRIMARY AND OVERFLOW). THE NEW STORM DRAIN PIPES WILL BE CONNECTING TO THE EXISTING STORM DRAIN PIPES AT THE UNDERSIDE OF THE ROOF DECK.

SANITARY DRAINAGE

SANITARY DRAINAGE IS CONNECTING TO EXISTING 6" UNDERGROUND PIPE AT 4 NEW POINTS OF CONNECTIONS. EXISTING LATERALS WILL BE ABANDONED. SANITARY DRAINGE LOAD IS NOT INCREASING LOAD OF EXISTING LATERAL. ABANDONED DFU LOAD IS 32 DFU. NEW CONNECTED LOAD IS 30 DFU. NO INCREASE IN DFU'S ON EXISTING 6" MAIN LINE.

NATURAL GAS

NEW LOW PRESSURE NATURAL GAS REGULATOR (14" W.C. OUTLET) GAS METER, AND EARTHQUAKE VALVE TO BE INSTALLED AT EXISTING NATURAL GAS SERVICE STUB UP.

CODE COMPLIANCE

THE PLUMBING EQUIPMENT IN THESE DRAWINGS ARE IN COMPLIANCE WITH THE 2024 INTERNATIONAL PLUMBING CODE AND UFC 3-420-01, 2019 ASHRAE 90.1 AND 2024 INTERNATIONAL ENERGY CONSERVATION CODE.

STATE OF OHIO
GREGORY HINTE
E-87905
4/28/26
REGISTERED
PROFESSIONAL ENGINEER

MARK	DESCRIPTION	DATE

ISSUE DATE: MAY 2026
ANG PROJECT NO.: PBXP222050
CONTRACT NO.: FA8903-21-D-0008
TASK ORDER NO.: W50SBR23F0009

DESIGNED BY: J. WEST
DRAWN BY: J. WEST
CHECKED BY: C. KORPASH
SUBMITTED BY: D. PEARSON
SIZE: ANSI D

OHIO AIR NATIONAL GUARD
MANSFIELD LAHM AIR NATIONAL GUARD BASE, OH

JACOBS GOVERNMENT SERVICES
2600 MICHELSON SR, STE 500
IRVINE, CA 92612

MANSFIELD LAHM AIR NATIONAL GUARD BASE, OH
REPAIR B403 FOR CYBER
FA877006
PLUMBING GENERAL NOTES AND ABBREVIATIONS

SHEET ID
P-001

TYPE B-3 FINAL

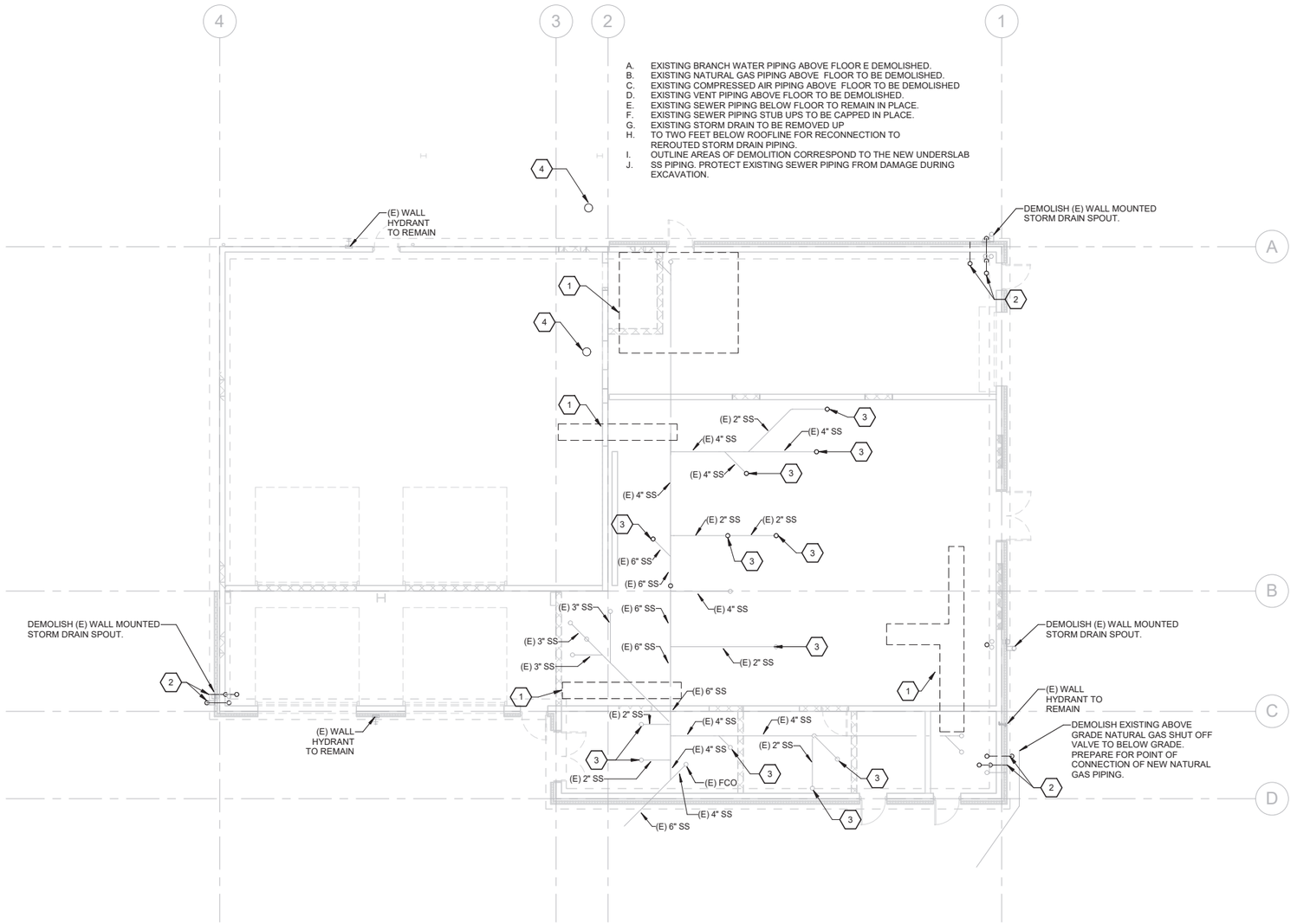

A1 PLUMBING DEMOLITION GROUND FLOOR PLAN
SCALE 1/8" = 1'-0"

GENERAL SHEET NOTES

A. COORDINATE DEMOLITION/TRENCHING OF EXISTING CONCRETE FLOOR SLAB WITH PLUMBING SCOPE OF WORK FOR NEW FIXTURE LOCATION. PREPARE SLAB FOR NEW FLOOR FINISH.

DEMOLITION KEYNOTES

1. OUTLINE REPRESENTS AREA OF SAW CUT OF EXISTING SLAB TO LAY NEW SEWER PIPING. PRIOR TO SAWCUT OF SLAB, CAMERA AND LOCATE EXISTING SEWER PIPE AND SIZE USING DRAIN CAMERA WITH SONDE. SEE STRUCTURAL DETAIL ON STRUCTURAL DRAWING FOR DOWEL AND SAW CUT INFORMATION.
2. EXISTING 6" STORM PIPES DEMOLISHED BELOW ROOF LINE. PROTECT IN PLACE EXISTING ROOF DRAINS AND EXISTING PIPE FOR POINT OF RECONNECT.
3. EXISTING PIPE TO REMAIN. CAP RISER BELOW FINISHED SURFACE. MATCH FINISHED FLOOR COVER TO SURROUNDING FINISH FLOOR.
4. CONTRACTOR TO FIELD LOCATE EXISTING SPRINKLER UNDERGROUND LINE, CUT AND CAP AND ABANDON IN PLACE.

GRAPHIC SCALE(S)

8 6 4 2 0 8 16
SCALE: 1/8"=1'-0"

PLAN NORTH

STATE OF OHIO
GREGORY HINTE
E-87905
4/28/26
REGISTERED PROFESSIONAL ENGINEER

MARK	DESCRIPTION	DATE

DESIGNED BY: J. WEST
DRAWN BY: J. WEST
CHECKED BY: C. KORPASH
SUBMITTED BY: D. PEARSON
SIZE: ANSI D
ISSUE DATE: MAY 2026
ANG PROJECT NO.: PBXP222050
CONTRACT NO.: FA8903-21-D-0008
TASK ORDER NO.: W50S8R23F0009

OHIO AIR NATIONAL GUARD
MANSFIELD LAHM AIR NATIONAL GUARD BASE, OH

JACOBS GOVERNMENT SERVICES
2600 MICHELSON SR, STE 500
IRVINE, CA 92612

MANSFIELD LAHM AIR NATIONAL GUARD BASE, OH
REPAIR B403 FOR CYBER
FA877006
PLUMBING DEMOLITION GROUND FLOOR PLAN

SHEET ID
PD101

TYPE B-3 FINAL

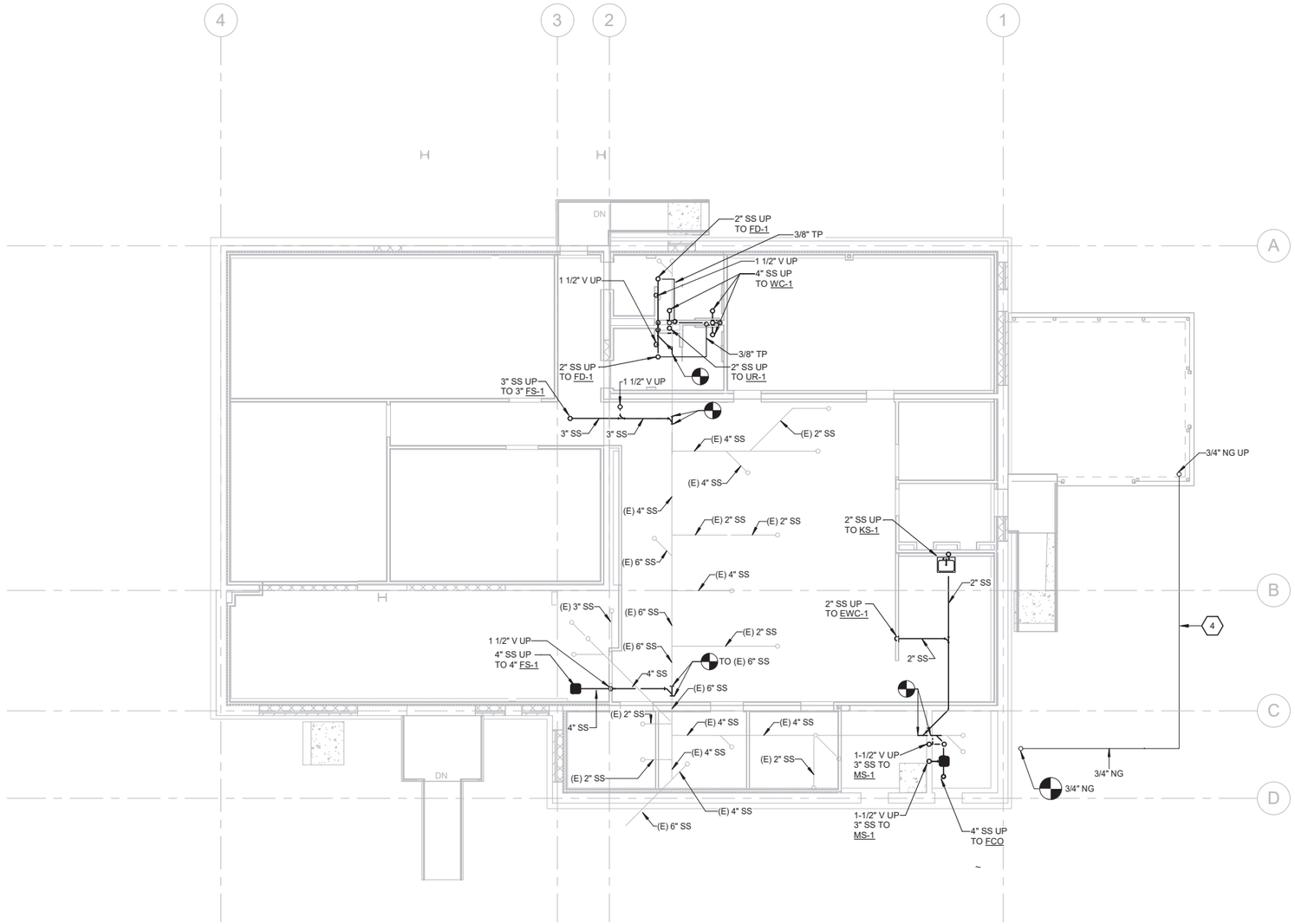

A1 PLUMBING UNDERGROUND FLOOR PLAN
SCALE 1/8" = 1'-0"

GENERAL SHEET NOTES

A. MECHANICAL EQUIPMENT ARE SHOWN FOR REFERENCE ONLY, SEE MECHANICAL DRAWINGS.

B. FIELD LOCATE UTILITY POC TO MECHANICAL EQUIPMENT.

C. SEE PLUMBING FIXTURE SCHEDULE ON SHEET P-601 FOR UTILITY CONNECTIONS (WATER, SEWER/WASTE, AND VENT) TO EACH FIXTURE.

#SHEET KEYNOTES

4. NATURAL GAS PIPING BURIED MINIMUM 36" BELOW FINISHED GRADE.

GRAPHIC SCALE(S)

8 6 4 2 0 8 16
SCALE: 1/8"=1'-0"

PLAN NORTH

STATE OF OHIO
GREGORY HINTE
E-87905
4/28/26
REGISTERED PROFESSIONAL ENGINEER

MARK	DESCRIPTION	DATE

DESIGNED BY: J. WEST
DRAWN BY: J. WEST
CHECKED BY: C. KORPASH
SUBMITTED BY: D. PEARSON
SIZE: ANSI D

ISSUE DATE: MAY 2026
ANG PROJECT NO.: PBXP222050
CONTRACT NO.: FA8903-21-D-0008
TASK ORDER NO.: W50S8R23F0009

OHIO AIR NATIONAL GUARD
MANSFIELD LAHM AIR NATIONAL GUARD BASE, OH

JACOBS GOVERNMENT SERVICES
2600 MICHELSON SR, STE 500
IRVINE, CA 92812

MANSFIELD LAHM AIR NATIONAL GUARD BASE, OH
REPAIR B403 FOR CYBER
FA877006
PLUMBING UNDERGROUND FLOOR PLAN

SHEET ID
P-101

TYPE B-3 FINAL

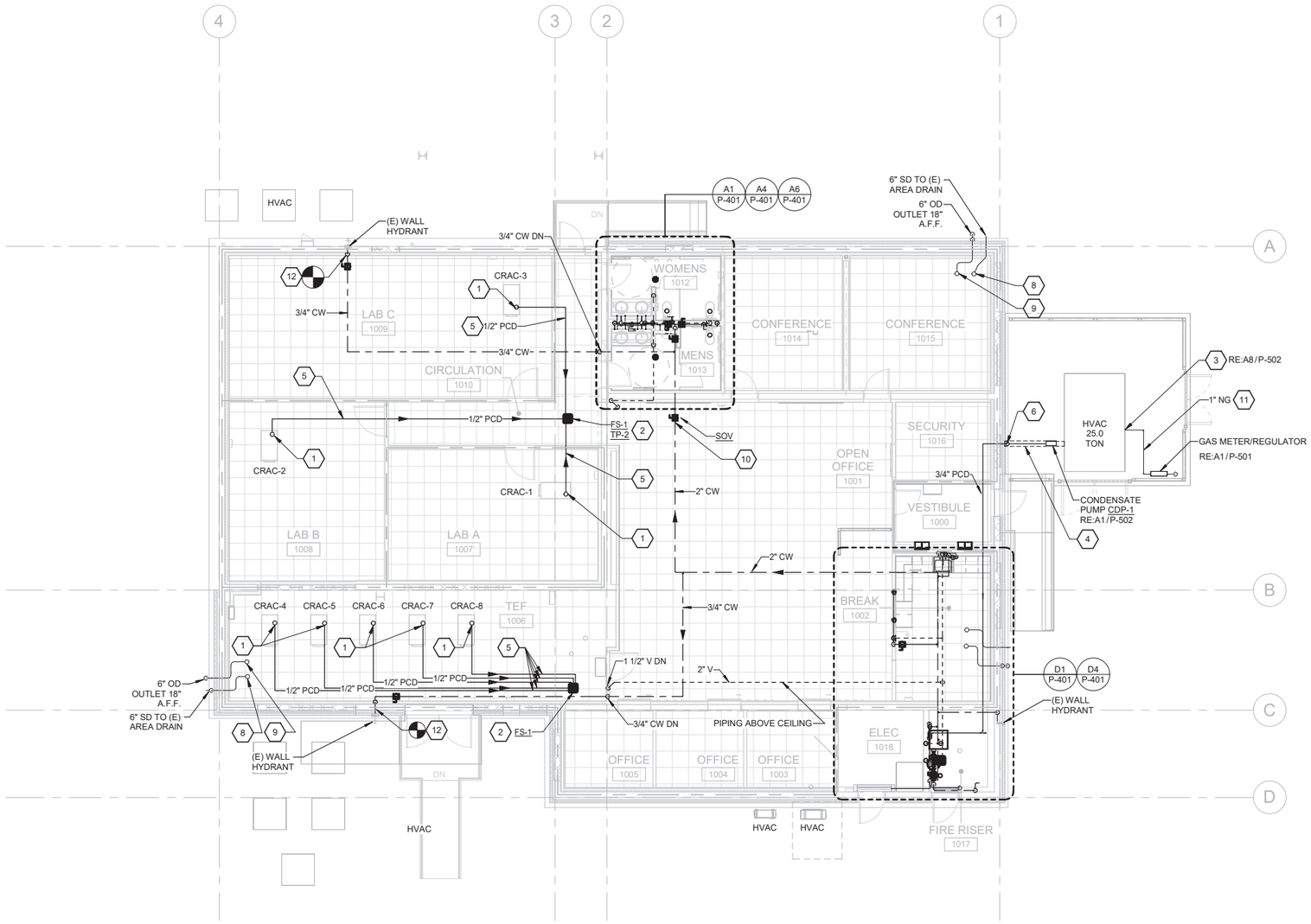

A1 PLUMBING OVERALL GROUND FLOOR PLAN

SCALE 1/8" = 1'-0"

GENERAL SHEET NOTES

A. MECHANICAL EQUIPMENT ARE SHOWN FOR REFERENCE ONLY, SEE MECHANICAL DRAWINGS.

B. FIELD LOCATE UTILITY POC TO MECHANICAL EQUIPMENT.

C. SEE PLUMBING FIXTURE SCHEDULE ON SHEET P-601 FOR UTILITY CONNECTIONS (WATER, SEWER/WASTE, AND VENT) TO EACH FIXTURE.

#SHEET KEYNOTES

1. POINT OF CONNECTION TO INTEGRATED DUAL-FLOAT CONDENSATE PUMP INTEGRAL TO HVAC CRAC UNIT.
2. FLOOR SINK IS LOCATED AT SLAB BELOW ACCESSIBLE RAISED FLOOR.
3. 3/4" NATURAL GAS CONNECTION TO HVAC.
4. HEAT TRACE ABOVE GROUND CONDENSATE PIPE. PLUG IN 120V/1 HEAT TRACE INTO OUTDOOR WEATHER PROOF RECEPTACLE AND WRAP PIPE PER MANUFACTURERS INSTRUCTIONS.
5. FLEXIBLE 1/2" PUMPED DISCHARGE TUBING LOCATED BELOW RAISED ACCESS FLOOR. NO SLOPE REQUIRED.
6. 3/4" INSULATED PUMPED DISCHARGE PIPING UP THE EXTERIOR WALL.
8. 6" STORM DRAIN PRIMARY PIPE UP TO POINT OF CONNECTION TO EXISTING PRIMARY ROOF DRAIN.
9. 6" STORM DRAIN OVERFLOW PIPE UP TO POINT OF CONNECTION TO EXISTING OVERFLOW ROOF DRAIN.
10. WATER SOV IN CEILING WITH 12"X12" CEILING ACCESS PANEL
11. SUPPORT PIPE WITH CONCRETE BASE AND UNISTRUT PIPE CLAMP.
12. POINT OF CONNECTION FOR 3/4" CW TO EXISTING WALL HYDRANT. PROVIDE SHUT OFF VALVE BELOW RAISED ACCESS FLOOR.

GRAPHIC SCALE(S)

8 6 4 2 0 8 16

SCALE: 1/8"=1'-0"

PLAN NORTH

STATE OF OHIO
GREGORY HINTE
E-87905
4/28/26
REGISTERED
PROFESSIONAL ENGINEER

MARK	DESCRIPTION	DATE

DESIGNED BY: J. WEST
DRAWN BY: J. WEST
CHECKED BY: C. KORPASH
SUBMITTED BY: S.PEARSON
ISSUE DATE: MAY 2026
ANG PROJECT NO.: PBXP222050
CONTRACT NO.: FA8803-21-D-0008
TASK ORDER NO.: W50S8R23F0009
SIZE: ANSI D

OHIO AIR NATIONAL GUARD
MANSFIELD LAHM AIR NATIONAL GUARD BASE, OH

JACOBS GOVERNMENT SERVICES
2600 MICHELSON SR, STE 500
IRVINE, CA 92612

MANSFIELD LAHM AIR NATIONAL GUARD BASE, OH
REPAIR B403 FOR CYBER
FA8777006
PLUMBING OVERALL GROUND FLOOR PLAN

SHEET ID
P-102

TYPE B-3 FINAL

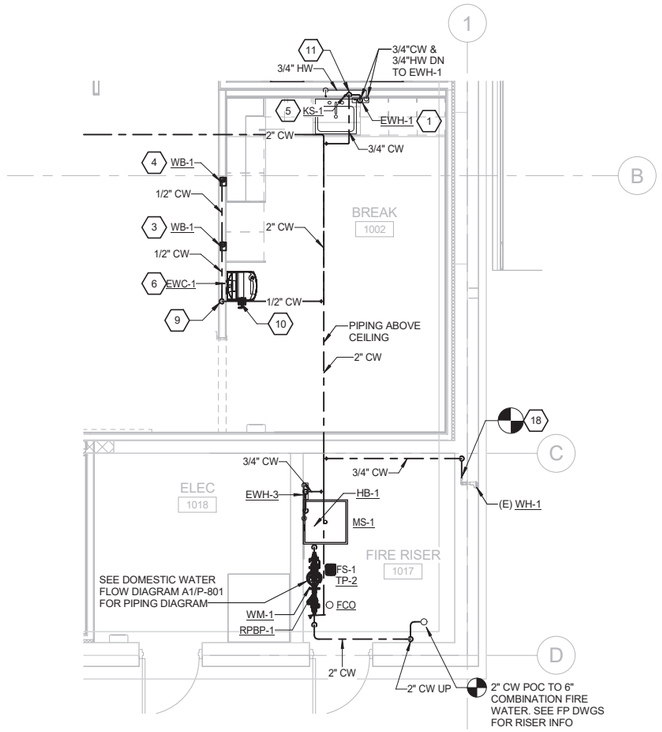

D1 ENLARGED BREAK & FIRE RISER CW
SCALE 1/4" = 1'-0"

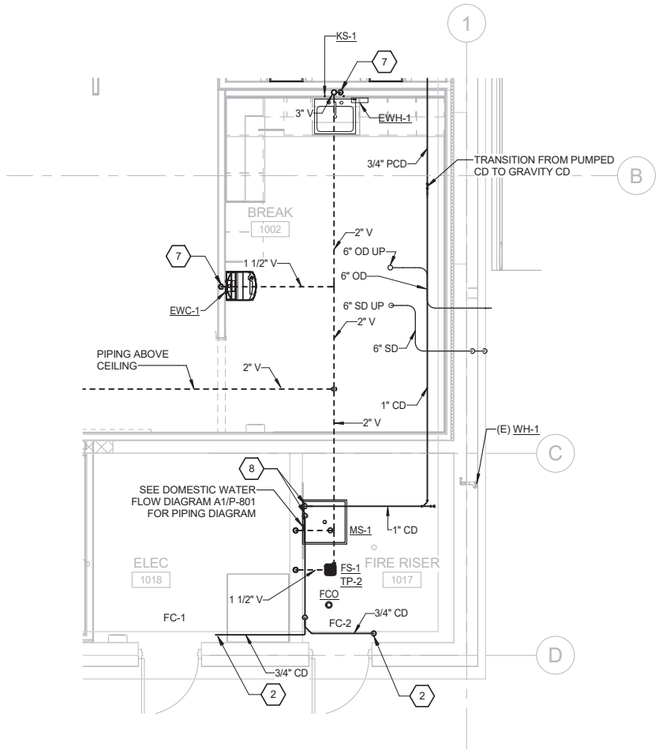

D4 ENLARGED BREAK & FIRE RISER SS/V, COND & STORM
SCALE 1/4" = 1'-0"

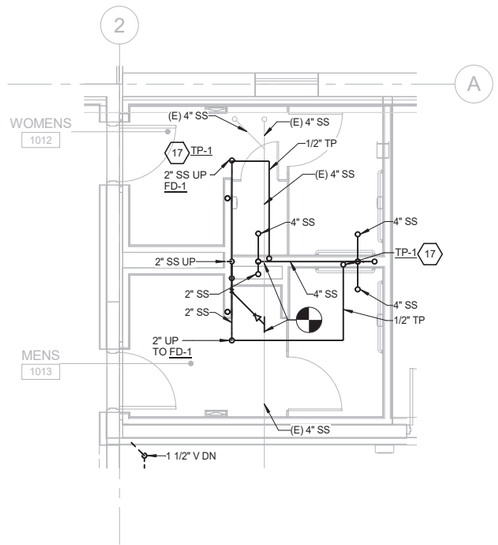

A1 MENS 1014, WOMENS 1013 - SS BELOW FLOOR
SCALE 1/4" = 1'-0"

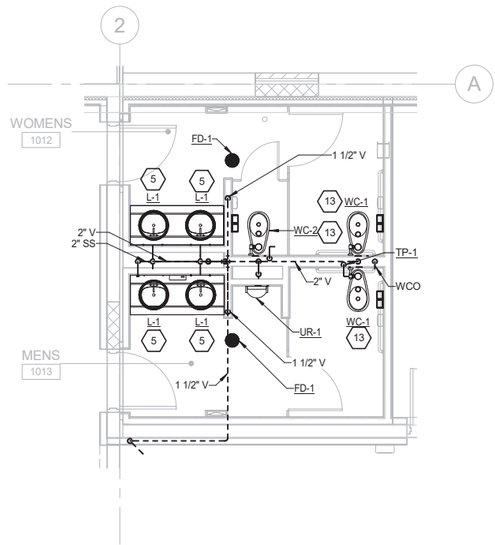

A4 MENS 1014, WOMENS 1013 - SS & V
SCALE 1/4" = 1'-0"

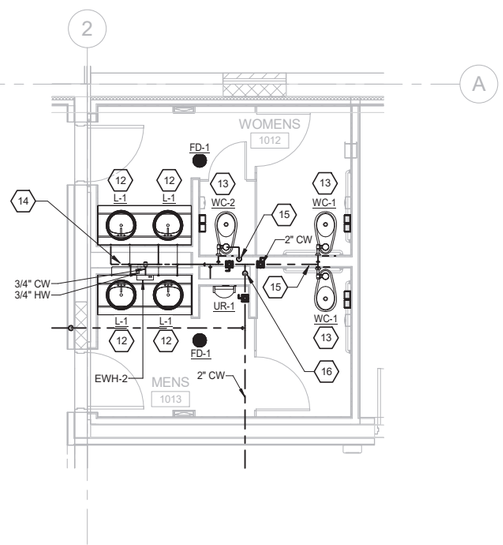

A6 MENS 1014, WOMENS 1013 - CW
SCALE 1/4" = 1'-0"

GENERAL SHEET NOTES

A. MECHANICAL EQUIPMENT ARE SHOWN FOR REFERENCE ONLY, SEE MECHANICAL DRAWINGS.

B. FIELD LOCATE UTILITY POC TO MECHANICAL EQUIPMENT.

C. SEE PLUMBING FIXTURE SCHEDULE ON SHEET P-601 FOR UTILITY CONNECTIONS (WATER, SEWER/WASTE, AND VENT) TO EACH FIXTURE.

#SHEET KEYNOTES

1. 1/2" CW TO INSTANTANEOUS WATER HEATER. 1/2" HW FROM EHW TO POINT OF USE MIXING VALVE PER LAV.
2. 3/4" CD CONNECTED TO WALL MOUNTED HVAC UNIT.
3. REFRIGERATOR CONNECTION: PROVIDE 1/2"CW LINE TO WALL BOX
4. COFFEE MAKER CONNECTION: PROVIDE 1/2"CW LINE TO WALL BOX
5. 1/2" CW, 1/2" HW, 2" SS, 1-1/2" V SERVING FIXTURE
6. 1/2" CW, 2" SS, 1-1/2" V SERVING FIXTURE
7. 2" SS DN, 1 1/2" V UP
8. 3/4" CONDENSATE TO SPILL INTO MS-1 WITH AIRGAP
9. 1/2" CW DN
10. SHUT OFF VALVE
11. 3/4" CW DN
12. 1/2" CW & 1/2" HW TO EACH LAV/SINK
13. 1" CW, 4" SS, 2" V SERVING FIXTURE
14. WATER HAMMER ARRESTOR WITH ACCESS PANEL. SEE PLUMBING FIXTURE SCHEDULE
15. 1/2" CW FROM WATER CLOSET TRAP PRIMER, ROUTE 1/2" CW LINE(S) DOWN BELOW FLOOR TO FLOOR DRAIN PRIMER TAP
16. 2" CW DN
17. FD-1 TRAP PRIMER SUPPLIED FROM FLUSH VALVE TRAP PRIMER TP-1.
18. POINT OF CONNECTION FOR 3/4" CW TO EXISTING WALL HYDRANT. PROVIDE SHUT OFF VALVE BELOW RAISED ACCESS FLOOR.

GRAPHIC SCALE(S)

4 3 2 1 0 4 8
SCALE: 1/4"=1'-0"

PLAN NORTH

STATE OF OHIO
GREGORY HINTE
E-87905
4/28/26
REGISTERED
PROFESSIONAL ENGINEER

MARK	DESCRIPTION	DATE

DESIGNED BY: J. WEST
DRAWN BY: J. WEST
CHECKED BY: C. KORPASH
SUBMITTED BY: D. PEARSON
DATE: ANSI D
ISSUE DATE: MAY 2026
ANG PROJECT NO.: PBXP222050
CONTRACT NO.: FA8903-21-D-0008
TASK ORDER NO.: W50SBR23P0009

OHIO AIR NATIONAL GUARD
MANSFIELD LAHM AIR NATIONAL GUARD BASE, OH

JACOBS GOVERNMENT SERVICES
2600 MICHELSON SR, STE 500
IRVINE, CA 92612

MANSFIELD LAHM AIR NATIONAL GUARD BASE, OH
REPAIR B403 FOR CYBER
FA877006
PLUMBING ENLARGED PLANS

SHEET ID
P-401

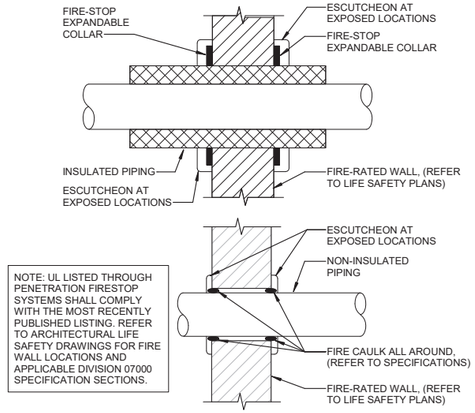

D1 TYPICAL PENETRATION FOR PIPE THRU FIRE RATED PARTITIONS

SCALE NTS

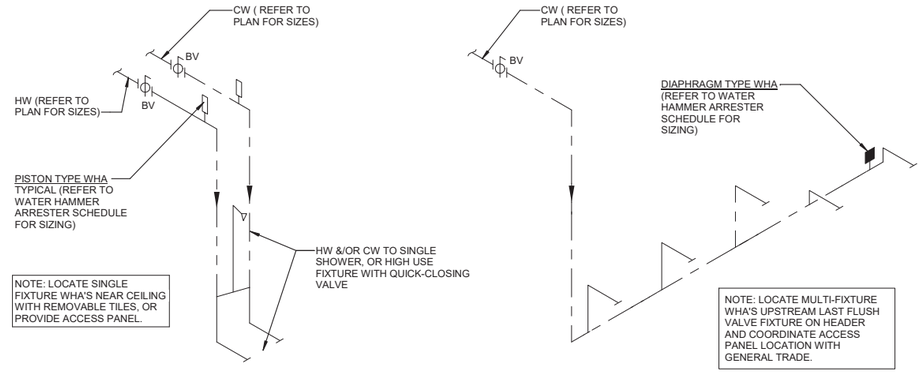

D6 WATER HAMMER ARRESTOR DETAIL

SCALE NTS

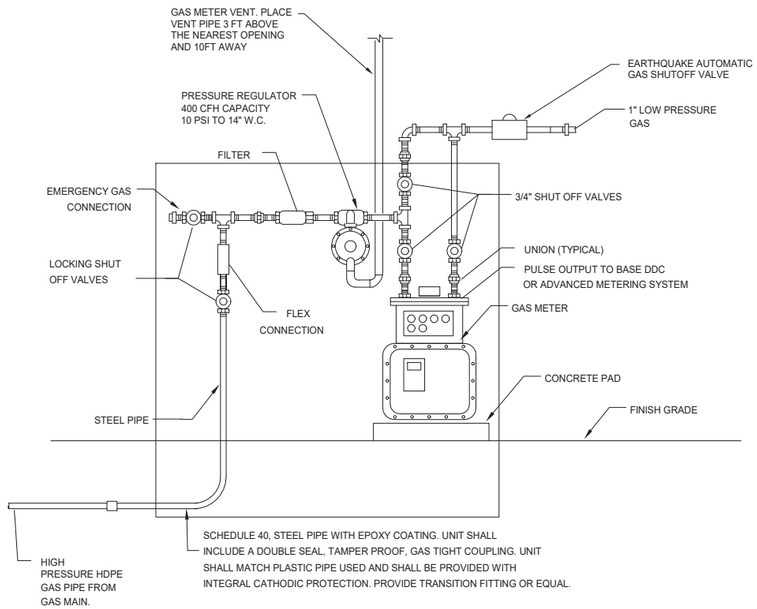

A1 NATURAL GAS REGULATOR

SCALE NTS

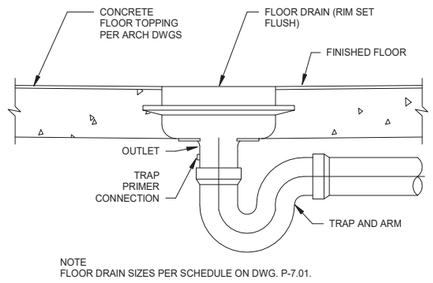

A5 FLOOR DRAIN

SCALE NTS

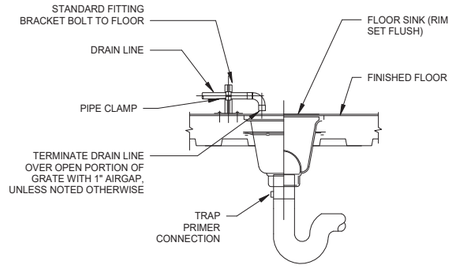

A6 INDIRECT WASTE TO FLOOR SINK

SCALE NTS

STATE OF OHIO
GREGORY HINTE
E-87905
4/28/26
REGISTERED
PROFESSIONAL ENGINEER

MARK	DESCRIPTION	DATE

DESIGNED BY: J. VIEST
DRAWN BY: J. VIEST
CHECKED BY: C. KORPASH
SUBMITTED BY: D. PEARSON
SIZE: ANSI D
ISSUE DATE: MAY 2026
ANG PROJECT NO.: PBXP222050
CONTRACT NO.: FA8803-21-D-0008
TASK ORDER NO.: W50SBR23F0009

OHIO AIR NATIONAL GUARD
MANSFIELD LAHM AIR NATIONAL GUARD BASE, OH

JACOBS GOVERNMENT SERVICES
2600 MICHELSON SR. STE 500
IRVINE, CA 92612

MANSFIELD LAHM AIR NATIONAL GUARD BASE, OH
REPAIR B403 FOR CYBER
FA877006
PLUMBING DETAILS

SHEET ID
P-501

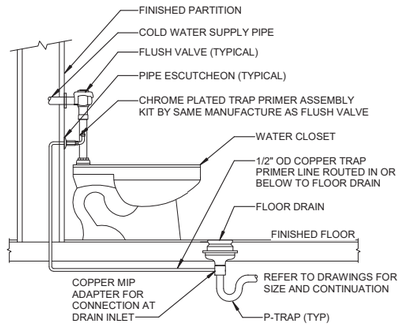

E1 WALL MOUNTED WATER CLOSET FLUSH VALVE TRAP PRIMER

SCALE: NTS

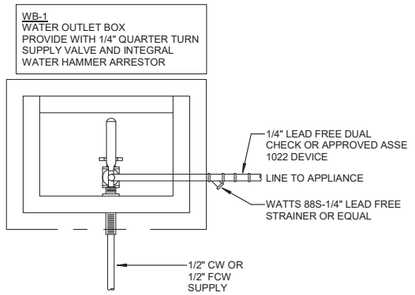

NOTES:

A. COORDINATE ELEVATION WITH COUNTER/BACKSPLASH WHERE MOUNTED ABOVE COUNTERTOP PRIOR TO INSTALLATION.

B. COORDINATE ELEVATION/LOCATION WITH APPROVED EQUIPMENT CUTSHEETS PRIOR TO INSTALLATION WHERE MOUNTED BEHIND REFRIGERATORS.

E5 WATER BOX DETAIL

SCALE: NTS

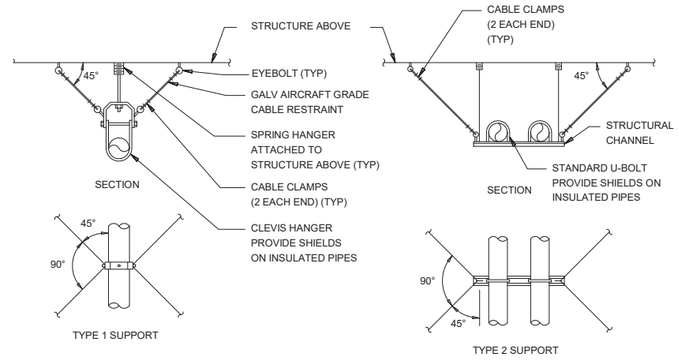

NOTES:

A. CABLE SIZE IS DETERMINED ASSUMING TOTAL LOAD ON ONE CABLE.

B. ANCHOR BOLTS ARE KWIK-BOLT CONCRETE INSERTS (OR EQUAL).

C. BOLT SIZE IS DETERMINED ASSUMING TOTAL LOAD ON ONE BOLT OR BOLT GROUP.

D. SIZES SHOWN ARE MINIMUM.

E. CABLE TO BE SLACK & ALOOW 1/4" MOVEMENT BEFORE BECOMING TAUT.

F. TRAPEZE CHANNELS REQUIRE WEB STIFFENERS 1/4" MINIMUM.

E7 SEISMIC PIPE SUPPORT DETAIL

SCALE: NTS

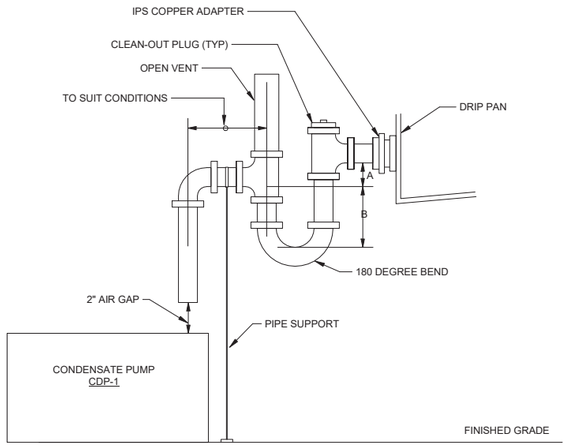

PIPE SUPPORT: SPLIT PIPE CLAMP, 3/8" THREADED ROD

UNIT TYPE	A	B
DRAW THRU	2" PLUS X	X
BLOW THRU	2" MINIMUM	2X

WHERE X = STATIC PRESSURE (AHU TOTAL STATIC PRESSURE) IN DRAIN PAN

A1 AHU CONDENSATE DRAIN DETAIL

SCALE: NTS

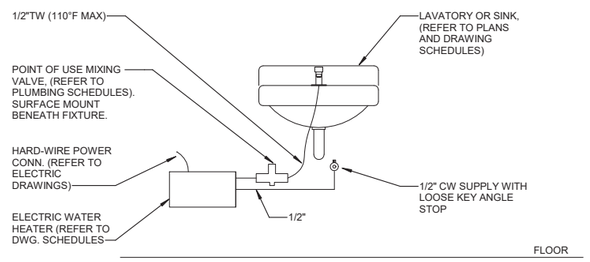

A5 ELECTRIC INSTANTANEOUS WATER HEATER DETAIL

SCALE: NTS

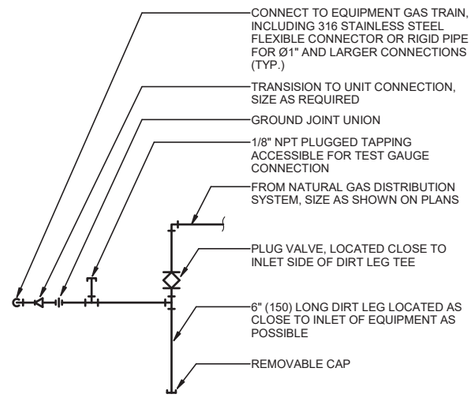

A8 GAS FIRED EQUIPMENT CONNECTION

SCALE: NTS

STATE OF OHIO
GREGORY HINTE
E-87905
4/28/26
REGISTERED
PROFESSIONAL ENGINEER

MARK	DESCRIPTION	DATE

DESIGNED BY: J. VEST
DRAWN BY: J. VEST
CHECKED BY: C. KORPASH
SUBMITTED BY: D. PEARSON
SIZE: ANSI D

ISSUE DATE: MAY 2026
ANG PROJECT NO.: PBXP222050
CONTRACT NO.: FA8803-21-D-0008
TASK ORDER NO.: W50S8R23F0009

OHIO AIR NATIONAL GUARD
MANSFIELD LAHM AIR NATIONAL GUARD BASE, OH

JACOBS GOVERNMENT SERVICES
2600 MICHELSON SR, STE 500
IRVINE, CA 92612

MANSFIELD LAHM AIR NATIONAL GUARD BASE, OH
REPAIR B403 FOR CYBER
FA877006
PLUMBING DETAILS

SHEET ID
P-502

PIPING MATERIAL SCHEDULE

SERVICE	LOCATION	PIPE	FITTINGS	DESCRIPTION / REMARKS
DOMESTIC WATER (HOT & COLD)	ABOVE FLOOR	TYPE L HARD DRAWN TEMPER SEAMLESS COPPER WATER TUBE PER ASTM B88	WROUGHT COPPER SOLDER-JOINT PRESSURE FITTINGS PER ASME B16.22 OR CAST COPPER ALLOY SOLDER-JOINT PRESSURE FITTINGS PER ASME B16.18	NO PRESS-CONNECT FITTINGS AND JOINTS; LEAD-FREE SOLDER JOINTS; INSULATE HOT & COLD WATER PIPING; ALL EXPOSED PIPING AT FIXTURES MUST BE CHROME PLATED.
DOMESTIC COLD WATER	UNDER GROUND	TYPE K SOFT DRAWN TEMPER SEAMLESS COPPER WATER TUBE PER ASTM B88	WROUGHT COPPER AND COPPER ALLOY BRAZE-JOINT PRESSURE FITTINGS PER ASME B16.50	NO PRESS-CONNECT FITTINGS AND JOINTS. LEAD-FREE BRAZED JOINTS; SOIL ANTI-CORROSION PIPE WRAP.
SANITARY WASTE/SEWER AND VENT	ABOVE FLOOR	NO-HUB CAST IRON SOIL PIPE PER CISPI 301 OR ASTM A-888	NO-HUB CAST IRON SOIL PIPE FITTINGS PER CISPI 301 WITH STAINLESS STEEL BANDS PER CISPI 310, SHIELDS AND RUBBER SLEEVE PER ASTM C 564	PIPE AND FITTINGS MUST BE MARKED WITH THE COLLECTIVE TRADEMARK OF CISPI AND BE LISTED BY NSF INTERNATIONAL.
SANITARY WASTE/SEWER AND VENT	UNDER GROUND	SCHEDULE 40 SOLID WALL ABS PIPE PER ASTM D2661	SCHEDULE 40 ABS-DWV SOCKET FITTINGS PER ASTM D2661 & ASTM D3311 WITH SOLVENT CEMENT JOINTS PER ASTM D2235	
STORM DRAIN (PRIMARY & OVERFLOW)	INTERIOR / EXTERIOR ABOVE FLOOR	NO-HUB CAST IRON SOIL PIPE PER CISPI 301 OR ASTM A-888	NO-HUB CAST IRON SOIL PIPE FITTINGS PER CISPI 301 WITH STAINLESS STEEL BANDS PER CISPI 310, SHIELDS AND RUBBER SLEEVE PER ASTM C 564	PIPE AND FITTINGS MUST BE MARKED WITH THE COLLECTIVE TRADEMARK OF CISPI AND BE LISTED BY NSF INTERNATIONAL.
CONDENSATE	ABOVE FLOOR	TYPE M HARD DRAWN TEMPER SEAMLESS COPPER WATER TUBE PER ASTM B88	WROUGHT COPPER SOLDER-JOINT DWV DRAINAGE FITTINGS PER ASME B16.29 OR CAST COPPER ALLOY SOLDER-JOINT DWV DRAINAGE FITTINGS PER ASME B16.23	NO PRESS-CONNECT FITTINGS AND JOINTS; INSULATE PIPING.
TRAP PRIMING	ABOVE / BELOW FLOOR	TYPE K SOFT ANNEALED TEMPER SEAMLESS COPPER WATER TUBE PER ASTM B88	NO JOINTS	SOIL ANTI-CORROSION PIPE WRAP ON BELOW FLOOR PIPING.
NATURAL GAS	ABOVE FLOOR	SCHEDULE 40 TYPE S GRADE B SEAMLESS BLACK STEEL PIPE PER ASTM A53	MALLEABLE IRON THREADED FITTINGS PER ASME B16.3 WITH THREADED JOINTS	THREADED FITTINGS AND JOINTS FOR 4" OR SMALLER SIZE. WELDED FITTINGS AND JOINTS FOR LARGER THAN 4" SIZE. NO PRESS-CONNECT FITTINGS AND JOINTS.

GENERAL MATERIAL NOTE:

1. SCHEDULE INTENDED TO BE SUMMARY, REFER TO SPECIFICATIONS SECTION 22 00 00, 3.12 TABLE 1 FOR FURTHER DETAILS. CONTRACTOR CHOICE IF MULTIPLE OPTIONS LISTED.

PLUMBING FIXTURE SCHEDULE

NOTE: ALL LISTED FIXTURES ARE PRESENTED TO ESTABLISH A STANDARD OF QUALITY AND PERFORMANCE. SUBSTITUTIONS ARE ALLOWED, PROVIDED THAT THEY ARE "APPROVED EQUIVALENT" FROM A DESIGN QUALITY AND PERFORMANCE STANDPOINT.

SYMBOL	FIXTURE	ROUGH-IN SIZE				ELECTRICAL DATA	DESCRIPTION / REMARKS
		W	V	CW	HW	HP, VOLT/PH/HZ, AMPERES	
COTG	CLEANOUT TO GRADE	-	-	-	-	-	CAST IRON GRADE CLEANOUT WITH THREADED, ADJUSTABLE HOUSING, FLANGED FERRULE, INTEGRAL CLAMPING COLLAR, BRONZE PLUG & ROUND TOP WITH SCORIATED SECURED COVER.
RPBP-1	REDUCED PRESSURE BACKFLOW PREVENTOR	-	-	-	-	-	2" REDUCED PRESSURE ZONE ASSEMBLY, LEAD FREE, QUARTER-TURN BALL VALVES, STRAINER, INTERNAL RELIEF VALVE, REPLACEABLE SEATS, AND AIR GAP.
EWC-1	ELECTRIC WATER COOLER	2"	1-1/2"	1/2"	-	120/1/60 5 AMPS	ELECTRIC CHILLED DRINKING FOUNTAIN WITH SENSOR BOTTLE FILLER, WALL MOUNTED PROVIDE ASME A112.6.1M CONCEALED WALL HANGERS WITH THRU-BOLTS AND BACK PLATES. PROVIDE WATER FILTRATION SYSTEM. MOUNTED AT ABA HEIGHT. ABA COMPLIANT.
FCO	FLOOR CLEANOUT	-	-	-	-	-	DURA-COATED CAST IRON BODY WITH BOTTOM OUTLET, GAS AND WATER, TIGHT THREADED BRONZE TAPERED LUG, NICKEL BRONZE TOP, AND VANDAL PROOF SCREWS.
FD-1	FLOOR DRAIN	2"	1-1/2"	1/2" TP	-	-	DUCO CAST IRON BODY WITH FLASHING COLLAR, ADJUSTABLE SQUARE STRAINER HEAD, CHROME PLATED STRAINER, NO-HUB OUTLET, SERVICE WEIGHT, 1/2-INCH TRAP PRIMER CONNECTION, AND QUAD CLOSE TRAP SEAL.
FS-1	FLOOR SINK	3" & 4"	1-1/2"	-	-	-	NO-HUB OUTLET CAST IRON FLANGED RECEPTOR WITH SEEPAGE HOLES, ACID RESISTANT COATED INTERIOR, NICKEL BRONZE RIM AND SECURED 1/2 STAINLESS STEEL GRATE, ALUMINUM FLAT BOTTOM STRAINER, FLASHING CLAMP, SERVICE WEIGHT, AND DEEP SEAL P-TRAP.
HB-1	HOSE BIBB	-	-	3/4"	-	-	HOSE BIBB WITH INTEGRAL VACUUM BREAKER, 3/4" MALE HOSE THREAD OUTLET, SECURED WHEEL HANDLE WITH VANDAL RESISTANT OPERATING STEM, ROUGH CHROME FINISH.
L-1	LAVATORY	2"	1-1/2"	1/2"	1/2"	BATTERY POWERED SENSOR OPERATED	ASME A112.19.2, WHITE VITREOUS CHINA LAVATORY, UNDER MOUNTED WITH TOP MOUNTED CENTERSET FAUCET. WATER FLOW RATE MUST NOT EXCEED 0.5 GPM. ASME A.112.6.1M CONCEALED WALL HANGER WITH ARMS. MOUNTED AT ABA HEIGHT. ABA COMPLIANT.
MS-1	TERRAZZO MOP SINK	2"	1-1/2"	3/4"	3/4"	-	PRECAST TERRAZZO MOP SINKS, STAINLESS STEEL CURB CAP, 28" CORNER ROUND, 12" DEPTH, SWIVEL FAUCET, 2GPM. PROVIDE 3" FLOOR WASTE OUTLET, COPPER ALLOY BODY DRAIN CAST INTEGRAL WITH TERRAZZO, WITH POLISHED STAINLESS-STEEL STRAINERS. PROVIDE WITH 8" CENTERSET FAUCET WITH ADJUSTABLE ARMS, SPOUT WITH INTEGRAL VACUUM BREAKER, CHECK STOPS, WRISTBLADE HANDLES, VANDAL RESISTANT, HOSE THREAD OUTLET AND 2.2 GPM MAXIMUM LAMINAR FLOW OUTLET
KS-1	KITCHEN SINK	2"	1-1/2"	1/2"	1/2"	1 HP, 120V, SINGLE PHASE 60 HZ, 6.3A GARBAGE DISPOSAL	SINGLE BOWL DUAL MOUNT ADA SINK,25"x22X6" OVERALL SINK DIMENSION, 304 STAINLESS STEEL, 18 GAUGE, CENTER DRAIN, THREE 1-1/2" DIAMETER FAUCET HOLES ON 4" CENTERS. PROVIDE WITH SINGLE-HANDLE HIGH ARC FAUCET, CHROME FINISH, 1.5 GPM MAXIMUM FLOW, 8" SWING GOOSENECK; 3-1/2" CHROME PLATED BRASS DRAIN WITH FLAT STRAINER AND TAILPIECE; P-TRAP CAST BRASS CHROME PLATED ASSEMBLY; AND CHROME FINISH SUPPLY AND STOP KIT. 1 HP GARBAGE DISPOSAL. MOUNTED AT ABA HEIGHT. ABA COMPLIANT.
TMV-1	THERMOSTATIC MIXING VALVE	-	-	1/2"	1/2" (IN) 1/2"(OUT)	-	LEAD-FREE, THERMOSTATIC MIXING VALVE TO BE INSTALLED AT THE POINT OF USE. SET OUTLET TEMPERATURE TO 110°F.
WC-1	FLUSH VALVE WATER CLOSET FLOOR MOUNTED	4"	2"	1"	-	BATTERY POWERED SENSOR OPERATED	ASME A112.19.2, WHITE VITREOUS CHINA, FLUSH VALVE, FLOOR MOUNTED WATER CLOSET WITH NON-FERROUS, 1.28 GPF. MUST NOT EXCEED 1.28 GPF WATER FLUSHING VOLUME. PROVIDE WHITE SOLID PLASTIC ELONGATED OPEN-FRONT SEAT, LARGE DIAMETER FLUSH VALVE, ANGLE STOP CONTROL VALVE AND VACUUM BREAKER. BARRIER FREE. MOUNTED AT ABA HEIGHT.
WC-2	FLUSH VALVE WATER CLOSET FLOOR MOUNTED	4"	2"	1"	-	BATTERY POWERED SENSOR OPERATED	ASME A112.19.2, WHITE VITREOUS CHINA, FLUSH VALVE, FLOOR MOUNTED WATER CLOSET WITH NON-FERROUS, 1.28 GPF. MUST NOT EXCEED 1.28 GPF WATER FLUSHING VOLUME. PROVIDE WHITE SOLID PLASTIC ELONGATED OPEN-FRONT SEAT, LARGE DIAMETER FLUSH VALVE, ANGLE STOP CONTROL VALVE AND VACUUM BREAKER.
UR-1	FLUSH VALVE URINAL	2"	1-1/2"	3/4"	-	BATTERY POWERED SENSOR OPERATED	ASME A112.19.2, WHITE VITREOUS CHINA, FLUSH VALVE, WALL MOUNTED, 3/4" TOP SPUD, WASHOUT URINAL. PROVIDE WITH SENSOR OPERATED BATTERY POWERED FLUSH VALVE, 0.125 GPF, AND MANUAL OVERRIDE FLUSH BUTTON. PROVIDE WITH URINAL CARRIER. MOUNTED AT ABA HEIGHT.
WHA-A	WATER HAMMER ARRESTER	-	-	1/2"	1/2"	-	WATER HAMMER ARRESTER (1 TO 11 FU), SOLDER, LEAD-FREE, MAINTENANCE-FREE PISTON TYPE, FACTORY AIR CHARGED TO 60 PSI, AND PERMANENTLY SEALED. PROVIDE 12"x12" WALL ACCESS PANEL.
WB-1	WATER OUTLET BOX - COLD	-	-	1/2"	-	-	NO LEAD VALVES, FIRE RATED WATER SUPPLY OUTLET BOX WITH COLD WATER SUPPLY.

TRAP PRIMER SCHEDULE

MARK	LOCATION	CW CONN. SIZE	NO. OF TRAPS SERVED	NOTES
TP-1	RESTROOMS	1/2"	1 EACH	1, 2, 5
TP-2	FIRE RISER / LABS	-	1 EACH FS-1	2, 3, 4, 5

GENERAL NOTES

1. FLUSH VALVE TRAP PRIMER.
2. 1/2" TYPE "K" COPPER PIPING OR PEX PIPING TO TRAP OR FLOOR DRAIN CONNECTION(S).
3. TRAP SEAL PROTECTION DEVICE TO COMPLY WITH ASSE 1072 STANDARD.
4. TRAP SEALS ARE ACCESSIBLE UNDER RAISED ACCESS FLOOR.
5. NO ELECTRICAL REQUIRED.

STATE OF OHIO
GREGORY HINTE
E-87905
4/28/26
REGISTERED
PROFESSIONAL ENGINEER

MARK	DESCRIPTION	DATE

DESIGNED BY: J. WEST
DRAWN BY: J. WEST
CHECKED BY: C. KORPASH
SUBMITTED BY: D. PEARSON
SIZE: ANSI D

ISSUE DATE: MAY 2026
ANG PROJECT NO.: PBXP22050
CONTRACT NO.: FA8903-21-D-0008
TASK ORDER NO.: W50S8R23F0009

OHIO AIR NATIONAL GUARD
MANSFIELD LAHM AIR NATIONAL GUARD BASE, OH

JACOBS GOVERNMENT SERVICES
2600 MICHELSON SR. STE 500
IRVINE, CA 92612

MANSFIELD LAHM AIR NATIONAL GUARD BASE, OH
REPAIR B403 FOR CYBER
FA877006
PLUMBING SCHEDULES

SHEET ID
P-601

INSTANTANEOUS WATER HEATER SCHEDULE

MARK	LOCATION	TYPE	ACTIVATION FLOWRATE (GPM)	FLOWRATE (GPM)	LEAVING WATER TEMPERATURE °F	TEMP RISE °F	COLD WATER CONNECTION SIZE	HOT WATER CONNECTION SIZE	INPUT (KW)	ELECTRICAL DATA				NOTES
										V	PH	HZ	FLA	
EWH-1	BREAK 1002	INSTANTANEOUS ELECTRIC	0.5	2	105	30	1/2"	1/2"	16.0	480	3	60	-	1,2
EWH-2	MENS 1014	INSTANTANEOUS ELECTRIC	0.5	2	105	30	1/2"	1/2"	16.0	480	3	60	-	1,2
EWH-3	FIRE RISER 1018	INSTANTANEOUS ELECTRIC	0.5	2	105	30	1/2"	1/2"	20.0	480	3	60	-	1,2

NOTES:

1. COMMERCIAL ELECTRIC INSTANTANEOUS ELECTRIC WATER HEATER WITH STAINLESS STEEL CONSTRUCTION WALL MOUNTED PANEL
2. PROVIDE WITH INTEGRAL DISCONNECT.

WATER METER SCHEDULE

MARK	LOCATION	SERVICE	METER TYPE	TYPICAL RANGE (GPM)	MAX CONTINUOUS FLOW (GPM)	PRESSURE LOSS AT MAX FLOW (PSI)	WATER INLET/OUTLET SIZE	METER SIZE	NOTES
WM-1	FIRE RISER 1018	COLD WATER	DISC	2.5 - 120	80	2.8	2"/2" - THREADED	2"	1,2,3,4

NOTES:

1. ALL METERS MUST COMPLY WITH NSF/ANSI 61 AND 372 STANDARDS.
2. PROVIDE REMOTE READOUT IN GALLONS FOR INTEGRATION INTO THE BAS.
3. PROVIDE WITH STRAINER UPSTREAM OF WATER METER.
4. INSTALL PER MANUFACTURER'S REQUIREMENTS WITH MINIMUM PIPE DIAMETERS UPSTREAM AND DOWNSTREAM OF WATER METER.

PRESSURE REGULATING VALVE SCHEDULE

MARK	LOCATION	PRESSURE REGULATOR SIZE	PRV PRESSURE SET POINT	NOTES
PRV-1	FIRE RISER 1018	2"	75 PSI	1

NOTES:

1. LEAD FREE.

CONDENSATE PUMP SCHEDULE

MARK	LOCATION/SERVICE	TYPE	FLOW [GPM] AT FEET OF HEAD	DISCHARGE [IN]	RPM	ELECTRICAL				REMARKS
						VOLTAGE	PH	HP	AMPS	
CDP-1	CONDENSATE FOR HVAC UNIT	FLOOR MOUNTED	1.6 GPM at 20 ft HEAD 2.5 GPM at 15 ft HEAD	3/4"	1750	120	1	1/18	2.4	1,2,3,4,5,6,7

REMARK NOTES:

1. 1/18 HP, FAN-COOLED, CONCENTRIC MOTOR
2. GALVANIZED STEEL TANK COVER
3. ABS TANK, VOLUTE, AND SWITCH COVER
4. 1-GALLON TANK CAPACITY
5. STAINLESS STEEL SHAFT
6. THERMALLY PROTECTED TO PROTECT OVERHEATING AND POTENTIAL MOTOR DAMAGE
7. 6' POWER CHORD

STATE OF OHIO
GREGORY HINTE
E-87905
4/28/26
REGISTERED
PROFESSIONAL ENGINEER

MARK	DESCRIPTION	DATE

DESIGNED BY: J. WEST
DRAWN BY: J. WEST
CHECKED BY: C. KORPASH
SUBMITTED BY: S. PEARSON
SIZE: ANSI D
ISSUE DATE: MAY 2026
ANG PROJECT NO.: PBXP222050
CONTRACT NO.: FA8903-21-D-0008
TASK ORDER NO.: W50SBR23F0009

OHIO AIR NATIONAL GUARD
MANSFIELD LAHM AIR NATIONAL GUARD BASE, OH

JACOBS GOVERNMENT SERVICES
2600 MICHELSON SR, STE 500
IRVINE, CA 92612

MANSFIELD LAHM AIR NATIONAL GUARD BASE, OH
REPAIR B403 FOR CYBER
FA877006
PLUMBING SCHEDULES

SHEET ID
P-602

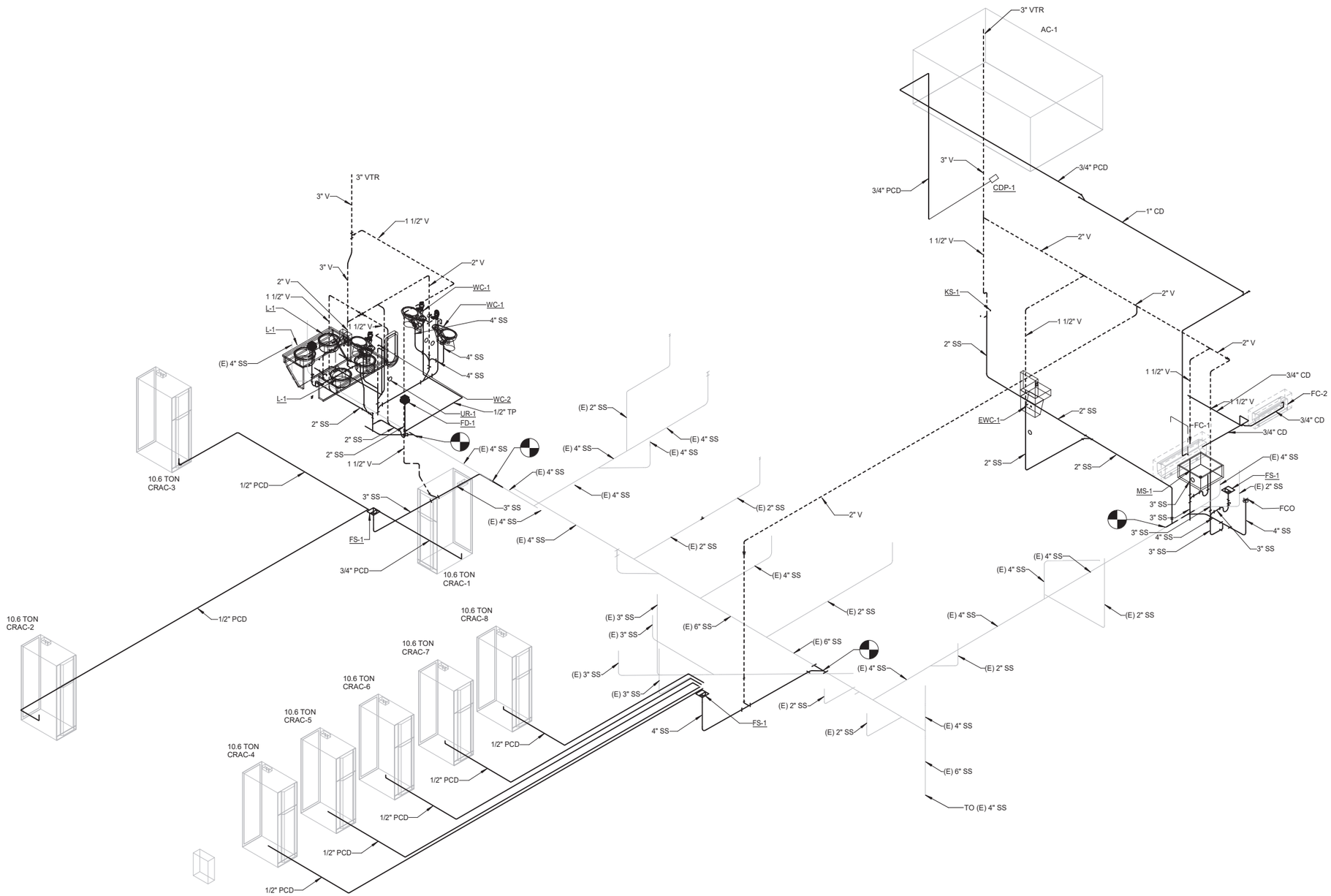

A1 ISOMETRIC - SANITARY SEWER

SCALE NTS

STATE OF OHIO
GREGORY HINTE
E-87905
4/28/26
REGISTERED
PROFESSIONAL ENGINEER

MARK	DESCRIPTION	DATE

ISSUE DATE: MAY 2026
ANG PROJECT NO.: PBXP222050
CONTRACT NO.: FA8803-21-D-0008
TASK ORDER NO.: W50S8R23F0009

DESIGNED BY: J. VEST
DRAWN BY: J. WEST
CHECKED BY: C. KORPASH
SUBMITTED BY: D. PEARSON
SIZE: ANSI D

OHIO AIR NATIONAL GUARD
MANSFIELD LAHM AIR NATIONAL GUARD BASE, OH

JACOBS GOVERNMENT SERVICES
2600 MICHELSON SR, STE 500
IRVINE, CA 92612

MANSFIELD LAHM AIR NATIONAL GUARD BASE, OH
REPAIR B403 FOR CYBER
FA877006
ISOMETRIC - SANITARY SEWER

SHEET ID

P-701

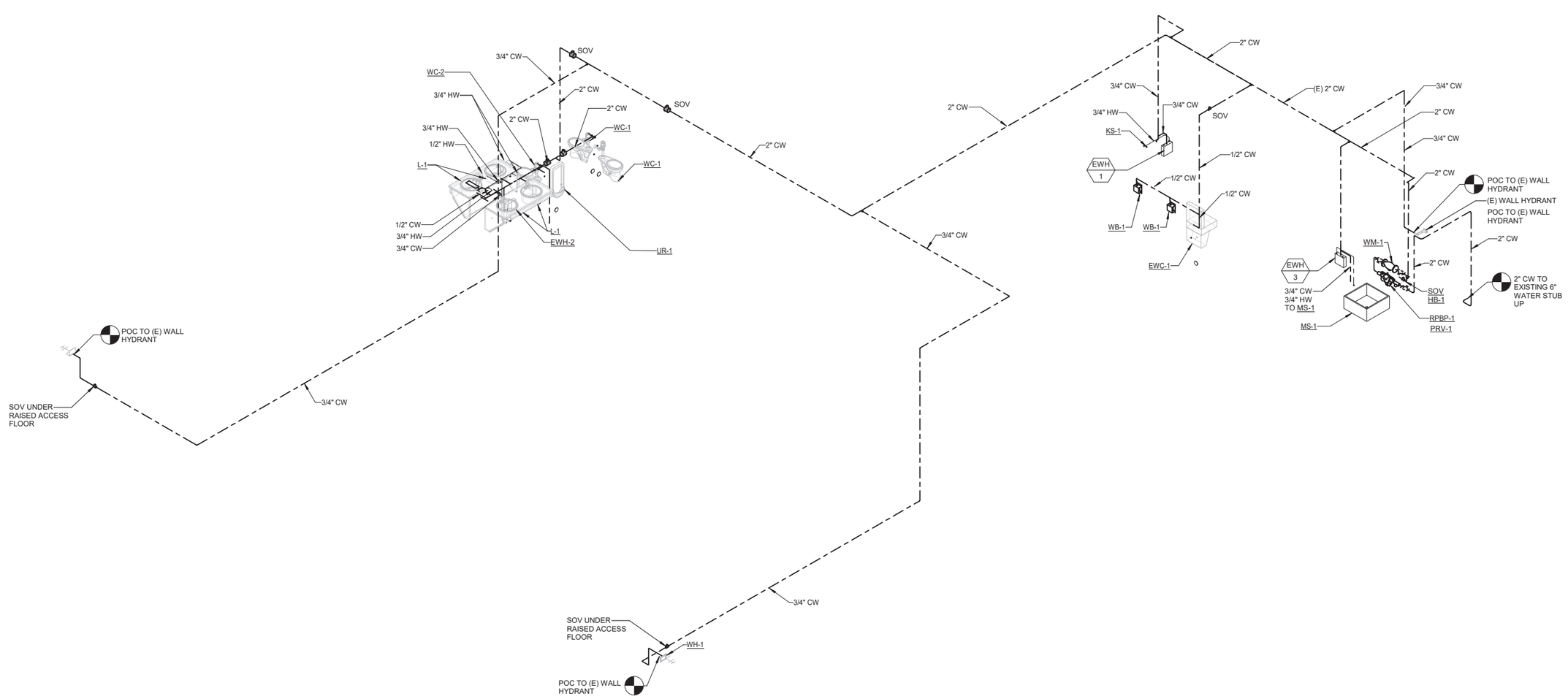

A1 ISOMETRIC - DOMESTIC WATER

SCALE NTS

STATE OF OHIO
GREGORY HINTE
E-87905
4/28/26
REGISTERED
PROFESSIONAL ENGINEER

MARK	DESCRIPTION	DATE

DESIGNED BY: J. WEST
DRAWN BY: J. WEST
CHECKED BY: C. KORPASH
SUBMITTED BY: D. PEARSON
SIZE: ANSI D
ISSUE DATE: MAY 2026
ANG PROJECT NO.: PBXP222050
CONTRACT NO.: FA8903-21-D-0008
TASK ORDER NO.: W50SBR23F0009

OHIO AIR NATIONAL GUARD
MANSFIELD LAHM AIR NATIONAL GUARD BASE, OH

JACOBS GOVERNMENT SERVICES
2600 MICHELSON SR, STE 500
IRVINE, CA 92612

MANSFIELD LAHM AIR NATIONAL GUARD BASE, OH
REPAIR B403 FOR CYBER
FA877006
ISOMETRIC - DOMESTIC WATER

SHEET ID
P-702

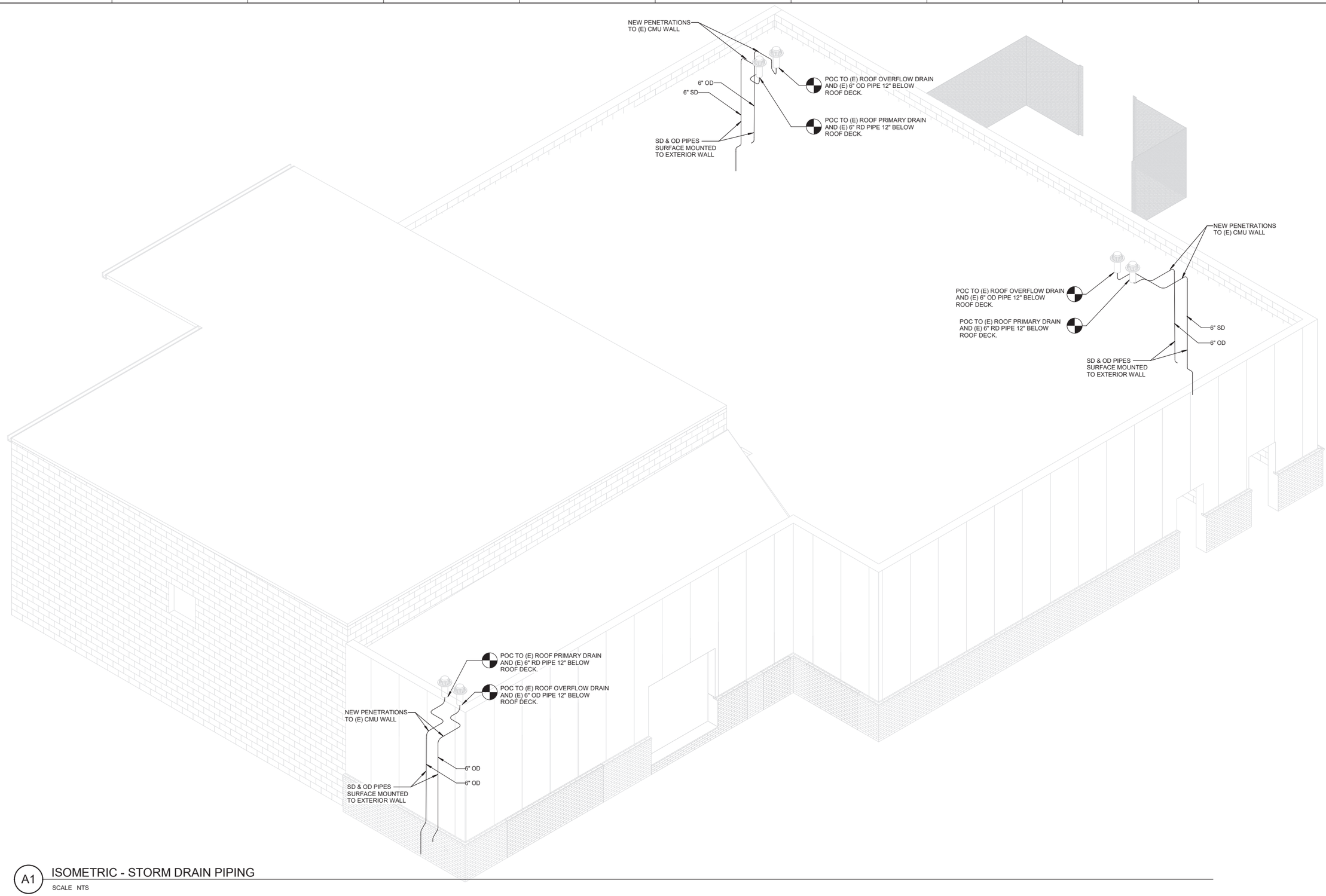

A1 ISOMETRIC - STORM DRAIN PIPING

SCALE NTS

STATE OF OHIO
GREGORY HINTE
E-87905
4/28/26
REGISTERED
PROFESSIONAL ENGINEER

MARK	DESCRIPTION	DATE

DESIGNED BY: J. WEST
DRAWN BY: J. WEST
CHECKED BY: C. KORPASH
SUBMITTED BY: PEARSON
SIZE: ANSI D
ISSUE DATE: MAY 2026
ANG PROJECT NO.: PBXP222050
CONTRACT NO.: FA8903-21-D-0008
TASK ORDER NO.: W50SBR23F0009

OHIO AIR NATIONAL GUARD
MANSFIELD LAHM AIR NATIONAL GUARD BASE, OH

JACOBS GOVERNMENT SERVICES
2600 MICHELSON SR, STE 500
IRVINE, CA 92812

MANSFIELD LAHM AIR NATIONAL GUARD BASE, OH
REPAIR B403 FOR CYBER
FA877006
ISOMETRIC - STORM DRAIN PIPING

SHEET ID
P-703

TYPE B-3 FINAL

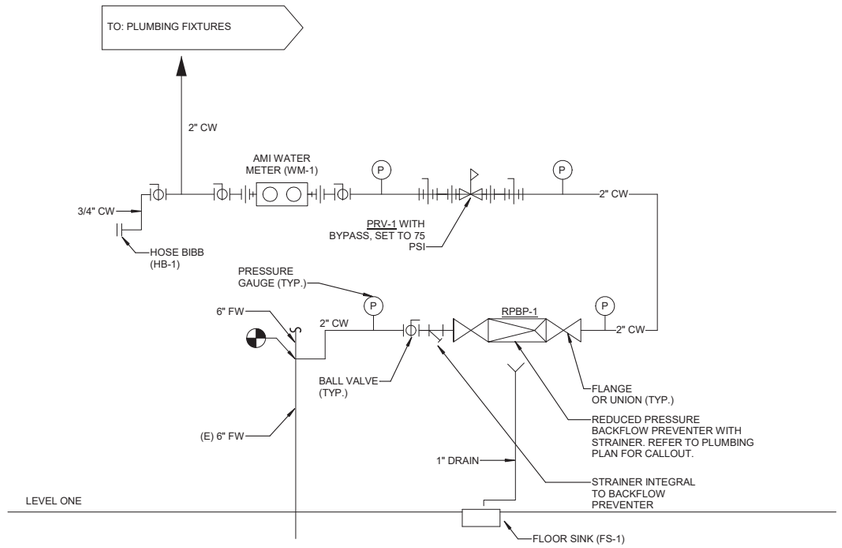

A1 PLUMBING DOMESTIC COLD WATER SYSTEM ONE-LINE DIAGRAM

SCALE: NTS

STATE OF OHIO
GREGORY HINTE
E-87905
4/28/26
REGISTERED
PROFESSIONAL ENGINEER

MARK	DESCRIPTION	DATE

DESIGNED BY: J. WEST
DRAWN BY: J. WEST
CHECKED BY: C. KORPASH
SUBMITTED BY: S. PEARSON
SIZE: ANSI D
ISSUE DATE: MAY 2026
ANG PROJECT NO.: PBXP222050
CONTRACT NO.: FA8903-21-D-0008
TASK ORDER NO.: W50S8R23F0009

OHIO AIR NATIONAL GUARD
MANSFIELD LAHM AIR NATIONAL GUARD BASE, OH

JACOBS GOVERNMENT SERVICES
2600 MICHELSON SR, STE 500
IRVINE, CA 92812

MANSFIELD LAHM AIR NATIONAL GUARD BASE, OH
REPAIR B403 FOR CYBER
FA877006
PLUMBING DOMESTIC COLD WATER SYSTEM
ONE-LINE DIAGRAM

SHEET ID

P-801

TYPE B-3 FINAL

ABBREVIATIONS

A	
AAV	AUTOMATIC AIR VENT
AC	ALTERNATING CURRENT
ACC	AIR COOLED CONDENSING UNIT
ADJ	ADJUSTABLE
AF	AMPERE FUSE
AFC	ABOVE FINISHED CEILING
AFF	ABOVE FINISHED FLOOR
AFG	ABOVE FINISHED GRADE
AHU	AIR HANDLING UNIT
AIC	AMPERE INTERRUPTING CURRENT
AL	ALUMINUM
AMPS	AMPERES
ANSI	AMERICAN NATIONAL STANDARDS INSTITUTE
APD	AIR PRESSURE DROP
AR	AIR RISER
ARCH	ARCHITECT, ARCHITECTURAL
ARI	AIR CONDITIONING AND REFRIGERATION INSTITUTE
ASHRAE	AMERICAN SOCIETY OF HEATING, REFRIGERATION AND AIR CONDITIONING ENGINEERS
ASME	AMERICAN SOCIETY OF MECHANICAL ENGINEERS
ASTM	AMERICAN SOCIETY OF TESTING AND MATERIALS
AV	AIR VENT
AWG	AMERICAN WIRE GAUGE
AWS	AMERICAN WELDING SOCIETY
AWWA	AMERICAN WATER WORKS ASSOCIATION
B	
B	BOILER
BD	BACKDRAFT DAMPER
B/D	BLOW-DOWN
BFW	BOILER FEED WATER
BKR	BREAKER
BLDG	BUILDING
BOD	BOTTOM OF DUCT
BOP	BOTTOM OF PIPE
BOS	BOTTOM OF STRUCTURE
BTU	BRITISH THERMAL UNIT
BR	BED ROOM
C	
C	CONDUIT
CATV	CABLE TELEVISION SYSTEM
CCTV	CLOSED CIRCUIT TELEVISION SYSTEM
CD	CONTROL DAMPER
CFH	CUBIC FEET PER HOUR
CFM	CUBIC FEET PER MINUTE
CFS	CUBIC FEET PER SECOND
CHWR	CHILLED WATER RETURN
CHWS	CHILLED WATER SUPPLY
CI	CAST IRON
CIRC	CIRCULATING
CKT	CIRCUIT
℄	CENTERLINE
CLG	CEILING
CMU	CONCRETE MASONRY UNIT
CO	CLEANOUT
COL	COLUMN
COND	CONDENSATE
CT	COOLING TOWER
CU	CONDENSING UNIT
CW	COLD WATER
°C	DEGREES CELSIUS
D	
D	DEPTH, SUPPLY AIR CEILING DIFFUSER
DB	DRY BULB
dB	DECIBEL
DC	DIRECT CURRENT
DH	DEHUMIDIFIER
DCW	DOMESTIC COLD WATER
DHW	DOMESTIC HOT WATER
DIA	DIAMETER
DIM	DIMENSION
DISC	DISCONNECT
DISCH	DISCHARGE
DN	DOWN
DPDT	DOUBLE-POLE, DOUBLE-THROW
DPST	DOUBLE-POLE, SINGLE-THROW
DS	DOWNSPOUT
DWG(S)	DRAWING(S)
DX	DIRECT EXPANSION
E	
E	EXHAUST AIR GRILLE
EA	EXHAUST AIR, EACH
EAT	ENTERING AIR TEMPERATURE
ECC	ECCENTRIC
EDB	ENTERING DRY BULB
EF	EXHAUST FAN
EFF	EFFICIENCY
EL	ELEVATION
ELEC	ELECTRICAL
EOL	END OF LINE
EQUIP	EQUIPMENT
ESP	EXTERNAL STATIC PRESSURE
EWB	ENTERING WET BULB
EWC	ELECTRICAL WATER COOLER
EWT	ENTERING WATER TEMPERATURE
EXH	EXHAUST
EXIST, (E)	EXISTING
EXT	EXTERNAL

F	
FA	FIRE ALARM
FACP	FIRE ALARM CONTROL PANEL
FC	FAN COIL
FCO	FLOOR CLEANOUT
FD	FIRE DAMPER
FPI	FINS PER INCH
FT	FOOT, FEET
° F	DEGREES FAHRENHEIT
G	
G,GND	GROUND
GA	GAUGE
GAL	GALLON
GALV	GALVANIZED
GC	GENERAL CONTRACTOR
GFI	GROUND FAULT INTERRUPTER
GFR	GROUND FAULT RELAY
GPD	GALLONS PER DAY
GPH	GALLONS PER HOUR
GPM	GALLONS PER MINUTE
GV	GRAVITY VENTILATOR
H	
H	HEIGHT
HD	HEAD, HUB DRAIN
HHWR	HEATING HOT WATER RETURN
HHWS	HEATING HOT WATER SUPPLY
HID	HIGH INTENSITY DISCHARGE
HOA	HAND-OFF-AUTOMATIC
HORIZ	HORIZONTAL
HP	HORSEPOWER, HEAT PUMP
HSTAT	HUMIDISTAT
HSTM	HIGH PRESSURE STEAM
HTG	HEATING
HTR	HEATER
HVAC	HEATING, VENTILATING AND AIR CONDITIONING
HW	HOT WATER
HYD	HYDRANT
HZ	HERTZ
I	
ID	INSIDE DIAMETER
IE	INVERT ELEVATION
IG	ISOLATED GROUND
IN	INCH
(IN WG)	INCHES WATER GAUGE
IN WC	INCHES OF WATER COLUMN
J	
J-BOX	JUNCTION BOX
K	
KV	KILOVOLT
KVA	KILOVOLT-AMPS
KW	KILOWATT
KWH	KILOWATT-HOUR
L	
L	LENGTH
LAT	LEAVING AIR TEMPERATURE
LB(S),#	POUND(S)
LDB	LEAVING DRY BULB
LDC	LEAK DETECTION CONTROLLER
LF	LINEAR FEET
LP	LOW PRESSURE
LRA	LOCKED ROTOR AMPS
LSTM	LOW PRESSURE STEAM (15 PSIG)
LTG	LIGHTING
LWB	LEAVING WET BULB
LWT	LEAVING WATER TEMPERATURE
M	
MAX	MAXIMUM
MBH	1000 BTU PER HOUR
MCA	MINIMUM CIRCUIT AMPACITY
MCB	MAIN CIRCUIT BREAKER
MCC	MOTOR CONTROL CENTER
MD	MOTORIZED DAMPER
MECH	MECHANICAL
MFR	MANUFACTURER
MG	MOTOR GENERATOR
MIN	MINIMUM
MTD	MOUNTED
M/U	MAKE-UP (WATER)

N	
N/A	NOT APPLICABLE
NC	NOISE CRITERIA, NORMALLY CLOSED
NEC	NATIONAL ELECTRICAL CODE
NEMA	NATIONAL ELECTRICAL MANUFACTURER'S ASSOCIATION
NFPA	NATIONAL FIRE PROTECTION ASSOCIATION
NIC	NOT IN CONTRACT
N.O.	NORMALLY OPEN
NTS	NOT TO SCALE
O	
OA	OUTSIDE AIR
OBD	OPPOSED BLADE DAMPER
OC	ON CENTER
OD	OUTSIDE DIAMETER
OF	OVERFLOW
OH	OVERHEAD
OPG	OPENING
OSA	OUTSIDE AIR
OS&Y	OUTSIDE STEM AND YOKE
OSHA	OCCUPATIONAL SAFETY AND ADMINISTRATION
P	
PIV	POST INDICATOR VALVE
PLBG	PLUMBING
PNL	PANEL
POC	POINT OF CONNECTION
POD	POINT OF DISCONNECTION
PRESS	PRESSURE
PSF	POUNDS PER SQUARE FOOT
PSI	POUNDS PER SQUARE INCH
PSIA	POUNDS PER SQUARE INCH ABSOLUTE
PSIG	POUNDS PER SQUARE INCH GAUGE
PSV	PRESSURE SAFETY VALVE, RELIEF VALVE
PV	PLUG VALVE
PVC	POLYVINYL CHLORIDE
Q	
QTY	QUANTITY
R	
R	RETURN AIR REGISTER
RAD	RADIANT
RA	RETURN AIR
RCP	REFLECTED CEILING PLAN, REINFORCED CONCRETE PIPE
RD	ROOF DRAIN
RE:	REFERENCE, REFER
RECIRC	RECIRCULATE
REINF	REINFORCING
REQD	REQUIRED
REV	REVISION, REVISE
RG	RIGID GALVANIZED STEEL
RH	RELATIVE HUMIDITY
RHG	REFRIGERANT HOT GAS
RL	REFRIGERANT LIQUID
RLA	RUNNING LOAD AMPS
RM	ROOM
RPM	REVOLUTIONS PER MINUTE
RS	REFRIGERANT SUCTION
RTU	ROOFTOP UNIT
S	
S	SUPPLY AIR SIDEWALL DIFFUSER
SA	SUPPLY AIR
SD	STORM DRAIN
SECT	SECTION
SF	SQUARE FEET
SFD	(COMBINATION) SMOKE-FIRE DAMPER
SHT	SHEET
SIM	SIMILAR
SHT MTL	SHEET METAL
(SL)	SOUND LINED
SMACNA	SHEET METAL AND AIR CONDITIONING CONTRACTOR'S NATIONAL ASSOCIATION
SP	STATIC PRESSURE
SPEC	SPECIFICATION
SQ	SQUARE
SS	STAINLESS STEEL, SANITARY SEWER, SERVICE SINK
ST	SOUND TRAP, STEAM TRAP
STD	STANDARD
STL	STEEL
STRUC	STRUCTURAL
SURF	SURFACE
SUSP	SUSPEND
SYM	SYMBOL

T	
TEMP	TEMPERATURE
TDH	TOTAL DYNAMIC HEAD
THRU	THROUGH
TP	TOTAL PRESSURE
TSP	TOTAL STATIC PRESSURE
TSTAT	THERMOSTAT
TYP	TYPICAL
U	
U/C	UNDER CUT
U/F	UNDER FLOOR
U/G	UNDERGROUND
U/S	UNDERSLAB
UL	UNDERWRITERS LABORATORIES, INC.
UON	UNLESS OTHERWISE NOTED
UPS	UNINTERRUPTIBLE POWER SUPPLY
UTR	UP THROUGH ROOF
V	
V	VOLT
VA	VOLT-AMPERE
VAC	VACUUM
VAV	VARIABLE AIR VOLUME
VCP	VITRIFIED CLAY PIPE
VD	VOLUME DAMPER
VEL	VELOCITY
VERT	VERTICAL
VFD	VARIABLE FREQUENCY DRIVE
VTR	VENT THROUGH ROOF
W	
W	WATT, WIDTH
W/	WITH
W/O	WITHOUT
WB	WET BULB
WPD	WATER PRESSURE DROP
WP	WEATHER PROOF
WT	WATERTIGHT, WEIGHT
X	
XFMR	TRANSFORMER

HVAC SYMBOLS

- SUPPLY AIR DIFFUSER - ARROWS INDICATE PATTERN. NO PATTERN SHOWN EQUALS 4-WAY.
- RETURN AIR GRILLE
- EXHAUST GRILLE
- LINEAR DIFFUSER
- 12"ø — ROUND DUCTWORK.DIAMETER INDICATED IN
- 20"/12" — INCHES OVAL DUCTWORK. SIZE INDICATED IN INCHES, FIRST NUMBER IS SIDE SHOWN.
- 20"x12" — RECTANGULAR DUCTWORK. SIZE INDICATED IN INCHES, FIRST NUMBER IS SIDE SHOWN.
- SUPPLY OR OUTSIDE AIR DUCT
- RETURN AIR DUCT
- RELIEF OR EXHAUST AIR DUCT
- ROUND DUCT BRANCH TAKE-OFF FROM RECTANGULAR MAIN WITH CONICAL TAP.
- DUCTWORK SIZE TRANSITION
- SUPPLY OR OUTSIDE AIR DUCT UP
- SUPPLY OR OUTSIDE AIR DUCT DOWN
- RETURN AIR DUCT UP
- RETURN AIR DUCT DOWN
- RELIEF OR EXHAUST AIR DUCT UP
- RELIEF OR EXHAUST AIR DUCT DOWN
- IN-LINE 90 DEGREE DROP (RISE) IN DUCT
- UP — INCLINED RISE IN DUCT
- DN — INCLINED DROP IN DUCT
- TURNING VANES
- NEW DUCTWORK
- EXISTING DUCTWORK
- FLEXIBLE DUCT (SINGLE PIECE, 5 FEET MAX.)
- COMBINATION SMOKE/FIRE DAMPER
- SMOKE DAMPER
- MANUAL VOLUME DAMPER
- M — MOTORIZED DAMPER
- POINT OF DISCONNECTION
- POINT OF CONNECTION
- VAV ZONE TERMINAL
- HHW (AS APPLICABLE)
- DP — DIFFERENTIAL PRESSURE SENSOR
- IL — GREEN INDICATOR LIGHT
- S — TEMPERATURE SENSOR
- T — ROOM THERMOSTAT (MOUNT 46" AFF)
- SH — EMERGENCY AIR DISTRIBUTION SHUTOFF
- SD — DUCT SMOKE DETECTOR

PIPING SYMBOLS

- ELBOW UP
- ELBOW DOWN
- VALVE IN DROP
- VALVE IN DROP
- VALVE IN RISE
- DIRECTION OF FLOW
- DIRECTION OF SLOPE DOWN
- CONCENTRIC REDUCER
- ECCENTRIC REDUCER
- TEE OUTLET UP
- TEE OUTLET DOWN
- UNION
- PIPE ANCHOR
- EXPANSION JOINT
- STRAINER WITH BLOWDOWN VALVE
- GATE VALVE
- BUTTERFLY VALVE
- BALL VALVE
- CHECK VALVE
- DOUBLE BACK CHECK VALVE
- PRESSURE REDUCING VALVE
- SHUT OFF VALVE
- CAP
- BALANCING VALVE WITH DIFFERENTIAL PRESSURE TAPS
- MANUAL AIR VENT
- AUTOMATIC AIR VENT
- T&P RELIEF VALVE
- VACUUM BREAKER
- PRESSURE GAUGE WITH BALL VALVE
- THERMOMETER
- FLEXIBLE CONNECTION
- PIPE FLANGE
- THERMOMETER WELL
- PETE'S PLUG
- TWO-WAY CONTROL VALVE
- THREE-WAY CONTROL VALVE
- CALIBRATED BALANCING VALVE
- ISOLATION VALVE
- PIPE REDUCER
- UNDERGROUND PIPE

NOTE: HATCH PATTERN ON THE DRAWING DENOTES MECHANICAL DEMOLITION WITHIN THE BOUNDARY.

DRAWING / DETAIL REFERENCE KEY

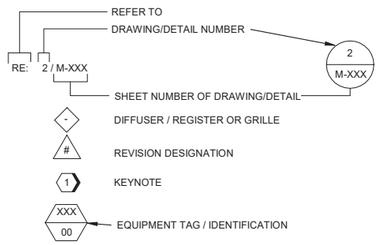

HVAC DESIGN CRITERIA

OUTSIDE DESIGN CRITERIA

LOCATION: MANSFIELD LAHM AIR NATIONAL GUARD BASE (DATA USED FROM MANSFIELD LAHM REGIONAL AIRPORT)
ELEVATION: 1296 FT

LATITUDE: 40.82°N
LONGITUDE: 82.52°W

WINTER (99.0%): 4°F
SUMMER (1.0%): 86°F DB / 72°F WB

INDOOR DESIGN CRITERIA

ADMINISTRATIVE SPACES (OFFICES, CONFERENCE ROOMS, BREAK ROOM, WORK STATIONS, ETC.):
- COOLING: 72°F DB, 50% RH (NOT ACTIVELY CONTROLLED)
- HEATING: 68°F DB

ELECTRICAL AND FIRE RISER ROOM
- COOLING: 85°F DB
- HEATING: 55°F DB

DATA ROOMS
- COOLING: 72°F DB, 30-55% RH
- HEATING: 68°F DB

STATE OF OHIO — GREGORY HINTE — E-87905 — 4/28/26 — REGISTERED PROFESSIONAL ENGINEER

MARK	DESCRIPTION	DATE

ISSUE DATE: MAY 2026
ANG PROJECT NO.: PBXP22050
CONTRACT NO.: FA8803-21-D-0008
TASK ORDER NO.: W56HRZ-3F0009

DESIGNED BY: C. KORPASH
DRAWN BY: E. LEW
CHECKED BY: J. TEETER
SUBMITTED BY: D. CARLSON
SIZE: ANSI D

OHIO AIR NATIONAL GUARD
MANSFIELD LAHM AIR NATIONAL GUARD BASE, OH

JACOBS GOVERNMENT SERVICES
2600 MICHELSON SR., STE 500
IRVINE, CA 92612

MANSFIELD LAHM AIR NATIONAL GUARD BASE, OH
REPAIR B403 FOR CYBER
FA877006
MECHANICAL LEGEND, ABBREVIATIONS, AND NOTES

SHEET ID
M-001

TYPE B-3 FINAL

DUCTWORK CONSTRUCTION AND LEAKAGE TEST TABLE

SYSTEM	DUCT PRESSURE CLASS (IN. W.G)				SUPPLY ROUND/ OVAL RECTANGULAR				RETURN/ OUTSIDE AIR		DUCT TEST PRESSURE (IN. W.G)	NOTES
	SUPPLY DUCT	RETURN DUCT	EXHAUST DUCT	OUTSIDE AIR DUCT	DUCT SEAL CLASS	DUCT LEAK CLASS	DUCT SEAL CLASS	DUCT LEAK CLASS	DUCT SEAL CLASS	DUCT LEAK CLASS		
PACKAGED AC UNIT	2	-	-	-	A	6	A	12	-	-	2.0	1
	-	-1	-	-	-	-	-	-	A	24	1.0	1
VAV TERMINAL BOXES	2	-	-	-	A	6	A	12	-	-	2.0	1
EXHAUST DUCT	-	-	-1	-	-	-	A	24	-	-	1.0	1

NOTE:
1. TEST IN ACCORDANCE WITH UFGS 23.05.93. TESTING , ADJUSTING AND BALANCING FOR HVAC AND THE PROCEDURES IN SMACNA HVAC AIR DUCT LEAKAGE TEST MANUAL.

GENERAL NOTES

A. PROVIDE MATERIALS AND EQUIPMENT AND PERFORM LABOR TO INSTALL COMPLETE AND OPERATIONAL MECHANICAL SYSTEMS AS INDICATED ON THE DRAWINGS, AS SPECIFIED, AND AS REQUIRED PER APPLICABLE UFC'S AND THE 2024 INTERNATIONAL BUILDING CODES (IBC, IMC, IPC, ETC.)

B. DRAWINGS FOR MECHANICAL WORK ARE DIAGRAMMATIC AND ARE INTENDED TO CONVEY SCOPE AND GENERAL ARRANGEMENT ONLY.

C. INSTALL MECHANICAL EQUIPMENT AND APPURTENANCES IN ACCORDANCE WITH MANUFACTURERS' RECOMMENDATIONS, CONTRACT DOCUMENTS, AND APPLICABLE CODES AND REGULATIONS.

D. PROVIDE VIBRATION ISOLATION FOR MECHANICAL EQUIPMENT TO PREVENT TRANSMISSION OF VIBRATION TO BUILDING STRUCTURE AND A VIBRATION-FREE INSTALLATION.

E. COORDINATE CONSTRUCTION OF MECHANICAL WORK WITH ARCHITECTURAL, STRUCTURAL, PLUMBING, CIVIL, ELECTRICAL WORK, ETC., SHOWN ON OTHER CONTRACT DOCUMENT DRAWINGS.

F. AIR FLOW AND PRESSURE TESTS MUST BE COMPLETED BEFORE ANY DUCTWORK INSULATION IS APPLIED.

G. LOCATE TEMPERATURE, PRESSURE AND FLOW MEASURING DEVICES IN ACCESSIBLE LOCATIONS WITH STRAIGHT SECTION OF PIPE OR DUCT UP AND DOWNSTREAM AS RECOMMENDED BY THE MANUFACTURER TO PROVIDE ACCURATE READINGS.

H. TESTING, ADJUSTING AND BALANCING AGENCY SHALL BE A MEMBER OF THE ASSOCIATED AIR BALANCE COUNCIL (AABC) OR THE NATIONAL ENVIRONMENTAL BALANCING BUREAU (NEBB). TESTING, ADJUSTING AND BALANCING SHALL BE PREFORMED IN ACCORDANCE WITH THE AABC STANDARDS OR NEBB AS APPLICABLE.

I. COORDINATE EQUIPMENT CONNECTIONS WITH MANUFACTURERS' CERTIFIED DRAWINGS. COORDINATE AND PROVIDE DUCT TRANSITIONS REQUIRED FOR FINAL EQUIPMENT CONNECTIONS TO FURNISHED EQUIPMENT. FIELD VERIFY AND COORDINATE DUCT DIMENSIONS BEFORE FABRICATION.

J. MISCELLANEOUS STEEL REQUIRED TO ENSURE PROPER INSTALLATION AND AS SHOWN IN DETAILS FOR DUCTWORK AND EQUIPMENT (UNLESS OTHERWISE NOTED) MUST BE FURNISHED AND INSTALLED BY THE MECHANICAL CONTRACTOR. OTHER TRADES MUST NOT SHARE SUPPORT.

K. DUCTWORK AND EQUIPMENT SUPPORTED FROM STRUCTURAL STEEL MUST BE COORDINATED WITH GENERAL CONTRACTOR. ATTACHMENTS TO STEEL BAR JOISTS, TRUSSES OR JOINT GIRDERS MUST BE AT PANEL POINTS. PROVIDE BEAM CLAMPS MEETING MSS STANDARDS. WELDING TO STRUCTURAL MEMBERS MUST NOT BE PERMITTED. THE USE OF C-CLAMPS MUST NOT BE PERMITTED. REFER TO STRUCTURAL DRAWINGS.

L. OPENINGS IN FIRE AND SMOKE BARRIERS DUE TO DUCTWORK, PIPING, CONDUIT, ETC., MUST BE SEALED USING UL APPROVED MATERIALS SUCH AS 3M AND INSTALLED ACCORDING TO UL APPROVED CONFIGURATIONS.

M. SUPPORTS, SEISMIC RESTRAINTS, BRACING AND ANCHORING OF DUCTWORK, PIPING AND EQUIPMENT IS REQUIRED IN ACCORDANCE WITH THE REQUIREMENTS OF ALL APPLICABLE CODES AND STANDARDS. (DELEGATED DESIGN BY A REGISTERED PE IN THE STATE)

N. THE LOCATIONS OF ITEMS SHOWN ON THE DRAWINGS OR CALLED FOR IN THE SPECIFICATIONS THAT ARE NOT FIXED BY DIMENSIONS ARE APPROXIMATE ONLY. THE EXACT LOCATIONS NECESSARY TO SECURE THE BEST CONDITIONS AND RESULTS MUST BE DETERMINED BY THE PROJECT SITE CONDITIONS AND MUST HAVE THE APPROVAL OF THE CONTRACTING OFFICER OF RECORD BEFORE BEING INSTALLED. DO NOT SCALE DRAWINGS.

O. REFER TO SPECIFICATIONS FOR MATERIALS AND METHODS FOR CONSTRUCTION. WHERE THE WORD "PROVIDE" OR "NEW" IS USED SHALL BE UNDERSTOOD TO MEAN "THE CONTRACTOR MUST FURNISH AND INSTALL". EQUIPMENT AND MATERIALS PROVIDED SHALL BE NEW AND FREE FROM DEFECTS. NO SALVAGE OR REFURBISHED OR USED EQUIPMENT OR MATERIAL WILL BE ACCEPTABLE.

P. LOCATIONS AND SIZES OF WALL AND ROOF OPENINGS MUST BE COORDINATED WITH OTHER TRADES INVOLVED.

Q. AIR CONDITIONING CONDENSATE DRAIN LINES FROM EACH HVAC UNIT SHALL BE PIPED FULL SIZE FROM THE UNIT DRAIN OUTLET, WITH "P" TRAP AND PIPED TO THE NEAREST DRAIN. PROVIDE PIPE INSULATION PER ASHRAE 90.1-2019. REFER TO PLUMBING DRAWINGS.

R. MECHANICAL CONTRACTOR MUST PROVIDE AND INSTALL LOW VOLTAGE (50V OR LESS) WIRING AND CONDUIT NEEDED FOR MECHANICAL SYSTEM OPERATION. THIS MUST INCLUDE WIRING FOR ANY SENSOR, THERMOSTAT, VALVE, DAMPER, SPLIT SYSTEM (REMOTE AIR-COOLED CONDENSER), ETC. CONTROL WIRING SHALL COMPLY WITH THE LATEST NATIONAL ELECTRIC CODE.

S. MECHANICAL CONTRACTOR MUST SUBMIT DETAILED DUCTWORK SHOP DRAWINGS TO CONTRACTING OFFICER FOR REVIEW. SHOP DRAWINGS MUST BE COMPLETE WITH TOP AND BOTTOM DIMENSIONS, INCLUDING SUPPORTS, SEISMIC ATTACHMENT DETAILS AND LOCATIONS. SHOP DRAWINGS MUST BE APPROVED BEFORE ANY MATERIALS ARE ORDERED OR CONSTRUCTION STARTED.

T. ACCURATE "AS-BUILT" DRAWINGS MUST BE MAINTAINED DURING CONSTRUCTION AND SUBMITTED FOR APPROVAL UPON COMPLETION OF INSTALLATION. INDICATE DUCT AND EQUIPMENT SIZES AND LOCATIONS.

U. SHEET METAL DUCTWORK MUST BE FABRICATED AND INSTALLED IN ACCORDANCE WITH THE LATEST SMACNA DESIGN AND CONSTRUCTION STANDARDS.

V. MECHANICAL CONTRACTOR MUST PERFORM WORK IN A COMPLETE AND WORKMANLIKE MANNER IN CONFORMANCE WITH CODES AND MANUFACTURER'S RECOMMENDATIONS. CONTRACTOR MUST COORDINATE WITH ARCHITECTS, ELECTRICAL AND STRUCTURAL WORK TO BE PERFORMED TO PROVIDE A COMPLETE AND WORKING SYSTEM.

W. TRAVERSE JOINTS FOR SUPPLY DUCTS MUST BE SEALED WITH APPROVED MASTIC.

X. EQUIPMENT DESIGNED TO BE FIXED POSITION MUST BE SECURELY FASTENED IN PLACE.

Y. PROVIDE ACCESS PANELS FOR INSTALLATION IN WALLS AND CEILINGS, WHERE REQUIRED, TO SERVICE DAMPERS, VALVES, SMOKE DETECTORS AND OTHER CONCEALED MECHANICAL EQUIPMENT. CONTRACTOR MUST COORDINATE LOCATION.

Z. USE ROUND OR OVAL PREFABRICATED DUCT TO REDUCE BOTH LEAKAGE AND FRICTION LOSSES ON PRIMARY DUCT SYSTEMS.

AA. PROVIDE CAP OR TEMPORARY PROTECTION FOR OPENINGS CREATED DURING CONSTRUCTION TO PREVENT WATER INFILTRATION AND CREATURES FROM ENTERING BUILDING.

SEISMIC NOTES

SEISMIC RESTRAINT SYSTEMS FOR PIPING, DUCTWORK AND EQUIPMENT IS A DELEGATED DESIGN. PER SECTION 23 05 48 19. IT IS THE CONTRACTOR'S RESPONSIBILITY TO DESIGN A SYSTEM THAT IS IN FULL COMPLIANCE WITH THE LISTED CRITERIA .

STATE OF OHIO
GREGORY HINTE
E-87905
4/28/26
REGISTERED
PROFESSIONAL ENGINEER

MARK	DESCRIPTION	DATE

DESIGNED BY: C. KORPASH
DRAWN BY: E. LEW
CHECKED BY: J. TEETER
SUBMITTED BY: PEARSON
SIZE: ANSI D
ISSUE DATE: MAY 2026
ANG PROJECT NO.: PBXP222050
CONTRACT NO.: FA8903-21-D-0008
TASK ORDER NO.: W56HRZ-3F0009

OHIO AIR NATIONAL GUARD
MANSFIELD LAHM AIR NATIONAL GUARD BASE, OH

JACOBS GOVERNMENT SERVICES
2600 MICHELSON SR. STE 500
IRVINE, CA 92612

MANSFIELD LAHM AIR NATIONAL GUARD BASE, OH
REPAIR B403 FOR CYBER
FA877006
MECHANICAL GENERAL NOTES

SHEET ID
M-002

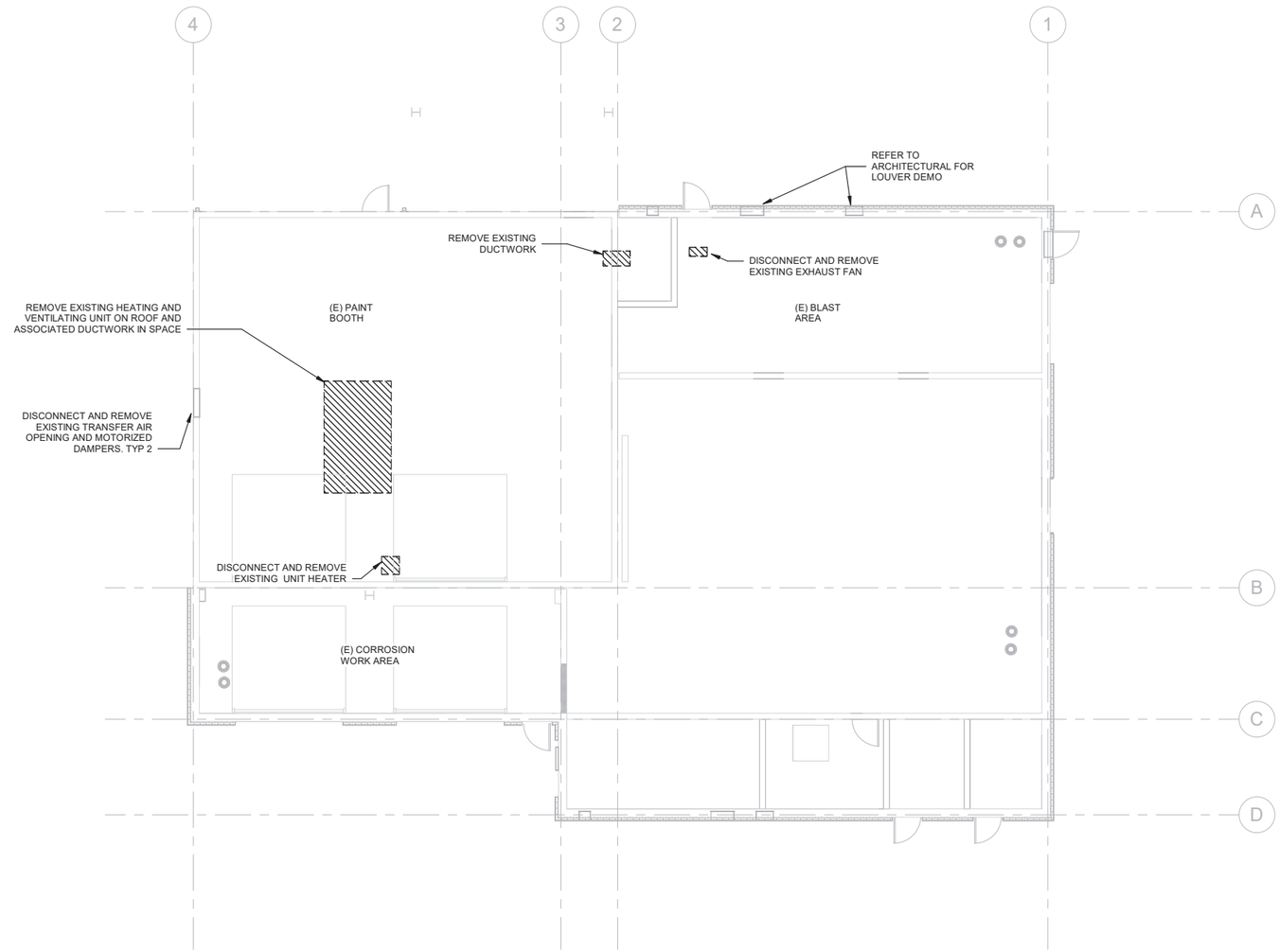

B2 GROUND FLOOR DEMOLITION PLAN
SCALE 1/8" = 1'-0"

GENERAL SHEET NOTES

A. REFER TO ARCH DWGS FOR REMOVAL OF LOUVERS.

B. REFER TO ARCH DWGS FOR PATCHING OF ROOF AND WALL OPENINGS.

GRAPHIC SCALE(S)

8 6 4 2 0 8 16
SCALE: 1/8"=1'-0"

PLAN NORTH

STATE OF OHIO
GREGORY HINTE
E-87905
4/28/26
REGISTERED
PROFESSIONAL ENGINEER

MARK	DESCRIPTION	DATE

DESIGNED BY: C. KORPASH
DRAWN BY: E. LEW
CHECKED BY: J. TEETER
SUBMITTED BY: PEARSON
SIZE: ANSI D
ISSUE DATE: MAY 2026
ANG PROJECT NO.: PBXP222050
CONTRACT NO.: FA8803-21-D-0008
TASK ORDER NO.: W56SRZJP0009

OHIO AIR NATIONAL GUARD
MANSFIELD LAHM AIR NATIONAL GUARD BASE, OH

JACOBS GOVERNMENT SERVICES
2600 MICHELSON SR., STE 500
IRVINE, CA 92612

MANSFIELD LAHM AIR NATIONAL GUARD BASE, OH
REPAIR B403 FOR CYBER
FA877006
MECHANICAL DEMOLITION FLOOR PLAN

SHEET ID
M-101

TYPE B-3 FINAL

AC-1 AIRFLOW DISTRIBUTION TABLE

ROOM	ROOM NAME	SUPPLY (CFM)	RETURN (CFM)	EXHAUST (CFM)	NET (CFM)
1001	OPEN OFFICE	1840	1740	0	100
1002	BREAK	255	225	0	30
1003	OFFICE	260	230	0	30
1004	OFFICE	260	230	0	30
1005	OFFICE	260	230	0	30
1006	TEF	40	0	0	40
1007	LAB A	1115	1065	0	50
1008	LAB B	1070	1020	0	50
1009	LAB C	1275	1225	0	50
1011	CIRCULATION	215	0	0	215
1012	WOMENS	0	0	50	-50
1013	MENS	0	0	50	-50
1014	CONFERENCE	375	325	0	50
1015	CONFERENCE	375	325	0	50
1016	SECURITY	125	100	0	25
TOTAL		7465	6715	100	650

NOTE:
1. NET SUPPLY AIR IN CIRCULATION SPACE IS 30CFM. RESTROOMS SUPPLIED 50 CFM EACH OF TRANSFER AIR FROM CIRCULATION.

BRANCH DUCT SIZING

NOMINAL SIZE (IN)	MAX FLOW (CFM)
8	270
10	400
12	680
14	1000
16	1400

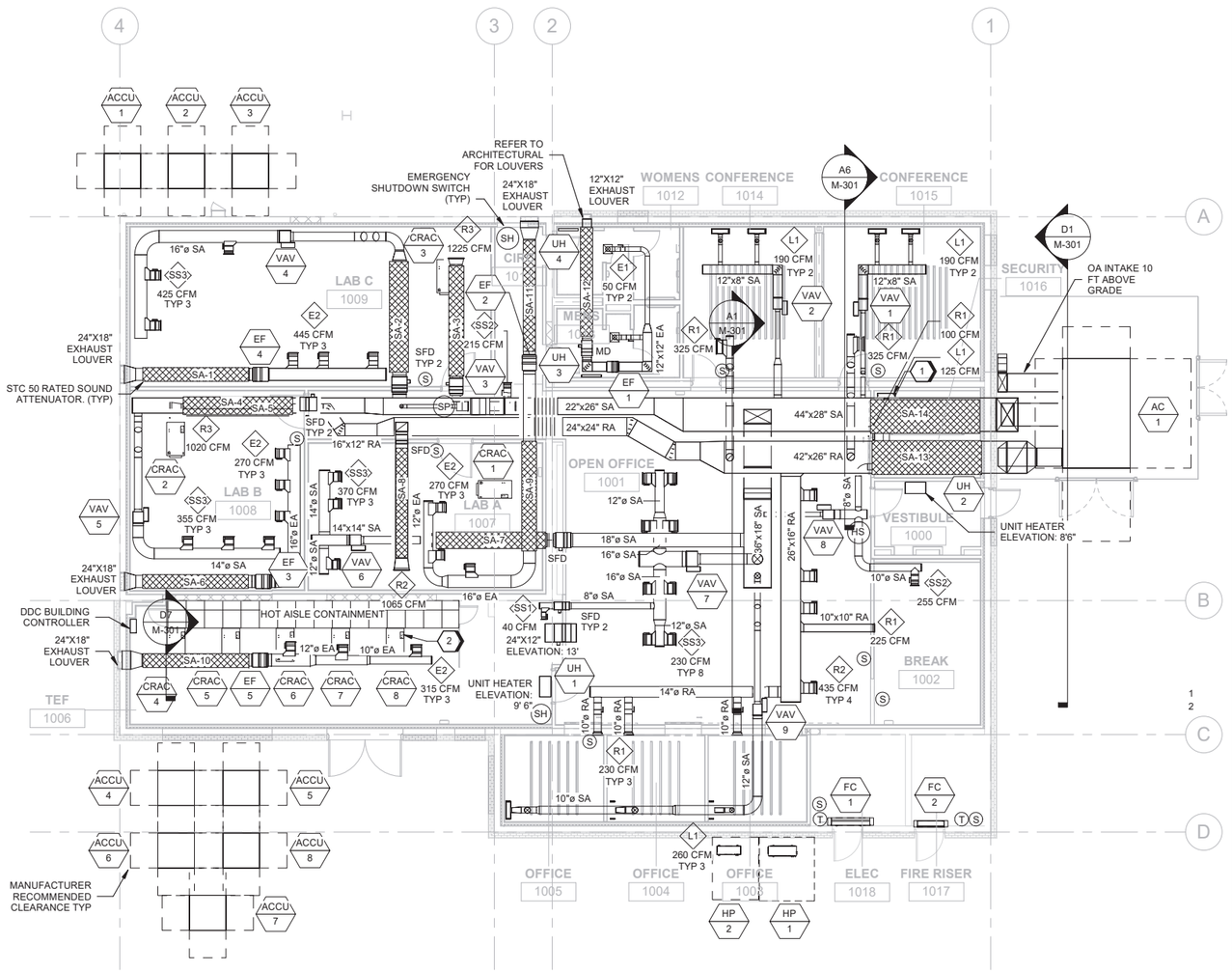

B3 GROUND FLOOR PLAN MECHANICAL
SCALE 1/8" = 1'-0"

GENERAL SHEET NOTES

A. REFER TO CIVIL DRAWINGS FOR EQUIPMENT PAD DETAILS.

B. OUTDOOR EQUIPMENT TO BE PLACED ON 36" HIGH STEEL PLATFORMS.

C. PROVIDE FLEXIBLE CONNECTION FOR DUCTWORK OR PIPING ACROSS BUILDING SEISMIC JOINTS.

D. REFER TO SOUND ATTENUATOR DETAIL A1, SHEET M503.

E. INSTALL ALL DUCTWORK IN EXPOSED AREAS WITH CLEAN, FINISHED APPEARANCE FOR AESTHETICS.

F. REFER TO BRANCH DUCT SIZING TABLE FOR MAIN AND BRANCH DUCT SIZES NOT SHOWN ON PLANS.

SHEET KEYNOTES

1. REFER TO M-301 FOR DUCTWORK IN SECURITY ROOM.
2. PROVIDE DX PIPING FROM CRAC UNIT TO OUTDOOR CONDENSING UNIT. ROUTE DX PIPING BELOW FLOOR AND PENETRATE EXTERIOR WALL.

GRAPHIC SCALE(S)

8 6 4 2 0 8 16
SCALE: 1/8"=1'-0"

PLAN NORTH

STATE OF OHIO
GREGORY HINTE
E-87905
4/28/26
REGISTERED PROFESSIONAL ENGINEER

MARK	DESCRIPTION	DATE

DESIGNED BY: C. KORPASH
DRAWN BY: E. LEW
CHECKED BY: J. TEETER
SUBMITTED BY: P. PEARSON
SIZE: ANSI D
ISSUE DATE: MAY 2026
ANG PROJECT NO.: PBXP222050
CONTRACT NO.: FA8903-21-D-0008
TASK ORDER NO.: W56SRK3P0009

OHIO AIR NATIONAL GUARD
MANSFIELD LAHM AIR NATIONAL GUARD BASE, OH

JACOBS GOVERNMENT SERVICES
2600 MICHELSON SR, STE 500
IRVINE, CA 92612

MANSFIELD LAHM AIR NATIONAL GUARD BASE, OH
REPAIR B403 FOR CYBER
FA877006
MECHANICAL FLOOR PLAN

SHEET ID
M-102

TYPE B-3 FINAL

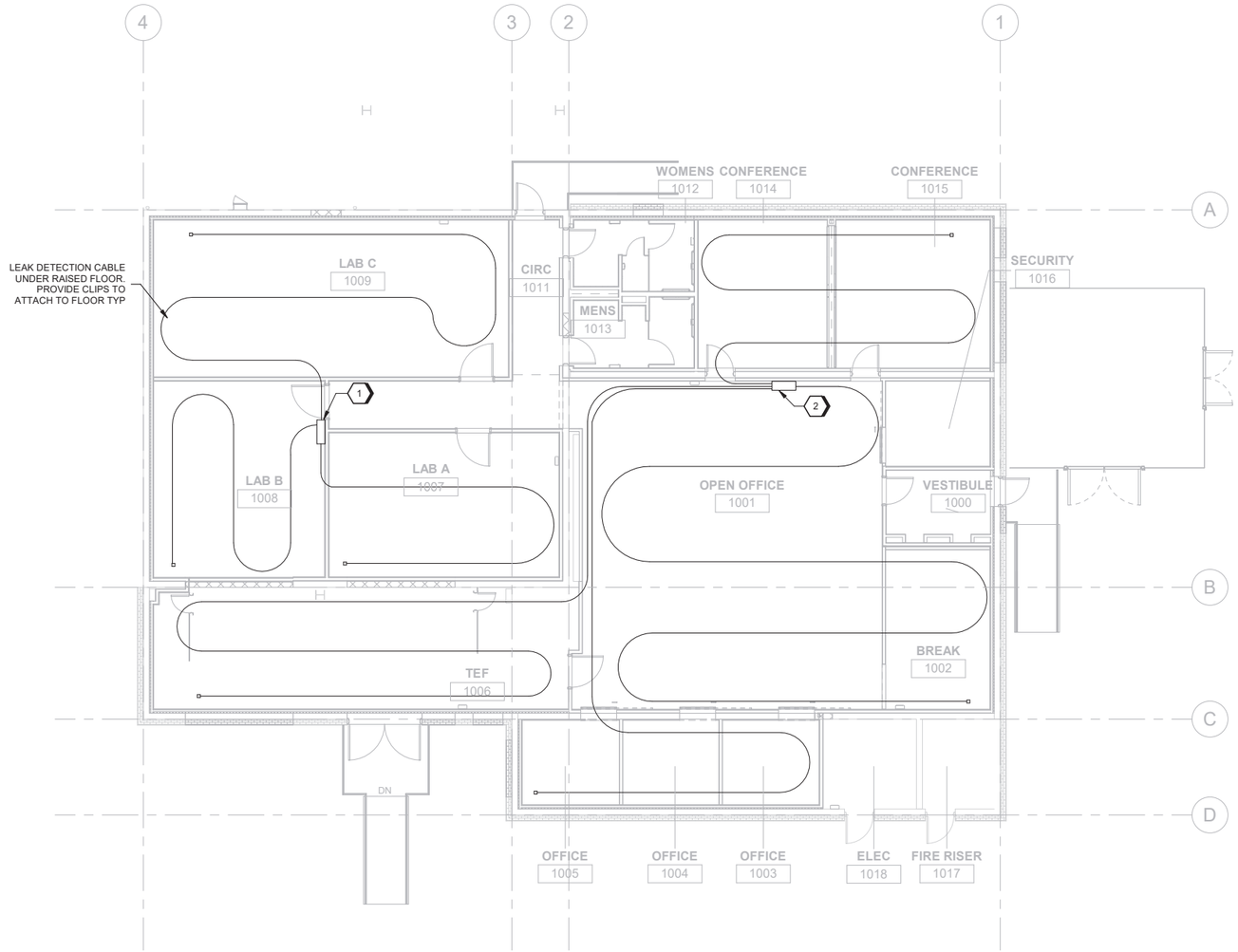

B1 UNDER FLOOR PLAN MECHANICAL
SCALE 1/8" = 1'-0"

GENERAL SHEET NOTES

#SHEET KEYNOTES

1. LDC-1. MONITOR A MIN OF 3 SEPARATE LEAK DETECTION CABLES.
2. LDC-2. MONITOR A MIN OF 4 SEPARATE LEAK DETECTION CABLES.

GRAPHIC SCALE(S)

PLAN NORTH

STATE OF OHIO
GREGORY HINTE
E-87905
4/28/26
REGISTERED
PROFESSIONAL ENGINEER

MARK	DESCRIPTION	DATE

ISSUE DATE: MAY 2026
ANG PROJECT NO.: PBXP222050
CONTRACT NO.: FA8803-21-D-0008
TASK ORDER NO.: W50S8R23F0009

DESIGNED BY: C. KORPASH
DRAWN BY: E. LEW
CHECKED BY: J. TEETER
SUBMITTED BY: D. PEARSON
SIZE: ANSI D

OHIO AIR NATIONAL GUARD
MANSFIELD LAHM AIR NATIONAL GUARD BASE, OH

JACOBS GOVERNMENT SERVICES
2600 MICHELSON SR., STE 500
IRVINE, CA 92812

MANSFIELD LAHM AIR NATIONAL GUARD BASE, OH
REPAIR B403 FOR CYBER
FA877006
UNDER FLOOR PLAN MECHANICAL

SHEET ID
M-103

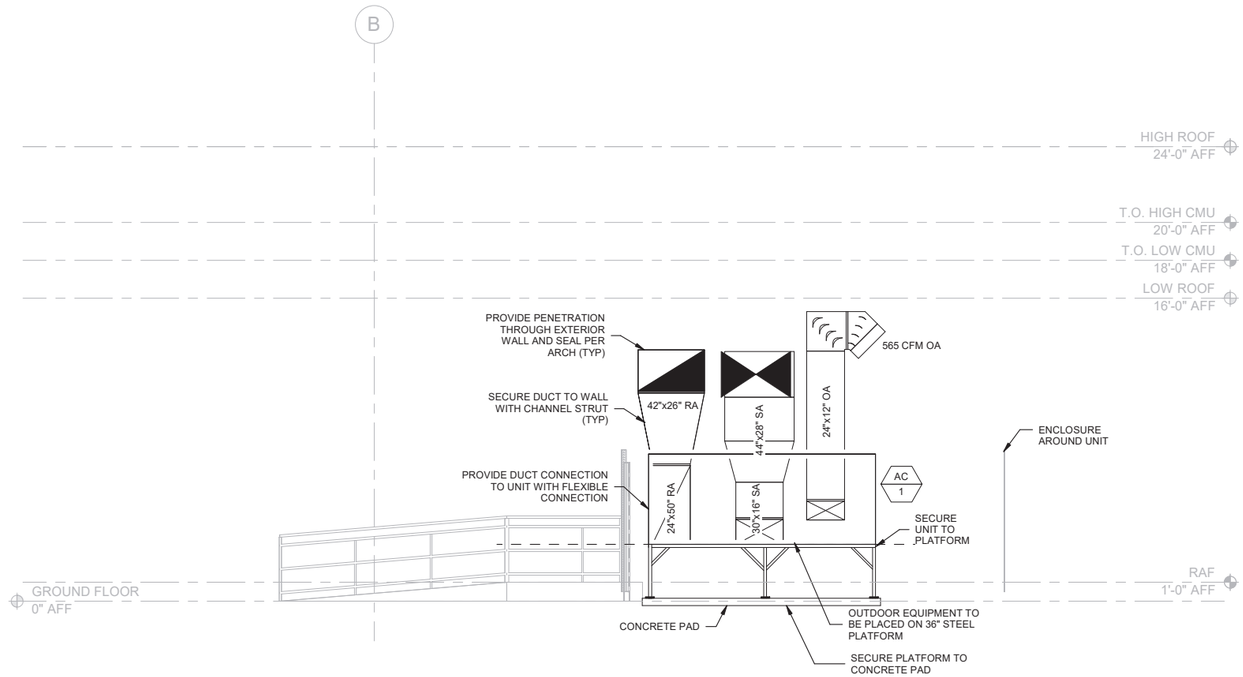

D1 AC-1 SECTION VIEW
SCALE 1/4" = 1'-0"

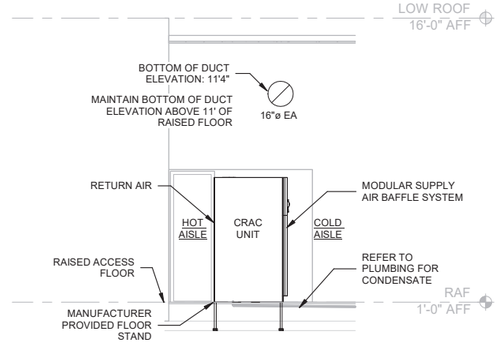

D7 CRAC UNIT SECTION VIEW
SCALE 1/4" = 1'-0"

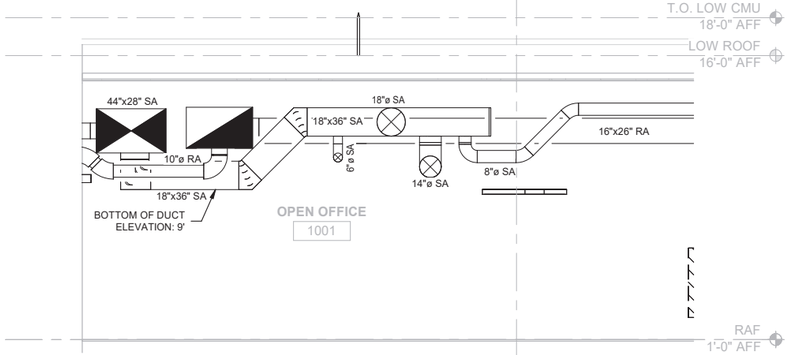

A1 OPEN OFFICE SECTION VIEW
SCALE 1/4" = 1'-0"

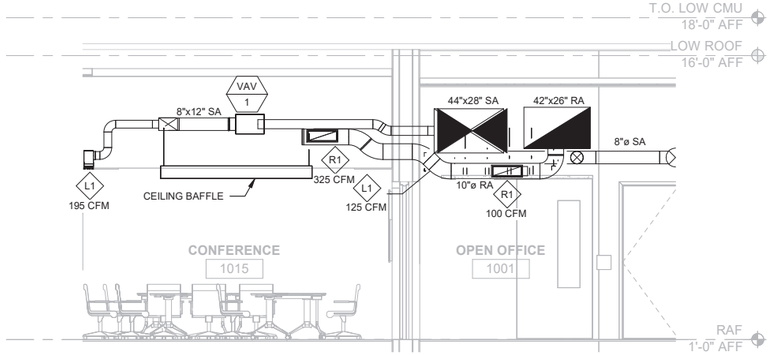

A6 SECURITY (1016) AND CONFERENCE (1015) ROOMS SECTION VIEW
SCALE 1/4" = 1'-0"

STATE OF OHIO
GREGORY HINTE
E-87905
4/28/26
REGISTERED
PROFESSIONAL ENGINEER

MARK	DESCRIPTION	DATE

DESIGNED BY: C. KORPASH
DRAWN BY: E. LEW
CHECKED BY: J. TEETER
SUBMITTED BY: PEARSON
SIZE: ANSI D

ISSUE DATE: MAY 2026
ANG PROJECT NO.: PBXP222050
CONTRACT NO.: FA8803-21-D-0008
TASK ORDER NO.: W56HZ3P00009

OHIO AIR NATIONAL GUARD
MANSFIELD LAHM AIR NATIONAL GUARD BASE, OH

JACOBS GOVERNMENT SERVICES
2600 MICHELSON SR. STE 500
IRVINE, CA 92612

MANSFIELD LAHM AIR NATIONAL GUARD BASE, OH
REPAIR B403 FOR CYBER
FA877006
MECHANICAL SECTIONS

SHEET ID
M-301

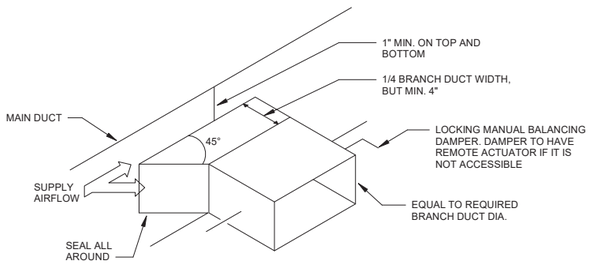

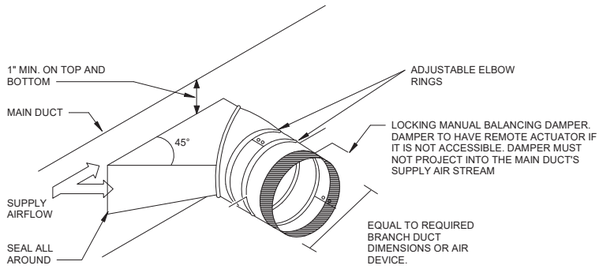

NOTES:
A. FOR RETURN/EXHAUST DUCT INSTALLATION THE ANGLE IS IN THE OPPOSITE DIRECTION

D1 TYPICAL BRANCH TAKE-OFF
SCALE NTS

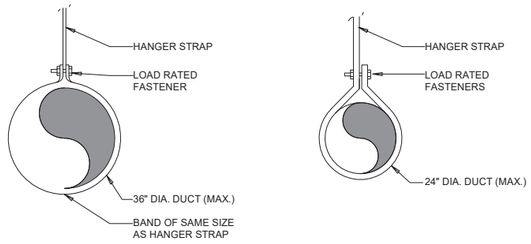

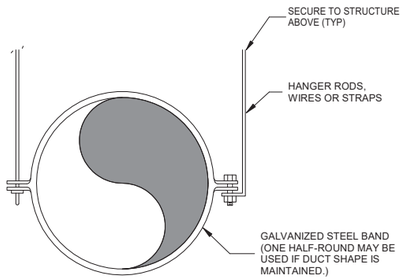

NOTES:
A. ANCHORAGE AND MOUNTING SUPPORT TYPE AND SIZES TO BE DESIGNED BY CONTRACTOR IN ACCORDANCE W/ SPEC 13 48 73

D6 ROUND DUCT HANGER
SCALE NTS

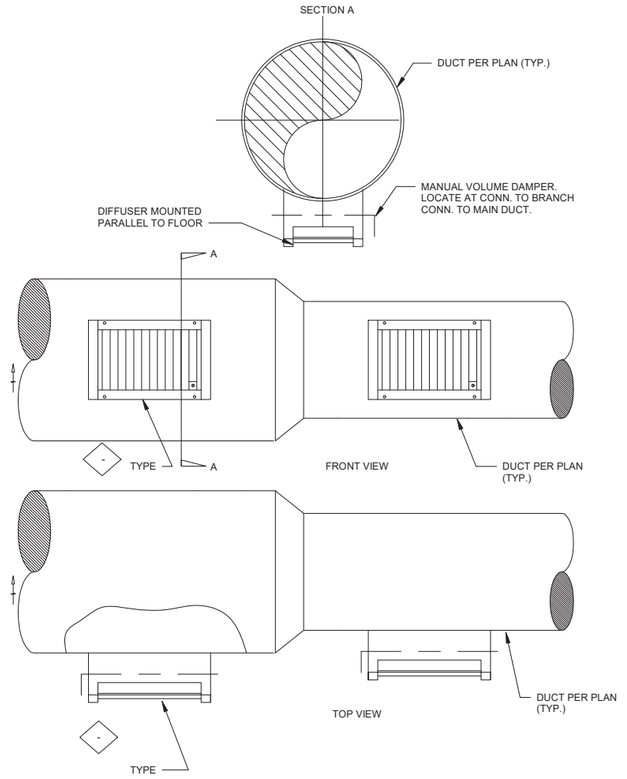

D7 SPIRAL DUCT MOUNTED REGISTER
SCALE NTS

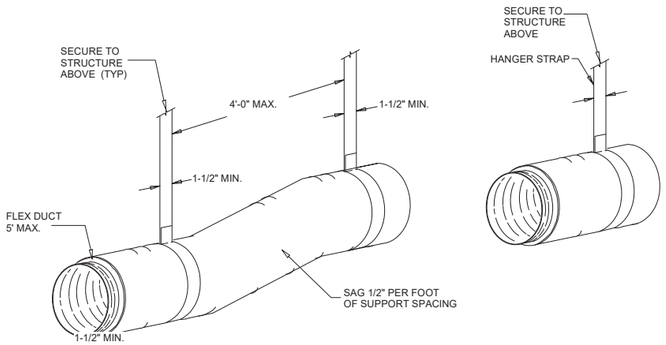

NOTES
A. INSTALL DUCTWORK PER SMACNA GUILDELINES. REFER TO "SMACNA DUCT CONSTRUCTION STANDARDS." LATEST EDITION.

A1 FLEXIBLE DUCTWORK HANGER
SCALE NTS

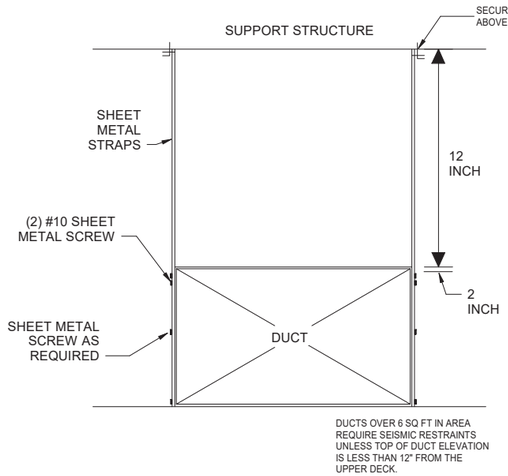

DUCTS OVER 6 SQ FT IN AREA REQUIRE SEISMIC RESTRAINTS UNLESS TOP OF DUCT ELEVATION IS LESS THAN 12" FROM THE UPPER DECK.

NOTES:
A. PROVIDE UPPER ATTACHMENTS, SUPPORTS, AND SMACNA REQUIREMENTS.

A4 TYPICAL DUCT SUPPORT
SCALE NTS

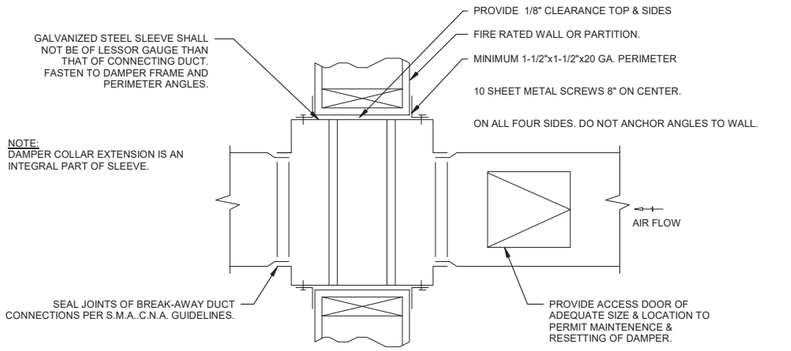

NOTES:
A. BPTJ OMSODE & OUTSIDE OF SMOKE/FIRE OR FIRE DAMPER SLEEVE SHALL BE COATED WITH INTUMESCENT MASTIC TO THE CENTERLINE OF THE FIRE DAMPER.
B. USE ONLY STATE OF CALIFORNIA FIRE MARSHAL LISTED SMOKE/FIRE OR FIRE DAMPERS & INSTALL IN ACCORDANCE WITH STATE FIRE MARSHAL LISTING NO. 03225 & U.L. STANDARD 555.
C. GENERAL CONTRACTOR SHALL COORDINATE CEILING ACCESS DOORS & DAMPER ACCESS DOORS AS REQUIRED FOR ACCESS TO DAMPERS.

TYPICAL FIRE DAMPER DETAIL

A7 TYPICAL SMOKE FIRE DAMPER DETAIL
SCALE 12" = 1'-0"

STATE OF OHIO
GREGORY HINTE
E-87905
4/28/09
REGISTERED
PROFESSIONAL ENGINEER

MARK	DESCRIPTION	DATE

DESIGNED BY: C. KORPASH
DRAWN BY: E. LEW
CHECKED BY: J. TEETER
SUBMITTED BY: PEARSON
SIZE: ANSI D
ISSUE DATE: MAY 2026
ANG PROJECT NO.: PBXP222050
CONTRACT NO.: FA8803-21-D-0008
TASK ORDER NO.: W56HRZ-3F0009

OHIO AIR NATIONAL GUARD
MANSFIELD LAHM AIR NATIONAL GUARD BASE, OH

JACOBS GOVERNMENT SERVICES
2600 MICHELSON SR. STE 500
IRVINE, CA 92612

MANSFIELD LAHM AIR NATIONAL GUARD BASE, OH
REPAIR B403 FOR CYBER
FA877006
MECHANICAL DETAILS

SHEET ID
M-501

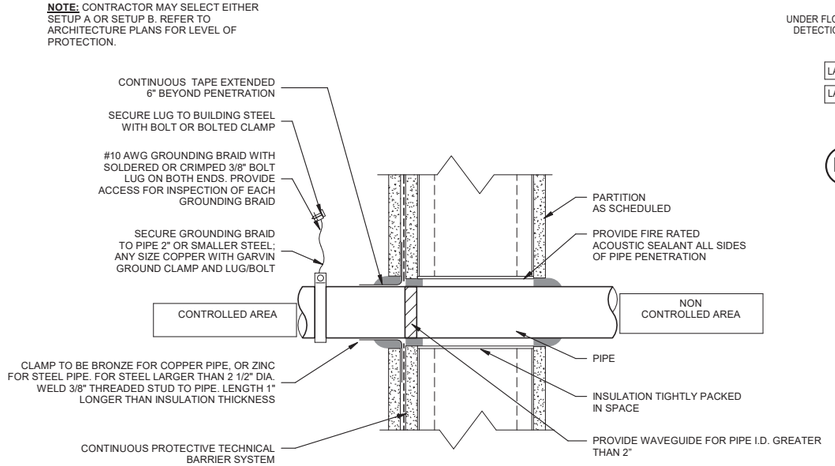

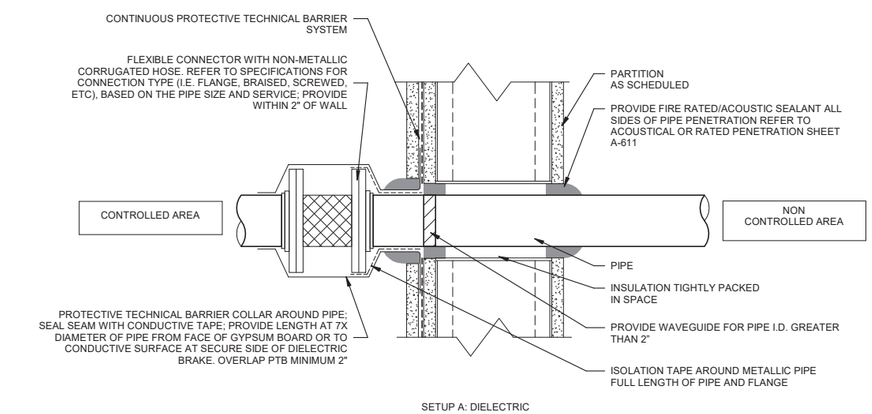

A1 CONTROLLED TO NON CONTROLLED BOUNDARY METAL PIPE PENETRATION
SCALE NTS

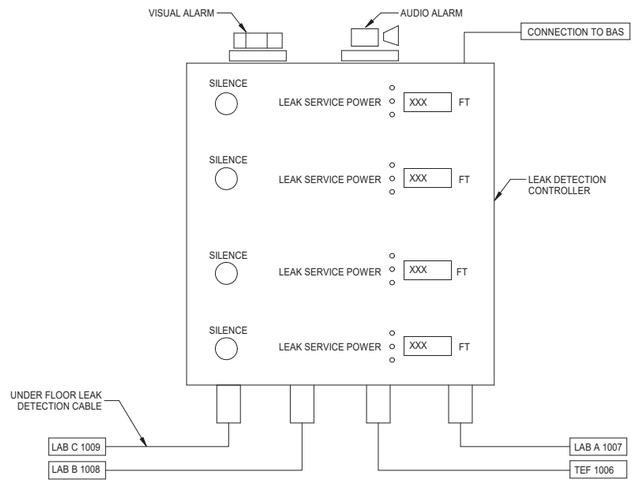

E5 LEAK DETECTION CONTROLLER
SCALE NTS

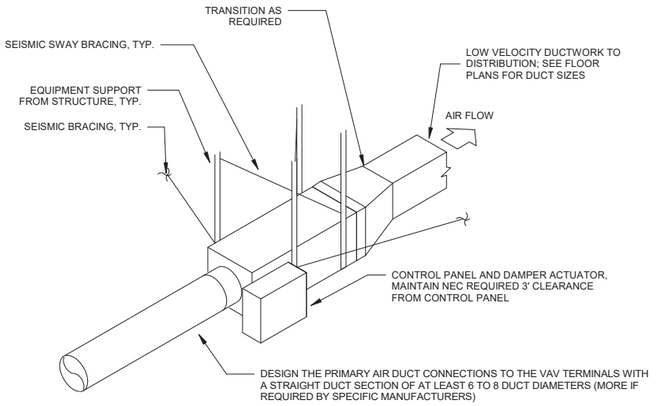

NOTES:
1. DO NOT SUPPORT UNIT WITH DUCTWORK (SUPPORT SEPARATELY).

A5 TYPICAL SINGLE DUCT TERMINAL UNIT
SCALE NTS

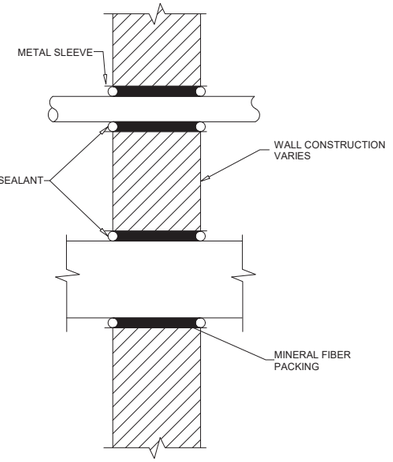

NOTES
1. SUPPORT PIPES & DUCTS ON EITHER SIDE OF WALL. PIPES AND DUCTS WILL NOT BE SUPPORTED BY WALL.

E7 DUCT/ PIPE PENETRATION THRU NON-RATED AND NON-CONTROLLED WALLS
SCALE NTS

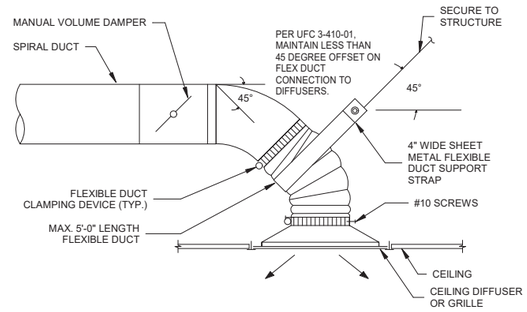

A8 LAY-IN DIFFUSER/ GRILL
SCALE NTS

STATE OF OHIO
GREGORY HINTE
E-87905
4/28/26
REGISTERED PROFESSIONAL ENGINEER

MARK	DESCRIPTION	DATE

DESIGNED BY: C. KORPASH
DRAWN BY: E. LEW
CHECKED BY: J. TEETER
SUBMITTED BY: D. PEARSON
SIZE: ANSI D
ISSUE DATE: MAY 2026
ANG PROJECT NO.: PBXP222050
CONTRACT NO.: FA8903-21-D-0008
TASK ORDER NO.: W9G5RC3P0009

OHIO AIR NATIONAL GUARD
MANSFIELD LAHM AIR NATIONAL GUARD BASE, OH

JACOBS GOVERNMENT SERVICES
2600 MICHELSON SR. STE 500
IRVINE, CA 92612

MANSFIELD LAHM AIR NATIONAL GUARD BASE, OH
REPAIR B403 FOR CYBER
FA877006
MECHANICAL DETAILS

SHEET ID
M-502

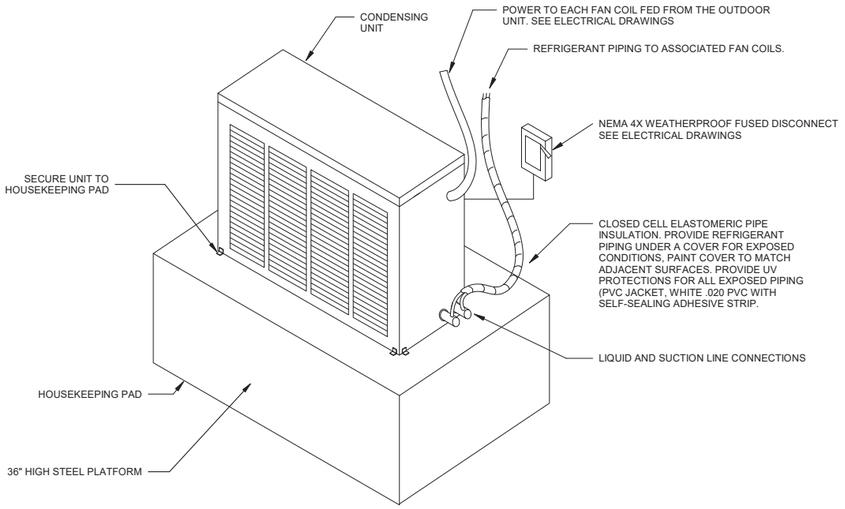

E1 CONDENSING UNIT
SCALE NTS

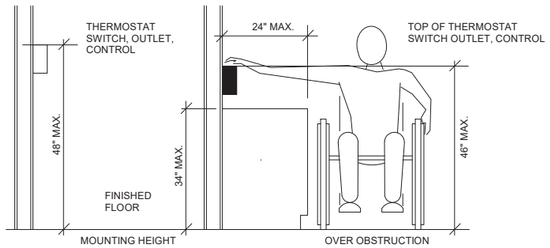

E5 THERMOSTAT MOUNTING
SCALE NTS

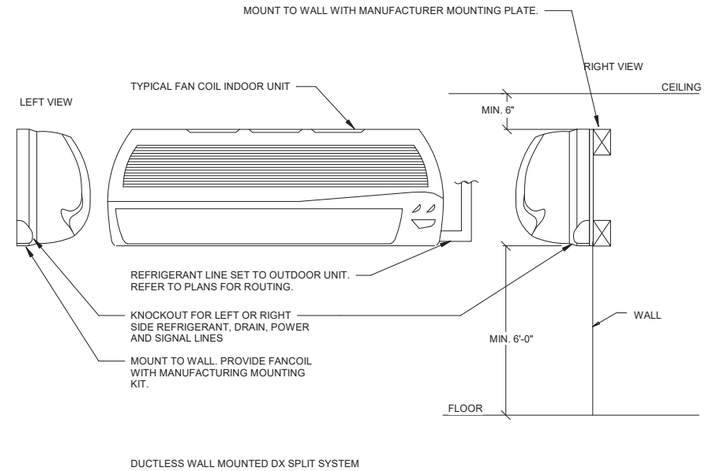

DUCTLESS WALL MOUNTED DX SPLIT SYSTEM

E7 FAN COIL MOUNTING
SCALE NTS

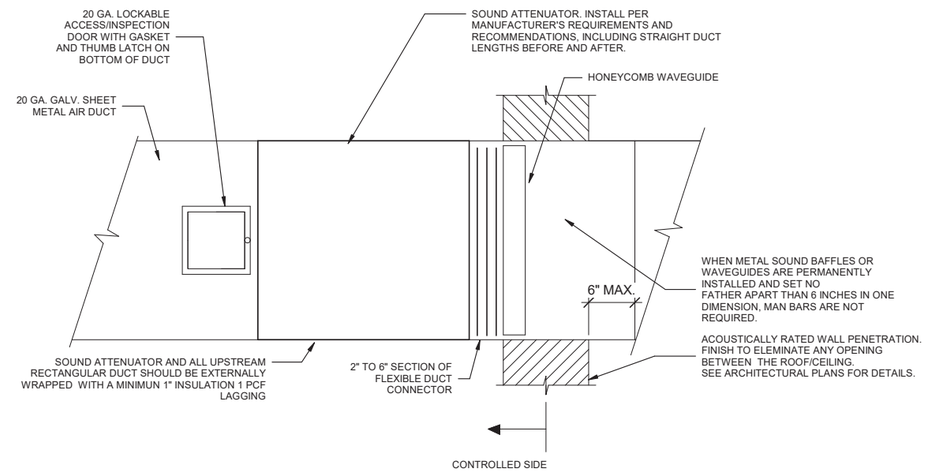

A1 SOUND ATTENUATOR
SCALE NTS

STANDARD CONSTRUCTION	
R-STC45: - 100 GA GALVANIZED CASING - 22GA GALVANIZED INTERNALS - GLASS FIBER ACOUSTIC MEDIA - 2" SLIP CONNECTION TYP.	R-STC50: - 18GA/18GA GALVANIZED CASING - 22GA GALVANIZED INTERNALS - GLASS FIBER ACOUSTIC MEDIA - 2" SLIP CONNECTION TYP.

GENERAL NOTES

1. SILENCER SHALL MEET THE STC WALL RATING AND SHALL BE DETERMINED ACCORDING TO ASTM 3413. SEE ARCHITECTURAL FOR EXACT WALL RATING.
2. SILENCER MATERIAL SHALL HAVE A FLAME SPREAD CLASSIFICATION <25 AND SMOKE DEVELOPMENT RATING <50 WHEN TESTED IN ACCORDANCE WITH ASTM E84, ULT23 AND NFPA255.
3. INSTALL TO COMPLY WITH ALL ICD 795 REQUIREMENTS.

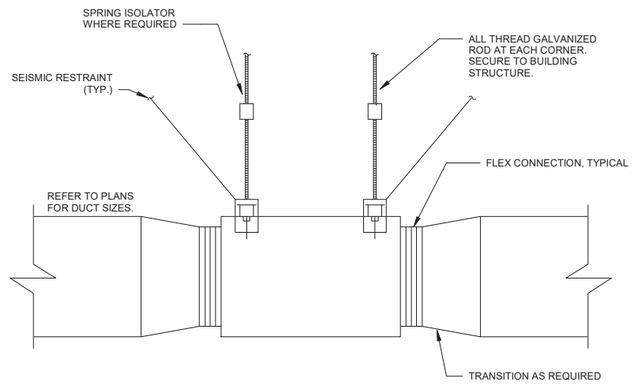

A7 INLINE EXHAUST FAN
SCALE NTS

STATE OF OHIO
GREGORY HINTE
E-87905
4/28/26
REGISTERED
PROFESSIONAL ENGINEER

MARK	DESCRIPTION	DATE

DESIGNED BY: C. KORPASH
DRAWN BY: E. LEW
CHECKED BY: J. TEETER
SUBMITTED BY: PEARSON
SIZE: ANSI D
ISSUE DATE: MAY 2026
ANG PROJECT NO.: PBXP222050
CONTRACT NO.: FA8903-21-D-0008
TASK ORDER NO.: W56HRZ-3F0009

OHIO AIR NATIONAL GUARD
MANSFIELD LAHM AIR NATIONAL GUARD BASE, OH

JACOBS GOVERNMENT SERVICES
2600 MICHELSON SR. STE 500
IRVINE, CA 92612

MANSFIELD LAHM AIR NATIONAL GUARD BASE, OH
REPAIR B403 FOR CYBER
FA877006
MECHANICAL DETAILS

SHEET ID
M-503

PACKAGED GRADE MOUNTED AIR CONDITIONING UNIT SCHEDULE

EQUIPMENT DESIGNATOR	EQUIPMENT NUMBER	LOCATION	SERVICE	NOMINAL TONS	REFRIG TYPE	AMBIENT DRY BULB (ºF)	OSA (CFM)	SUPPLY FAN					COOLING COIL							GAS HEATING			ELECTRICAL			FILTERS		OPER WEIGHT (LBS)	STANDBY POWER	NOTES
								CFM	ESP (IN.WG)	FAN RPM	BHP	HP	TOTAL (MBH)	SENS (MBH)	EER	EAT		LAT		INPUT (MBH)	EAT (°F)	LAT (°F)	MCA	MOCP	V/HZ/PH	EFF (MERV)	TYPE			
																DB (ºF)	WB (ºF)	DB (ºF)	WB (ºF)										
AC	1	GRADE	GROUND FLOOR	20	R-454B	91.0	650	7465	1.5	1357	7.51	11.50	236.5	166.3	10.80	73.5	62.6	55.5	52.6	283.5	52	88	58	70	460/3/60	13	4" PLEATED	2510	YES	1-18

NOTES:
1. SITE ELEVATION IS 1296 FT.
2. CONDENSING TEMP IS 86F + 5F = 91F.
3. MECHANICAL EQUIPMENT TO BE ON STAND BY POWER INCLUDING DDC BASED BACNET CONTROLS.
4. ASHRAE 15 COMPLIANT REFRIGERATION DETECTION SYSTEM AND CONTROLS.
5. FOUR STAGE COMPRESSORS.
6. FULL PERIMETER BASE RAILS WITH BUILT IN RIGGING.
7. LOW LEAKAGE MOTORIZED DAMPER ON OSA. 3 CFM/SF AT 1" ACROSS DAMPER
8. AIR FLOW MONITORING STATION ON OSA.
8. 6 COPPER TUBE/ALUMINUM FIN EVAPORATOR COILS.
9. MICROCHANNEL CONDENSER COILS.
10. LOW AMBIENT KIT.
11. UNIT MOUNTED CIRCUIT BREAKER.
12. VARIABLE FREQUENCY DRIVE WITH MANUAL BYPASS. MAX 60 HZ.
13. BACNET INTERFACE CARD.
14. MODULATING GAS HEAT WITH 2.85 TO 1 TURNDOWN.
15. STAINLESS STEEL HEAT EXCHANGER.
16. UNIT CABINET POWDER PAINT FINISH MIN 750 HR SALT SPRAY PER ASTM B117 STANDARDS.
17. SIDE DISCHARGE SUPPLY AND RETURN DUCTWORK.
18. HAIL GUARD.

EXHAUST FAN SCHEDULE

EQUIPMENT DESIGNATOR	EQUIPMENT NUMBER	SERVICE	UNIT TYPE	DRIVE TYPE	FAN DATA			MOTOR DATA			WEIGHT (LBS)	STANDBY POWER	NOTES
					CFM	SP (IN. W.G.)	FAN SPEED (RPM)	MOTOR POWER (HP)	MOTOR SPEED (RPM)	V/HZ/PH			
EF	1	RESTROOMS	INLINE	DIRECT	100	0.5	1382	0.125	1725	208/60/1	57	YES	1-6
EF	2	LAB A	INLINE	BELT	810	1.1	1834	0.75	1725	208/60/1	148	YES	1,2,3,5,6&7
EF	3	LAB B	INLINE	BELT	810	0.5	1834	0.75	1725	208/60/1	148	YES	1,2,3,5,6&7
EF	4	LAB C	INLINE	BELT	1335	0.5	2607	0.75	1725	208/60/1	148	YES	1,2,3,5,6&7
EF	5	TEF	INLINE	BELT	945	0.5	1941	0.75	1725	208/60/1	148	YES	1,2,3,5,6&7

NOTES:
1. PROVIDE INTEGRAL DISCONNECT SWITCH.
2. OSHA BELT GUARD.
3. INLET/OUTLET FLEX DUCT CONNECTOR.
4. LOW LEAKAGE MOTORIZED DAMPER.
5. CEILING MOUNTED RUBBER IN SHEAR ISOLATORS.
6. STARTER.
7. UL705 FOR SMOKE CONTROL.

AIR TERMINAL SCHEDULE

TYPE MARK	SERVICE	TYPE	NECK SIZE	FACE SIZE	MAX FLOW (CFM)	MAX THROW (FT)	MAX NOISE CRITERIA	NOTES
E1	EXHAUST	CEILING	8"X8"	10"x10"	220	-	11	1-7
E2	EXHAUST	SIDEWALL	10"X10"	12"X12"	450	-	20	1-7
R1	RETURN	SIDEWALL	10"x10"	12"x12"	410	-	20	1-7
R2	RETURN	SIDEWALL	12"x12"	14"14"	490	-	19	1-7
R3	RETURN	SIDEWALL	20"X20"	22"x22"	1570	-	23	1-7
SS1	SUPPLY	SIDEWALL	6"X6"	8"X8"	133	-	19	1-7
SS2	SUPPLY	SIDEWALL	8"X8"	10"X10"	220	16	16	1-7
SS3	SUPPLY	SIDEWALL	12"X10"	14"X12"	435	19	19	1-7
L1	SUPPLY	LINEAR DIFFUSER	6"/5"	24"x6"	300	15	17	2-3, 5-7

NOTES:
1. BORDER TYPE MUST BE COMPATIBLE WITH CEILING.
2. REFER TO ARCH DRAWINGS FOR CEILING TYPE AND FINISH.
3. PROVIDE TRANSITION FROM SQUARE NECK TO ROUND DUCT CONNECTION WHERE APPLICABLE.
4. PROVIDE OPPOSED BLADE DAMPERS.
5. PROVIDE FACTORY ANODIZED WHITE.
6. PROVIDE INSULATED PLENUM.
7. PROVIDE WITH TWO 1" SLOTS.

VARIABLE AIR VOLUME BOX SCHEDULE

EQUIPMENT DESIGNATOR	EQUIPMENT NUMBER	UNIT SIZE (IN)	AIRFLOW (CFM)		STATIC PRESSURE			NC LEVELS		NOTES
			MAX	MIN	INLET	DOWN	MIN	DISCH.	RAD	
VAV	1	6	380	115	1	0.25	0.12	24	25	1-4
VAV	2	6	380	115	1	0.25	0.12	24	25	1-4
VAV	3	5	215	65	1	0.25	0.04	20	29	1-4
VAV	4	12	1275	380	1	0.25	0.01	25	27	1-4
VAV	5	10	1065	320	1	0.25	0.01	25	29	1-4
VAV	6	10	1110	335	1	0.25	0.01	26	29	1-4
VAV	7	14	1840	550	1	0.25	0.03	24	23	1-4
VAV	8	6	380	115	1	0.25	0.08	24	25	1-4
VAV	9	8	780	235	1	0.25	0.02	25	28	1-4

NOTES:
1. PROVIDE MANUFACTURER SUPPLIED STEP DOWN TRANSFORMER FROM 120V/1PH/60HZ TO 24V.
2. BACNET DDC CONTROLLER.
3. PROVIDE INTEGRAL DISCONNECT SWITCH.
4. HANGER BRACKETS.

FAN COIL UNIT SCHEDULE

EQUIPMENT DESIGNATOR	EQUIPMENT NUMBER	SERVICE	COOLING				HEATING			SUPPLY AIR (CFM)	REFRIGERANT TYPE	NOTES
			TOTAL (MBH)	SENSIBLE (MBH)	ENTERING AIR		LEAVING AIR		CAPACITY (MBH)	EAT. DB (°F)	LAT. DB (°F)			
					DB (°F)	WB (°F)	DB (°F)	WB (°F)						
FC	1	ELECTRICAL 1018	31.93	22.58	78	61	-	-	42.84	59	68	-	R32	1-4
FC	2	FIRE RISER 1017	10.38	8.88	78	61	-	-	15.13	59	68	-	R32	1-4

NOTES:
1. FAN COIL UNIT IS POWERED BY THE OUTDOOR HEAT PUMP.
2. PROVIDE A PROGRAMMABLE THERMOSTAT, HARDWIRE THERMOSTAT TO FAN COIL UNIT.
3. PROVIDE FACTORY-MOUNTED BRACKET.
4. PROVIDE INTERNALLY MOUNTED CONDENSATE PUMP. POWER CONDENSATE PUMP FROM THE INDOOR UNIT. FIELD WIRE THE PUMP TO THE INDOOR UNIT.

HEAT PUMP SCHEDULE

EQUIPMENT DESIGNATOR	EQUIPMENT NUMBER	LOCATION	SERVICE	EFFICIENCY		ELECTRICAL DATA			CONDENSING TEMPERATURE (°F)	WINTER OUTDOOR TEMP (°F)	REFRIGERANT TYPE	STANDBY POWER	NOTES
				COOLING	HEATING	V/HZ/PH	MCA	MOCP					
HP	1	OUTDOOR	FC-1	20.0 SEER	9.0 HSPF2	208-230/60/1	35.8	40	91.0	4.0	R32	YES	1-3
HP	2	OUTDOOR	FC-2	25.0 SEER	10.5 HSPF2	208-230/60/1	12	20	91.0	4.0	R32	YES	1-3

NOTES:
1. PROVIDE FACTORY CORROSION COATING PER ASTM B117, 500 HOURS OF SALT SPRAY, COATING SHALL BE APPLIED TO COIL AND CASING, FIELD APPLIED IS NOT ACCEPTABLE.
2. PROVIDE INTEGRAL DISCONNECT SWITCH.
3. PROVIDE HAIL GUARD.

IN ROW COMPUTER ROOM AIR CONDITIONING SCHEDULE

EQUIPMENT DESIGNATOR	EQUIPMENT NUMBER	SERVICE	REFRIGERANT TYPE	SUPPLY AIR (CFM)	NET TOTAL COOLING CAPACITY (KBTU/HR)	QTY FAN	FAN TYPE	ESP	V/PH/60	FLA	WSA	OPD	WEIGHT (LBS)	STANDBY POWER	NOTES
CRAC	1	LAB A	R-410A	3500	127	2	EC PLUG	0	460/3/60	28.4	33.4	50	805	YES	1-16
CRAC	2	LAB B	R-410A	3500	127	2	EC PLUG	0	460/3/60	28.4	33.4	50	805	YES	1-16
CRAC	3	LAB C	R-410A	3500	127	2	EC PLUG	0	460/3/60	28.4	33.4	50	805	YES	1-16
CRAC	4	TEF	R-410A	3500	127	2	EC PLUG	0	460/3/60	28.4	33.4	50	805	YES	1-16
CRAC	5	TEF	R-410A	3500	127	2	EC PLUG	0	460/3/60	28.4	33.4	50	805	YES	1-16
CRAC	6	TEF	R-410A	3500	127	2	EC PLUG	0	460/3/60	28.4	33.4	50	805	YES	1-16
CRAC	7	TEF	R-410A	3500	127	2	EC PLUG	0	460/3/60	28.4	33.4	50	805	YES	1-16
CRAC	8	TEF	R-410A	3500	127	2	EC PLUG	0	460/3/60	28.4	33.4	50	805	YES	1-16

NOTES:
1. DX COOLING COIL. COPPER TUBE/ALUMINUM FIN.
2. DIGITAL SCROLL COMPRESSOR.
3. EC PLUG FANS.
4. SUPPLY AIR BAFFLE.
5. INTEGRAL CONTROL SYSTEM WITH COLOR TOUCHSCREEN.
6. (3) RACK TEMPERATURE SENSORS.
7. MERV 8 FILTER.
8. INTEGRAL CONDENSATE PUMP.
9. LOW NOISE PACAKAGE.
10. BACNET INTERFACE CARD.
11. LOW AMBIENT.
12. PROVIDE INTEGRAL DISCONNECT SWITCH.
13. ALTITUDE = 1296 FT.
14. LEAK DETECTION FOR UNDERFLOOR.
15. EPA PHASE OUT FOR R-410A IN CRAC UNITS IN JAN 1 2027. NEW SNAP APPROVED REFRIGERANTS MAY BE PROVIDED IF AVAILABLE.
16. ASHRAE 15 COMPLIANT REFRIGERATION DETECTION SYSTEM AND CONTROLS.

COMPUTER ROOM CONDENSER SCHEDULE

EQUIPMENT DESIGNATOR	EQUIPMENT NUMBER	SERVICE	REFRIGERANT TYPE	CONNECTION SIZES, OD, IN		FAN		ELECTRICAL				CONDENSING TEMPERATURE (°F)	WEIGHT (LBS)	EMER. POWER	NOTES
				HOT GAS LINE	LIQUID LINE	QTY FAN	FAN TYPE	V/PH/HZ	FLA	WSA	OPD				
ACCU	1	CRAC-1	R-410A	7/8	5/8	2	EC PLUG	460/3/60	1.4	1.8	15	91	260	YES	1-3
ACCU	2	CRAC-2	R-410A	7/8	5/8	2	EC PLUG	460/3/60	1.4	1.8	15	91	260	YES	1-3
ACCU	3	CRAC-3	R-410A	7/8	5/8	2	EC PLUG	460/3/60	1.4	1.8	15	91	260	YES	1-3
ACCU	4	CRAC-4	R-410A	7/8	5/8	2	EC PLUG	460/3/60	1.4	1.8	15	91	260	YES	1-3
ACCU	5	CRAC-5	R-410A	7/8	5/8	2	EC PLUG	460/3/60	1.4	1.8	15	91	260	YES	1-3
ACCU	6	CRAC-6	R-410A	7/8	5/8	2	EC PLUG	460/3/60	1.4	1.8	15	91	260	YES	1-3
ACCU	7	CRAC-7	R-410A	7/8	5/8	2	EC PLUG	460/3/60	1.4	1.8	15	91	260	YES	1-3
ACCU	8	CRAC-8	R-410A	7/8	5/8	2	EC PLUG	460/3/60	1.4	1.8	15	91	260	YES	1-3

NOTES:
1. 36" GALVANIZED LEGS.
2. EC FAN MOTOR.
3. ALUMINUM MICRO CHANNEL COIL.

UNIT HEATER SCHEDULE

EQUIPMENT DESIGNATOR	EQUIPMENT NUMBER	SERVICE	HEATING CAPACITY (kW)	AIRFLOW (CFM)	TEMP RISE (°F)	HEAT THROW (FT)	DIMENSION (LxWxH)	WEIGHT (LBS)	V/HZ/PH	NOTES
UH	1	TEF	4.3	425	32	20	27"X15"X11.4"	48	208/60/1	1
UH	2	VESTIBULE	0.5	-	-	-	26"X3"X8"	48	208/60/1	1
UH	3	MENS	0.5	-	-	-	26"X3"X8"	7.8	208/60/1	1
UH	4	WOMENS	0.5	-	-	-	26"X3"X8"	7.8	208/60/1	1

NOTES:
1. PROVIDE EXTERNAL DISCONNECT SWITCH.

SOUND ATTENUATOR SCHEDULE

TAG	SYSTEM	DIMENSIONS		AIRFLOW (CFM)	VELOCITY (FPM) (NOTE 2)	IDEAL DP IN.W.G. (NOTE 3)	MINIMUM DYNAMIC INSERTION LOSS, DB (NOTE 4)								NOTES
		DUCT SIZE (IN)	LENGTH (IN)				OCTAVE BAND CENTER FREQUENCY, HZ								
							63	125	250	500	1000	2000	4000	8000	
SA-1	EXHAUST	16"ø	144	1335	-593	0.18	14	23	49	55	52	51	38	26	5,6,7
SA-2	SUPPLY	18"ø	144	1275	+378	0.07	15	23	38	46	55	55	41	26	5, 6, 8
SA-3	RETURN	16"ø	144	1225	-480	0.12	14	23	49	55	52	51	38	26	5, 6, 7
SA-4	SUPPLY	18"x12"	144	1070	+670	0.23	13	20	46	55	52	55	44	30	5, 6, 9
SA-5	RETURN	16"x12"	144	1020	-769	0.2	12	21	41	55	55	55	38	27	5, 6, 9
SA-6	EXHAUST	16"ø	144	810	-316	0.05	14	23	49	55	52	51	38	26	5, 6, 7
SA-7	SUPPLY	18"ø	144	1110	+432	0.09	15	23	38	46	55	55	41	26	5, 6, 8
SA-8	RETURN	16"x12"	144	1065	-855	0.25	12	21	41	55	55	55	38	27	5, 6, 9
SA-9	EXHAUST	16"ø	144	810	-307	0.05	14	23	49	55	52	51	38	26	5, 6, 7
SA-10	EXHAUST	16"ø	144	945	-420	0.09	14	23	49	55	52	51	38	26	5, 6, 7
SA-11	EXHAUST	16"ø	144	810	-307	0.05	14	23	49	55	52	51	38	26	5, 6, 7
SA-12	EXHAUST	12"x12"	144	100	-100	0.01	15	26	48	48	55	55	36	20	5, 6, 9
SA-13	RETURN	42"x26"	144	6715	-862	0.25	12	21	41	55	55	55	38	27	5, 6, 9
SA-14	SUPPLY	44x28"	144	7465	+847	0.33	14	23	39	47	55	55	36	23	5, 6, 9

NOTES:
1. TYPE R-RECTANGULAR D-DISSIPATIVE
2. VELOCITY SHOWN AS (+) INDICATES FORWARD FLOW OR (-) AS REVERSE FLOW AS DEFINED BY ASTM E477-20.
3. IDEAL PRESSURE DROP AS DETERMINED PER ASTM 3477-20 IN A NVLAP-ACCREDITED ACOUSTICAL LABORATORY.
4. MINIMUM DYNAMIC INSERTION LOSS DETERMINED PER ASTM E477-20 IN A NVLAP-ACCREDITED ACOUSTICAL LABORATORY.
5. CASING TO BE HTL EQUIVALENT TO 10 GAUGE DUCT WALL TO CONTROL BREAKOUT.
6. FOR NON-BASIS OF DESIGN PRODUCT SUPPLIED, CONTRACTOR IS FINANCIALLY RESPONSIBLE TO ENSURE NOISE CONTROL SOLUTION IS DELIVERED TO ACHIEVE SPECIFIED NC LEVEL IN SPACES.

NOTES:
1. ALL EQUIPMENT SHALL BE ON STANDBY POWER
2. SITE ELEVATION IS 1,296 FT
3. OUTDOOR EQUIPMENT TO BE PLACED ON 36" HIGH STEEL PLATFORM

STATE OF OHIO
GREGORY HINTE
E-87905
4/28/26
REGISTERED
PROFESSIONAL ENGINEER

MARK	DESCRIPTION	DATE

ISSUE DATE: MAY 2026
ANG PROJECT NO.: PBXP222050
CONTRACT NO.: FA8803-21-D-0008
TASK ORDER NO.: W56SRK23F0009

DESIGNED BY: C. KORPASH
DRAWN BY: E. LEW
CHECKED BY: J. TEETER
SUBMITTED BY: S. PEARSON
SIZE: ANSI D

OHIO AIR NATIONAL GUARD
MANSFIELD LAHM AIR NATIONAL GUARD BASE, OH

JACOBS GOVERNMENT SERVICES
2600 MICHELSON SR. STE 500
IRVINE, CA 92812

MANSFIELD LAHM AIR NATIONAL GUARD BASE, OH
REPAIR B403 FOR CYBER
FA877006
MECHANICAL SCHEDULES

SHEET ID
M-601

TYPE B-3 FINAL

BUILDING SYSTEM ARCHITECTURE SCHEMATIC

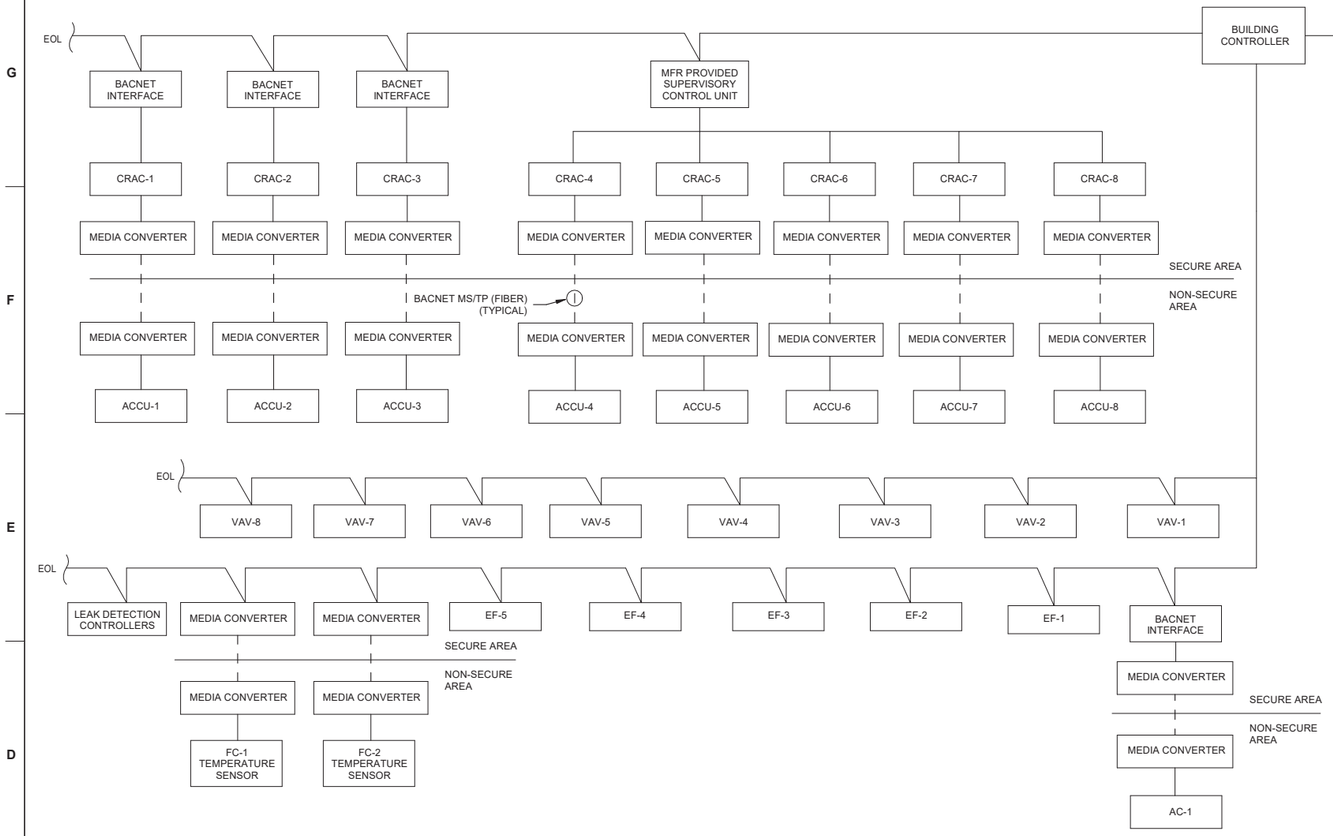

NOTES:
1. CRAC UNITS MAINTAIN LOCAL CONTROL FOR TEMPERATURE/HUMIDITY REGULATION. BAS PROVIDES MONITORING ONLY FOR STATUS AND ALARMS.
2. COORDINATE SECURE AREA PENETRATION WITH TELECOM TO MINIMIZE PENETRATIONS.

CONTROLS GENERAL NOTES

A. PROVIDE THE GOV WITH SOFTWARE, CONTROL PROGRAM, LICENSING, PASSWORDS & ADMINISTRATIVE RIGHTS FOR EDITING (OF THE CONTROL'S PROGRAMMING FOR THE LIFE OF THE CONTROLS), AND GRAPHICS (I.E. FLOOR PLANS ETC.) THAT ARE REQUIRED TO OPERATE AND SUPPORT THESE CONTROLS.

B. PROVIDE 2 ELECTRONIC COPIES (CD) OF NEW CONTROL PROGRAM, SEQUENCE OF OPERATION, EQUIPMENT ELECTRICAL SCHEMATIC, EQUIPMENT CONTROL PANEL COMPONENT LOCATION/S AND LABELING OF COMPONENTS.

C. EQUIPMENT WITH INTEGRAL CONTROLS SHALL BE EQUIPPED AND ENABLED FOR EITHER BACNET MS/TP OR BACNET IP COMMUNICATION. PROVIDE MANUFACTURER BACNET POINT LIST WITH ADDRESSES.

D. PROVIDE LAMINATED SCHEMATICS OF CONTROLLER IN DDC CABINET.

E. PROVIDE HAND-OFF AUTO SWITCHES ON ALL APPLICABLE EQUIPMENT.

F. SPLIT SYSTEM FAN COIL UNITS ARE CONTROLLED BY THE MANUFACTURER PROVIDED T-STATS (NOT CONNECTED TO BAS). PROVIDED ROOM TEMPERATURE SENSOR AND PROVIDE ALARM FOR TEMPS OVER 80 DEGREES F.

G. THE BUILDING AUTOMATION SYSTEM IS A DELEGATED DESIGN.

H. CONTRACTOR SHALL UPDATE THE EXISTING SITE-WIDE SYSTEM WITH NEW BAS DEVICES AS NEEDED TO ACCOMMODATE NEW SYSTEM.

I. COORDINATE WITH ELECTRICAL CONTRACTOR FOR ELECTRICAL SERVICE TO CONTROL COMPONENTS.

J. USE PUSH BUTTON SWITCHES TO AUTOMATICALLY TURN OFF AIR-MOVING DEVICES PER UFC 4-010-01 DOD ANTI-TERRORISM STANDARDS FOR BUILDINGS. SEE FLOOR PLAN FOR AT/FP BUTTON LOCATIONS.

K. PROVIDE BACNET MS/TP TO FIBER MEDIA CONVERTERS FOR ALL COMMUNICATION WIRING CROSSING SECURE BOUNDARIES. FOR CONTROLLED AREA, HVAC CONTROL/MONITORING SYSTEMS WILL BE INSTALLED IAW ICD 705, CH11.F. ROUTERS/GATEWAYS WILL BE INSTALLED 10FT FROM CONTROLLED AREA BOUNDARY. SEE TELECOM SHEETS. INSTALL MEDIA CONVERTERS PER MANUFACTURER GUIDELINES. DO NOT MOUNT CONTROLS COMPONENTS (MEDIA CONVERTERS, ROOM SENSORS, ETC) DIRECTLY TO ANY CONTROLLED AREA PERIMETER WALLS. PROVIDE INDEPENDENT SUPPORT STRUCTURE.

UTILITY METERING AND REPORT GENERATION:

REFER TO INDIVIDUAL DISCIPLINES FOR RELATED AMI TYPE SMART METERS.

ELECTRIC METER:
MONITOR THE ELECTRIC METER FOR ELECTRIC CONSUMPTION ON A CONTINUAL BASIS. THESE VALUES SHALL BE MADE AVAILABLE TO THE SYSTEM AT ALL TIMES. ALARM SHALL BE GENERATED AS FOLLOWS:
METER FAILURE: SENSOR READING INDICATES A LOSS OF PULSE OUTPUT FROM THE ELECTRIC METER.
PEAK DEMAND HISTORY:
MONITOR AND RECORD THE PEAK (HIGH AND LOW) DEMAND READINGS FROM THE ELECTRIC METER. PEAK READINGS AHLL BE RECORDED ON A DAILY, WEEKLY, MONTHLY, MONTH TO DATE, YEARLY AND YEAR TO DATE BASIS.
USAGE HISTORY:
THE CONTROLLER SHALL MONITOR AND RECORD ELECTRIC METER READINGS SO AS TO PROVIDE A POWER CONSUMPTION HISTORY, USAGE READINGS SHALL BE RECORDED ON A DAILY, WEEKLY, MONTHLY, MONTH TO DATE, YEARLY AND YEAR TO DATE BASIS.

WATER METER:
MONITOR THE WATER METER FOR WATER CONSUMPTION ON A CONTINUAL BASIS. THESE VALUES SHALL BE MADE AVAILABLE TO THE SYSTEM AT ALL TIMES. ALARM SHALL BE GENERATED AS FOLLOWS:
METER FAILURE: SENSOR READING INDICATES A LOSS OF PULSE OUTPUT FROM THE WATER METER.
PEAK DEMAND HISTORY:
MONITOR AND RECORD THE PEAK (HIGH AND LOW) DEMAND READINGS FROM THE WATER METER. PEAK READINGS SHALL BE RECORDED ON A DAILY, WEEKLY, MONTHLY, MONTH TO DATE, YEARLY AND YEAR TO DATE BASIS.
USAGE HISTORY:
MONITOR AND RECORD WATER METER READINGS SO AS TO PROVIDE A WATER CONSUMPTION HISTORY. USAGE READINGS SHALL BE RECORDED ON A DAILY, WEEKLY, MONTHLY, MONTH TO DATE, YEARLY AND YEAR TO DATE BASIS.

GAS METER:
MONITOR THE GAS METER FOR GAS CONSUMPTION ON A CONTINUAL BASIS. THESE VALUES SHALL BE MADE AVAILABLE TO THE SYSTEM AT ALL TIMES. ALARM SHALL BE GENERATED AS FOLLOWS:
METER FAILURE: SENSOR READING INDICATES A LOSS OF PULSE OUTPUT FROM THE GAS METER.
PEAK DEMAND HISTORY:
MONITOR AND RECORD THE PEAK (HIGH AND LOW) DEMAND READINGS FROM THE GAS METER. PEAK READINGS SHALL BE RECORDED ON A DAILY, WEEKLY, MONTHLY, MONTH TO DATE, YEARLY AND YEAR TO DATE BASIS.
USAGE HISTORY:
MONITOR AND RECORD GAS METER READINGS SO AS TO PROVIDE A GAS CONSUMPTION HISTORY. USAGE READINGS SHALL BE RECORDED ON A DAILY, WEEKLY, MONTHLY, MONTH TO DATE, YEARLY AND YEAR TO DATE BASIS.

EQUIPMENT STAGING AND TRANSFER SWITCH MONITORING:

REFER TO ELECTRICAL FOR GENERATOR SIZING.

CONTINUOUSLY MONITOR THE AUTOMATIC TRANSFER SWITCH FOR CHANGE OF POWER SOURCE. UPON STARTUP OF BACKUP GENERATOR, WAIT 30 SECONDS TO POWER ON CRAC UNITS AND ASSOCIATED ACCU. AFTER 120 SECONDS, POWER ON AC-1. AFTER 360 SECONDS, POWER ON ALL OTHER MECHANICAL EQUIPMENT.

STATE OF OHIO
GREGORY HINTE
E-87905
4/28/09
REGISTERED
PROFESSIONAL ENGINEER

MARK	DESCRIPTION	DATE

DESIGNED BY: C. KORPASH
DRAWN BY: E. LEW
CHECKED BY: J. TEETER
SUBMITTED BY: D. PEARSON
SIZE: ANSI D
ISSUE DATE: MAY 2026
ANG PROJECT NO.: PBXP22050
CONTRACT NO.: FA8803-21-D-0008
TASK ORDER NO.: W56HRZ-3P0009

OHIO AIR NATIONAL GUARD
MANSFIELD LAHM AIR NATIONAL GUARD BASE, OH

JACOBS GOVERNMENT SERVICES
2600 MICHELSON SR, STE 500
IRVINE, CA 92612

MANSFIELD LAHM AIR NATIONAL GUARD BASE, OH
REPAIR B403 FOR CYBER
FA877006
MECHANICAL CONTROLS COVER

SHEET ID
M-607

POINT NAME	HARDWARE... AI	AO	BI	BO	SOFTWARE POINTS AV	BV	LOOP	SCHED	TREND	ALARM	SHOW ON GRAPHIC
ZONE TEMP	X								X		X
ZONE SETPOINT ADJUST	X										X
AIRFLOW	X								X		X
DISCHARGE AIR TEMP	X								X		X
ZONE DAMPER		X									X

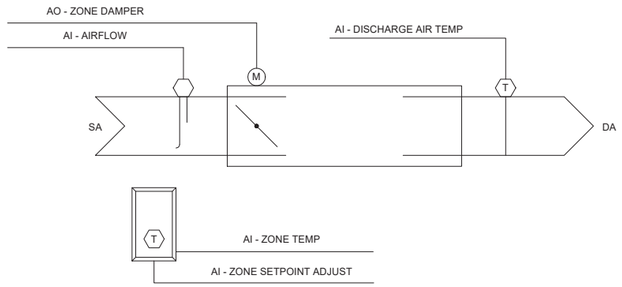

D1 VAV TERMINAL UNIT (VAV 1 THRU 9)
SCALE NTS

SEQUENCE OF OPERATION:

RUN CONDITIONS - SCHEDULED:
THE VAV BOX SHALL RUN ACCORDING TO A USER DEFINABLE TIME SCHEDULE IN THE FOLLOWING MODES:
- OCCUPIED MODE: THE UNIT SHALL MAINTAIN
  - A 78°F (ADJ.) COOLING SETPOINT
  - A 68°F (ADJ.) HEATING SETPOINT.
- UNOCCUPIED MODE (NIGHT SETBACK): THE UNIT SHALL MAINTAIN
  - A 85°F (ADJ.) COOLING SETPOINT.
  - A 55°F (ADJ.) HEATING SETPOINT.

ALARMS SHALL BE PROVIDED AS FOLLOWS:
- HIGH ZONE TEMP: IF THE ZONE TEMPERATURE IS GREATER THAN THE COOLING SETPOINT BY A USER DEFINABLE AMOUNT (ADJ.).
- LOW ZONE TEMP: IF THE ZONE TEMPERATURE IS LESS THAN THE HEATING SETPOINT BY A USER DEFINABLE AMOUNT (ADJ.).

ZONE SETPOINT ADJUST:
THE OCCUPANT SHALL BE ABLE TO ADJUST THE ZONE TEMPERATURE HEATING AND COOLING SETPOINTS AT THE ZONE SENSOR.

VARIABLE VOLUME TERMINAL UNIT - FLOW CONTROL:
THE UNIT SHALL MAINTAIN ZONE SETPOINTS BY CONTROLLING THE AIRFLOW THROUGH ONE OF THE FOLLOWING:

OCCUPIED:
- WHEN ZONE TEMPERATURE IS GREATER THAN ITS COOLING SETPOINT, THE ZONE DAMPER SHALL MODULATE BETWEEN THE MINIMUM OCCUPIED AIRFLOW (ADJ.) AND THE MAXIMUM COOLING AIRFLOW (ADJ.) UNTIL THE ZONE IS SATISFIED.
- WHEN THE ZONE TEMPERATURE IS BETWEEN THE COOLING SETPOINT AND THE HEATING SETPOINT, THE ZONE DAMPER SHALL MAINTAIN THE MINIMUM REQUIRED ZONE VENTILATION (ADJ.).
- WHEN ZONE TEMPERATURE IS LESS THAN ITS HEATING SETPOINT, IF WARM AIR IS AVAILABLE FROM THE HP, THE ZONE DAMPER SHALL MODULATE BETWEEN THE MINIMUM OCCUPIED AIRFLOW (ADJ.) AND THE MAXIMUM HEATING AIRFLOW (ADJ.) UNTIL THE ZONE IS SATISFIED.

UNOCCUPIED:
- WHEN THE ZONE IS UNOCCUPIED THE ZONE DAMPER SHALL CONTROL TO ITS MINIMUM UNOCCUPIED AIRFLOW (ADJ.).
- WHEN THE ZONE TEMPERATURE IS GREATER THAN ITS COOLING SETPOINT, THE ZONE DAMPER SHALL MODULATE BETWEEN THE MINIMUM UNOCCUPIED AIRFLOW (ADJ.) AND THE MAXIMUM COOLING AIRFLOW (ADJ.) UNTIL THE ZONE IS SATISFIED.
- WHEN ZONE TEMPERATURE IS LESS THAN ITS UNOCCUPIED HEATING SETPOINT, IF WARM AIR IS AVAILABLE FROM THE GAS-FIRED AC UNIT, THE ZONE DAMPER SHALL MODULATE BETWEEN THE MINIMUM UNOCCUPIED AIRFLOW (ADJ.) AND THE HEATING AIRFLOW (ADJ.) UNTIL THE ZONE IS SATISFIED.

DISCHARGE AIR TEMPERATURE:
THE CONTROLLER SHALL MONITOR THE DISCHARGE AIR TEMPERATURE.

ALARMS SHALL BE PROVIDED AS FOLLOWS:
- HIGH DISCHARGE AIR TEMP: IF THE DISCHARGE AIR TEMPERATURE IS GREATER THAN 120°F (ADJ.).
- LOW DISCHARGE AIR TEMP: IF THE DISCHARGE AIR TEMPERATURE IS LESS THAN 40°F (ADJ.).

EMERGENCY SHUTOFF SWITCH SEQUENCE OF OPERATION:

AIR DISTRIBUTION EMERGENCY SHUT OFF SWITCHES WILL DE-ENERGIZE AIR HANDLING EQUIPMENT INCLUDING EXHAUST FANS AND GRADE MOUNTED UNITS AND CLOSE ASSOCIATED LOW LEAKAGE CONTROL DAMPERS. SYSTEM RESET WILL BE AVAILABLE AT THE FRONT END. CRAC UNITS DO NOT REQUIRE SHUT DOWN.

EQUIPMENT TO BE SHUT DOWN:
AC-1 & MOTORIZED LOW LEAKAGE DAMPER INTEGRAL TO UNIT
EF-1 & MOTORIZED DAMPER

EQUIPMENT THAT IS NOT SHUT DOWN:
CRAC UNITS (CRAC 1-8)
SPLIT SYSTEM HP (FC-1&2)
UNIT HEATERS (UH-1,2,&3)
VAV BOXES
EXHAUST FANS FOR SMOKE (EF-2,3,&4)

LEAK DETECTION CONTROLLER CONTROLS

THE BAS WILL MONITOR THE LEAK DETECTION CONTROLLER FOR ALARMS AND PROVIDE AN ALARM AT THE FRONT END WORK STATION.

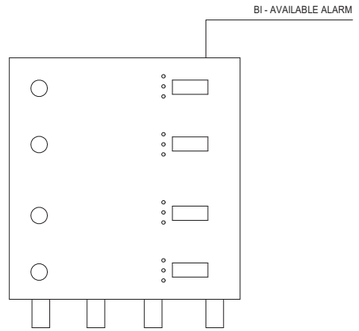

D8 LEAK DETECTION CONTROLLER CONTROLS
SCALE NTS

SEQUENCE OF OPERATION:

SPLIT SYSTEM DX FAN COIL UNITS (WITH HEAT PUMP):

FAN COIL UNITS WILL BE CONTROLLED BY MANUFACTURER PROVIDED THERMOSTATS.

THE BAS WILL SEPARATELY MONITOR TEMPERATURE IN EACH ROOM SERVED BY THE FAN COIL UNIT.

ALARMS WILL BE PROVIDED AS FOLLOWS:
- HIGH SPACE TEMPERATURE
- LOW SPACE TEMPERATURE

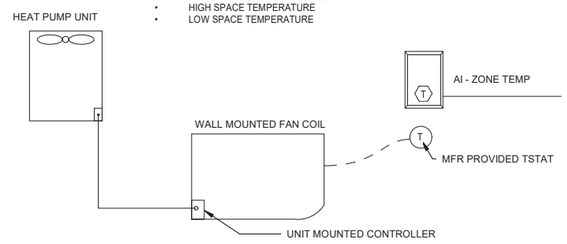

D7 SPLIT DX UNIT (FC-1&2)
SCALE NTS

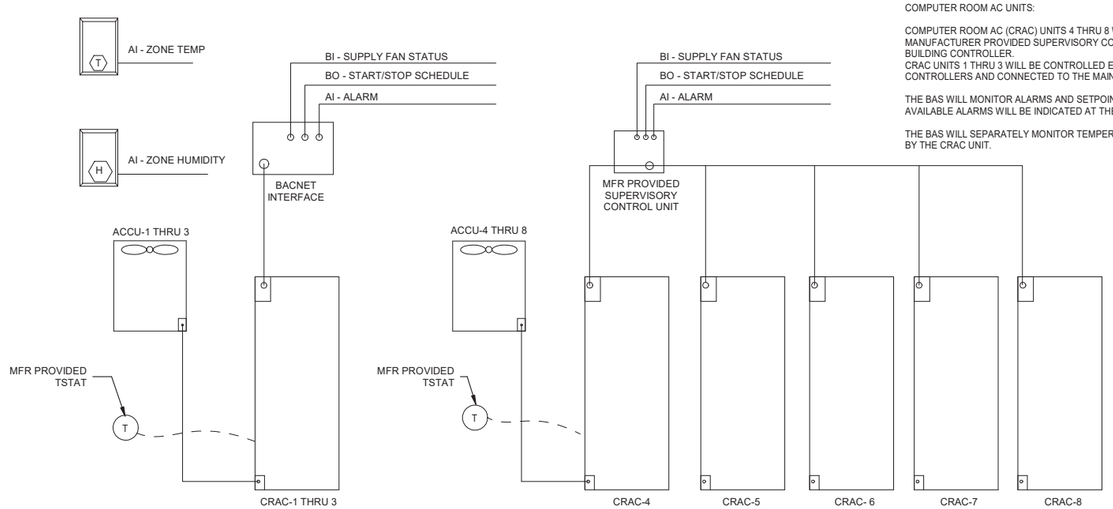

NOTES:
EACH CRAC UNIT SHALL BE PROVIDED WITH OWN ACCU AND MFR PROVIDED TSTAT.

E1 IN ROW CRAC UNIT (CRAC 1 THRU 8)
SCALE NTS

SEQUENCE OF OPERATION:

COMPUTER ROOM AC UNITS:

COMPUTER ROOM AC (CRAC) UNITS 4 THRU 8 WILL BE CONTROLLED ENTIRELY BY MANUFACTURER PROVIDED SUPERVISORY CONTROL UNITS AND CONNECTED TO THE MAIN BUILDING CONTROLLER.
CRAC UNITS 1 THRU 3 WILL BE CONTROLLED ENTIRELY BY MANUFACTURER PROVIDED CONTROLLERS AND CONNECTED TO THE MAIN BUILDING CONTROLLER.

THE BAS WILL MONITOR ALARMS AND SETPOINTS.
AVAILABLE ALARMS WILL BE INDICATED AT THE OPERATORS WORK STATION.

THE BAS WILL SEPARATELY MONITOR TEMPERATURE AND HUMIDITY IN EACH ROOM SERVED BY THE CRAC UNIT.

STATE OF OHIO
GREGORY HINTE
E-87905
4/28/09
REGISTERED
PROFESSIONAL ENGINEER

MARK	DESCRIPTION	DATE

DESIGNED BY: C. KORPASH
DRAWN BY: E. LEW
CHECKED BY: J. TEETER
SUBMITTED BY: PEARSON
SIZE: ANSI D
ISSUE DATE: MAY 2026
ANG PROJECT NO.: PBXP222050
CONTRACT NO.: FA8803-21-D-0008
TASK ORDER NO.: W56HRZ-3P0009

OHIO AIR NATIONAL GUARD
MANSFIELD LAHM AIR NATIONAL GUARD BASE, OH

JACOBS GOVERNMENT SERVICES
2600 MICHELSON SR, STE 500
IRVINE, CA 92612

MANSFIELD LAHM AIR NATIONAL GUARD BASE, OH
REPAIR B403 FOR CYBER
FA877006
MECHANICAL CONTROLS

SHEET ID
M-608

TYPE B-3 FINAL

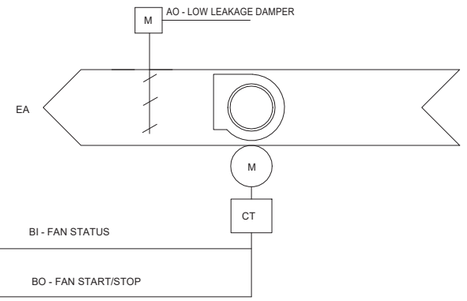

NOTE:
UNIT WILL DE-ENERGIZE AND THE OUTSIDE
AIR DAMPER WILL CLOSE ON EMERGENCY
AIR DISTRIBUTION SHUT DOWN

	HARDWARE POINTS				SOFTWARE POINTS						
POINT NAME	AI	AO	BI	BO	AV	BV	LOOP	SCHED	TREND	ALARM	SHOW ON GRAPHIC
EXHAUST AIR DAMPER STATUS			X						X		X
FAN STATUS			X						X		X
FAN START/STOP				X					X		X
EXHAUST AIR DAMPER				X					X		X
SCHEDULE								X			X
EXHAUST AIR DAMPER FAILURE										X	
EXHAUST AIR DAMPER IN HAND										X	
FAN FAILURE										X	
FAN IN HAND										X	
FAN RUNTIME EXCEEDED										X	

SEQUENCE OF OPERATION:

RUN CONDITIONS - SCHEDULED:
THE EXHAUST FAN SHALL RUN ACCORDING TO A USER DEFINABLE SCHEDULE. 7AM - 6 PM (ADJ)

FAN:
THE FAN MUST HAVE A USER DEFINABLE (ADJ.) MINIMUM RUNTIME.

EXHAUST AIR DAMPER:
THE EXHAUST AIR DAMPER SHALL OPEN ANYTIME THE UNIT RUNS AND SHALL CLOSE ANYTIME THE UNIT STOPS. THE EXHAUST AIR DAMPER SHALL CLSOE 30 SEC (ADJ.) AFTER THE FAN STOPS OR IF THE EMERGENCY AIR DISTRIBUTION OFF BUTTON HAS BEEN DEPRESSED.
ALARMS SHALL BE PROVIDED AS FOLLOWS:
- DAMPER FAILURE: COMMANDED OPEN, BUT THE STATUS IS CLOSED.
- DAMPER IN HAND: COMMANDED CLOSED, BUT THE STATUS IS OPEN.

DAMPER STATUS:
THE FAN SHALL BE ENABLED AFTER THE DAMPER STATUS HAS PROVEN.

FAN STATUS:
THE CONTROLLER MUST MONITOR THE FAN STATUS.

ALARMS MUST BE PROVIDED AS FOLLOWS:
- FAN FAILURE: COMMANDED ON, BUT THE STATUS IS OFF.
- FAN IN HAND: COMMANDED OFF, BUT THE STATUS IS ON.
- FAN RUNTIME EXCEEDED: FAN STATUS RUNTIME EXCEEDS A USER DEFINABLE LIMIT (ADJ.).

SEQUENCE OF OPERATION

PER TRI-SERVICE FIRE PROTECTION ENGINEERING WORKING GROUP (TSFPEWG) GUIDE TSFPEWG G 3-600-01.01-18 DATED 25 FEBRUARY 2021 WITH CHANGE 1, 21 APRIL 2021, THE FIRE ALARM SYSTEM WILL CONTROL THE SMOKE EXHAUST FANS. REFER TO FIRE ALARM DRAWINGS FOR CONTROL OF THESE FANS.

FOR MAKE UP AIR TO EACH LAB OR TEF SPACE:

THE DDC SYSTEM WILL MONITOR THE MANUAL ACTIVATION SWITCHES PROVIDED BY FIRE ALARM TO CONTROL THE OPERATION OF THE EXHAUST FANS.

LAB A, B & C ON ACTIVATION OF THE SMOKE CONTROL SYSTEM THE FOLLOWING WILL HAPPEN:

AC-1 WILL BE ENABLED AND THE SUPPLY FAN WILL BE OVERRIDEN TO MAX AIRFLOW

THE VAV BOX SERVING THE LAB OR TEF ROOM WILL BE OVERRIDEN TO FULLY OPEN. THE SMOKE FIRE DAMPER DOWNSTREAM OF THE VAV BOX WILL BE OVERRIDEN OPEN. THE SMOKE FIRE DAMPER DOWNSTREAM OF THE RETURN GRILL WILL BE CLOSED.

THE MIN OUTSIDE AIR AT AC-1 WILL INCREASE TO 1300 CFM TO PROVIDE MAKE UP AIR TO THE EXHAUST FAN

AC-1 WILL CONTINUE TO OPERATE UNDER ITS ONBOARD CONTROLLER MAINTAINING SET POINT

WHEN THE MANUAL ACTIVATION SWITCH IS TURNED OFF, THE HVAC SYSTEM WILL RETURN TO NORMAL OPERATION

TEF
ON ACTIVATION OF THE SMOKE CONTROL SYSTEM THE FOLLOWING WILL HAPPEN:

AC-1 WILL BE ENABLED AND THE SUPPLY FAN WILL BE OVERRIDEN TO MAX AIRFLOW

VAV-7 WILL BE OVER RIDDEN TO FULLY OPEN. THE SMOKE FIRE DAMPER IN THE TRANSFER OPENING WILL BE OVERRIDEN OPEN.

THE MIN OUTSIDE AIR AT AC-1 WILL INCREASE TO 1300 CFM TO PROVIDE MAKE UP AIR TO THE EXHAUST FAN

AC-1 WILL CONTINUE TO OPERATE UNDER ITS ONBOARD CONTROLLER MAINTAINING SET POINT

WHEN THE MANUAL ACTIVATION SWITCH IS TURNED OFF, THE HVAC SYSTEM WILL RETURN TO NORMAL OPERATION

THESE FANS WILL NOT BE SUBJECT TO EMERGENCY SHUT OFF PER UFC 4-010-01

D8 SMOKE EXHAUST FANS (EF-2 THRU 5)
SCALE NTS

D1 EXHAUST FAN (EF-1)
SCALE NTS

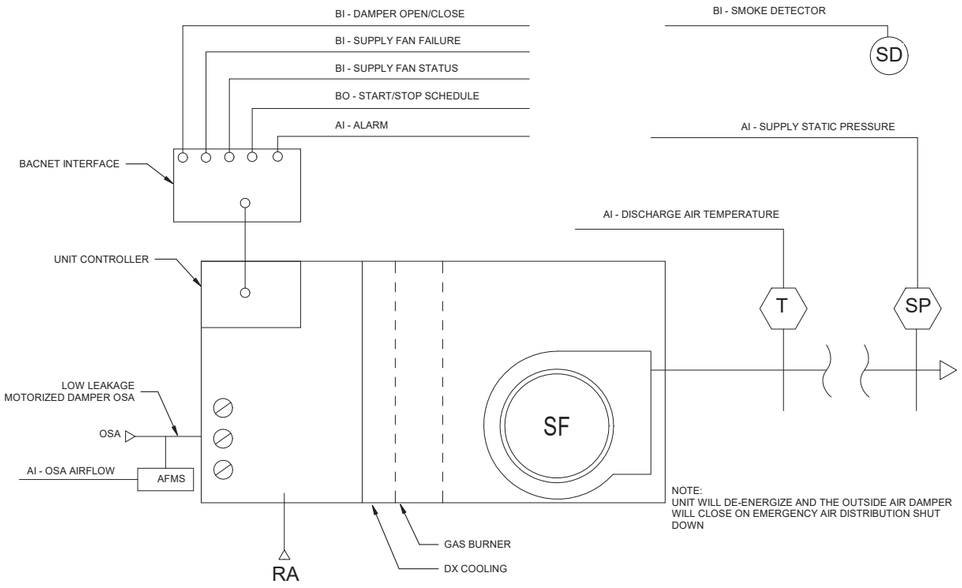

NOTE:
UNIT WILL DE-ENERGIZE AND THE OUTSIDE AIR DAMPER WILL CLOSE ON EMERGENCY AIR DISTRIBUTION SHUT DOWN

	HARDWARE POINTS				SOFTWARE POINTS						
POINT NAME	AI	AO	BI	BO	AV	BV	LOOP	SCHED	TREND	ALARM	SHOW ON GRAPHIC
ZONE TEMP	X								X		X
ZONE SETPOINT ADJUST	X										X
MIXED AIR TEMP	X								X		X
RETURN AIR TEMP	X								X		X
SUPPLY AIR TEMP	X								X		X
RETURN AIR SMOKE DETECTOR			X						X	X	X
SUPPLY FAN STATUS			X						X		X
SUPPLY FAN START/STOP				X					X		X
COOLING STAGE 1				X					X		X
COOLING STAGE 2				X					X		X
COOLING STAGE 3				X					X		X
COOLING STAGE 4				X					X		X
OUTSIDE AIR DAMPERS				X							X
SCHEDULE								X			
HEATING SETPOINT									X		X
COOLING SETPOINT									X		X
HIGH ZONE TEMP										X	
LOW ZONE TEMP										X	
SUPPLY FAN FAILURE										X	
SUPPLY FAN IN HAND										X	
SUPPLY FAN RUNTIME EXCEEDED										X	
HIGH MIXED AIR TEMP										X	
LOW MIXED AIR TEMP										X	
HIGH RETURN AIR TEMP										X	
LOW RETURN AIR TEMP										X	
HIGH SUPPLY AIR TEMP										X	
SUPPLY STATIC PRESSURE	X										X

MORNING WARM-UP - THE DDC SYSTEM SHALL AUTOMICALLY START THE AC UNIT PRIOR TO THE OCCUPANCY SCHEDULE START TIME TO PERFORM A MORNING WARM-UP. DURING THIS PERIOD OF OPERATION THE OUTDOOR AIR DAMPER SHALL REMAIN CLOSED AS THE DDC SYSTEM TEMPORARILY CHANGES THE SETPOINT TO 0 CFM OUTDOOR AIR DURING MORNING WARM-UP. THE AC UNIT SHALL DISCHARGE 96F (ADJ) SUPPLY AIR AND EACH TERMINAL UNIT SHALL OPERATE IN OCCUPIED MODE. THE AC UNITS START TIME SHALL LINEARLY RESET BASED ON OUTDOOR AIR TEMPERATURE PER THE FOLLOWING RESET SCHEDULE; AT 60F (ADJ) THE AC UNIT SHALL START 15 MINUTES (ADJ) PRIOR TO THE OCCUPIED.

MORNING COOL-DOWN - THE DDC SYSTEM SHALL AUTOMATICALLY START THE AC UNIT 1/2 HOUR (ADJ) PRIOR TO THE OCCUPANCY SCHEDULE START TIME TO PERFORM A MORNING COOL-DOWN. DURING THIS PERIOD OF OPERATION THE OUTDOOR AIR DAMPER SHALL REMAIN CLOSED AS THE DDC SYSTEM TEMPORARILY CHANGES THE SETPOINT TO 0 CFM OUTDOOR AIR DURING MORNING COOL-DOWN. DURING MORNING COOL-DOWN, THE AC UNIT SHALL DISCHARGE 55F (ADJ) SUPPLY AIR AND EACH TERMINAL UNIT SHALL OPERATE IN OCCUPIED MODE.

SEQUENCE OF OPERATION:

AC-1 WILL RUN VIA ITS INTERNAL ONBOARD CONTROLLER. THE DDC SYSTEM WILL MONITOR ALL AVAILABLE POINTS AND WILL PICK UP AND DISPLAY ALARMS. PROVIDE ENABLE AND TEMP SETPOINT ADJUST THRU THE FRONT END. THE SUPPLY FAN RUNS CONTINUOUSLY. THE OUTDOOR AIR DAMPER MODULATES AS REQUIRED TO MAINTAIN MINIMUM OUTDOOR AIR SETPOINT. OUTDOOR AIR AIRFLOW IS MEASURED AND CONTROLLED TO MAINTAIN MINIMUM OUTDOOR AIR DURING OCCUPIED MODE. THE UNIT IS CONTROLLED AS FOLLOWS:
- THE UNIT CONTROLLER SHALL DETERMINE THE DISCHARGE AIR TEMPERATURE CONTROL POINT, AND SHALL UTILIZE THE UNIT MOUNTED OUTDOOR AIR TEMPERATURE SENSOR.
- SUPPLY AIR TEMPERATURE RESET SCHEDULE IS ADJUSTABLE AT THE DDC SYSTEM HEAD END.
- THE UNIT NATURAL GAS BURNER SECTION MODULATES AS REQUIRED TO MAINTAIN DISCHARGE AIR TEMPERATURE.
- THE UNIT HAS TWO OR MORE REFRIGERANT COMPRESSORS. THE CONTROLLER SHALL VARY COMPRESSOR SPEED AS REQUIRED TO MAINTAIN DISCHARGE AIR CONTROL POINT.
- THE UNIT CONTROLLER SHALL OPERATE THE SUPPLY FAN VARIABLE FREQUENCY DRIVE AND VARY THE SPEED OF THE SUPPLY FAN TO MAINTAIN DISCHARGE STATIC PRESSURE SETPOINT. THESUPPLY AIR DUCT STATIC PRESSURE SHALL BE MAINTAINED AT 1.5" WC (ADJ) MEASURED DOWNSTREAM OF THE SUPPLY FAN DISCHARGE, LOCATION SELECTED BY THE CONTROLS CONTRACTOR. SUPPLY FAN MOTOR SPEED SHALL NOT FALL BELOW 40% RATED SPEED, AND SHALL NOT EXCEED 100% RATED SPEED.
- THE OUTSIDE AIR DAMPER SHALL MAINTAIN A MINIMUM POSITION (ADJ.) DURING BUILDING OCCUPIED HOURS AND BE CLOSED DURING UNOCCUPIED HOURS.
- THE OUTSIDE AIR DAMPER SHALL CLOSE ON INPUT FROM THE EMERGENCY AIR DISTRIBUTION OFF SWITCH.

SUPPLY AIR TEMPERATURE SETPOINT:
THE CONTROLLER SHALL MONITOR THE SUPPLY AIR TEMPERATURE AND SHALL MAINTAIN A SUPPLY AIR TEMPERATURE SETPOINT BASED ON ZONE COOLING AND HEATING REQUIREMENTS.
THE SUPPLY AIR TEMPERATURE SETPOINT SHALL BE RESET FOR COOLING BASED ON ZONE COOLING REQUIREMENTS AS FOLLOWS:
- THE INITIAL SUPPLY AIR TEMPERATURE SETPOINT SHALL BE 57°F (ADJ.)
- AS COOLING DEMAND INCREASES, THE SETPOINT SHALL INCREMENTALLY RESET DOWN TO A MINIMUM OF 55°F (ADJ.)
- AS COOLING DEMAND DECREASES, THE SETPOINT SHALL INCREMENTALLY RESET UP TO A MAXIMUM OF 72°F (ADJ.)
- IF MORE ZONES NEED HEATING THAN COOLING, THEN THE SUPPLY AIR TEMPERATURE SETPOINT SHALL BE RESET FOR HEATING AS FOLLOWS:
- THE INITIAL SUPPLY AIR TEMPERATURE SETPOINT SHALL BE 82°F (ADJ.)
- AS HEATING DEMAND INCREASES, THE SETPOINT SHALL INCREMENTALLY RESET UP TO A MAXIMUM OF 89°F (ADJ.)
- AS HEATING DEMAND DECREASES, THE SETPOINT SHALL INCREMENTALLY RESET DOWN TO A MINIMUM OF 72°F (ADJ.)

DUCT SMOKE DETECTOR, SUPPLIED AND INSTALLED BY OTHERS, SHALL BE INSTALLED IN THE RETURN AIR DUCT DOWNSTREAM OF ALL RA INTAKE DUCT BRANCHES. UPON ACTIVATION, THE DETECTOR SHALL AUTOMATICALLY SHUT-DOWN AC-1. AC-1 SHALL AUTOMICALLY RESTART AFTER THE FIRE ALARM SYSTEM HAS BEEN RESET.

ALARMS SHALL BE PROVIDED AS FOLLOWS:
- HIGH RETURN AIR TEMP: IF THE RETURN AIR TEMPERATURE IS GREATER THAN 90F (ADJ.)
- LOW RETURN AIR TEMP: IF THE RETURN AIR TEMPERATURE IS LESS THAN 45F (ADJ.)

SUPPLY AIR TEMPERATURE:
THE CONTROLLER SHALL MONITOR THE SUPPLY AIR TEMPERATURE.

A1 GRADE MOUNTED AC UNIT (AC-1)
SCALE NTS

STATE OF OHIO
GREGORY HINTE
E-87905
4/28/26
REGISTERED
PROFESSIONAL ENGINEER

MARK	DESCRIPTION	DATE

ISSUE DATE: MAY 2026
ANG PROJECT NO.: PBXP222050
CONTRACT NO.: FA8903-21-D-0008
TASK ORDER NO.: W56SRZ-3F0009

DESIGNED BY: C. KORPASH
DRAWN BY: E. LEW
CHECKED BY: J. TEETER
SUBMITTED BY: D. PEARSON
SIZE: ANSI D

OHIO AIR NATIONAL GUARD
MANSFIELD LAHM AIR NATIONAL GUARD BASE, OH

JACOBS GOVERNMENT SERVICES
2600 MICHELSON SR. STE 500
IRVINE, CA 92612

MANSFIELD LAHM AIR NATIONAL GUARD BASE, OH
REPAIR B403 FOR CYBER
FA877006
MECHANICAL CONTROLS

SHEET ID
M-609

TYPE B-3 FINAL

GENERAL NOTES

A. DESIGN CRITERIA: 2023 NATIONAL ELECTRICAL CODE.

B. ALL ELECTRICAL FIXTURES AND EQUIPMENT THAT ARE LOCATED OVERHEAD INSIDE BUILDINGS AND WEIGH 31 LBS OR MORE MUST BE SEISMICALLY BRACED. ALL SUPPORTS AND MOUNTING HARDWARE MUST RESIST 0.5 TIMES THE EQUIPMENT WEIGHT IN ANY DIRECTION AND 1.5 TIMES THE EQUIPMENT WEIGHT IN THE DOWNWARD DIRECTION (UFC 4-010-01).

C. ALL ELECTRICAL WORK AND MATERIAL IS NEW AND MUST BE PROVIDED BY THE CONTRACTOR UNLESS OTHERWISE NOTED.

D. ALL ELECTRICAL WORK MUST BE PERFORMED IN A NEAT WORKMANSHIP MANNER AS DEFINED BY THE NATIONAL ELECTRICAL CONTRACTORS ASSOCIATION (NECA 1).

E. CONSTRUCTION DETAILS SHOWN ON THE DETAIL DRAWINGS SHOW TYPICAL INSTALLATION, UNLESS OTHERWISE NOTED AND APPLY TO ELECTRICAL WORK EVEN THOUGH NOT SPECIFICALLY REFERENCED ON THE PLAN DRAWINGS.

F. ELECTRICAL RACEWAY AND OUTLETS ARE SHOWN DIAGRAMMATICALLY. LOCATIONS ARE APPROXIMATE UNLESS DIMENSIONED. FIELD COORDINATE WORK WITH ARCHITECTURAL, MECHANICAL, TELECOMMUNICATIONS AND OTHER TRADES AS NECESSARY TO ELIMINATE CONFLICTS AND TO PROVIDE A CODE COMPLIANT INSTALLATION.

G. WORK MUST COMPLY WITH THE SPECIFICATIONS.

H. FURNISH AND INSTALL CONDUITS, MANHOLES, HANDHOLES, PULL BOXES, WIREWAY AND SUPPORTS WITH ACCESSORIES AS INDICATED ON THE DRAWINGS TO PROVIDE A COMPLETE AND FUNCTIONAL ELECTRICAL SYSTEM.

I. PROVIDE AND INSTALL FIRESTOP MATERIALS, INCLUDING MODULAR, RE-ENTERABLE FIRE STOPPING DEVICES CONTAINING SELF SEALING INTUMESCENT INSERTS AND MAINTAIN AN AIR LEAKAGE RATING OF LESS THAN 5 CFM/SF, (MEASURED AT AMBIENT AIR TEMPERATURE AND AT 400 DEG F) AT 0 TO 100 PERCENT VISUAL FILL PER SECTION 07 84 00, FIRE STOPPING. FOR PENETRATIONS THROUGH EXISTING AND NEW WALLS, FLOORS, AND CEILINGS. FOR WALL RATINGS, SEE ARCHITECTURAL DRAWINGS .

J. UNLESS OTHERWISE NOTED ELEVATIONS ARE TO DEVICE CENTERLINE.

K. FURNISH AND INSTALL ALL CONDUCTORS, TERMINATIONS, AND ACCESSORIES AS INDICATED ON THE DRAWINGS TO FORM A COMPLETE AND FUNCTIONAL SYSTEM.

L. INSTALL PULL STRINGS/PULL ROPES IN EMPTY CONDUITS. UNDERGROUND CONDUITS MUST BE CLEANED, DEBURRED, AND THEN CAPPED.

M. COORDINATE CEILING, WALL AND FLOOR PENETRATIONS WITH OTHER DISCIPLINES TO PREVENT CONFLICTS.

N. ELECTRICAL OUTLETS, DEVICES AND CONDUITS WITHIN THE SECURE AREA OR ON THE OUTSIDE WALL OF THE SECURE AREA MUST BE SURFACE MOUNTED.

O. THE CONTRACTOR MUST NOT PLACE CONDUITS IN CMU BLOCK CELLS CONTAINING VERTICAL REINFORCING STEEL.

P. ALL CONDUCTORS MUST BE ROUTED IN RACEWAYS SUITABLE FOR THE ENVIRONMENT INSTALLED UNLESS OTHERWISE NOTED.

Q. DRAWINGS INDICATE THE EXTENT OF HAZARDOUS OR WET LOCATIONS. INSTALLATION MEANS AND METHODS MUST BE SUITABLY RATED FOR THE ENVIRONMENT INDICATED ON THE DRAWINGS.

R. FOR CONDUITS AND RACEWAYS THROUGH WALL ASSEMBLIES, PENETRATIONS MUST BE TREATED TO MATCH THE STC RATING OF THE WALL. USE OVERSIZED SLEEVES FOR ALL CONDUIT AND CONDUCTOR PENETRATIONS THROUGH SOUND OR FIRE RATED WALLS. ANNULAR SPACE TO BE FILLED WITH SOUND OR FIRE SEALANT DEPENDENT ON THE WALL TYPE.

S. COORDINATE PLACEMENT OF PC AND MONITOR/TV/PROJECTOR RECEPTACLES WITH TELECOMMUNICATIONS OUTLETS TO ENSURE THAT BOTH ITEMS ARE CO-LOCATED.

T. AFTER END OF DUST GENERATING CONSTRUCTION ACTIVITIES, THE CONTRACTOR MUST CLEAN ALL LIGHT FIXTURES AND LENSES, ALL EQUIPMENT FILTERS, ENCLOSURES (INTERIOR AND EXTERIOR OF).

U. COORDINATE WITH MECHANICAL CONTRACTOR(S) TO ENSURE THAT MECHANICAL SYSTEMS ARE NOT INSTALLED ABOVE ELECTRICAL DISTRIBUTION EQUIPMENT.

V. VARIOUS SECURITY ZONES ARE IDENTIFIED FOR USE THROUGHOUT THIS FACILITY AS SHOWN ON DRAWINGS. ELECTRICAL DISTRIBUTION PANELS WITHIN EACH ZONE MUST ONLY BE USED TO SERVE EQUIPMENT IN THAT RESPECTIVE ZONE, UNLESS OTHERWISE NOTED. DO NOT CROSS SECURITY ZONES UNLESS SPECIFICALLY IDENTIFIED. ARCHITECTURAL DRAWINGS IDENTIFY THE STC RATINGS FOR ALL WALLS. CONDUIT AND DEVICE BOX PENETRATIONS IN SOUND RATED WALLS MUST BE MINIMIZED, AND WHERE REQUIRED, MUST BE TREATED TO MAINTAIN THE RATING OF THE ASSEMBLY. THOSE DEVICE BOXES MOUNTED ON OPPOSITE SIDES OF A RATED WALL MUST BE STAGGERED IN THE HORIZONTAL DIRECTION BY A MINIMUM OF 2'-0" CENTER TO CENTER, MUST NOT SHARE THE SAME WALL STUD SPACE, AND MUST NOT MOUNTED BACK TO BACK IN ORDER TO MAINTAIN THE PARTITION STC RATING. CONDUITS ENTERING A SECURITY ZONE THROUGH A WALL MUST BE GROUPED TOGETHER AND LOCATED WHERE EASILY ACCESSIBLE ON THE SECURE SIDE OF THE WALL. LABEL CONDUITS PER DETAIL E4/E-504.

W. CONDUIT AND CONDUCTOR INFORMATION SHOWN PROVIDES THE MINIMUM REQUIREMENTS. WHERE THE CONTRACTOR ELECTS TO COMBINE CIRCUITS IN A COMMON RACEWAY THE CONTRACTOR MUST BE RESPONSIBLE IN RESIZING THE CONDUIT AND CONDUCTOR INFORMATION PER THE REQUIREMENTS OF THE NEC. COMMON NEUTRALS MUST NOT BE USED UNLESS NOTED OTHERWISE.

X. PROVIDE PERMANENT YELLOW AND BLACK STRIPING TAPE ON THE GROUND SHOWING THE NEC REQUIRED CLEARANCE IN FRONT OF ALL ELECTRICAL EQUIPMENT IN THE ELECTRICAL ROOM AND SERVER ROOMS. COORDINATE PRODUCT BEING INSTALLED WITH CONTRACTING OFFICER PRIOR TO INSTALLATION.

Y. PROVIDE GROMMETS FOR EACH INDIVIDUAL CONDUIT PENETRATING THE RAISED ACCESS FLOORING.CONDUIT HOLES MUST BE CUT IN A CLEAN, ORGANIZED MANNER.

Z. MOUNT RECEPTACLES AT COUNTERS 6" ABOVE TOP OF COUNTER UNLESS OTHERWISE NOTED.

DEMOLITION GENERAL NOTES

A. WHERE CIRCUITS SERVE DEVICES OR EQUIPMENT THAT ARE MARKED FOR DEMOLITION OR RELOCATION AND DEVICES OR EQUIPMENT THAT ARE MARKED TO REMAIN, MAINTAIN CIRCUIT CONTINUITY TO THE PORTION OF THE CIRCUIT REQUIRED TO REMAIN IN SERVICE.

B. REMOVE DEMOLISHED ELECTRICAL MATERIALS FROM THE SITE UNLESS OTHERWISE NOTED.

C. PATCH, REPAIR, AND PAINT HOLES AND DAMAGE CAUSED BY THE ELECTRICAL WORK TO MATCH THE ADJACENT AREA AND CONDITIONS. MAKE PATCHES SUCH THAT THE EXISTING PARTITIONS, FIRE, ACOUSTIC, RF, AND/OR FORCE PROTECTION RATINGS ARE MAINTAINED.

D. RETURN MATERIAL MARKED AS SALVAGED TO THE CONTRACTING OFFICER'S REPRESENTATIVE.

E. SAFEGUARD EQUIPMENT, DEVICES, WIRING, CONDUIT, AND RELATED COMPONENTS THAT ARE MAKED TO REMAIN FROM DAMAGE OR SERVICE INTERRUPTION. IF IT IS NECESSARY TO REMOVE OR RELOCATE COMPONENTS, TEMPORARILY OR OTHERWISE, ACQUIRE APPROVAL FROM THE COR PRIOR TO REMOVAL OR RELOCATION.

F. WHEN DEMOLISHING DEVICES AND EQUIPMENT, REMOVE ASSOCIATED WIRING, CONDUIT, BOXES, HANGERS, AND APPURTENANCES BACK TO THE SOURCE UNLESS OTHERWISE NOTED. LABEL CIRCUIT BREAKERS NO LONGER IN USE AS "SPARE" AND SWITCH TO THE OFF POSITION. MAINTAIN SERVICE AND CIRCUIT CONTINUITY TO REMAINING DEVICES AND EQUIPMENT WITHIN AND OUTSIDE THE AREA OF WORK THROUGHOUT THE DURATION OF WORK. PROVIDE TEMPORARY POWER TO SUPPORT EXISTING TO REMAIN CIRCUITS AS REQUIRED TO MINIMIZE OUTAGES. INSTALL TEMPORARY SOURCES PRIOR TO DE-ENERGIZATION OF EQUIPMENT OR DEVICES SCHEDULED FOR DEMOLITION.

G. WHERE CONDUIT AND BOXES ARE CONCEALED IN INACCESSIBLE FINISHES OR IN SURFACES NOT OTHERWISE AFFECTED BY THE WORK, THEY MAY BE ABANDONED IN PLACE AFTER THE DEVICES AND WIRING HAVE BEEN DEMOLISHED. CUT EMBEDDED CONDUIT 12-INCHES FROM THE SURFACE, CAP, AND LABEL AS "EMPTY". PROVIDE COVER PLATES ON ABANDONED BOXES.

H. MANDRILL THEN CLEAN THE INTERIOR OF EXISTING CONDUITS THAT ARE TO BE REUSED.

I. VERIFY CIRCUITS SERVING DEVICES AND EQUIPMENT MARKED AS DEMOLISHED OR RELOCATED.

LABELING REQUIREMENTS OF ELECTRICAL SYSTEMS

A. LABEL ELECTRICAL CONDUITS. LABELS MUST BE LOCATED AT EACH WALL PENETRATIONS AND INCLUDE THE TO, FROM, VOLTAGE AND CIRCUIT NUMBER. PROVIDE METAL TAGS MADE OF BRASS OR ALUMINUM, 51MM BY 51MM BY 1.3MM, WITH STAMPED LEGEND, PUNCHED FOR USE WITH SELF-LOCKING CABLE TIE FASTENER.

B. FOR POWER AND CONTROL WIRING, COMPLY WITH ANSI A13.1 FOR MINIMUM SIZE OF LETTERS FOR LEGEND AND FOR MINIMUM LENGTH OF COLOR FIELD FOR EACH RACEWAY AND CABLE SIZE. PROVIDE SLEEVE OF PERMANENT, PVC, YELLOW OR WHITE, WITH LEGIBLE MACHINE-PRINTED BLACK MARKINGS.

C. PROVIDE CONDUCTOR IDENTIFICATION MATERIALS THAT ARE COLORED, SELF-ADHESIVE VINYL TAPE NOT LESS THAN 0.08MM (3 MILS) THICK BY 25MM TO 51MM WIDE.

D. LABEL EACH CONDUCTOR WITHIN ELECTRICAL EQUIPMENT ENCLOSURES AND JUNCTION BOX. LABEL MUST INCLUDE THE TO, FROM, VOLTAGE, AND CIRCUIT NUMBER.

RF SHEILDING GROUNDING REQUIREMENTS

A. PRIOR TO INSTALLING ANY RF SHIELDING IN THE BUILDING, TEST THE RESTISTANCE OF EVERY METAL STUD WITHIN THE SECURE BOUNDARY. GROUND RESISTANCE MEASURED AT EACH STUD MUST MEASURE NO HIGHER THAN 1 OHM. IF THE GROUND RESISTANCE MEASURES GREATER THAN 1 OHM AT ANY METAL STUDS, DOCUMENT THE LOCATIONS AND REPORT THE FINDINGS TO THE CONTRACTING OFFICER.

B. COORDINATE WITH MANUFACTURER OF RF SHIELDING MATERIAL TO DETERMINE THE BEST MEANS AND TESTING EQUIPMENT FOR TESTING THE GROUND RESISTANCE AT METAL STUDS.

C. FOLLOW RF SHIELDING MANUFACTURER'S REQUIREMENTS FOR BONDING METAL PLATING ALONG FLOOR TO THE WALL-MOUNTED RF SHIELDING.

D. MEET THE REQUIREMENTS DEFINED IN DETAIL E1/E-504, THE ARCHITECTURAL DRAWINGS AND SPECIFICATIONS FOR EACH CONDUIT PENETRATION THROUGH THE RF SHIELDING.

ABBREVIATIONS

ABBREVIATION	DESCRIPTION
A	AMPERE, AUTOMATIC
AASD	AIR ASPIRATING SMOKE DETECTOR
ABV	ABOVE
AC	ALTERNATING CURRENT
ACC	ACCESS
ACS	ACCESS CONTROL SYSTEM
ACSR	ALUMINUM CONDUCTOR STEEL-REINFORCED
ADB	ACCESS CONTROL DISTRIBUTION BOX
ADJ	ADJUSTABLE
ADS	ASPIRATING SMOKE DETECTOR
AF	AMPERE FRAME
AFD	ADJUSTABLE FREQUENCY DRIVE
AFF	ABOVE FINISHED FLOOR
AFG	ABOVE FINISHED GRADE
AHJ	AUTHORITY HAVING JURISDICTION
AHU	AIR HANDLING UNIT
AL	ALUMINUM
AM	AMMETER
ANN	ANNUNCIATOR
ANT	ANTENNA
APPROX	APPROXIMATE
ASU	AIR SUPPLY UNIT
AT	AMPERE TRIP
ATC	AUTOMATIC TRANSFER CONTROL
ATS	AUTOMATIC TRANSFER SWITCH
AUTO	AUTOMATIC
AUX	AUXILIARY
AWG	AMERICAN WIRE GAGE
BAT	BATTERY
BC	BARE COPPER
BIL	BASIC IMPULSE LEVEL
BIM	BREAKER INTERFACE MAODULE
BKR	BREAKER
BLDG	BUILDING
BLR	BOILER
BMS	BALANCED MAGNETIC SWITCH
BOT	BOTTOM
C	CONDUIT, CONTACTOR, CONDUCTOR, CLOSE, CENTIGRADE
CB	CIRCUIT BREAKER
CC	CONTROL CABLE
CE	CONFORMITE EUROEENNE
CF/CI	CONTRACTOR FURNISHED, CONTRACTOR INSTALLED
CKT	CIRCUIT
CLG	CEILING
COMM	COMMUNICATIONS
CONT	CONTINUE
COR	CONTRACTING OFFICER OR REPRESENTATIVE
CP	CONTROL PANEL
CPT	CONTROL POWER TRANSFORMER
CPU	CENTRAL PROCESSING UNIT
CR	CARD READER
CS	CONTROL STATION
CT	CURRENT TRANSFORMER, CABLE TRAY
CU	COPPER CONDUCTOR
D	DURESS BUTTON
DC	DIRECT CURRENT, DATA CENTER
DIV	DIVISION
DN	DOWN
DP	DISTRIBUTION PANEL
DPDT	DOUBLE-POLE DOUBLE-THROW
DPM	DIGITAL POWER METER
DPST	DOUBLE-POLE SINGLE-THROW
DR	DOOR RELEASE
DS	ELECTRIC DOOR STRIKE
DSC	DISCONNECT
E	EMPTY
EA	EACH
EDH	ELECTRIC DUCT HEATER
EF	EXHAUST FAN
EL	ELEVATION
EMT	ELECTRICAL METALLIC TUBING
ENCL	ENCLOSURE
EO	ELECTRICALLY OPERATED, ELECTRIC OPERATOR
EP	EXPLOSION-PROOF
EQPT	EQUIPMENT
ES	ETHERNET SWITCH / ELECTRONIC STRIKE / SOLENOID
ETM	ELAPSED TIME METER
EUH	ELECTRIC UNIT HEATER
EUSERC	ELECTRIC UTILITY SERVICE EQUIPMENT REQUIREMENTS COMMITTEE
EXH	EXHAUST
EXST	EXISTING
F	FORWARD, FREQ
FA	FIRE ALARM
FACP	FIRE ALARM CONTROL PANEL
FACU	FIRE ALARM CONTROL UNIT
FB	FLOOR BOX
FDB	FIELD DISTRIBUTION BOX
FDR	FEEDER
FF	FINISHED FLOOR
FLEX	FLEXIBLE CONDUIT
FLR	FLOOR
FLUOR	FLUORESCENT
FMCP	COMBINATION FIRE ALARM/MASS NOTICFICATION CONTROL PANEL
FMSP	FIRE ALARM/MASS NOTICFICATION SECURE PANEL
FO	FIBER OPTIC
FOV	FIELD OF VIEW
FP	FIELD PANEL
FREQ	FREQUENCY
FSCP	FIRE SUPPRESSION CONTROL PANEL
FU	FUSE
FVNR	FULL VOLTAGE NON-REVERSING
FVR	FULL VOLTAGE REVERSING
FWD	FORWARD
G	GROUND, GREEN
GALV	GALVANIZED
GEN	GENERATOR
GF/CI	GOVERNMENT FURNISHED, CONTRACTOR INSTALLED
GF/GI	GOVERNMENT FURNISHED, GOVERNMENT INSTALLED
GFCI	GROUND FAULT CIRCUIT INTERRUPTER

ABBREVIATIONS

ABBREVIATION	DESCRIPTION
GFR	GROUND FAULT RELAY
GND	GROUND
GP	GENERAL PURPOSE POWER
GRS	GALVANIZED RIGID STEEL CONDUIT
H	HIGH SPEED
HGT	HEIGHT
HH	HANDHOLE
HID	HIGH INTENSITY DISCHARGE
HOA	HAND-OFF-AUTO
HOR	HAND-OFF-REMOTE
HP	HORSEPOWER
HPS	HIGH PRESSURE SODIUM
HS	HAND SWITCH
HSS	HIGH SECURITY SWITCH
HV	HIGH VOLTAGE
HVAC	HEATING, VENTILATING & AIR CONDITIONING
HZ	HERTZ
IAW	IN ACCORDANCE WITH
IC	INTERRUPTING CAPACITY
IDS	INTRUSION DETECTION SYSTEM
IMC	INTERMEDIATE METALLIC CONDUIT
INCAND	INCANDESCENT
J,JB	JUNCTION BOX
K	KEY INTERLOCK
KA	KILOAMPERES
KAIC	KILOAMPERES INTERRUPTING CAPACITY
KCM	THOUSAND CIRCULAR MILS
KV	KILOVOLTS
KVA	KILOVOLT AMPERES
KW	KILOWATTS
KWH	KILOWATT HOURS
L	LIGHTING CONTACTOR, LOW SPEED, LOWER
LA	LIGHTNING ARRESTER
LB	LOAD BANK
LC	LIGHTING CONTROLLER, LATCH COIL, LIGHTING CONTACTOR
LCP	LOCAL CONTROL PANEL
LOR	LOCAL-OFF-REMOTE
LP	LIGHTING PANEL
LPS	LIGHTNING PROTECTION SYSTEM
LR	LOCAL/REMOTE
LS	LIMIT SWITCH, LEVEL SWITCH
LTF	LIQUID-TIGHT FLEX CONDUIT
M	MAGNETIC CONTACTOR COIL, MOTOR, MANUAL
MA	MILLIAMPERE
MAN	MANUAL
MAU	MAKE-UP AIR UNIT
MAX	MAXIMUM
MCC	MOTOR CONTROL CENTER
MCR	MISSION COMMUNICATIONS ROOM, DATA CENTER
MECH	MECHANICAL
MFR	MANUFACTURER
MH	MANHOLE, METAL HALIDE, MOUNTING HEIGHT
MIN	MINIMUM
MOV	METAL OXIDE VARISTOR
MPC	MINI POWER CENTER
MS	MOTOR STARTER
MSC	MANUFACTURER SUPPLIED CABLE
MT	MOUNT
MTD	MOUNTED
MTS	MANUAL TRANSFER SWITCH
MV	MEDIUM VOLTAGE
MVA	MEGA-VOLT AMPERES
N	NEUTRAL, NORMAL
N.C.	NORMALLY CLOSED
N.O.	NORMALLY OPEN
NEUT	NEUTRAL
NIC	NOT IN CONTRACT
NP	NAMEPLATE
NTS	NOT TO SCALE
O	OPEN
OCA	OPEN-CLOSE-AUTO
OHM	OHMMETER
OL	OVERLOAD RELAY
OO	ON-OFF
OOA	ON-OFF-AUTO
OOR	ON-OFF-REMOTE
OS	OCCUPANCY SENSOR
PB	PULL BOX
PC	PHOTOCELL, PERSONAL COMPUTER
PCB	POWER CIRCUIT BREAKER
PCC	POINT OF COMMON COUPLING
PDB	POWER SUPPLY DISTRIBUTION BOX
PDU	POWER DISTRIBUTION UNIT
PF	POWER FACTOR
PH	PHASE
PMS	PAD MOUNTED SWITCH
PNL	PANEL
POT	POTENTIOMETER
PP	POWER PACK
PS	PRESSURE SWITCH
PT	POTENTIAL TRANSFORMER
PVC	POLYVINYL CHLORIDE
PWR	POWER
R	RELAY, REVERSE, RUN, RAISE, RED
RCPT	RECEPTACLE
REM	REMOTE
REQD	REQUIRED
RGS	RIGID GALVANIZED STEEL CONDUIT
RPM	REVOLUTIONS PER MINUTE
RTE	REQUEST TO EXIT
RVNR	REDUCED VOLTAGE NON-REVERSING
RVR	REDUCED VOLTAGE REVERSING
S/N	SOLID NEUTRAL
SA	SURGE ARRESTER
SC	SPEED CONTROL
SEC	SECURE
SF	SUPPLY FAN
SH	SPACE HEATER
SMA	SOUND MASKING SYSTEM AMPLIFIER
SOL	SOLENOID

ABBREVIATIONS

ABBREVIATION	DESCRIPTION
SP	SPARE
SPD	SURGE PROTECTIVE DEVICE
SS	START STOP
SSS	SOLID STATE STARTER
SST	STAINLESS STEEL
ST	SHUNT TRIP
SUB	SUBSTATION
SW	SWITCH
SWBD	SWITCHBOARD
SWGR	SWITCHGEAR
SYMM	SYMMETRICAL
T	THERMOSTAT, TRANSFORMER
TB	TERMINAL BOARD, TEST BLOCK
TD	TEMPERATURE DETECTOR, TIME DELAY
TDC	TIME-DELAY CLOSING
TDO	TIME-DELAY OPENING
TDR	TIME DELAY RELAY
TEL	TELEPHONE
TEMP	TEMPERATURE
THS	TEMPERATURE/HUMIDITY SENSOR
TJB	TERMINAL JUNCTION BOX
TP	TEMPERATURE SENSOR
TS	TAMPER SWITCH
TSK	TOUCH SCREEN KEYPAD
TSP	TWISTED SHIELDED PAIR
TX	TRANSFORMER, TRANSMIT
TYP	TYPICAL
UC	UNLATCH COIL
UG	UNDERGROUND
UH	UNIT HEATER
UON	UNLESS OTHERWISE NOTED
UPP	UPS POWER PANEL
UPS	UNINTERRUPTIBLE POWER SUPPLY
UVR	UNDER VOLTAGE RELAY
V	VOLTAGE, VOLTS
VFD	VARIABLE FREQUENCY DRIVE
VM	VOLTMETER
VR	VOLTAGE REGULATOR
VS	VOLTMETER SWITCH
VSC	SEC/ACC CONTROLLER
W	WATTS
WH	WATER HEATER
WM	WATTMETER
WP	WEATHERPROOF
WS	WALL SENSOR
XFMR	TRANSFORMER
Z	IMPEDANCE
ZB	ZONE BOX

STATE OF OHIO
MARK OSSANNA
PE.93786
REGISTERED
PROFESSIONAL ENGINEER

MARK	DESCRIPTION	DATE

DESIGNED BY: M. OSSANNA
DRAWN BY: K. LONBECK
CHECKED BY: B. MITAROTONDA
SUBMITTED BY: S. PEARSON
DATE: ISSUE DATE: MAY 2026
ANSI D
ANG PROJECT NO.: PBXP22030
CONTRACT NO.: FA8803-21-D-0008
TASK ORDER NO.: W56SBR23F0009

OHIO AIR NATIONAL GUARD
MANSFIELD LAHM AIR NATIONAL GUARD BASE, OH

JACOBS GOVERNMENT SERVICES
2600 MICHELSON SR, STE 500
IRVINE, CA 92612

MANSFIELD LAHM AIR NATIONAL GUARD BASE, OH
REPAIR B403 FOR CYBER
FA877006
ELECTRICAL GENERAL NOTES & ABBREVIATIONS

SHEET ID
E-001

ELECTRICAL SYMBOLS

CONNECTION POINT MADE BY ELECTRICAL CONTRACTOR, TO EQUIPMENT SPECIFIED, OR PROVIDED BY GOVERNMENT OR OTHER DISCIPLINES. RACEWAY, CONDUCTOR AND CONNECTION SPECIFIED IN DIVISION 26 AND 28. COORDINATE FINAL CONNECTION REQUIREMENTS WITH EQUIPMENT SUPPLIER.

MCC-A — MAJOR ELECTRICAL COMPONENT OR DEVICE - NAME OR IDENTIFYING SYMBOL AS SHOWN.

BRANCH CIRCUIT PANELBOARD, FLUSH MOUNTED

BRANCH CIRCUIT PANELBOARD, SURFACE MOUNTED

M — MOTOR CONNECTION, SQUIRREL CAGE INDUCTION, HORSEPOWER AS SCHEDULED, (M) SHOWN ON PLANS

A — LUMINAIRE, SEE SCHEDULE.

A — LUMINAIRE, SEE SCHEDULE.

A — PENDANT LUMINAIRE, SEE SCHEDULE.

A — BAFFLE LUMINAIRE, SEE SCHEDULE.

A — DECORATIVE LUMINAIRE, SEE SCHEDULE.

X OR X — DOT OR CROSS HATCH IN LUMINAIRE INDICATES INTEGRAL EMERGENCY DRIVER/BATTERY PACK. WHERE X INDICATES LUMINAIRE TYPE CALLED OUT ON THE LUMINAIRE SCHEDULE.

LUMINAIRE AND POLE, SEE SCHEDULE.

WALL MOUNTED LUMINAIRE, SEE SCHEDULE.

EXIT LIGHTS, SEE SCHEDULE.

$a or A1 (2a) — LOWER CASE LETTER AT SWITCH AND LUMINAIRE INDICATES SWITCHING. LETTER/NUMBER NEXT TO LUMINAIRE INDICATES LUMINAIRE TYPE. NUMBER IN PARENTHESIS AT LUMINAIRE INDICATES CIRCUIT IN PANELBOARD.

(2) — HOME RUN - CIRCUIT DESTINATION SHOWN

or G — WIRING (CONDUIT AND CONDUCTORS UON) IN WALLS OR ABOVE CEILING, CONCEALED UON.

or G — UNDERGROUND / IN FLOOR CONDUIT AND CONDUCTORS.

NOTE:

MOST BRANCH CIRCUIT WIRING IS NOT SHOWN. INSTALLER MUST DEVISE SPECIFIC WIRING RUNS AS REQUIRED TO PROVIDE THE CIRCUITING AS SHOWN. WEEKLY RECORD WIRING AS INSTALLED CONSISTENT WITH THIS LEGEND ON ELECTRICAL RECORD PLAN DRAWINGS. FOR REQUIREMENTS AND LIMITATIONS, SEE DETAILS AND SPECIFICATIONS. ALL UNMARKED BRANCH CIRCUITS CONSIST OF THREE 12 AWG CONDUCTORS, IN CONDUIT UON. RUNS MARKED WITH CROSS-HATCHES INDICATE NUMBER OF 12 AWG CONDUCTORS. CROSSHATCH WITH SUBSCRIPT "G" INDICATES GREEN WIRE. "IG" INDICATES ISOLATED GROUND. SIZE CONDUIT ACCORDING TO SPECIFICATIONS AND APPLICABLE CODE.

[ ] — CIRCUIT CALLOUT, [1*C,3#8,1#10G] CONDUIT AND CONDUCTOR SIZE AND NUMBER AS INDICATED. 2-[3*C,3-350 KCMIL, 1#1/0G EA]; INDICATES TWO CONDUITS, EACH WITH CONDUCTORS INDICATED.

CONDUIT DOWN

CONDUIT UP

CONDUIT, STUBBED AND CAPPED AS SHOWN

FLEXIBLE CONDUIT

G — DIRECT BURIED GROUND CONDUCTOR

E — NEW ELECTRICAL UNDERGROUND PRIMARY, CONCRETE ENCASED

E x — EXISTING ELECTRICAL UNDERGROUND PRIMARY

E — NEW ELECTRICAL OVERHEAD PRIMARY

E x — EXISTING ELECTRICAL OVERHEAD PRIMARY

ES — NEW ELECTRICAL UNDERGROUND SECONDARY, CONCRETE ENCASED

ES x — EXISTING ELECTRICAL UNDERGROUND SECONDARY

LP — LIGHTNING PROTECTION CONDUCTOR

NEW UNDERGROUND DUCTBANK, CONCRETE ENCASED

NEW UNDERGROUND DUCTBANK

ELECTRICAL SYMBOLS

DUCTBANK SECTION
NEW CONDUCTORS, TYPE AND SIZE AS INDICATED
SPARE DUCT, TYP
HEAVY LINE INDICATES BOTTOM OF DUCT

$ SWITCH:
- 2 - DOUBLE POLE
- 3 - THREE WAY
- 4 - FOUR WAY
- D - DIMMER
- 1 - THREE ZONE DAYLIGHT DIMMING SYSTEM

WALL SWITCH:
- LC - MOMENTARY CONTACT
- LV - LOW-VOLTAGE
- OC - OCC SENSOR
- P - PILOT LIGHT
- T - TIMER SWITCH
- WP - WEATHERPROOF

MOTOR SWITCH:
- M - MOTOR RATED TOGGLE SWITCH WITHOUT OVERLOADS
- MS - MANUAL MOTOR STARTER WITH OVERLOADS

$$ — DUAL SWITCH, FOR LUMINAIRES WITH STEP DIM OPTION. 100%, 50%, AND 0% OPERATION.

$OC — DUAL SWITCH WITH BUILT IN PASSIVE INFRARED OCCUPANCY SENSOR. SINGLE GANG, TWO-BUTTON DEVICE

D $OC — DIMMING SWITCH WITH BUILT IN PASSIVE INFRARED OCCUPANCY SENSOR

CS-X — LIGHTING CONTROL STATION. FOR TYPE OF CONTROL, SEE KEY NOTES ON PLAN DWGS.

O — OCCUPANCY SENSOR

D — DAYLIGHT SENSOR

PC — PHOTOCELL

CS — CONTROL STATION - MOUNT 48" AFF.

RECEPTACLE, NEMA 5-20 DUPLEX CONVENIENCE. REFER TO A-003 FOR RECEPTACLE HEIGHTS. CIRCUIT INFORMATION PROVIDED IN PARENTHESIS.
- CRE -CORROSION RESISTANT
- WP - WEATHERPROOF
- OC - OCCUPANCY SENSOR CONTROLLED

RECEPTACLE, NEMA 5-20 FOURPLEX. REFER TO A-003 FOR RECEPTACLE HEIGHTS. CIRCUIT INFORMATION PROVIDED IN PARENTHESIS.

SIMPLEX RECEPTACLE

RECEPTACLE WIREWAY

POWER STRIP WITH 12 SIMPLEX RECEPTACLES FED FROM 2 CIRCUITS AND AN 8-WIRE POWER CONNECTOR FOR CONNECTION TO THE UNDER FLOOR ZONE BOX. DEDICATED NEUTRALS.

CEILING LEVEL RECEPTACLE, NEMA 5-20.

L20R — RECEPTACLE, SPECIAL PURPOSE - NEMA CONFIGURATION AS NOTED.

RECEPTACLE, SPECIAL PURPOSE, FLOOR OR UNDERFLOOR APPLICATION, CONFIGURATION AS NOTED.

J — JUNCTION BOX OR CONDUIT FITTING.

FLOOR BOX WITH TWO NEMA 5-20 DUPLEX RECEPTACLE. CIRCUIT INFORMATION PROVIDED IN PARENTHESIS.

FLOOR BOX WITH ONE NEMA 5-20 DUPLEX RECEPTACLE. CIRCUIT INFORMATION PROVIDED IN PARENTHESIS.

CS — GENERAL CONTROL OR WIRING DEVICE. LETTER SYMBOLS OR ABBREVIATIONS INDICATE TYPE OF DEVICE.

EMERGENCY POWER OFF SWITCH. MUSHROOM HEAD PUSH BUTTON WITH HINGED CLEAR PLASTIC COVER, MOUNT 48" AFF. "POWER SHUT-OFF" NAMEPLATE

ELECTRICAL SYMBOLS

F — SYSTEMS FURNITURE CONNECTION. PROVIDE JUNCTION BOX WITH AN 8-WIRE HARNESS CONSISTING OF 3 CIRCUIT HOT CONDUCTORS, 3 DEDICATED NEUTRAL CONDUCTORS AND TWO GROUND CONDUCTORS. REFER TO INTERIOR DRAWINGS FOR ADDITIONAL INFORMATION.

PP — OCCUPANCY SENSING SYSTEM POWER PACK. POWER PACK AND LOW VOLTAGE CABLING TO SENSOR(S) ARE NOT SHOWN. WHERE EXPOSED OR INACCESSIBLY CONCEALED, PROVIDE CONDUIT FOR CABLE. MOUNT POWER PACK ON EXPOSED STRUCTURE OR ABOVE ACCESSIBLE SUSPENDED CEILING. SHOW POWER PACK AND LOW VOLTAGE CABLING ON RECORD DRAWINGS.

OCCUPANCY SENSOR, CEILING MOUNTED ULTRASONIC, LOW VOLTAGE UON ON PLANS, (OMNI-DIRECTIONAL).

PADMOUNTED TRANSFORMER, NEW

PADMOUNTED TRANSFORMER, EXISTING

T — DRY TYPE TRANSFORMER, NEW

G — ENGINE GENERATOR

H — HANDHOLE, NEW ELECTRICAL

H — HANDHOLE, EXISTING ELECTRICAL

MANHOLE, NEW ELECTRICAL, NAME (UNDERLINED) OR TYPE AS INDICATED

MANHOLE, EXISTING ELECTRICAL, NAME (UNDERLINED) OR TYPE AS INDICATED

P — PULLBOX, NEW ELECTRICAL

P — PULLBOX, EXISTING ELECTRICAL

LIGHTNING PROTECTION SYSTEM AIR TERMINAL

GROUND ROD

GROUND TEST WELL

GROUNDED BUS BAR

30 — NONFUSED DISCONNECT SWITCH, AMPERE RATING INDICATED, 3 POLE UNLESS INDICATED OTHERWISE.

MTS 100/3P — MANUAL TRANSFER SWITCH, AMPERE RATING AND NUMBER OF POLES AS INDICATED.

60 CB — ENCLOSED CIRCUIT BREAKER, INDIVIDUALLY MOUNTED, AMPERE RATING AS INDICATED, 3 POLE UNLESS INDICATED OTHERWISE.

60/40 — FUSED DISCONNECT SWITCH, AMPERE RATING INDICATED (60/40, 60 = SWITCH RATING: 40 = FUSE RATING) 3 POLE UNLESS INDICATED OTHERWISE.

30 — CONTACTOR, MAGNETIC, AND CURRENT RATING AS INDICATED.

30/3P L — LIGHTING CONTACTOR FOR NUMBER OF POLES, AND CURRENT RATING AS INDICATED, SEE CONTROL DIAGRAM.

STARTER MAGNETIC, SEE CONTROL DIAGRAM.

COMBINATION (FUSE OR CIRCUIT BREAKER AS INDICATED) MAGNETIC STARTER, SEE CONTROL DIAGRAM

VFD — VARIABLE FREQUENCY DRIVE

SSS — SOLID-STATE STARTER

DPM — DIGITAL POWER METER

XX — POWER MONITORING DEVICE THAT SUMMARIZES LOAD TYPES AT THE ASSOCIATED DIGITAL POWER METER. XX = LOAD TYPE DEFINED ON ONE-LINE DIAGRAM.

M — ELECTRICAL UTILITY METER

ELECTRICAL SYMBOLS

1 — MAGNETIC STARTER WITH NEMA SIZE INDICATED

800 LSIG — DRAWOUT CIRCUIT BREAKER, LOW VOLTAGE. CURRENT RATING INDICATED. LSIG DENOTES 9-FUNCTION ELECTRONIC TRIP WITH ADJUSTABLE LONG TIME, SHORT TIME, INSTANTANEOUS AND GROUND FAULT SETTINGS. 3-POLE UNLESS INDICATED OTHERWISE.

100/M — CIRCUIT BREAKER, MAGNETIC TRIP ONLY, 3 POLE UNLESS INDICATED OTHERWISE.

400 — CIRCUIT BREAKER, THERMAL MAGNETIC TRIP SHOWN, 3 POLE UNLESS INDICATED OTHERWISE. LSIG DENOTES 9-FUNCTION ELECTRONIC TRIP WITH ADJUSTABLE LONG TIME, SHORT TIME, INSTANTANEOUS AND GROUND FAULT SETTINGS. 100% DENOTES CONTINUOUS DUTY AT RATED TRIP.

100 — SWITCH - CURRENT RATING INDICATED, 3 POLE UNLESS INDICATED OTHERWISE.

225 — FUSE - RATING INDICATED

GROUND

120V or 120/240V 15 KVA, 1PH — TRANSFORMER, AS INDICATED

LIGHTNING ARRESTOR

LOAD BANK

LINE TYPE LEGEND

HEAVY DASHED LINE ON DEMOLITON SHEETS DENOTES ITEM TO BE DEMOLISHED.

HALF TONE LINE DENOTES ITEM TO REMAIN.

HEAVY LINE DENOTES WORK TO BE PERFORMED.

SECURE AREA BOUNDARY

CONTROLLED AREA BOUNDARY

STATE OF OHIO
MARK OSSANNA
PE.93786
REGISTERED
PROFESSIONAL ENGINEER

MARK	DESCRIPTION	DATE

ISSUE DATE:	MAY 2026
ANG PROJECT NO.:	PBXP22050
CONTRACT NO.:	FA8803-21-D-0008
TASK ORDER NO.:	W50S8R23F0009
DESIGNED BY:	M. OSSANNA
DRAWN BY:	K. LONBECK
CHECKED BY:	B. MITAROTONDA
SUBMITTED BY:	D. PEARSON
SIZE:	ANSI D

OHIO AIR NATIONAL GUARD
MANSFIELD LAHM AIR NATIONAL GUARD BASE, OH

JACOBS GOVERNMENT SERVICES
2600 MICHELSON SR, STE 500
IRVINE, CA 92612

MANSFIELD LAHM AIR NATIONAL GUARD BASE, OH
REPAIR B403 FOR CYBER
FA877006
ELECTRICAL LEGEND

SHEET ID
E-002

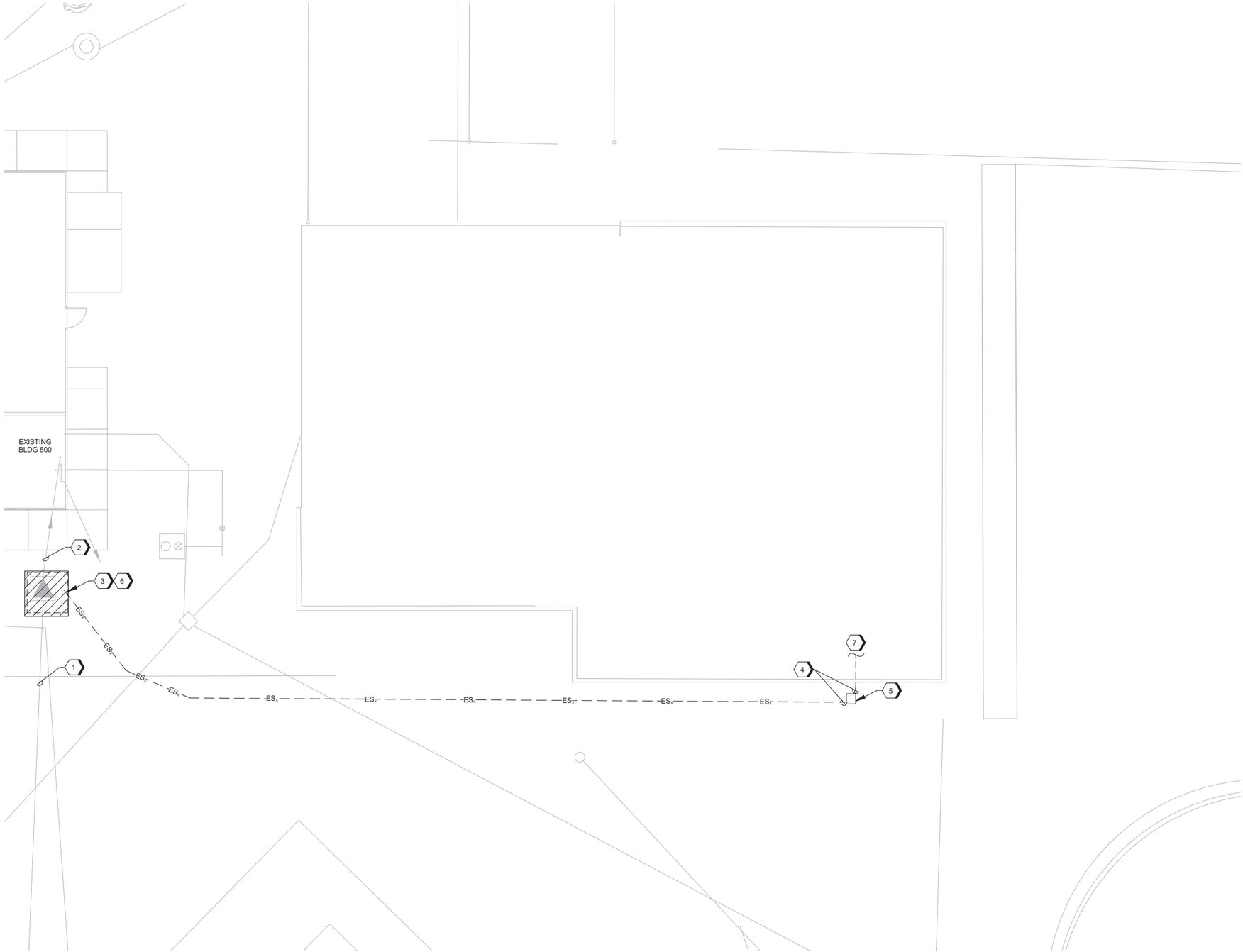

A1 ELECTRICAL SITE PLAN - DEMOLITION
SCALE 1/8" = 1'-0"

GENERAL SHEET NOTES

A. FIELD VERIFY EXISTING CONDITIONS PRIOR TO START OF WORK AND REPORT ANY CONFLICTS TO THE CONTRACTING OFFICER'S REPRESENTATIVE.

B. NOT ALL EXISTING ELECTRICAL EQUIPMENT, RECEPTACLES AND LIGHTING ARE SHOWN ON THIS DRAWING. FIELD VERIFY THE EXISTING CONDITIONS PRIOR TO BID.

C. COORDINATE POWER OUTAGES WITH THE CONTRACTING OFFICER A MINIMUM OF 30 DAYS IN ADVANCE OF THE OUTAGE.

(#) DEMOLITION KEYNOTES

1. PRESERVE AND PROTECT EXISTING 12.47KV UNDERGROUND PRIMARY FEEDER.
2. PRESERVE AND PROTECT EXISTING UNDERGROUND SECONDARY TO BUILDING 500.
3. DEMOLISH EXISTING 500KVA TRANSFORMER. PROVIDE SPILL PROTECTION FOR MINERAL OIL WHEN DEMOLISHING TRANSFORMER.
4. DEMOLISH EXISTING UNDERGROUND CONDUCTORS. CAP AND ABANDON CONDUIT IN PLACE OR DEMOLISH AS PART OF OTHER DEMOLITION WORK.
5. DEMOLISH EXISTING ELECTRICAL HANDHOLE.
6. DEMOLISH EXISTING TRANSFORMER CONCRETE PAD. PRESERVE AND PROTECT EXISTING PRIMARY CONDUITS AND CONDUCTORS ENTERING THE BOTTOM OF THE TRANSFORMER DURING DEMOLITION. DEMOLISH EXISTING SECONDARY CONDUITS AS REQUIRED FOR NEW TRANSFORMER.
7. REFER TO DRAWING E-401 FOR EQUIPMENT DEMOLITION REQUIRED IN THE ELECTRICAL ROOM.

GRAPHIC SCALE(S)

PLAN NORTH

0 4' 8' 16' 24'
SCALE: 1/8" = 1'-0"

STATE OF OHIO
MARK OSSANNA
PE.93786
REGISTERED
PROFESSIONAL ENGINEER

MARK	DESCRIPTION	DATE

DESIGNED BY: M. OSSANNA
DRAWN BY: K. LONBECK
CHECKED BY: B. MITAROTONDA
SUBMITTED BY: D. PEARSON
QTY: 1
SIZE: ANSI D
ISSUE DATE: MAY 2026
ANG PROJECT NO.: PBXP22050
CONTRACT NO.: FA8903-21-D-0008
TASK ORDER NO.: W50SBR23F0009

OHIO AIR NATIONAL GUARD
MANSFIELD LAHM AIR NATIONAL GUARD BASE, OH

JACOBS GOVERNMENT SERVICES
2600 MICHELSON SR, STE 500
IRVINE, CA 92812

MANSFIELD LAHM AIR NATIONAL GUARD BASE, OH
REPAIR B403 FOR CYBER
FA877006
ELECTRICAL SITE PLAN - DEMOLITION

SHEET ID
ED101

TYPE B-3 FINAL

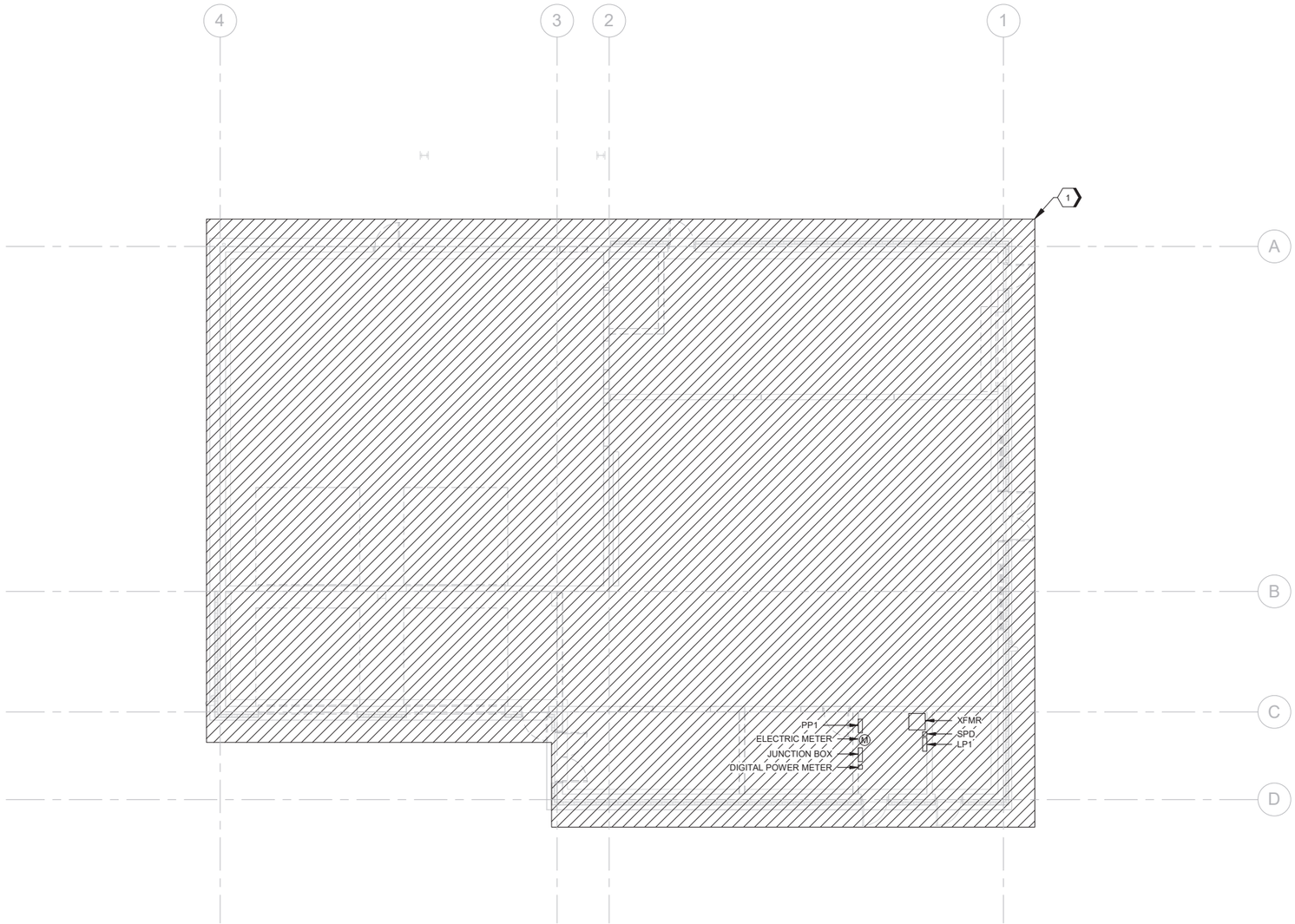

GENERAL SHEET NOTES

A. FIELD VERIFY EXISTING CONDITIONS PRIOR TO START OF WORK AND REPORT ANY CONFLICTS TO THE CONTRACTING OFFICER'S REPRESENTATIVE.

B. NOT ALL EXISTING ELECTRICAL EQUIPMENT, RECEPTACLES AND LIGHTING ARE SHOWN ON THIS DRAWING. FIELD VERIFY THE EXISTING CONDITIONS PRIOR TO BID.

C. COORDINATE POWER OUTAGES WITH THE CONTRACTING OFFICER A MINIMUM OF 30 DAYS IN ADVANCE OF THE OUTAGE.

(#) SHEET KEYNOTES

1. DEMOLISH EXISTING LIGHTING, ELECTRICAL EQUIPMENT, JUNCTION BOXES, CONDUITS, CONDUCTORS, SUPPORTS AND RECEPTACLES WITHIN THE BUILDING AND MOUNTED ON THE EXTERIOR OF THE BUILDING. NOT ALL EXISTING ELECTRICAL EQUIPMENT AND DEVICES ARE SHOWN ON THIS DRAWING.

GRAPHIC SCALE(S)

0 4' 8' 16' 24'

SCALE: 1/8" = 1'-0"

PLAN NORTH

A1 ELECTRICAL POWER PLAN - DEMOLITION

SCALE 1/8" = 1'-0"

STATE OF OHIO
MARK OSSANNA
PE.93786
REGISTERED
PROFESSIONAL ENGINEER

MARK	DESCRIPTION	DATE

DESIGNED BY: M. OSSANNA
DRAWN BY: K. LONBECK
CHECKED BY: B. MITAROTONDA
SUBMITTED BY: S. PEARSON
SIZE: ANSI D

ISSUE DATE: MAY 2026
ANG PROJECT NO.: PBXP222050
CONTRACT NO.: FA8903-21-D-0008
TASK ORDER NO.: W50S8R23F0009

OHIO AIR NATIONAL GUARD
MANSFIELD LAHM AIR NATIONAL GUARD BASE, OH

JACOBS GOVERNMENT SERVICES
2600 MICHELSON SR, STE 500
IRVINE, CA 92612

MANSFIELD LAHM AIR NATIONAL GUARD BASE, OH
REPAIR B403 FOR CYBER
FA877006
ELECTRICAL POWER PLAN - DEMOLITION

SHEET ID

ED102

TYPE B-3 FINAL

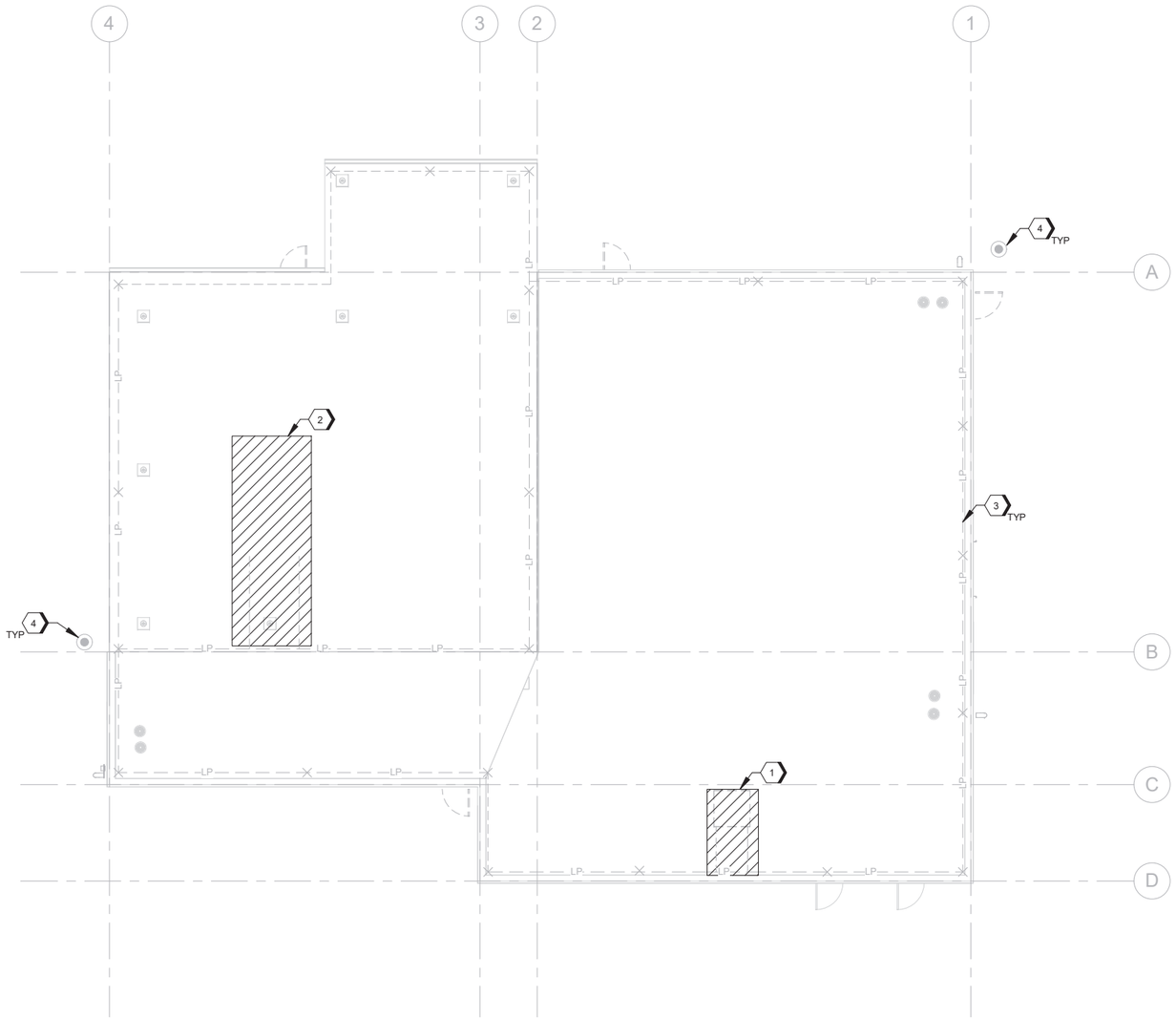

GENERAL SHEET NOTES

A. THE EXISTING BUILDING HAS LPS AIR TERMINALS AND CONDUCTORS ON THE ROOF THAT ARE SHOWN SCREENED ON THIS DRAWING. VERIFY EXISTING CONDITIONS AND REPORT ANY CONFLICTS TO THE CONTRACTING OFFICER PRIOR TO START OF WORK.

B. PROVIDE A THIRD-PARTY LPS INSPECTION AND TESTING OF THE EXISTING LPS SYSTEM TO REMAIN IN ACCORDANCE WITH NFPA 780 AND UFC 3-575-01. PROVIDE TEST RESULTS TO THE CONTRACTING OFFICER PRIOR TO SUBMITTING ON THE NEW LPS SYSTEM.

#SHEET KEYNOTES

1. DEMOLISH LPS CONNECTIONS TO ROOF HATCH.
2. DEMOLISH LPS AIR TERMINALS AND CONDUCTORS FOR EXISTING MECHANICAL EQUIPMENT.
3. EXISTING LPS SYSTEM TO REMAIN UNLESS OTHERWISE NOTED.
4. PRESERVER AND PROTECT EXISTING LIGHTNING PROTECTION TEST WELL.

A1 LIGHTNING PROTECTION PLAN - DEMOLITION
SCALE 1/8" = 1'-0"

GRAPHIC SCALE(S)

0 4' 8' 16' 24'
SCALE: 1/8" = 1'-0"

PLAN NORTH

STATE OF OHIO
MARK OSSANNA
PE.93786
REGISTERED
PROFESSIONAL ENGINEER

MARK	DESCRIPTION	DATE

DESIGNED BY: M. OSSANNA
DRAWN BY: K. LONBECK
CHECKED BY: B. MITAROTONDA
SUBMITTED BY: D. PEARSON
SIZE: ANSI D
ISSUE DATE: MAY 2026
ANG PROJECT NO.: PBXP22030
CONTRACT NO.: FA8903-21-D-0008
TASK ORDER NO.: W50S8R23F0009

OHIO AIR NATIONAL GUARD
MANSFIELD LAHM AIR NATIONAL GUARD BASE, OH

JACOBS GOVERNMENT SERVICES
2600 MICHELSON SR, STE 500
IRVINE, CA 92812

MANSFIELD LAHM AIR NATIONAL GUARD BASE, OH
REPAIR B403 FOR CYBER
FA877006
ELECTRICAL LIGHTNING PROTECTION PLAN - DEMOLITION

SHEET ID
ED103

TYPE B-3 FINAL

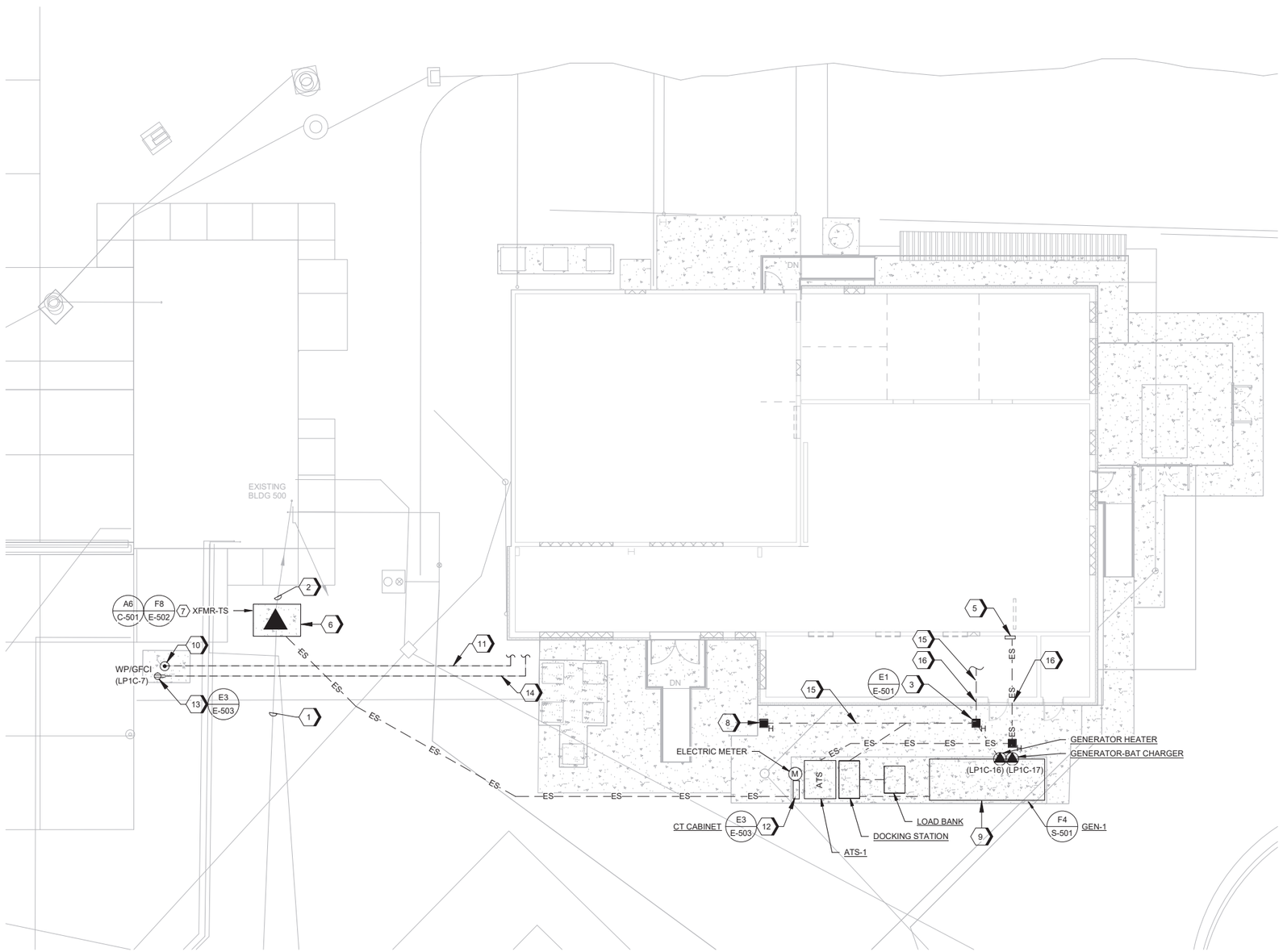

A1 ELECTRICAL SITE PLAN
SCALE 1" = 10'-0"

GENERAL SHEET NOTES

A. REFER TO THE ONE-LINE DIAGRAM FOR THE QUANTITY OF UNDERGROUND CONDUITS REQUIRED BETWEEN EACH PIECE OF ELECTRICAL EQUIPMENT ON THE SITE.

#SHEET KEYNOTES

1. CONNECT EXISTING UNDERGROUND UTILITY TO TRANSFORMER.
2. CONNECT EXISTING UNDERGROUND POWER LINE FOR EXISTING BUILDING 500 TO TRANSFORMER.
3. TYPE H-1 HANDHOLE.
4. NOT USED.
5. TO MAIN DISTRIBUTION PANEL, MDP-1.
6. FRONT OF TRANSFORMER.
7. PROVIDE CONCRETE PAD FOR TRANSFORMER.
8. PROVIDE DUCT BANK AND HANDHOLES FOR ROUTING HVAC FEEDERS TO THIS AREA. FEEDERS FOR ACCU UNITS MUST NOT BE ROUTED THRU THE SECURE AREA. COORDINATE ROUTING OF UNDERGROUND CONDUITS TO ACCU UNITS.
9. PROVIDE MANUAL STOP SWITCH IN NEMA 3R OR 4 RATED OUTDOOR ENCLOSURE MOUNTED ON THE EXTERIOR OF THE GENERATOR ENCLOSURE. ENCLOSURE MUST BE LABELED TO IDENTIFY AS GENERATOR REMOTE STOP.
10. PROVIDE GROUND TEST WELL NEXT TO ANTENNA CONCRETE PAD. COORDINATE FINAL LOCATION WITH CONTRACTING OFFICER'S REPRESENTATIVE.
11. BOND GROUND TEST WELL TO GROUND RING WITH #4/0 BARE COPPER CONDUCTOR. REFER TO DRAWING EG101 FOR GROUND RING LOCATION.
12. MOUNT CT CABINET AND METER BASE TO EQUIPMENT SUPPORT.
13. MOUNT RECEPTACLE TO EQUIPMENT PAD. EQUIPMENT SUPPORT MUST BE SIZED TO ALSO SUPPORT COMMUNICATIONS ENCLOSURE. REFER TO COMM DRAWINGS FOR ADDITIONAL INFORMATION.
14. PROVIDE [1"C, 2#10, 1#10] FROM NEW RECEPTACLE MOUNTED ON THE EXTERIOR OF THE BUILDING TO THE ANTENNA CONCRETE PAD.
15. PROVIDE THREE SPARE 1" CONDUITS IN DUCT BANK.
16. FOR UNDERGROUND CONDUIT PENETRATIONS INTO THE ELECTRICAL ROOM, REFER TO DRAWING E-401 FOR REQUIREMENTS OF PENETRATING THE STEM WALL.

GRAPHIC SCALE(S)

0 10' 20' 30'
SCALE: 1" = 10'-0"

PLAN NORTH

STATE OF OHIO
MARK OSSANNA
PE.93786
REGISTERED
PROFESSIONAL ENGINEER

MARK	DESCRIPTION	DATE

DESIGNED BY: M. OSSANNA
DRAWN BY: K. LONBECK
CHECKED BY: B. MITAROTONDA
SUBMITTED BY: S. PEARSON
QA/QC: ANSI D

ISSUE DATE: MAY 2026
ANG PROJECT NO.: PBXP22050
CONTRACT NO.: FA8903-21-D-0008
TASK ORDER NO.: W50S8R23F0009

OHIO AIR NATIONAL GUARD
MANSFIELD LAHM AIR NATIONAL GUARD BASE, OH

JACOBS GOVERNMENT SERVICES
2600 MICHELSON SR, STE 500
IRVINE, CA 92812

MANSFIELD LAHM AIR NATIONAL GUARD BASE, OH
REPAIR B403 FOR CYBER
FA877006
ELECTRICAL SITE PLAN

SHEET ID
ES101

TYPE B-3 FINAL

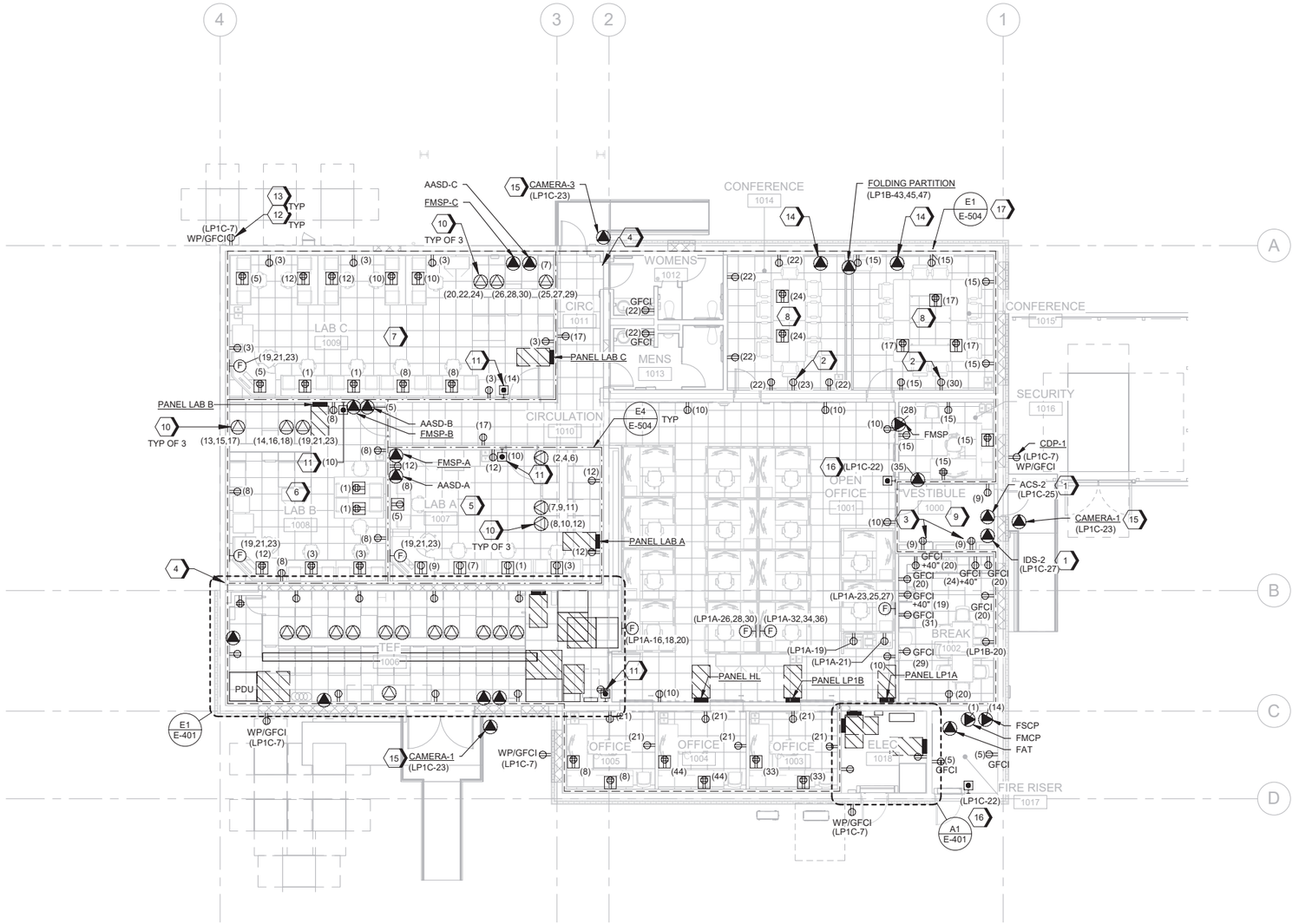

A1 POWER PLAN
SCALE 1/8" = 1'-0"

GENERAL SHEET NOTES

A. CIRCUIT NUMBERS AND SOURCE (WHERE APPLICABLE) ARE SHOWN ADJACENT TO DEVICES (IN PARENTHESES). USE THE TABLE BELOW TO DETERMINE CONDUCTOR SIZES FOR 20 AMP CIRCUITS UON.

CIRCUIT LENGTH	CONDUCTOR SIZE (AWG)
<75'-0"	#12
75'-0" TO 100'-0"	#10
>100'-0"	#8

B. COORDINATE AND CO-LOCATE WALL MOUNTED RECEPTACLE LOCATIONS WITH VOICE/DATA AND CATV DROPS SHOWN ON T-SERIES SHEETS.

C. SUPPLY POWER TO RECEPTACLES ON THIS SHEET FROM PANEL LP1B UNLESS OTHERWISE NOTED.

D. RECEPTACLES, SWITCHES, CONDUITS, JUNCTION BOXES AND OTHER DEVICES WITHIN SECURE AREA MUST BE SURFACE MOUNTED. NO RECESSED DEVICES IN SECURE AREA. PROVIDE CAST METAL, HUB-TYPE JUNCTION BOXES FOR SURFACE-MOUNTED DEVICES LOCATED BELOW 7'-0" AFF.

E. REFER TO INTERIORS DRAWINGS PRIOR TO ROUTING SURFACE MOUNTED CONDUIT IN THE SECURE AREAS TO ENSURE NO CONDUITS WILL BE ROUTED IN CONFLICT WITH THE WALL MOUNTED FINISHES.

#SHEET KEYNOTES

1. PROVIDE JUNCTION BOX BEHIND ENCLOSURE AND MOUNT DUPLEX RECEPTACLE INSIDE THE SECURITY ENCLOSURE AT 72" AFF. COORDINATE FINAL LOCATION WITH SECURITY CONTRACTOR PRIOR TO ROUGH-IN.
2. PROVIDE DEDICATED RECEPTACLE FOR TV/MONITOR. MOUNT RECEPTACLE AT 72" AFF AND CO-LOCATE WITH COMM DROP.
3. PROVIDE DEDICATED RECEPTACLE FOR CHARGING CELL PHONE LOCKER. SURFACE MOUNT RECEPTACLE 6" BELOW BOTTOM OF CELL PHONE LOCKER. COORDINATE FINAL LOCATION WITH CONTRACTING OFFICER'S REPRESENTATIVE PRIOR TO ROUGH IN.
4. BUILDING EXPANSION JOINT ALONG GRIDLINES 2 & B. PROVIDE CONDUIT EXPANSION/DEFLECTION FITTINGS FOR CONDUITS PASSING THRU THIS EXPANSION JOINT IN ACCORDANCE WITH DETAIL E6/E-501
5. SUPPLY POWER TO RECEPTACLES IN THIS ROOM FROM PANEL LAB A UNLESS OTHERWISE NOTED.
6. SUPPLY POWER TO RECEPTACLES IN THIS ROOM FROM PANEL LAB B UNLESS OTHERWISE NOTED.
7. SUPPLY POWER TO RECEPTACLES IN THIS ROOM FROM PANEL LAB C UNLESS OTHERWISE NOTED.
8. SUPPLY POWER TO RECEPTACLES IN THIS ROOM FROM PANEL LP1A UNLESS OTHERWISE NOTED.
9. SUPPLY POWER TO CIRCUITS IN THIS ROOM FROM PANEL LP1C UNLESS OTHERWISE NOTED. ROUTE FEEDER FROM ELECTRICAL ROOM TO VESTIBULE THROUGH THE UTILITY CORRIDOR ABOVE THE BREAK ROOM. REFER TO DETAIL A5/A-401 FOR ADDITIONAL INFORMATION ON UTILITY CORRIDOR.
10. SUPPLY POWER TO RECEPTACLE FROM PDU-1. PROVIDE A L14-60R RECEPTACLE AND [1"C, 4#6, 1#10G] TO PDU-1. MOUNT RECEPTACLE TO UNISTRUT 12" ABOVE COMMUNICATION RACK.
11. PROVIDE EPO SWITCH WITH CLEAR PLASTIC COVER. PROVIDE NAME PLATE WITH LABEL "EMERGENCY POWER OFF". WHEN ACTIVATED, EPO SWITCH MUST SHUT OFF POWER TO ALL SERVER RACKS AND HVAC EQUIPMENT WITHIN THE ROOM BY ACTIVATING THE THREE SHUNT TRIP BREAKERS IN PDU-1 ASSOCIATED WITH THE RACKS IN THIS LAB AND BY SIGNALING THE CRAC UNIT IN THIS ROOM TO SHUT DOWN. PROVIDE ALL CONDUITS AND WIRING NECESSARY BETWEEN THE EPO, PDU-1 AND CRAC UNIT FOR THIS FUNCTIONALITY. PROVIDE EPO WITH ENOUGH CONTACTS TO SHUT DOWN EACH PIECE OF EQUIPMENT NOTED AND ONE SPARE CONTACT.
12. SURFACE-MOUNT EXTERIOR RECEPTACLES AND CONDUITS ON EXTERIOR WALL.
13. FEEDERS FOR EXTERIOR RECEPTACLES MUST BE ROUTED OUTSIDE OF THE BUILDING AND MUST NOT BE ROUTED THROUGH THE SECURE AREA.
14. MOUNT FOLDING PARTITION TOUCHSCREEN THAT IS PROVIDED WITH EQUIPMENT ON EACH SIDE OF WALL. PROVIDE [3/4"C, 5#18] BETWEEN TOUCH SCREEN AND CONTROL BOX MOUNTED NEAR MOTORS.
15. PROVIDE [3/4"C, 2#12, 1#12G] FROM PANELBOARD IN ELECTRICAL ROOM. ROUTE CONDUIT THRU ELECTRICAL ROOM ROOF AND ACROSS THE ROOF TO THE CAMERA LOCATIONS. DO NOT PENETRATE THE SECURE AREA WALLS FOR ROUTING THIS FEEDER. ROOF PENETRATION MUST BE IN ACCORDANCE WITH DETAIL F2/A-501.
16. PROVIDE EPO BUTTON THAT WHEN DEPRESSED SHUNT TRIPS THE TWO UPS FEEDER BREAKERS IN MDP-1. PROVIDE NAMEPLATE ABOVE EPO BUTTON THAT READS "UPS TECHNICAL POWER SHUTDOWN. SHUNT TRIPS BREAKERS IN MDP-1." PROVIDE 3/4" CONDUIT AND 3#12 CONDUCTORS FROM EPO BUTTON TO CIRCUIT BREAKERS IN MDP-1.
17. CONDUIT PENETRATIONS THROUGH RF SHIELDING MUST MEET DETAIL E1/E-504 AND REQUIREMENTS PROVIDED IN ARCHITECTURAL DETAILS AND SPECIFICATIONS.

LEGEND

- – – – – – – – – SECURE AREA BOUNDARY
- —·—·—·—·— CONTROLLED AREA BOUNDARY

GRAPHIC SCALE(S)

8 6 4 2 0 8 16
SCALE: 1/8"=1'-0"

PLAN NORTH

STATE OF OHIO
MARK OSSANNA
PE.93786
REGISTERED
PROFESSIONAL ENGINEER

MARK	DESCRIPTION	DATE

DESIGNED BY: M. OSSANNA
DRAWN BY: K. LONBECK
CHECKED BY: B. MITAROTONDA
SUBMITTED BY: D. PETERSON
ANSI D

ISSUE DATE: MAY 2026
ANG PROJECT NO.: PBXP22050
CONTRACT NO.: FA8903-21-D-0008
TASK ORDER NO.: W50S8R23F0009

OHIO AIR NATIONAL GUARD
MANSFIELD LAHM AIR NATIONAL GUARD BASE, OH

JACOBS GOVERNMENT SERVICES
2600 MICHELSON SR, STE 500
IRVINE, CA 92612

MANSFIELD LAHM AIR NATIONAL GUARD BASE, OH
REPAIR B403 FOR CYBER
FA877006
ELECTRICAL POWER PLAN

SHEET ID
EP101

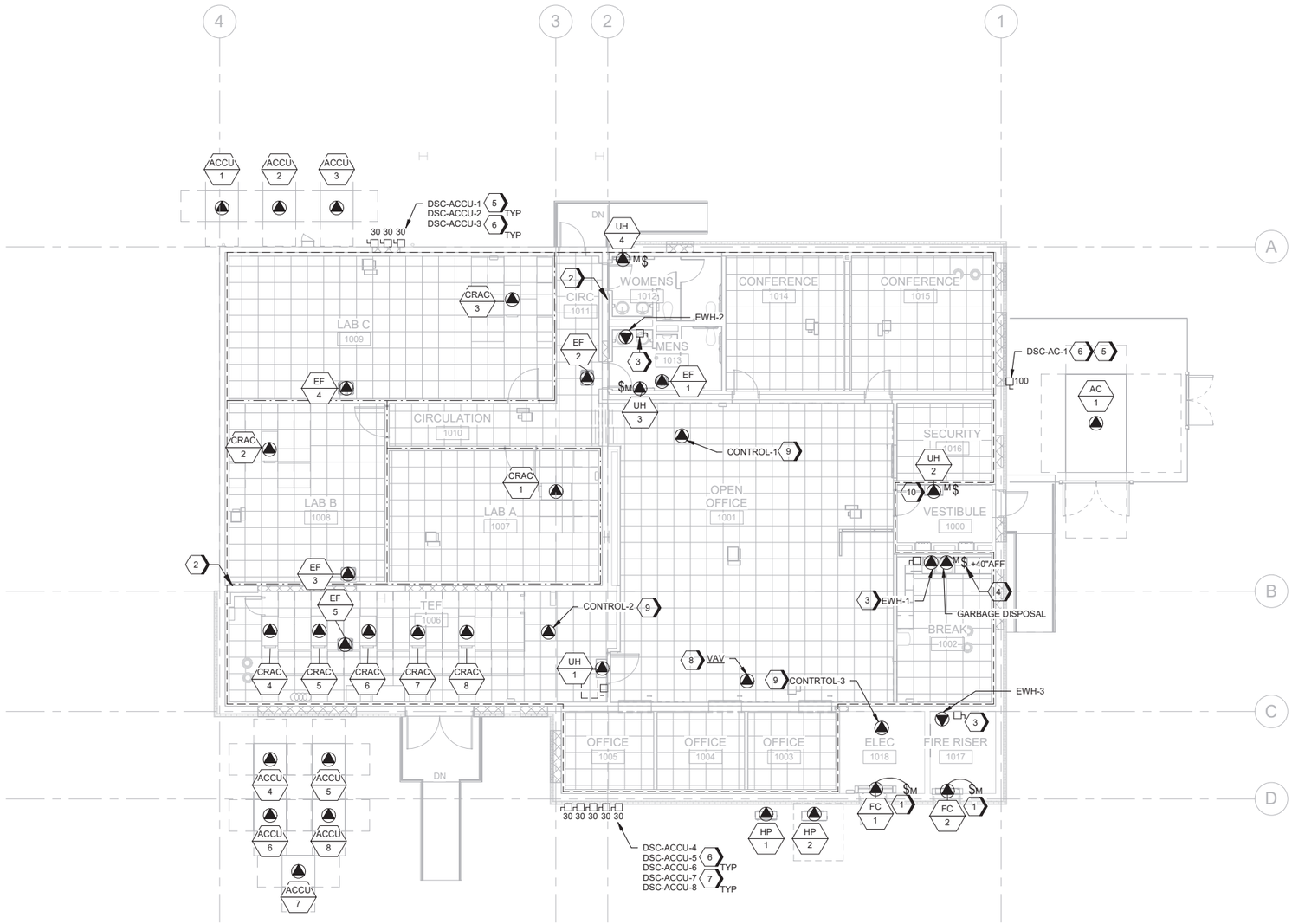

A1 POWER PLAN - MECHANICAL AND PLUMBING
SCALE 1/8" = 1'-0"

GENERAL SHEET NOTES

A. MECHANICAL EQUIPMENT IS SHOWN IN APPROXIMATE LOCATIONS, VERIFY LOCATION AND TERMINATION REQUIREMENTS PRIOR TO INSTALLATION OF CONDUIT AND CONDUCTORS.

B. FOR ADDITIONAL MECHANICAL EQUIPMENT CONECTION INFORMATION, REFER TO DRAWING E-610.

C. RECEPTACLES, SWITCHES, CONDUITS, JUNCTION BOXES AND OTHER DEVICES WITHIN SECURE AREA MUST BE SURFACE MOUNTED. NO RECESSED DEVICES IN SECURE AREA. PROVIDE CAST METAL, HUB-TYPE JUNCTION BOXES FOR SURFACE-MOUNTED DEVICES LOCATED BELOW 7'-0" AFF.

(#) SHEET KEYNOTES

1. FAN COIL UNITS ARE POWERED FROM THE ASSOCIATED EXTERIOR CONDENSING UNITS. PROVIDE CONNECTIONS IN ACCORDANCE WITH MANUFACTURER'S REQUIREMENTS.
2. PROVIDE CONDUIT EXPANSION/DEFLECTION FITTINGS FOR CONDUITS PASSING THRU GRIDLINES B AND 2. PROVIDE EXPANSION JOINT IN ACCORDANCE WITH DETAIL E6/E-501.
3. PROVIDE DISCONNECT SWITCH NEXT TO WATER HEATER. SEE E-610 EQUIPMENT CONNECTION SCHEDULE FOR MORE INFORMATION.
4. PROVIDE MOTOR-RATED SWITCH FOR GARBAGE DISPOSAL AND MOUNT 6" ABOVE COUNTER.
5. ROUTE FEEDER TO MECHANICAL UNITS OVER THE ROOF AND DOWN THE SIDE OF THE BUILDING TO THE DISCONNECT SWITCH. PENETRATE THE ROOF IN THE ELECTRICAL ROOM, BUT NOT OVER TOP OF ANY ELECTRICAL EQUIPMENT. PROVIDE ROOF PENETRATIONS IN ACCORDANCE WITH F2/A-501.
6. PROVIDE NEMA 4X DISCONNECT SWITCHES.
7. ROUTE FEEDER FROM ELECTRICAL ROOM UNDERGROUND TO THE DISCONNECT SWITCHES. ROUTE FEEDERS FROM DISCONNECT SWITCHES TO ACCU UNITS UNDERGROUND. REFER TO CIVIL PLAN FOR DUCT BANK ROUTING AND ASSOCIATED HANDHOLE LOCATIONS. COORDINATE FINAL LOCATION OF DISCONNECT SWITCHES WITH CONTRACTING OFFICER.
8. PROVIDE JUNCTION BOX SIZED TO HOUSE THE 120V-24V TRANSFORMER PROVIDED WITH THE VAV UNITS. COORDINATE FINAL LOCATION OF JUNCTION BOX WITH CONTROLS CONTRACTOR.
9. PROVIDE 120V-24V TRANSFORMER FOR MECHANICAL ONBOARD CONTROLLERS. CONTROLS CONTRACTOR MUST PROVIDE DIRECTION ON REQUIRED TRANSFORMER SIZE. MOUNT TRANSFORMER IN JUNCTION BOX IN AN ACCESSIBLE LOCATION. COORDINATE FINAL LOCATION OF JUNCTION BOX WITH CONTROLS CONTRACTOR.
10. ROUTE FEEDER FROM ELECTRICAL ROOM TO VESTIBULE THROUGH THE UTILITY CORRIDOR ABOVE THE BREAK ROOM. REFER TO DETAIL A5/A-401 FOR ADDITIONAL INFORMATION ON UTILITY CORRIDOR.

GRAPHIC SCALE(S)

0 4' 8' 16' 24'
SCALE: 1/8" = 1'-0"

PLAN NORTH

STATE OF OHIO
MARK OSSANNA
PE.93786
REGISTERED
PROFESSIONAL ENGINEER

MARK	DESCRIPTION	DATE

DESIGNED BY: M. OSSANNA
DRAWN BY: M. BAGOURA
CHECKED BY: B. MITAROTONDA
SUBMITTED BY: D. PEARSON
QA/QC: ANSI D
ISSUE DATE: MAY 2026
ANG PROJECT NO.: PBXP222050
CONTRACT NO.: FA8803-21-D-0008
TASK ORDER NO.: W50S8R23F0009

OHIO AIR NATIONAL GUARD
MANSFIELD LAHM AIR NATIONAL GUARD BASE, OH

JACOBS GOVERNMENT SERVICES
2600 MICHELSON SR, STE 500
IRVINE, CA 92612

MANSFIELD LAHM AIR NATIONAL GUARD BASE, OH
REPAIR B403 FOR CYBER
FA877006
ELECTRICAL POWER PLAN - MECHANICAL AND PLUMBING

SHEET ID
EM101

TYPE B-3 FINAL

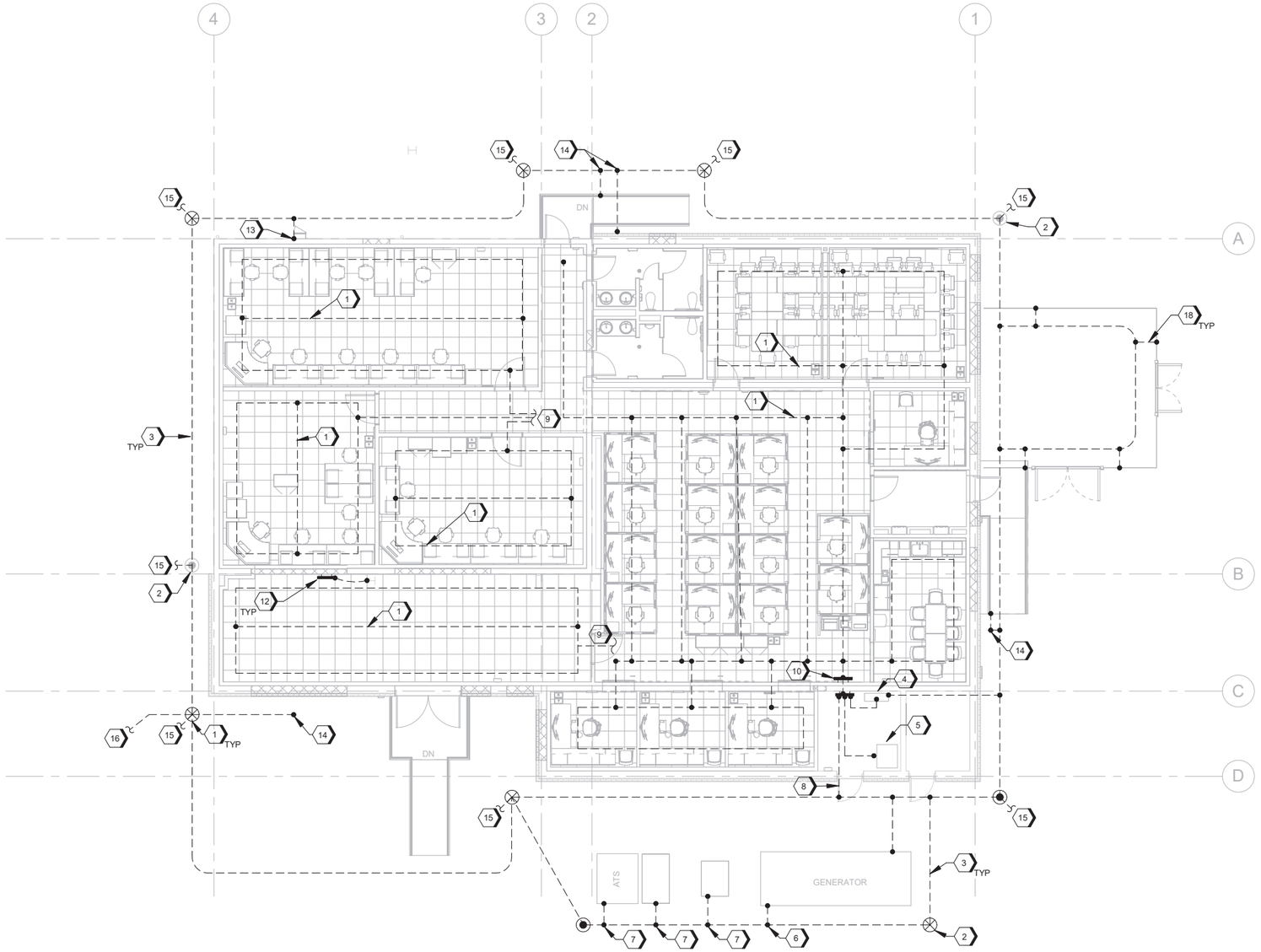

A1 GROUNDING PLAN
SCALE 1/8" = 1'-0"

GENERAL SHEET NOTES

A. NO PART OF THE FACILITY STRUCTURE MAY BE USED AS A DOWN CONDUCTOR OR AS A GROUNDING ELECTRODE CONDUCTOR.

B. LOCATE GROUND LOOP CONDUCTOR NOT LESS THAN 18" BELOW GRADE AND 3'-0" TO 5'-0" AWAY FROM THE FOUNDATION WALL.

C. BOND RAISED FLOOR SYSTEMS BONDED IN ACCORDANCE WITH MANUFACTURER RECOMMENDATIONS.

D. ALL EQUIPMENT GROUND CONNECTION MUST BE BOLTED DOUBLE LUG TYPE.

E. COORDINATE LOCATION OF GROUNDING BUS BARS WITH EQUIPMENT IN ELECTRICAL ROOMS AND OTHER SPACES TO PREVENT CONFLICTS.

F. PROVIDE GROUNDING SYSTEM TESTING. GROUNDING SYSTEM MUST NOT EXCEED 10 OHMS. REFER TO SPECIFICATIONS 26 20 00 AND 33 71 02 FOR ADDITIONAL REQUIREMENTS.

G. PRIOR TO INSTALLING ANY RF SHIELDING IN THE BUILDING, TEST THE RESTISTANCE OF EVERY METAL STUD WITHIN THE SECURE BOUNDARY. GROUND RESISTANCE MEASURED AT EACH STUD MUST MEASURE NO HIGHER THAN 1 OHM. IF THE GROUND RESISTANCE MEASURES GREATER THAN 1 OHM AT ANY METAL STUDS, DOCUMENT THE LOCATIONS AND REPORT THE FINDINGS TO THE CONTRACTING OFFICER.

H. PRIOR TO START OF WORK, COORDINATE GROUNDING REQUIREMENTS WITH THE RF SHIELDING MANUFACTURER BEING PROVIDED AS PART OF THIS PROJECT.

(#) SHEET KEYNOTES

1. PROVIDE #6 AWG BARE COPPER CONDUCTOR UNDER THE FLOOR. BOND CONDUCTOR TO EVERY THIRD PEDESTAL TO THE UNDER FLOOR GROUND RING.
2. EXISTING GROUND ROD.
3. PROVIDE #4/0 BARE COPPER GROUND RING CONDUCTOR.
4. BOND SWITCHBOARD TO MAIN GROUND BAR WITH #4/0 BARE CONDUCTOR ROUTED IN 3/4" CONDUIT.
5. BOND TRANSFORMER TO MAIN GROUND BAR WITH #1/0 BARE COPPER CONDUCTOR ROUTED IN 3/4" CONDUIT.
6. BOND GENERATOR TO GROUND RING WITH #4/0 BARE COPPER CONDUCTOR.
7. BOND EQUIPMENT TO GROUND RING WITH #4/0 BARE COPPER CONDUCTOR. STUB UP GROUND CONDUCTOR INTO OPENING UNDER EQUIPMENT.
8. BOND GROUND BAR TO GROUND RING WITH #4/0 BARE COPPER CONDUCTOR. ROUTE UNDERGROUND IN A 1" CONDUIT.
9. PROVIDE #6 AWG BARE COPPER CONDUCTOR UNDER FLOOR TO THE "RED" GROUND BAR IN THE SECURE AREA.
10. "RED" GROUND BAR. PROVIDE #1/0 BARE COPPER CONDUCTOR IN 3/4" CONDUIT BACK TO GROUND BAR IN ELECTRICAL ROOM. MOUNT GROUND BAR UNDER THE RAISED ACCESS FLOORING.
11. BOND #1/0 GROUND CONDUCTOR TO EXISTING STRUCTURAL STEEL COLUMN.
12. BOND PDU, UPS AND BATTERY CABINETS TO GROUND BAR WITH #2/0 BARE COPPER CONDUCTOR.
13. BOND LADDER TO GROUND RING WITH #6 AWG BARE COPPER CONDUCTOR. ROUTE CONDUCTOR BELOW GRADE.
14. BOND HAND RAIL TO GROUND RING WITH #6 AWG BARE COPPER CONDUCTOR. ROUTE CONDUCTOR BELOW GRADE.
15. DOWN CONDUCTOR TO LPS. FOR CONTINUATION SEE DRAWING EG102.
16. PROVIDE GROUNDING TEST WELL CONNECTION POINT FOR ANTENNA PAD. REFER TO ES101 FOR CONTINUATION OF GROUND CONDUCTOR AND TEST WELL LOCATION.
17. BOND GROUND RING CONDUCTOR TO EXISTING GROUND ROD IN TEST WELL.
18. BOND METAL FENCING TO GROUND RING WITH #6 BARE COPPER CONDUCTOR. ROUTE CONDUCTOR BELOW GRADE.
19. BOND GROUND BAR TO STRUCTURAL STEEL WITH #4/0 BARE COPPER CONDUCTOR.

GRAPHIC SCALE(S)

0 4' 8' 16' 24'

SCALE: 1/8" = 1'-0"

PLAN NORTH

STATE OF OHIO
MARK OSSANNA
PE.93786
REGISTERED
PROFESSIONAL ENGINEER

MARK	DESCRIPTION	DATE

ISSUE DATE: MAY 2026
ANG PROJECT NO.: PBXP22050
CONTRACT NO.: FA8803-21-D-0008
TASK ORDER NO.: W50S8R23F0009

DESIGNED BY: M. OSSANNA
DRAWN BY: K. LONBECK
CHECKED BY: B. MITAROTONDA
SUBMITTED BY: D. PEARSON
SIZE: ANSI D

OHIO AIR NATIONAL GUARD
MANSFIELD LAHM AIR NATIONAL GUARD BASE, OH

JACOBS GOVERNMENT SERVICES
2600 MICHELSON SR, STE 500
IRVINE, CA 92612

MANSFIELD LAHM AIR NATIONAL GUARD BASE, OH
REPAIR B403 FOR CYBER
FA877006
ELECTRICAL GROUNDING PLAN

SHEET ID
EG101

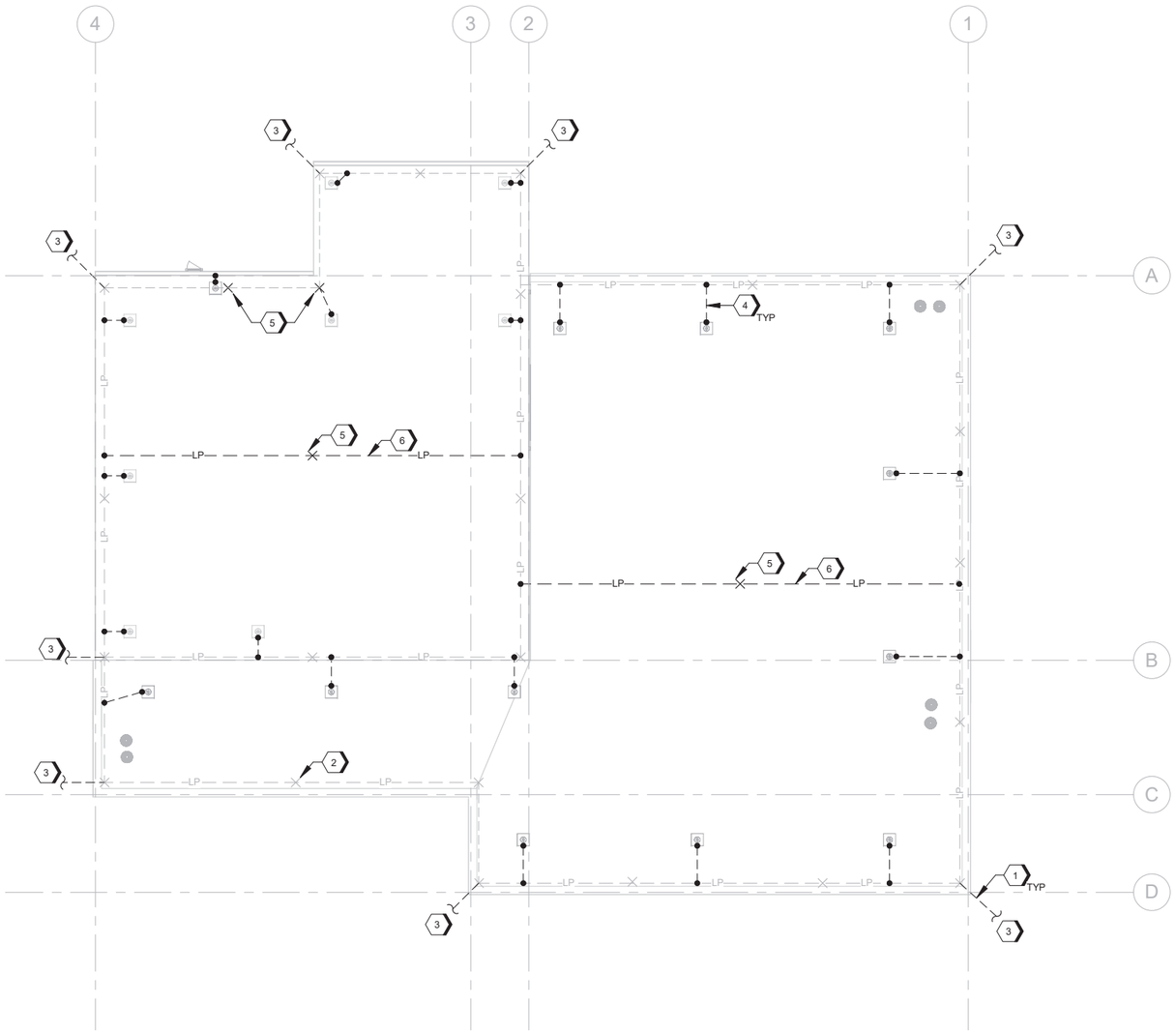

A1 LIGHTNING PROTECTION PLAN
SCALE 1/8" = 1'-0"

GENERAL SHEET NOTES

A. EXISTING LPS SYSTEM IS SHOWN. CONTRACTOR MUST FIELD VERIFY EXISTING CONDITIONS PRIOR TO START OF WORK. PROVIDE A THIRD-PARTY LPS INSPECTION AND TESTING OF THE EXISTING LPS SYSTEM TO REMAIN IN ACCORDANCE WITH NFPA 780 AND UFC 3-575-01. PROVIDE TEST RESULTS TO THE CONTRACTING OFFICER PRIOR TO SUBMITTING ON THE NEW LPS SYSTEM.

B. THE EXISTING BUILDING HAS LPS AIR TERMINALS AND CONDUCTORS ON THE ROOF THAT ARE SHOWN SCREENED ON THIS DRAWING. VERIFY EXISTING CONDITIONS AND REPORT ANY CONFLICTS TO THE CONTRACTING OFFICER'S REPRESENTATIVE PRIOR TO START OF WORK.

C. NO PART OF THE FACILITY STRUCTURE SHALL BE USED AS A DOWN CONDUCTOR OR USE ANY PORTION OF THE STRUCTURE AS A CONDUCTOR, EXCEPT AS NECESSARY TO PROTECT THE STRUCTURE ITSELF.

D. ACTUAL JOB-SITE CONDITIONS MAY NECESSITATE SLIGHT ALTERATIONS IN GROUNDING ELECTRODE LOCATIONS.

E. CONNECTIONS TO GROUND LOOP CONDUCTOR SHALL BE MADE AT ANY POINT NOT LESS THAN 18" BELOW GRADE AND 3'-0" TO 5'-0" AWAY FROM THE FOUNDATION WALL.

F. ALL RAISED FLOOR SYSTEMS BONDED PER MANUFACTURER REQUIREMENTS FOR A GROUNDED SYSTEM.

G. BOND ALL METALLIC PIPES INCLUDING WATER, FIRE, GAS, SEWER, STORM, ETC, WHICH ENTER THE STRUCTURE TO THE NEAREST GROUNDING ELECTRODE OR GROUND LOOP.

H. ALL INTERIOR GROUND CONDUCTORS, NOT INCLUDING BRAIDED, SHALL BE EMBEDDED IN THE CONCRETE FLOOR SLAB WHEREVER POSSIBLE. ALL MECHANICAL CONNECTIONS SHALL BE EXPOSED AND INSPECTABLE.

I. ALL EQUIPMENT GROUND CONNECTION MUST BE BOLTED DOUBLE LUG TYPE.

J. COORDINATE LOCATION OF GROUNDED BUS BARS WITH EQUIPMENT IN ELECTRICAL ROOMS AND OTHER SPACES TO PREVENT CONFLICTS.

K. PROVIDE A COMPLETE LPS SYSTEM THAT MEETS NFPA 780, UFC 3-575-01 AND AFMAN 32-1065 REQURIEMENTS.

#SHEET KEYNOTES

1. PROVIDE DOWN CONDUCTOR ROUTED DOWN THE FACE OF THE BUILDING AND TERMINATE AT A GROUND ROD THAT IS PART OF THE FACILITY GROUND RING. BOND DOWN CONDUCTOR TO EXISTING LPS SYSTEM ON THE ROOF. DOWN CONDUCTORS MUST BE PROTECTED AS REQUIRED BY NFPA 780. FOR CONTINUATION TO GROUND RING, SEE DRAWING EG101. ALUMINUM CONDUCTOR FROM ROOF SYSTEM MUST TRANSITION TO COPPER ONCE LOOPED ARQUND THE GUTTER AND NO LONGER IN CONTACT WITH DISSIMILAR METAL.
2. EXISTING AIR TERMINAL. PRESERVE AND PROTECT.
3. DOWN CONDUCTOR. FOR CONTINUATION SEE DRAWING EG101
4. BOND FALL PROTECTION ANCHOR TO EXISTING LIGHTNING PROTECTION SYSTEM.
5. PROVIDE NEW AIR TERMINAL. BOND TO EXISTING LIGHTNING PROTECTION CONDUCTORS.
6. PROVIDE ALUMINUM LPS CONDUCTOR THAT MATCHES EXISTING LPS CONDUCTOR SIZE. BOND NEW LPS CONDUCTOR TO EXISTING LPS CONDUCTOR.

GRAPHIC SCALE(S)

PLAN NORTH

0 4' 8' 16' 24'
SCALE: 1/8" = 1'-0"

STATE OF OHIO
MARK OSSANNA
PE.93786
REGISTERED
PROFESSIONAL ENGINEER

MARK	DESCRIPTION	DATE

DESIGNED BY: M. OSSANNA
DRAWN BY: K. LONBECK
CHECKED BY: B. MITAROTONDA
SUBMITTED BY: S. PEARSON
DATE:
ANSI D

ISSUE DATE: MAY 2026
ANG PROJECT NO.: PBXP22050
CONTRACT NO.: FA8903-21-D-0008
TASK ORDER NO.: W50S8R23F0009

OHIO AIR NATIONAL GUARD
MANSFIELD LAHM AIR NATIONAL GUARD BASE, OH

JACOBS GOVERNMENT SERVICES
2600 MICHELSON SR. STE 500
IRVINE, CA 92812

MANSFIELD LAHM AIR NATIONAL GUARD BASE, OH
REPAIR B403 FOR CYBER
FA877006
ELECTRICAL LIGHTNING PROTECTION PLAN

SHEET ID
EG102

TYPE B-3 FINAL

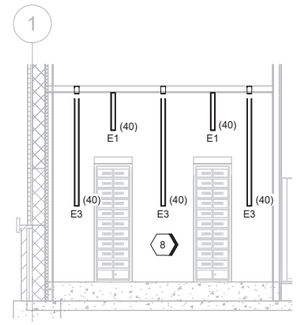

F7 VESTIBULE LIGHTING - SOUTH ELEVATION
SCALE 1/4" = 1'-0"

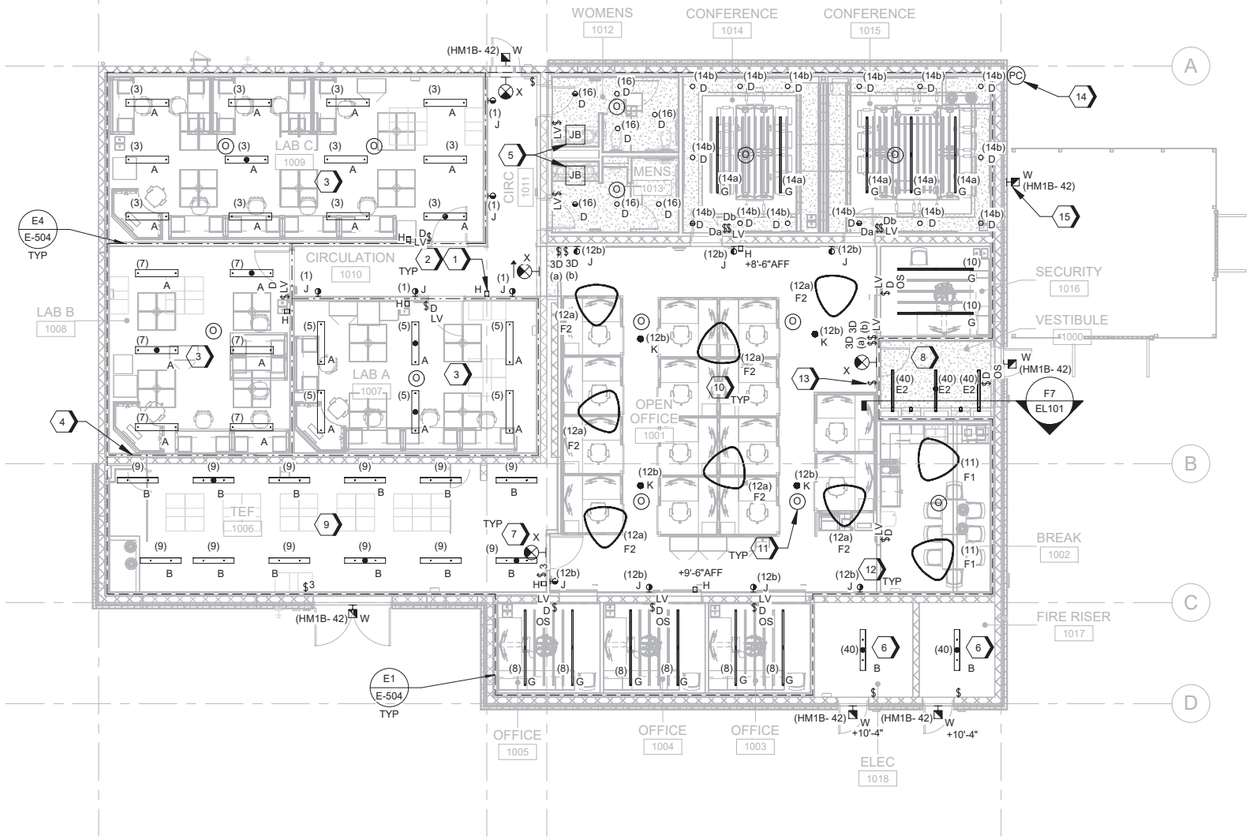

A1 LIGHTING PLAN
SCALE 1/8" = 1'-0"

GENERAL SHEET NOTES

A. FURNISH, INSTALL, AND CONNECT THE QUANTITY OF CONDUCTORS IN THE CONDUIT AS REQUIRED FOR THE COMBINATIONS OF LIGHTS AND LIGHT SWITCHES ASSIGNED TO THE BRANCH CIRCUIT SHOWN.

B. FURNISH #12 AWG WIRE WITH #12 AWG GROUND IN 3/4" CONDUIT FOR CIRCUIT LENGTHS LESS THAN 75'-0". PROVIDE #10 AWG WIRE SIZE FOR LENGTHS GREATER THAN 75'-0". ALL CONDUCTORS INSTALLED IN LIGHT FIXTURES SHALL HAVE 90 DEGREE C RATED INSULATION.

C. FOR LUMINAIRE SCHEDULE AND LUMINAIRE NOTES, SEE SHEE E-630.

D. COORDINATE LOCATION AND INSTALLATION OF LUMINAIRES WITH OTHER CONSTRUCTION THAT PENETRATES CEILING OR IS SUPPORTED BY THEM.

E. COORDINATE LUMINAIRE MOUNTING HEIGHTS AND LOCATIONS WITH THE ARCHITECTURAL REFLECTED CEILING PLANS, AND INTERIOR AND EXTERIOR ELEVATION DRAWINGS.

F. FOR ANY LUMINAIRES HAVING AN EMERGENCY DRIVER, PROVIDE AN ADDITIONAL UNSWITCHED CONDUCTOR SO THAT LUMINAIRES WILL COME ON DURING POWER FAILURE. WIRE PER MANUFACTURER'S RECOMMENDATIONS SO THAT THE LUMINAIRE CAN BE SWITCHED ON AND OFF AND THE BATTERY WILL STILL MAINTAIN ITS CHARGE.

G. OCCUPANCY AND DAYLIGHT SENSOR LOCATIONS AND QUANTITIES SHOWN SCHEMATICALLY ONLY. INSTALL QUANTITY AND TYPE (360 OR DIRECTIONAL) AT LOCATIONS AS NECESSARY TO ACCOMPLISH DESIRED CONTROL PER SENSOR MANUFACTURER'S RECOMMENDATION. OCCUPANCY SENSORS SHOW CONTROL OF LUMINAIRES IN THAT ROOM OR GENERAL AREA. IN AREAS WHERE SWITCHING IS NOT CLEAR, LOWER CASE LETTERS IN PARENTHESES INDICATE WHICH SENSORS CONTROL THE LUMINAIRES. MAKE FINAL ADJUSTMENT TO CEILING MOUNTED OCCUPANCY SENSORS SUCH THAT MOTION FROM OUTSIDE OF ROOM DOES NOT ACTIVATE LUMINAIRES.

H. WALL MOUNTED EXIT SIGNS MUST BE MOUNTED AT 9'-0" AFF, TYPICAL UON.

I. REFER TO THE LIGHTING CONTROL MATRIX ON DRAWING E-630 FOR ADDITIONAL REQUIREMENTS ON THE LIGHTING CONTROL SCHEME FOR EACH ROOM.

J. SUPPLY POWER TO LUMINAIRES FROM PANEL HL UNLESS OTHERWISE NOTED.

K. RECEPTACLES, SWITCHES, CONDUITS, JUNCTION BOXES AND OTHER DEVICES WITHIN SECURE AREA MUST BE SURFACE MOUNTED. NO RECESSED DEVICES IN SECURE AREA. PROVIDE CAST METAL, HUB-TYPE JUNCTION BOXES FOR SURFACE-MOUNTED DEVICES LOCATED BELOW 7'-0" AFF.

#SHEET KEYNOTES

1. BLUE WARNING LIGHTS FED VIA PANEL LP1B, CIRCUIT 18.
2. MOUNT BLUE WARNING LIGHTS AT 8'-0" AFF TO CENTER OF FIXTURE UON.
3. SUSPEND LUMINAIRES IN LAB ROOMS AT 9'-0" AFF TO BOTTOM OF FIXURE.
4. LINE REPRESENTS BUILDING EXPANSION JOINT. PROVIDE CONDUIT EXPANSION/DEFLECTION FITTINGS FOR CONDUITS PASSING THRU THIS EXPANSION JOINT IN ACCORDANCE WITH DETAIL E6/E-501.
5. PROVIDE JUNCTION BOX AT 48" AFF FOR ILLUMINATED MIRROR. PROVIDE [3/4"C, 2#12, 1#12G]. LIGHTS FED VIA PANEL LP1, CIRCUIT 16.
6. SUPPLY POWER FROM PANEL HM1B. SUSPEND AT 9'-0" AFF TO BOTTOM OF FIXTURE.
7. CONNECT EXIT LIGHT TYPE 'X' TO NEAREST LUMINAIRE WITHIN THE SAME ROOM.
8. PROVIDE DIMMING CONTROL FOR VESTIBULE LIGHTS. SUPPLY POWER TO LIGHTS FROM PANEL HM1B. PROVIDE A DIMMER SWITCH THAT CAN REMAIN AT THAT ILLUMINATION LEVEL AND DOESN'T REVERT BACK WHEN LIGHTS ARE TURNED ON/OFF. ROUTE FEEDERS TO ELECTRICAL ROOM THROUGH THE UTILITY CORRIDOR ABOVE THE BREAK ROOM. DO NOT PENETRATE THE SECURE AREA WALLS.
9. SUSPEND LUMINAIRES IN TEF AT 8'-0" AFF TO BOTTOM OF FIXTURE.
10. SUSPEND OVERHEAD LUMINAIRES IN OPEN OFFICE AT 7'-8" AFF TO BOTTOM OF FIXTURE.
11. MOUNT OCCUPANCY SENSOR TO ENSURE SIGHT LINES ARE NOT BLOCKED.
12. MOUNT WALL SCONCE 7'-0" TO THE BOTTOM OF THE FIXTURE.
13. DEDICATED SWITCH FOR CONTROLLING THE BLUE LIGHTS IN THE SECURE AREA. PROVIDE A METAL LABEL ABOVE THE SWITCH THAT READS "BLUE SECURITY LIGHTS".
14. WALL-MOUNT PHOTOCELL AS HIGH AS POSSIBLE ON SIDE OF BUILDING. FIELD ADJUST AND AIM PER MANUFACTURER'S RECOMMENDATIONS.
15. ALIGN ELEVATION WITH WALL PACK ABOVE THE ENTRY DOOR.

LEGEND

- SECURE AREA BOUNDARY
- CONTROLLED AREA BOUNDARY

GRAPHIC SCALE(S)

PLAN NORTH

0 4' 8' 16' 24'
SCALE: 1/8" = 1'-0"

STATE OF OHIO
MARK OSSANNA
PE.93786
REGISTERED
PROFESSIONAL ENGINEER

MARK	DESCRIPTION	DATE

ISSUE DATE: MAY 2026
ANG PROJECT NO.: PBXP22050
CONTRACT NO.: FA8803-21-D-0008
TASK ORDER NO.: W50S8R23F0009

DESIGNED BY: M. OSSANNA
DRAWN BY: E. HAJAS
CHECKED BY: B. MITAROTONDA
SUBMITTED BY: D. PEARSON
QA/QC: ANSI D

OHIO AIR NATIONAL GUARD
MANSFIELD LAHM AIR NATIONAL GUARD BASE, OH

JACOBS GOVERNMENT SERVICES
2600 MICHELSON SR, STE 500
IRVINE, CA 92612

MANSFIELD LAHM AIR NATIONAL GUARD BASE, OH
REPAIR B403 FOR CYBER
FA877006
ELECTRICAL LIGHTING PLAN

SHEET ID
EL101

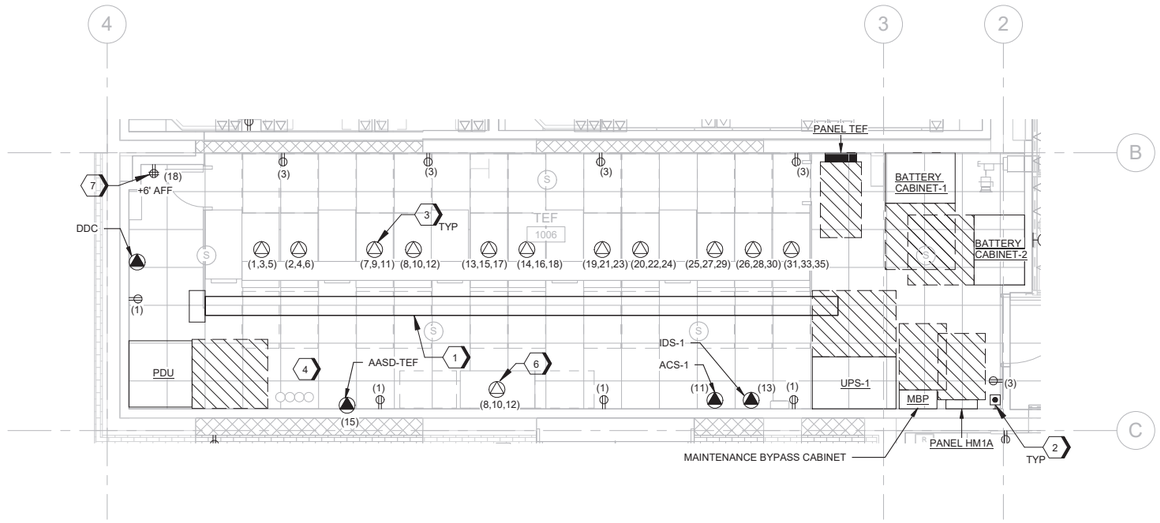

E1 ENLARGED PLAN - TEFF 1006

SCALE 1/4" = 1'-0"

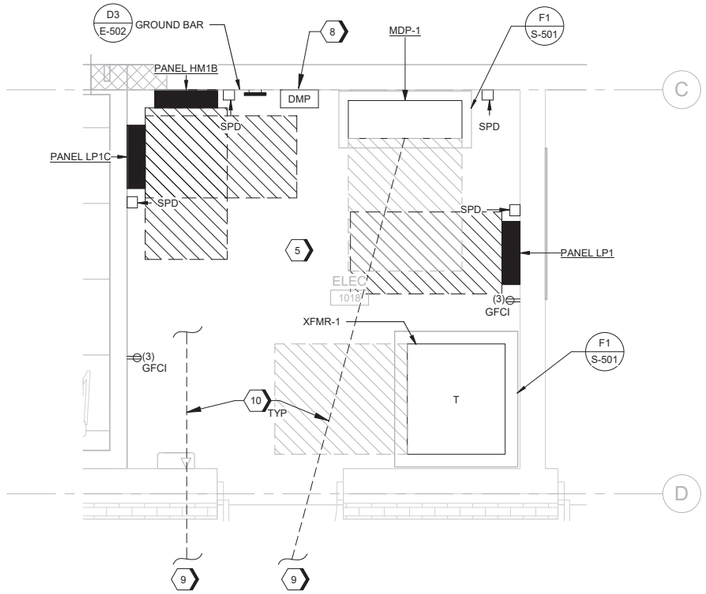

A1 ENLARGED PLAN - ELECTRICAL ROOM 1019

SCALE 1/2" = 1'-0"

GENERAL SHEET NOTES

A. REFER TO COMMUNICATIONS DRAWINGS FOR THE RACK PDU'S THAT WILL BE PROVIDED AND PLUGGED INTO THE L14-60R RECEPTACLES TO PROVIDE 120V AND 220V RECEPTACLES AT EACH COMMUNICATIONS RACK.

SHEET KEYNOTES

1. PROVIDE 600A, 208Y/120V, 3-PHASE, 4-WIRE, 65kAIC BUSWAY. MOUNT BUSWAY AT 9'-0" AFF. PROVIDE STRUCTURAL SUPPORTS AS RECOMMENDED BY MANUFACTURER.
2. PROVIDE EPO SWITCH WITH CLEAR PLASTIC COVER. PROVIDE NAME PLATE WITH LABEL "EMERGENCY POWER OFF". WHEN ACTIVATED, EPO SWITCH MUST SHUT OFF POWER TO ALL SERVER RACKS AND HVAC EQUIPMENT WITHIN THE ROOM BY ACTIVATING THE ASSOCIATED SHUNT TRIP BREAKERS.
3. PROVIDE 60A PLUG-IN BREAKERS, EACH WITH A 10'-0" SEOOW FLEXIBLE CABLE WITH NEMA L14-60R SLEEVE RECEPTACLE AND MATCHING PLUG. COORDINATE REQUIREMENTS WITH SERVER RACK INSTALLATION.
4. SUPPLY POWER TO RECEPTACLES IN THIS ROOM FROM PANEL TEF UNLESS OTHERWISE NOTED.
5. SUPPLY POWER TO RECEPTACLES IN THIS ROOM FROM PANEL LP1C UNLESS OTHERWISE NOTED.
6. PROVIDE A 14-60R RECEPTACLE AND [1"C, 4#6, 1#10G] TO PDU-1.
7. DEDICATED RECEPTACLE FOR SOUND MASKING AND PUBLIC ADDRESS SYSTEMS. COORDINATE FINAL LOCATION WITH CONTRACTING OFFICER PRIOR TO ROUGH IN.
8. MOUNT DIGIAL POWER METER (DPM) IN NEMA 1 ENCLOSURE. PROVIDE DPM WITH DATA COLLECTION AND STORAGE IN ACCORDANCE WITH ASHRAE 90.1 2019 REQUIREMENTS.
9. FOR CONTINUATION, REFER TO DRAWING ES101.
10. UNDERGROUND CONDUITS MUST PENETRATE THE STEM WALL BETWEEN 12" BELOW GRADE TO 30" BELOW GRADE. CONDUITS MUST NOT PENETRATE THE FOOTING. PROVIDE 3" BETWEEN CONDUIT PENETRATIONS. LOCATE THE CONDUIT PENETRATIONS IN STEM WALL TO ENSURE NO VERTICAL REBAR IS CUT. PROVIDE SCANNING AS NECESSARY.

GRAPHIC SCALE(S)

0 2' 4' 8' 12'

SCALE: 1/4" = 1'-0"

PLAN NORTH

STATE OF OHIO
MARK OSSANNA
PE.93786
REGISTERED
PROFESSIONAL ENGINEER

MARK	DESCRIPTION	DATE

DESIGNED BY: M. OSSANNA
DRAWN BY: K. LONBECK
CHECKED BY: B. MITAROTONDA
SUBMITTED BY: S. PEARSON
QA/QC: ANSI D

ISSUE DATE: MAY 2026
ANG PROJECT NO.: PBXP222050
CONTRACT NO.: FA8903-21-D-0008
TASK ORDER NO.: W50S8R23F0009

OHIO AIR NATIONAL GUARD
MANSFIELD LAHM AIR NATIONAL GUARD BASE, OH

JACOBS GOVERNMENT SERVICES
2600 MICHELSON SR, STE 500
IRVINE, CA 92812

MANSFIELD LAHM AIR NATIONAL GUARD BASE, OH
REPAIR B403 FOR CYBER
FA877006
ELECTRICAL ENLARGED PLAN

SHEET ID
E-401

TYPE B-3 FINAL

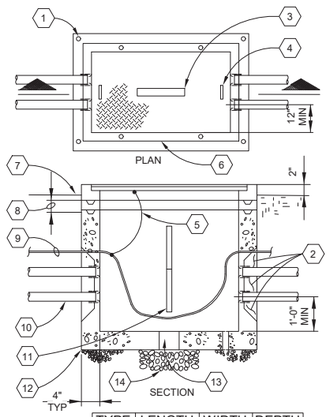

TYPE	LENGTH	WIDTH	DEPTH
H	2'-0"	3'-0"	2'-8"

KEYNOTES:

1. 4 LIFTING INSERTS.
2. SEE DETAIL E3/E-501.
3. INSCRIBE "ELECTRICAL".
4. LIFT BRACKETS.
5. BOND COVER IN ACCORDANCE WITH NEC 314.30(D). PROVIDE 3'-0" OF SLACK BONDING CONDUCTOR.
6. HINGED COVER.
7. FINISH GRADE.
8. GRADING RINGS AS REQ'D.
9. GROUND CONDUCTOR.
10. CONDUIT, SLOPED TOWARDS HANDHOLES, TYP.
11. CABLE RACKS.
12. COMPACTED GRAVEL, 12" DEEP, MIN 3/4" MINUS.
13. 6" MIN DRAIN WITH GRATE.
14. 10CF 1" TO 1/2" GRAVEL, ALL AROUND SUMP

E1 HANDHOLE

SCALE NTS

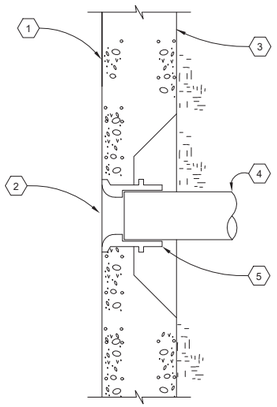

KEYNOTES:

1. INSIDE FACE OF HANDHOLE/ MANHOLE WALL.
2. PVC END BELL.
3. OUTSIDE FACE OF HANDHOLE/ MANHOLE WALL.
4. PVC CONDUIT.
5. GROUT TO FULL WALL THICKNESS AROUND PIPES AT KNOCKOUTS, TYP.

E3 CONDUIT HANDHOLE/MANHOLE ENTRANCE

SCALE NTS

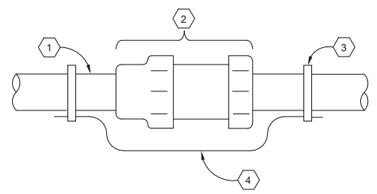

NOTE:

A. PROVIDE AT CONCRETE OR FACILITY EXPANSION JOINTS.

KEYNOTES:

1. METAL CONDUIT.
2. EXPANSION JOINT.
3. GROUNDING CLAMP.
4. EXTERNAL TIN PLATED COPPER BRAID GROUNDING BONDING JUMPER STRAP.

E6 CONDUIT EXPANSION JOINT

SCALE NTS

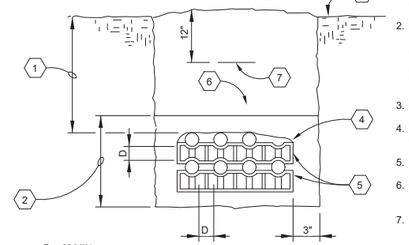

KEYNOTES:

1. 2'-0" MIN (< 600 VOLTS) 3'-0" MIN (> 600 VOLTS)
2. BACKFILL WITH BEDDING AND PIPE ZONE MATERIAL 3" ABOVE AND 3" BELOW CONDUITS, HAND TAMP.
3. FINISH GRADE.
4. TIE DOWN WIRE, MAX 4'-0" APART.
5. SPACERS.
6. COMPACTED EARTH BACKFILL.
7. 3" WIDE DETECTABLE TAPE.

NOTE:

A. INSTALLATION OF DIRECT BURIAL DUCT BANKS WHICH INCLUDE THREE OR MORE CONDUITS OR DUCTS MUST BE MADE IN ACCORDANCE WITH THIS DETAIL, UON.

E8 TYPICAL UNDERGROUND CONDUIT

SCALE NTS

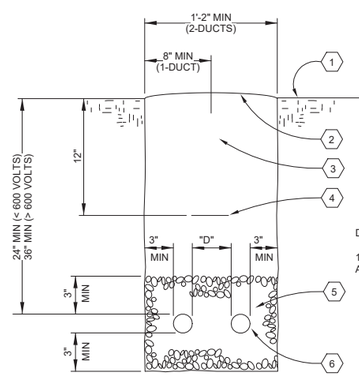

KEYNOTES:

1. FINISH GRADE.
2. SEE TRENCH AC TOPPING DETAIL (IF APPLICABLE).
3. COMPACTED EARTH BACKFILL.
4. PLASTIC, MAGNETIC 3" WIDE DETECTABLE TAPE.
5. COMPACTED BEDDING AND PIPE ZONE MATERIAL.
6. CONDUIT.

D = 3" MIN

12" MIN SEPARATION BETWEEN POWER AND COMMUNICATIONS CONDUITS.

C1 TRENCH AND CONDUIT PLACEMENT

SCALE NTS

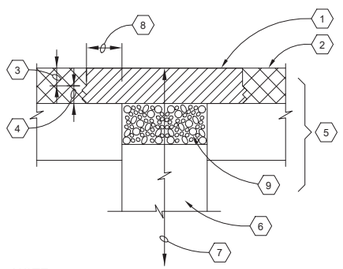

KEYNOTES:

1. 8" PCC CONCRETE.
2. EXISTING CONCRETE.
3. 2 1/2" SAW CUT, TYP.
4. JACKHAMMERED EDGE, TYP.
5. EXISTING SURFACING SHOWN FOR REFERENCE ONLY, ACTUAL CONDITIONS WILL VARY.
6. TRENCH BACKFILL.
7. 2'-0" MIN (<600 VOLTS) 3'-0" MIN (>600 VOLTS) TO TOP OF DUCT.
8. 1'-0" MIN SETBACK.
9. 6" COMPACTED BASE COURSE OR CLSM

NOTE:

A. IF LOCATION OF TRENCH SAW CUT IS WITHIN 2'-0" OF AN EXISTING JOINT OR EDGE OF CONCRETE, REPLACE ENTIRE CONCRETE TO THE JOINT OR EDGE.

B. CONSTRUCT JOINTS ACROSS NEW CONCRETE TO MATCH EXISTING JOINT TYPES AND LOCATIONS.

C3 TRAFFIC TRENCH AC TOPPING

SCALE NTS

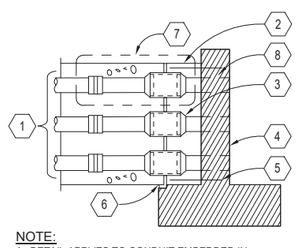

NOTE:

A. DETAIL APPLIES TO CONDUIT EMBEDDED IN STRUCTURAL CONCRETE AT LOCATIONS IDENTIFIED ON DWGS.

B. DETAIL APPLIES TO ALL EXPANSION JOINTS FOR THE UNDERGROUND CONCRETE ENCASED CONDUITS.

C. DETAIL SHOWN IS ELEVATION SECTION.

D. FOR FOOTING DIMENSIONS, SEE STRUCTURAL DETAILS.

KEYNOTES:

1. NUMBER OF CONDUITS AS REQUIRED.
2. 2#5 HOOPS 2" CLEAR.
3. EXPANSION/DEFLECTION COUPLING.
4. ELECTRICAL BUILDING FOUNDATION AND CORBEL.
5. #6 DOWELS IN 1 1/4" DIA DRILLED HOLES AT 1'-6", 4 MIN REQUIRED. EPOXY GROUT DOWELS 1 1/2" MIN THICKNESS) MIN DEPTH INTO WALL.
6. 3/4" X 5" X FULL WIDTH OF ENCASEMENT NEOPRENE BEARING PAD.
7. SEE DETAIL A3/E-504.
8. CAST IN PLACE.

C6 CONCRETE ENCASED DUCT TERMINATION WITH STRUCTURAL CONCRETE

SCALE NTS

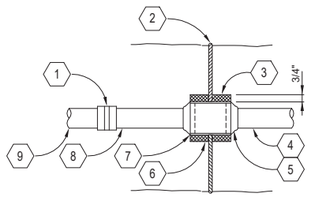

KEYNOTES:

1. ADAPTER REQUIRED FOR PVC CONDUITS.
2. PREMOLDED JOINT FILLER.
3. CLOSED CELL NEOPRENE.
4. GRS CONDUIT.
5. HUB.
6. PROVIDE CONTINUOUS GROUND PATH PER NEC REQUIREMENTS.
7. STAINLESS STEEL CLAMP, TYP.
8. GRS CONDUIT, 6" MIN.
9. CONDUIT, SIZE PER PLANS

NOTE:

A. DETAIL APPLIES TO CONDUIT EMBEDDED IN STRUCTURAL CONCRETE AT BUILDING INTERFACES AND AT STRUCTURAL EXPANSION JOINTS.
B. DETAIL APPLIES TO ALL EXPANSION JOINTS FOR THE UNDERGROUND CONCRETE ENCASED CONDUITS.
C. DETAIL SHOWN IS ELEVATION SECTION.

A1 CONCRETE ENCASED DUCT TERMINATION WITH STRUCTURAL CONCRETE

SCALE NTS

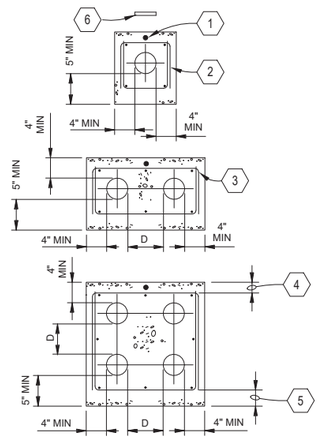

NOTE:

A. PROVIDE 6" MIN COMPACTED GRAVEL, 3/4" MINUS, UNDER ALL CONCRETE ENCASED DUCT RUNS.

B. MINIMUM COVER OF 24".

KEYNOTES:

1. COPPER GROUND CONDUCTOR, TYP.
2. #4@18" OC, TYP.
3. #4 LONGITUDINAL BARS @18" OC MAX, WITH 2'-0" LAP.
4. 2" CLR, TYP TOP AND SIDES.
5. 3" CLR, TYP BOTTOM.
6. UNDERGROUND MARKER 12" BELOW GRADE.

UNLESS OTHERWISE NOTED: D = 3"

A4 CONCRETE ENCASED DUCT BANKS WITH REBAR SUPPORT

SCALE NTS

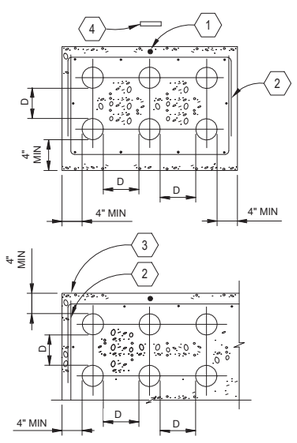

NOTE:

A. PROVIDE 6" MIN COMPACTED GRAVEL, 3/4" MINUS, UNDER ALL CONCRETE ENCASED DUCT RUNS.

B. MINIMUM COVER OF 24".

KEYNOTES:

1. COPPER GROUND CONDUCTOR.
2. #4@1'-6" CENTERS, VERT LEGS 1'-0" MIN.
3. FOR LARGER DUCT BANKS, CONTINUE PATTERN OF REBAR, CONDUIT SEPARATION AND CONCRETE COVER.
4. UNDERGROUND MARKER 12" BELOW GRADE.

UNLESS OTHERWISE NOTED: D = 12"

A7 CONCRETE ENCASED DUCT BANKS WITH REBAR SUPPORT

SCALE NTS

STATE OF OHIO
MARK OSSANNA
PE.93786
REGISTERED
PROFESSIONAL ENGINEER

MARK	DESCRIPTION	DATE

DESIGNED BY: M. OSSANNA
DRAWN BY: K. LONBECK
CHECKED BY: B. MITAROTONDA
SUBMITTED BY: D. PEARSON
D. PEARSON
ANSI D

ISSUE DATE: MAY 2026
ANG PROJECT NO.: PBXP22050
CONTRACT NO.: FA8803-21-D-0008
TASK ORDER NO.: W56SBR23F0009

OHIO AIR NATIONAL GUARD
MANSFIELD LAHM AIR NATIONAL GUARD BASE, OH

JACOBS GOVERNMENT SERVICES
2600 MICHELSON SR, STE 500
IRVINE, CA 92612

MANSFIELD LAHM AIR NATIONAL GUARD BASE, OH
REPAIR B403 FOR CYBER
FA877006
ELECTRICAL DETAILS

SHEET ID

E-501

TYPE B-3 FINAL

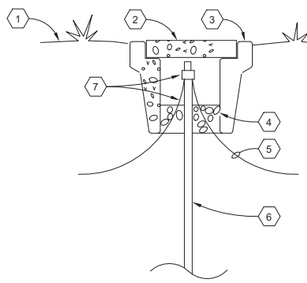

KEYNOTES:
1. GRADE.
2. REINFORCED CONCRETE LID.
3. CURB VALVE BOX.
4. GRAVEL.
5. #4/0 BARE COPPER GROUNDING CONDUCTOR.
6. GROUNDING ELECTRODE.
7. GROUNDING CONNECTORS: EXOTHERMIC WELD.

F1 GROUND TEST WELL

SCALE NTS

NOTE:
A. THE ACCESSIBLE ENDS OF ALL METAL CONDUITS FOR SERVICES, FOR FEEDER CIRCUITS, AND BRANCH CIRCUITS WITH OVERCURRENT PROTECTION RATED 60 AMPS AND GREATER, MUST BE BONDED IN ACCORDANCE WITH THIS DETAIL.

KEYNOTES:
1. GROUND WIRE, BONDING JUMPER, SIZE PER NEC 250.102(C) FOR SUPPLY-SIDE BONDING AND PER NEC 250.102(D) FOR LOAD-SIDE BONDING.
2. EQUIPMENT ENCLOSURE.
3. METAL CONDUIT.
4. GROUNDING BUSHING.

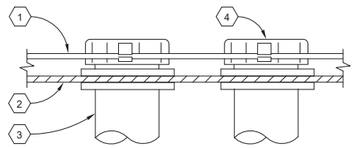

F3 CONDUIT BONDING

SCALE NTS

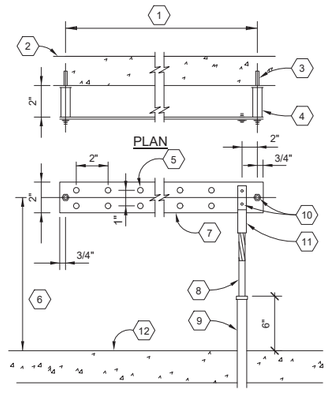

ELEVATION

KEYNOTES:
1. 24" LENGTH MINIMUM.
2. WALL.
3. 5/8" BOLT.
4. INSULATING SPACER, MAX SPAN BETWEEN SUPPORTS NOT TO EXCEED 2'-0".
5. 3/8" DIA.
6. MOUNT GROUND BAR 1'-6".
7. GROUND BUS, HARD DRAWN COPPER BAR 1/4" THICK.
8. GROUND CABLE, TYP.
9. NON-METALLIC CONDUIT WITH BUSHING.
10. SILICON BRONZE, BOLTS, NUTS AND WASHERS. SIZE TO SUIT, TYP.
11. LONG-BARREL CRIMP COMPRESSION TOOL APPLIED 2-HOLE LUG, TYP.
12. FINISHED FLOOR.

D3 GROUNDED BUS BAR

SCALE NTS

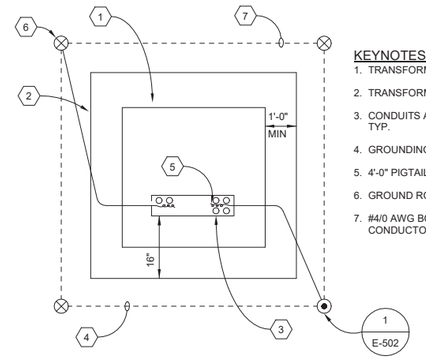

KEYNOTES:
1. TRANSFORMER FOOTPRINT.
2. TRANSFORMER PAD.
3. CONDUITS AS REQUIRED, TYP.
4. GROUNDING LOOP.
5. 4'-0" PIGTAIL, TYP.
6. GROUND ROD, TYP.
7. #4/0 AWG BC GROUND CONDUCTOR, TYP.

F8 EXTERIOR TRANSFORMER PAD - GROUNDING

SCALE NTS

MARK OSSANNA
PE.93786
REGISTERED
PROFESSIONAL ENGINEER
STATE OF OHIO

MARK	DESCRIPTION	DATE

DESIGNED BY: M. OSSANNA
DRAWN BY: K. LONBECK
CHECKED BY: B. MITAROTONDA
SUBMITTED BY: S. PEARSON
QA/QC:
ANSI D

ISSUE DATE: MAY 2026
ANG PROJECT NO.: PBXP222050
CONTRACT NO.: FA8903-21-D-0008
TASK ORDER NO.: W50SBR23F0009

OHIO AIR NATIONAL GUARD
MANSFIELD LAHM AIR NATIONAL GUARD BASE, OH

JACOBS GOVERNMENT SERVICES
2600 MICHELSON SR, STE 500
IRVINE, CA 92812

MANSFIELD LAHM AIR NATIONAL GUARD BASE, OH
REPAIR B403 FOR CYBER
FA8777006
ELECTRICAL GROUNDING DETAILS

SHEET ID

E-502

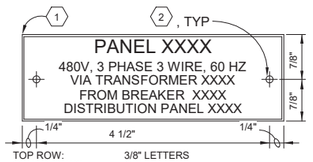

TOP ROW: 3/8" LETTERS
OTHER ROWS: 1/8" LETTERS
1/4" SPACING BETWEEN FIRST 2 ROWS
1/8" SPACING BETWEEN OTHER ROWS

COLOR SCHEDULE		
TYPE	BACKGROUND	LETTERING
NORMAL POWER	WHITE	BLACK
UPS POWER	RED	WHITE

REQUIRED DATA

FIRST LINE: PANEL DESIGNATION
SECOND LINE: PHASE, VOLTAGE, FREQUENCY
THIRD LINE: BREAKER (AND TRANSFORMER)
FOURTH LINE: POWER SOURCE (IDENTIFY BOTH SOURCES FOR EQUIPMENT SERVED FROM MULTIPLE SOURCES)

XXXX = BASED ON FINAL DESIGN SHOP DRAWING

KEYNOTES:
1. BEVELED EDGES.
2. 1/8" HOLE FOR SST SCREW, (2 PLACES).

E1 EQUIPMENT NAMEPLATE REQUIREMENTS

SCALE NTS

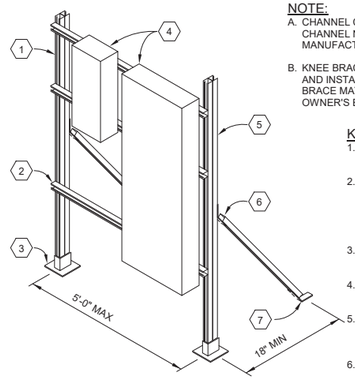

NOTE:
A. CHANNEL CONNECTIONS MUST BE MADE BY CHANNEL NUTS AND HARDWARE BY CHANNEL MANUFACTURER.
B. KNEE BRACE MUST BE CUT TO SUIT IN THE FIELD AND INSTALLED TO AVOID INTERFERENCES. KNEE BRACE MAY BE OMITTED IF APPROVED BY OWNER'S ENGINEERING REPRESENTATIVE.

KEYNOTES:
1. TYPICAL VERTICAL SUPPORT, MIN OF TWO PER RACK, 1 5/8"x3 1/4" CHANNEL.
2. TYPICAL HORIZONTAL SUPPORT, MIN OF TWO PER RACK, SPACED AS REQUIRED BY EQUIPMENT MOUNTING HOLES, 1 5/8" SQUARE SLOTTED CHANNEL.
3. POST BASE, LAG BOLTED TO CONCRETE PAD.
4. ELECTRICAL AND COMM EQUIPMENT AS PER PLAN DWGS.
5. TYPICAL FOUR HOLE 45 DEGREE OPEN ANGLE, BOLTED TO VERTICAL SUPPORT.
6. KNEE BRACE, 1 5/8" SQUARE SLOTTED CHANNEL.
7. TYPICAL FOUR HOLE 45 DEGREE OPEN ANGLE, LAG BOLTED TO FLOOR.

E3 FREE STANDING EQUIPMENT RACK CONSTRUCTION

SCALE NTS

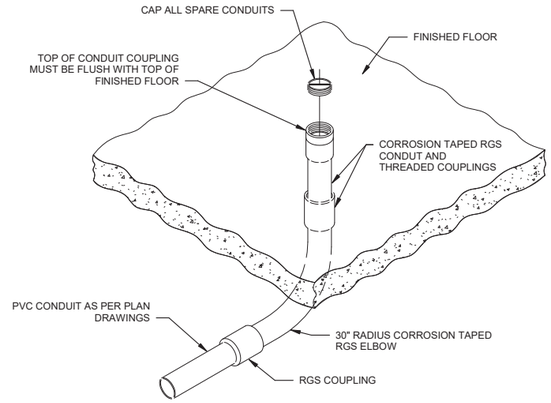

E6 POURED CONCRETE FLOOR CONDUIT STUB-UP

SCALE NTS

KEYNOTES:
1. 1/8" HOLE FOR POP RIVET, (TYP FOR 2).

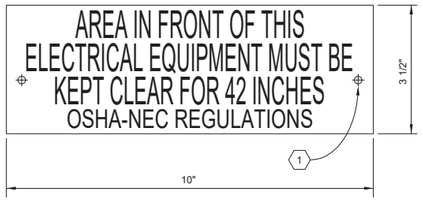

TOP 3 ROWS: 3/4" LETTERS
BOTTOM ROW: 1/2" LETTERS
BLACK LETTERING ON YELLOW BACKGROUND

C1 OSHA/NEC PLACARD

SCALE NTS

NOTES:
A. ACTIVATION OF THE EPO MUST SHUT DOWN POWER TO EACH CABINET AND CRAC UNIT IN THAT ROOM. INSTALL THE EPO SYSTEM TO MEET THESE REQUIREMENTS. PROVIDE EPO WITH ENOUGH CONTACTS TO MEET THESE REQUIREMENTS.
B. PROVIDE CONDUIT AND CONDUCTORS NECESSARY TO PROVIDE A FUNCTIONAL EPO SYSTEM.
C. EPO MUST PROVIDE SIGNAL TO CLOSE THE DAMPERS IN THAT LAB ROOM.

C4 TYPICAL EPO WIRING DIAGRAM

SCALE NTS

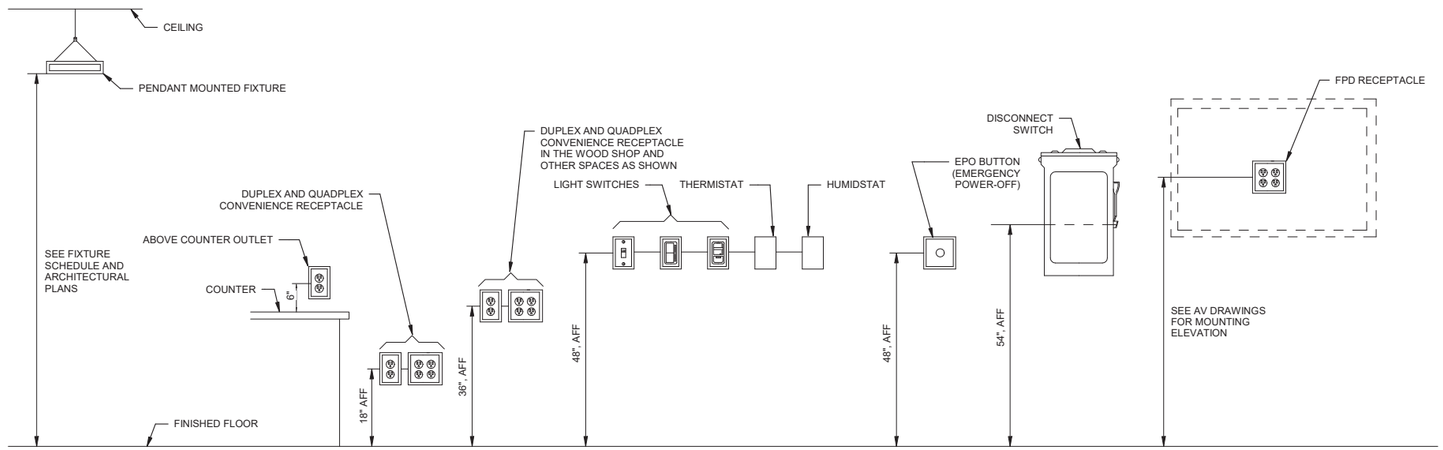

1 MOUNTING HEIGHTS

SCALE NTS

MARK OSSANNA
PE.93786
REGISTERED
PROFESSIONAL ENGINEER
STATE OF OHIO

MARK	DESCRIPTION	DATE

ISSUE DATE: MAY 2026
ANG PROJECT NO.: PBXP22050
CONTRACT NO.: FA8803-21-D-0008
TASK ORDER NO.: W50S8R23F0009

DESIGNED BY: M. OSSANNA
DRAWN BY: K. LONBECK
CHECKED BY: B. MITAROTONDA
SUBMITTED BY: S. PEARSON
SIZE: ANSI D

OHIO AIR NATIONAL GUARD
MANSFIELD LAHM AIR NATIONAL GUARD BASE, OH

JACOBS GOVERNMENT SERVICES
2600 MICHELSON SR. STE 500
IRVINE, CA 92612

MANSFIELD LAHM AIR NATIONAL GUARD BASE, OH
REPAIR B403 FOR CYBER
FA877006
ELECTRICAL EQUIPMENT DETAILS

SHEET ID
E-503

TYPE B-3 FINAL

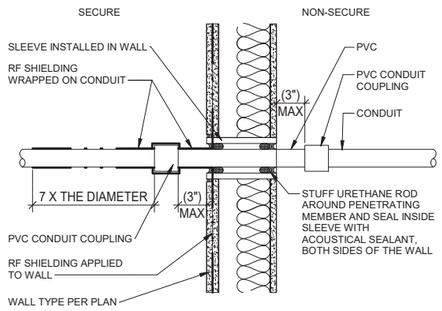

E1 CONDUIT PENETRATION THRU WALL

SCALE NTS

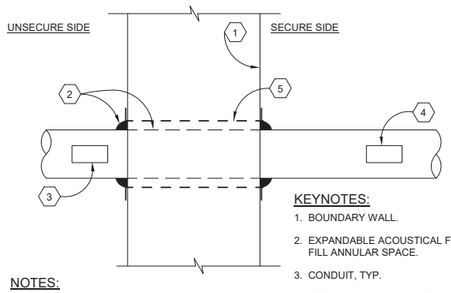

NOTES:

A. PROVIDE AT SECURE WALL PENETRATIONS.

KEYNOTES:

1. BOUNDARY WALL.
2. EXPANDABLE ACOUSTICAL FOAM SEALANT, FILL ANNULAR SPACE.
3. CONDUIT, TYP.
4. APPLY NAMEPLATE LABEL TO EACH CONDUIT IDENTIFYING SYSTEM (POWER, LIGHTING, COMM, ETC.) AND CIRCUIT #'S IF APPLICABLE. REFER TO SPECIFICATIONS FOR MORE INFORMATION.
5. OVERSIZE SLEEVE.

E4 CONDUIT/STC45/STC50 WALL PENETRATION

SCALE NTS

STATE OF OHIO
MARK OSSANNA
PE.93786
REGISTERED
PROFESSIONAL ENGINEER

MARK	DESCRIPTION	DATE

DESIGNED BY: M. OSSANNA
DRAWN BY: K. LONBECK
CHECKED BY: B. MITAROTONDA
SUBMITTED BY: S. PEARSON
SIZE: ANSI D

ISSUE DATE: MAY 2026
ANG PROJECT NO.: PBXP222050
CONTRACT NO.: FA8803-21-D-0008
TASK ORDER NO.: W50S8R23F0009

OHIO AIR NATIONAL GUARD
MANSFIELD LAHM AIR NATIONAL GUARD BASE, OH

JACOBS GOVERNMENT SERVICES
2600 MICHELSON SR, STE 500
IRVINE, CA 92812

MANSFIELD LAHM AIR NATIONAL GUARD BASE, OH
REPAIR B403 FOR CYBER
FA8777006
ELECTRICAL SECURITY DETAILS

SHEET ID

E-504

TYPE B-3 FINAL

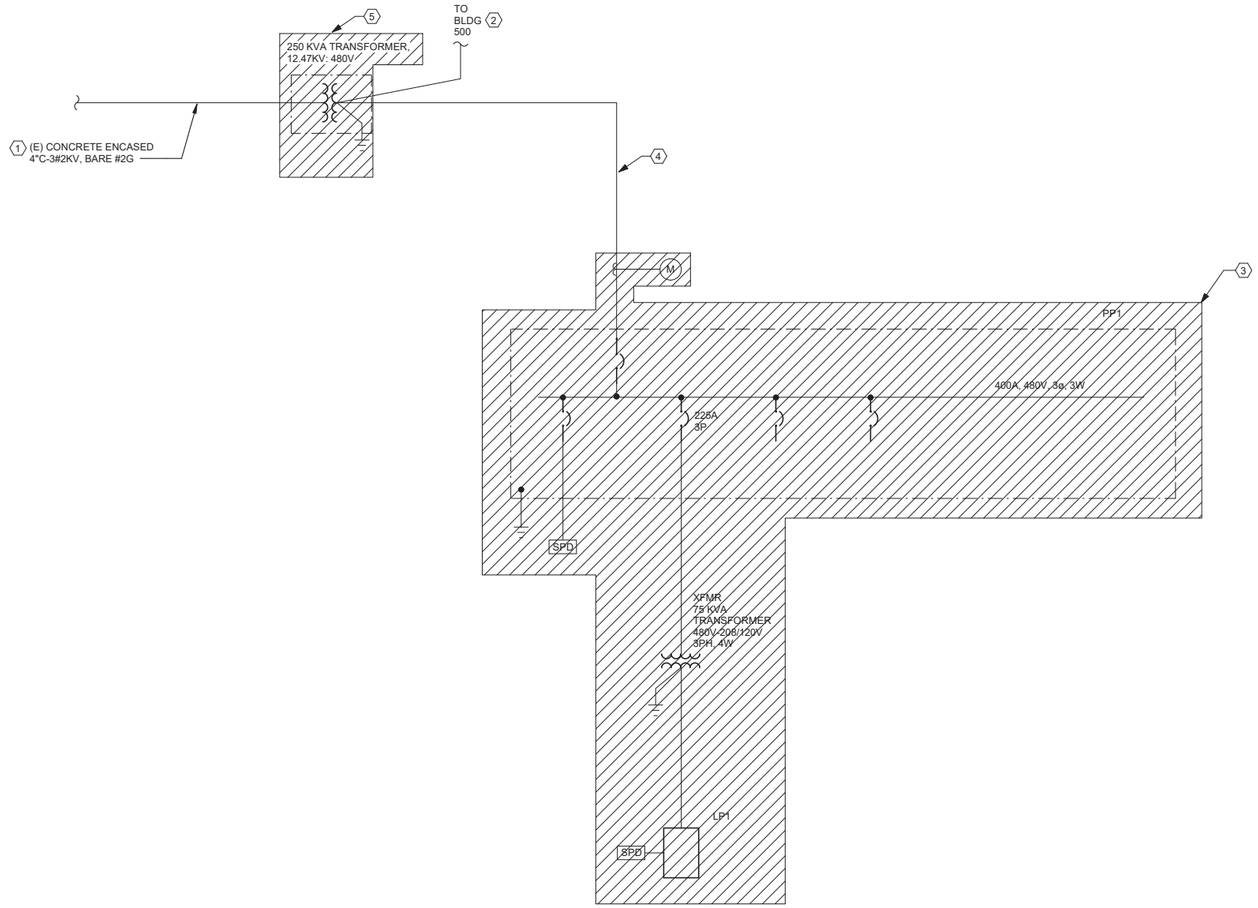

A1 ONE-LINE DIAGRAM - DEMOLITION

SCALE NTS

GENERAL SHEET NOTES

A. DEMOLITION OF EQUIPMENT MUST INCLUDE ASSOCIATED CONDUIT, CONDUCTORS, JUNCTION BOXES, STARTERS, SUPPORTS AND DISCONNECT SWITCHES.

B. REFER TO ARCHITECTURAL DRAWINGS FOR REQUIREMENTS FOR REPAIRING WALL, FLOORING AND ROOF PENETRATIONS.

⟨#⟩ SHEET KEYNOTES

1. PRESERVE AND PROTECT EXISTING 12.47KV UNDERGROUND PRIMARY FEEDER.
2. PRESERVE AND PROTECT EXISTING UNDERGROUND SECONDARY TO BUILDING 500.
3. DEMOLISH EXISTING EQUIPMENT LOCATED IN ELECTRICAL ROOM.
4. DEMOLISH EXISTING UNDERGROUND SECONDARY CONDUCTORS. EXISTING UNDERGROUND CONDUIT MAY BE CAPPED AND ABANDONED IN PLACE.
5. DEMOLISH EXISTING 225KVA PAD-MOUNT TRANSFORMER THAT SUPPLIES POWER TO BOTH BUILDINGS 403 AND 500. DEMOLISH ASSOCIATED CONCRETE PAD.

STATE OF OHIO
MARK OSSANNA
PE.93786
REGISTERED
PROFESSIONAL ENGINEER

MARK	DESCRIPTION	DATE

DESIGNED BY: M. OSSANNA
DRAWN BY: K. LONBECK
CHECKED BY: B. MITAROTONDA
SUBMITTED BY: S. PEARSON
SIZE: ANSI D
ISSUE DATE: MAY 2026
ANG PROJECT NO.: PBXP22030
CONTRACT NO.: FA8903-21-D-0008
TASK ORDER NO.: W50S8R23F0009

OHIO AIR NATIONAL GUARD
MANSFIELD LAHM AIR NATIONAL GUARD BASE, OH

JACOBS GOVERNMENT SERVICES
2600 MICHELSON SR, STE 500
IRVINE, CA 92612

MANSFIELD LAHM AIR NATIONAL GUARD BASE, OH
REPAIR B403 FOR CYBER
FA8777006
ELECTRICAL ONE-LINE DIAGRAM - DEMOLITION

SHEET ID
ED601

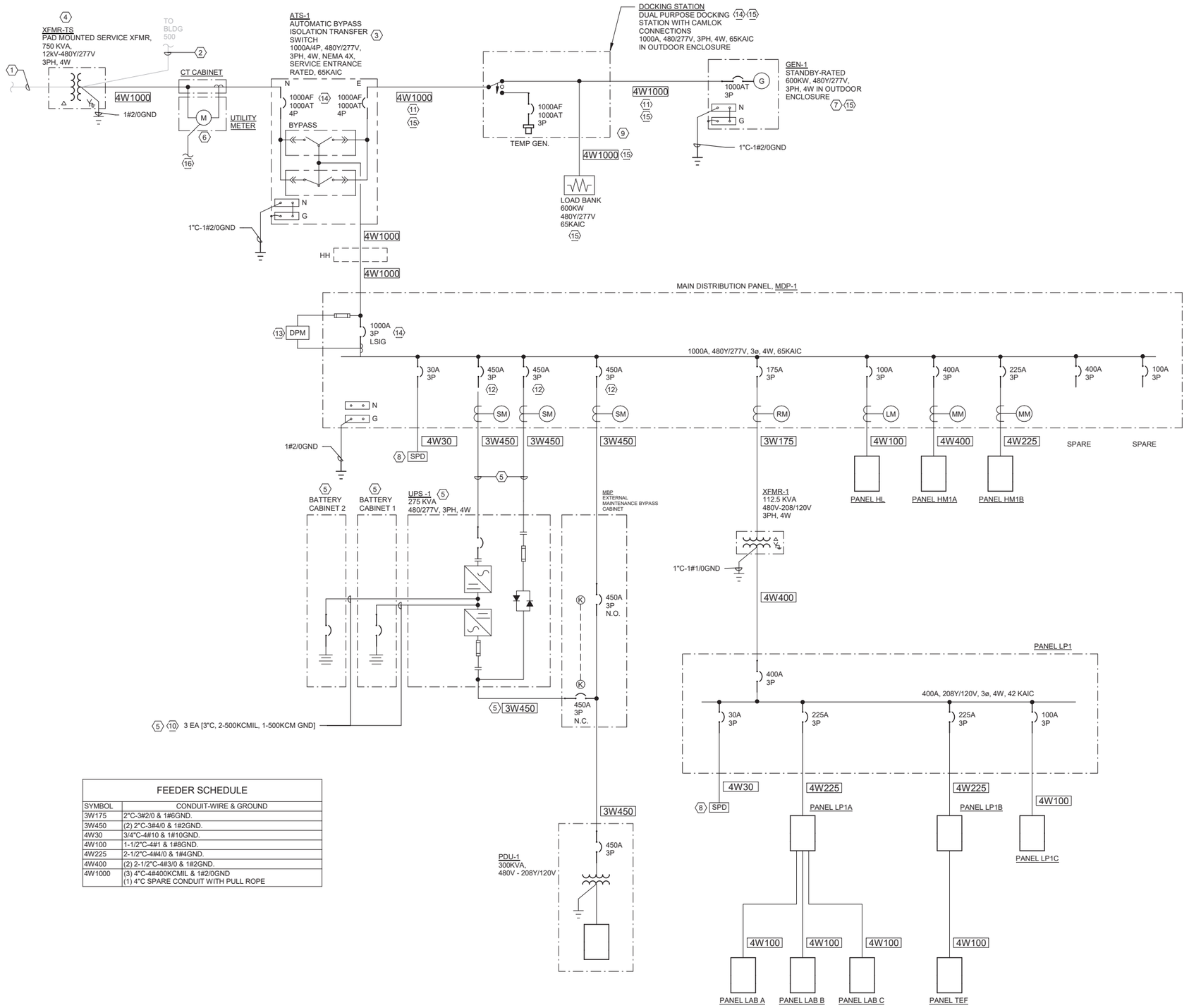

FEEDER SCHEDULE	
SYMBOL	CONDUIT-WIRE & GROUND
3W175	2°C-3#2/0 & 1#6GND.
3W450	(2) 2°C-3#4/0 & 1#2GND.
4W30	3/4°C-4#10 & 1#10GND.
4W100	1-1/2°C-4#1 & 1#8GND.
4W225	2-1/2°C-4#4/0 & 1#4GND.
4W400	(2) 2-1/2°C-4#3/0 & 1#2GND.
4W1000	(3) 4°C-4#400KCMIL & 1#2/0GND (1) 4°C SPARE CONDUIT WITH PULL ROPE

A1 ONE-LINE DIAGRAM

SCALE NTS

GENERAL SHEET NOTES

A. COORDINATE GFGI UPS SYSTEMS WITH CONTRACTING OFFICER PRIOR TO PURCHASING ELETRICAL EQUIPMENT.

(#) SHEET KEYNOTES

1. TERMINATE EXISTING 12.47KV PRIMARY FEEDER TO NEW PAD-MOUNT TRANSFORMER. PRIOR TO TERMINATING, MEDIUM-VOLTAGE CONDUCTORS MUST BE TESTED IN ACCORDANCE WITH NETA ATS REQUIREMENTS AND SPECIFICATION 33 71 02.
2. TERMINATE EXISTING BUILDING 500 FEEDER TO SECONDARY OF PAD-MOUNT TRANSFORMER.
3. PROVIDE SERVICE-ENTRANCE RATED AUTOMATIC TRANSFER SWITCH.
4. PROVIDE PAD-MOUNT TRANSFORMER WITH TWO SETS OF SECONDARY LUGS FOR TERMINATING BUILDING 500 AND 403.
5. UPS AND BATTERY CABINETS ARE GOVERNMENT FURNISHED, GOVERNMENT INSTALLED (GFGI). CONDUITS AND CONDUCTORS ASSOCIATED WITH THE UPS AND BATTERY SYSTEM ARE GFGI. COORDINATE REQUIRED CONDUCTOR SIZES WITH UPS MANUFACTURER PRIOR TO INSTALLATION.
6. PROVIDE SMART UTILITY METER AND CT ENCLOSURE IN NEMA 4X ENCLOSURES.
7. THE CONCRETE PAD FOR THE GENERATOR AND THE ASSOCIATED UNDERGROUND CONDUITS MUST BE PROVIDED AS PART OF THE BASE BID. COORDINATE WITH CONTRACTING OFFICER FOR STUB UP LOCATIONS IF BID OPTIONS 1 IS NOT AWARDED.
8. PROVIDE CIRCUIT BREAKER, CONNECTIONS, CONDUIT, AND WIRING PER MANUFACTORER'S REQUIREMENTS. SPD MUST BE INSTALLED EXTERIOR OF THE PANELBOARD.
9. PROVIDE A WARNING SIGN DISPLAYING "WARNING: FOR CONNECTION OF A SEPARATELY DERIVED (BONDED NEUTRAL) SYSTEM ONLY.
10. COORDINATE CONDUCTOR QUANTITY AND SIZE WITH UPS MANUFACTURER PRIOR TO INSTALLATION.
11. PROVIDE TWO ADDITIONAL 2" CONDUITS IN DUCTBANK. ONE CONDUIT WILL BE USED FOR GENERATOR CONTROL WIRING AND THE SECOND CONDUIT IS A SPARE.
12. PROVIDE SHUNT TRIP CIRCUIT BREAKER THAT HAS CONTACTS FOR TWO EPO PUSH BUTTONS. PROVIDE 120V POWER FROM CIRCUIT 22 IN PANEL LP1C. PROVIDE [3/4"C, 2#12, 1#12G] TO PANEL LP1C.
13. PROVIDE A DIGITAL METERING PACKAGE WITH FEEDER CIRCUIT MONITORING TO PERMIT RECORDING OF ENERGY CONSUMPTION PER ASHRAE 90.1_2019 PARAGRAPH 8.4.3. LOADS TO BE MONITORED ARE AS INDICATED BY THE SYMBOL SHOWN BELOW. PROVIDE ALL CONDUIT, CONDUCTORS, CURRENT TRANSFORMERS AND PROGRAMMING AS NECESSARY TO MEET THE REQUIREMENTS OF ASHRAE 90.1.

    LM = LIGHTING ENERGY
    MM = HVAC ENERGY
    RM = RECEPTACLE ENERGY
    SM = SERVER ENERGY

14. PROVIDE 100% RATED CIRCUIT BREAKER.
15. GENERATOR, DOCKING STATION, LOAD BANK AND ASSOCIATED CONDUCTORS MUST BE PROVIDED AS PART OF BID OPTION 1. UNDERGROUND CONDUITS SHOWN ON THE SITE PLAN MUST BE PROVIDED AS PART OF BASE BID. COORDINATE WITH CONTRACTING OFFICER FOR STUB UP LOCATIONS IF BID OPTIONS 1 IS NOT AWARDED.
16. PROVIDE A 1" CONDUIT FROM THE ELECTRICAL ROOM AND STUBBED UP AT THE UTILITY METER FOR COMMUNICATIONS TO THE SMART METER.

STATE OF OHIO
MARK OSSANNA
PE.93786
REGISTERED
PROFESSIONAL ENGINEER

MARK	DESCRIPTION	DATE

DESIGNED BY: M. OSSANNA
DRAWN BY: K. LONBECK
CHECKED BY: B. MITAROTONDA
SUBMITTED BY: S.PEARSON
SIZE: ANSI D
ISSUE DATE: MAY 2026
ANG PROJECT NO.: PBXP22050
CONTRACT NO.: FA8803-21-D-0008
TASK ORDER NO.: W50S8R23F0009

OHIO AIR NATIONAL GUARD
MANSFIELD LAHM AIR NATIONAL GUARD BASE, OH

JACOBS GOVERNMENT SERVICES
2600 MICHELSON SR, STE 500
IRVINE, CA 92612

MANSFIELD LAHM AIR NATIONAL GUARD BASE, OH
REPAIR B403 FOR CYBER
FA877006
ELECTRICAL ONE-LINE DIAGRAM

SHEET ID
E-601

EQUIPMENT CONNECTION SCHEDULE

EQUIPMENT TAG	VOLTAGE	POLES	BREAKER	POWER	WIRE AND CONDUIT	CIRCUIT	LOCAL EQUIPMENT DISCONNECT TYPE	LOCATION	NOTES
AASD-A	120 V	1	20 A	100 VA	3/4"C-2#12, 1#12GND.	LAB A:8	INTEGRAL DISCONNECT	LAB A 1007	
AASD-B	120 V	1	20 A	100 VA	3/4"C-2#12, 1#12GND.	LAB B:5	INTEGRAL DISCONNECT	LAB B 1008	
AASD-C	120 V	1	20 A	100 VA	3/4"C-2#12, 1#12GND.	LAB C:7	INTEGRAL DISCONNECT	LAB C 1009	
AASD-TEF	120 V	1	20 A	100 VA	3/4"C-2#12, 1#12GND.	TEF:15	INTEGRAL DISCONNECT	TEF 1006	
AC-1	480 V	3	70 A	38576 VA	1-1/4"C-3#3 & 1#8GND.	HM1B:25,27,29	DISCONNECT PROVIDED BY DIV 26	EXTERIOR (EAST)	
ACCU-1	480 V	3	15 A	1164 VA	1"C-3#12 & 1#12GND.	HM1B:1,3,5	DISCONNECT PROVIDED BY DIV 26	EXTERIOR (NORTH-WEST)	
ACCU-2	480 V	3	15 A	1164 VA	1"C-3#12 & 1#12GND.	HM1B:8,10,12	DISCONNECT PROVIDED BY DIV 26	EXTERIOR (NORTH-WEST)	
ACCU-3	480 V	3	15 A	1164 VA	1"C-3#12 & 1#12GND.	HM1B:7,9,11	DISCONNECT PROVIDED BY DIV 26	EXTERIOR (NORTH-WEST)	
ACCU-4	480 V	3	15 A	1164 VA	1"C-3#12 & 1#12GND.	HM1B:14,16,18	DISCONNECT PROVIDED BY DIV 26	EXTERIOR (SOUTH-WEST)	
ACCU-5	480 V	3	15 A	1164 VA	1"C-3#12 & 1#12GND.	HM1B:13,15,17	DISCONNECT PROVIDED BY DIV 26	EXTERIOR (SOUTH-WEST)	
ACCU-6	480 V	3	15 A	1164 VA	1"C-3#12 & 1#12GND.	HM1B:20,22,24	DISCONNECT PROVIDED BY DIV 26	EXTERIOR (SOUTH-WEST)	
ACCU-7	480 V	3	15 A	1164 VA	1"C-3#12 & 1#12GND.	HM1B:19,21,23	DISCONNECT PROVIDED BY DIV 26	EXTERIOR (SOUTH-WEST)	
ACCU-8	480 V	3	15 A	1164 VA	1"C-3#12 & 1#12GND.	HM1B:26,28,30	DISCONNECT PROVIDED BY DIV 26	EXTERIOR (SOUTH-WEST)	
ACS-1	120 V	1	20 A	500 VA	3/4"C-2#12 & 1#12GND.	TEF:11	N/A	TEF 1006	
ACS-2	120 V	1	20 A	500 VA	3/4"C-2#12 & 1#12GND.	LP1C:25	N/A	VESTIBULE 1000	
CAMERA-1	120 V	1	20 A	200 VA	3/4"C-2#12, 1#12GND.	LP1C:23	N/A		
CAMERA-2	120 V	1	20 A	200 VA	3/4"C-2#12, 1#12GND.	LP1C:23	N/A		
CAMERA-3	120 V	1	20 A	200 VA	3/4"C-2#12, 1#12GND.	LP1C:23	N/A		
CONTROL-1	120 V	1	20 A	300 VA	3/4"C-2#12, 1#12GND.	LP1B:12	PROVIDE 30A MOTOR RATED SWITCH.	OPEN OFFICE 1001	DEDICATED CIRCUIT FOR HVAC CONTROLS.
CONTROL-2	120 V	1	20 A	300 VA	3/4"C-2#12, 1#12GND.	LP1B:14	PROVIDE 30A MOTOR RATED SWITCH.	TEF 1006	DEDICATED CIRCUIT FOR HVAC CONTROLS.
CONTROL-3	120 V	1	20 A	300 VA	3/4"C-2#12, 1#12GND.	LP1C:24	PROVIDE 30A MOTOR RATED SWITCH.	ELEC 1018	DEDICATED CIRCUIT FOR HVAC CONTROLS.
CRAC-1	480 V	3	50 A	23611 VA	1"C-3#6 & 1#10GND.	HM1A:1,3,5	INTEGRAL DISCONNECT	LAB A 1007	
CRAC-2	480 V	3	50 A	23611 VA	1"C-3#6 & 1#10GND.	HM1A:8,10,12	INTEGRAL DISCONNECT	LAB B 1008	
CRAC-3	480 V	3	50 A	23611 VA	1"C-3#6 & 1#10GND.	HM1A:7,9,11	INTEGRAL DISCONNECT	LAB C 1009	
CRAC-4	480 V	3	50 A	23611 VA	1"C-3#6 & 1#10GND.	HM1A:14,16,18	INTEGRAL DISCONNECT	TEF 1006	
CRAC-5	480 V	3	50 A	23611 VA	1"C-3#6 & 1#10GND.	HM1A:13,15,17	INTEGRAL DISCONNECT	TEF 1006	
CRAC-6	480 V	3	50 A	23611 VA	1"C-3#6 & 1#10GND.	HM1A:20,22,24	INTEGRAL DISCONNECT	TEF 1006	
CRAC-7	480 V	3	50 A	23611 VA	1"C-3#6 & 1#10GND.	HM1A:19,21,23	INTEGRAL DISCONNECT	TEF 1006	
CRAC-8	480 V	3	50 A	23611 VA	1"C-3#6 & 1#10GND.	HM1A:26,28,30	INTEGRAL DISCONNECT	TFF 1006	
DDC	120 V	1	20 A	600 VA	3/4"C-2#12, 1#12GND.	TEF:14	N/A	TEF 1006	
DOCKING STATION	120 V	1	20 A	600 VA	1"C-2#12, 1#12GND.	LP1C:26	N/A	TEF 1006	BID OPTION 1. DEDICATED 120V CIRCUIT FOR HEATER STRIP. PROVIDE ONE SPARE 1" UNDERGROUND CONDUIT.
EF-1	208 V	2	15 A	100 VA	3/4"C-2#12 & 1#12GND.	LP1B:11,13	INTEGRAL DISCONNECT	RESTROOMS	
EF-2	208 V	2	15 A	500 VA	3/4"C-2#12 & 1#12GND.	LAB A:13,15	INTEGRAL DISCONNECT	LAB A 1007	
EF-3	208 V	2	20 A	500 VA	3/4"C-2#12 & 1#12GND.	LAB B:7,9	INTEGRAL DISCONNECT	LAB B 1008	
EF-4	208 V	2	15 A	500 VA	3/4"C-2#12 & 1#12GND.	LAB C:9,11	INTEGRAL DISCONNECT	LAB C 1009	
EF-5	208 V	2	15 A	500 VA	3/4"C-2#12 & 1#12GND.	TEF:17,19	INTEGRAL DISCONNECT	TEF 1006	
EWH-1	480 V	3	30 A	16000 VA	3/4"C-3#10 & 1#10GND.	HM1A:25,27,29	3P30A DISCONNECT SWITH, NEMA 1	BREAK 1002	
EWH-2	480 V	3	30 A	16000 VA	3/4"C-3#10 & 1#10GND.	HM1A:32,34,36	3P30A DISCONNECT SWITH, NEMA 1	RESTROOM 1013	
EWH-3	480 V	3	40 A	20000 VA	3/4"C-3#8 & 1#10GND.	HM1B:32,34,36	3P60A DISCONNECT SWITH, NEMA 1	FIRE RISER 1017	
FAT	120 V	1	20 A	100 VA	3/4"C-2#12, 1#12GND.	LP1C:8	N/A	FIRE RISER 1017	PROVIDE RED CIRCUIT BREAKER.
FC-1	208 V	2	40 A	1164 VA	3/4"C-2#8 & 1#10GND.	HP-1:1	2P30A, MOTOR RATED SWITCH, NEMA 1	ELEC 1018	PROVIDE WIRING PER MANUFACTURER REQUIREMENT. PROVIDE ADDITIONAL 1" CONDUIT FOR CONTROL WIRING. POWER PROVIDED BY HP-1
FC-2	208 V	2	20 A	1997 VA	3/4"C-2#12 & 1#12GND.	HP-2:1	2P30A, MOTOR RATED SWITCH, NEMA 1	FIRE RISER 1017	PROVIDE WIRING PER MANUFACTURER REQUIREMENT. PROVIDE ADDITIONAL 1" CONDUIT FOR CONTROL WIRING. POWER PROVIDED BY HP-2
FMCP	120 V	1	20 A	500 VA	3/4"C-2#12, 1#12GND.	LP1C:1	N/A	FIRE RISER 1017	PROVIDE RED CIRCUIT BREAKER.
FMSP	120 V	1	20 A	500 VA	3/4"C-2#12, 1#12GND.	LP1B:28	N/A	SECURITY 1016	PROVIDE RED CIRCUIT BREAKER.
FMSP-A	120 V	1	20 A	600 VA	3/4"C-2#12, 1#12GND.	LAB A:14		LAB A 1007	PROVIDE RED CIRCUIT BREAKER.
FMSP-B	120 V	1	20 A	600 VA	3/4"C-2#12, 1#12GND.	LAB B:17		LAB B 1008	PROVIDE RED CIRCUIT BREAKER.
FMSP-C	120 V	1	20 A	600 VA	3/4"C-2#12, 1#12GND.	LAB C:13		LAB C 1009	PROVIDE RED CIRCUIT BREAKER.
FOLDING PARTITION	208 V	3	20 A	3603 VA	3/4"C-3#12 & 1#12GND.	LP1B:43,45,47	DISCONNECT FURNISHED WITH EQUIPMENT.	CONF 1015	
FSCP	120 V	1	20 A	500 VA	3/4"C-2#12, 1#12GND.	LP1C:14	N/A	FIRE RISER 1017	PROVIDE RED CIRCUIT BREAKER.
GENERATOR-BAT CHARGER	120 V	1	20 A	240 VA	1"C-2#12 & 1#12GND.	LP1C:17	DISCONNECT FURNISHED WITH EQUIPMENT.	GENERATOR	BID OPTION 1. PROVIDE ONE SPARE 1" UNDERGROUND CONDUIT
GENERATOR-HEATER	120 V	1	20 A	1200 VA	1"C-2#12 & 1#12GND.	LP1C:16	DISCONNECT FURNISHED WITH EQUIPMENT.	GENERATOR	BID OPTION 1.
HP-1	208 V	2	40 A	1164 VA	3/4"C-2#8 & 1#10GND.	LP1C	2P30A, MOTOR RATED SWITCH, NEMA 4X	EXTERIOR	
HP-2	208 V	2	20 A	1997 VA	3/4"C-2#12 & 1#12GND.	LP1C	2P30A, MOTOR RATED SWITCH, NEMA 4X	EXTERIOR	
IDS-1	120 V	1	20 A	500 VA	3/4"C-2#12 & 1#12GND.	TEF:13	N/A	TEF 1006	
IDS-2	120 V	1	20 A	500 VA	3/4"C-2#12 & 1#12GND.	LP1C:27	N/A	VESTIBULE 1000	
UH-1	208 V	2	30 A	4300 VA	3/4"C-2#10, 1#10GND.	LP1B:37,39	2P30A DISCONNECT SWITH, NEMA 1	TEF 1006	
UH-2	208 V	2	15 A	500 VA	3/4"C-2#12 & 1#12GND.	LP1C:29,31	PROVIDE 30A MOTOR RATED SWITCH.	VESTIBULE 1000	
UH-3	208 V	2	15 A	500 VA	3/4"C-2#12 & 1#12GND.	LP1B:36,38	PROVIDE 30A MOTOR RATED SWITCH.	RESTROOM 1013	
UH-4	208 V	2	15 A	500 VA	3/4"C-2#12 & 1#12GND.	LP1B:36,38	PROVIDE 30A MOTOR RATED SWITCH.	RESTROOM 1012	
VAV	120 V	1	20 A	300 VA	3/4"C-2#12, 1#12GND.	LP1B:7	PROVIDE 30A MOTOR RATED SWITCH.	OPEN OFFICE 1001	ROUTE FEEDER TO 120V-24V TRANSFORMER PROVIDED WITH VAV UNITS.

STATE OF OHIO
MARK OSSANNA
PE.93786
REGISTERED
PROFESSIONAL ENGINEER

MARK	DESCRIPTION	DATE

DESIGNED BY: M. OSSANNA
DRAWN BY: K. LONBECK
CHECKED BY: B. MITAROTONDA
SUBMITTED BY: D. PEARSON
SIZE: ANSI D
ISSUE DATE: MAY 2026
ANG PROJECT NO.: PBXP22050
CONTRACT NO.: FA8903-21-D-0008
TASK ORDER NO.: W50S8R23F0009

OHIO AIR NATIONAL GUARD
MANSFIELD LAHM AIR NATIONAL GUARD BASE, OH

JACOBS GOVERNMENT SERVICES
2600 MICHELSON SR, STE 500
IRVINE, CA 92612

MANSFIELD LAHM AIR NATIONAL GUARD BASE, OH
REPAIR B403 FOR CYBER
FA877006
ELECTRICAL EQUIPMENT CONNNECTION SCHEDULE

SHEET ID

E-610

MDP-1

LOCATION: ELEC 1018
SUPPLY FROM: MAIN SERVICE CENTER
MOUNTING: FLOOR MOUNTED
ENCLOSURE: NEMA 1

VOLTAGE: 480/277V,3P,4W,60HZ
MAINS TYPE: 1000 A
TRIP SIZE: 1000 A

INTERRUPTING RATING (kA SYMMETRICAL): 65,000
MINIMUM BUS RATING: 1000 A
NEUTRAL BUS RATING: 1000 A

CKT NO.	DESCRIPTIONS	LOAD CLASSIFICATION	POLES	FRAME (AMPS)	TRIP (AMPS)	LOAD (VOLT-AMPS)	COMMENTS
1	SPD (SEE NOTE 1)	--	3	100 A	60 A	0 VA	
2	UPS-1	SERVER	3	800 A	450 A	240000 VA	NOTE 2
3	UPS INTERNAL BYPASS	--	3	800 A	450 A	0 VA	NOTE 2
4	UPS EXTERNAL BYPASS	--	3	800 A	450 A	0 VA	NOTE 2
5	XFMR T1	LTS; HVAC; REC; WORKSTATION; OTHE...	3	225 A	175 A	100422 VA	
6	PANEL HL	LTS;	3	100 A	100 A	4040 VA	
7	PANEL HM1A	HVAC;	3	400 A	400 A	220890 VA	
8	PANEL HM1B	LTS; HVAC;	3	100 A	100 A	68478 VA	
9	SPARE	--	3	400 A	400 A	0 VA	
10	SPARE	--	3	100 A	100 A	0 VA	
11	SPACE	--	1	--	--	--	
12	SPACE	--	1	--	--	--	

LOAD CLASSIFICATION	CONNECTED LOAD	DEMAND FACTOR	ESTIMATED DEMAND
HVAC	301795 VA	100.00%	301795 VA
LTS	4754 VA	100.00%	4754 VA
REC	22760 VA	71.97%	16380 VA
OTHER.	12923 VA	100.00%	12923 VA
WORKSTATION	36600 VA	100.00%	36600 VA
SERVER	255000 VA	100.00%	255000 VA

TOTAL LOAD SUMMARY			
LOAD (KVA)		CURRENT (AMPS)	
CONNECTED LOAD:	633.8 kVA	CONNECTED CURRENT:	762.4 A
ESTIMATED DEMAND LOAD:	627.5 kVA	ESTIMATED DEMAND CURRENT:	754.7 A
CALCULATED DEMAND FACTOR:	98.99%		
SPARE CAPACITY FACTOR:	15%	SPARE CAPACITY FACTOR	15%
SPARE LOAD:	94118 VA	SPARE LOAD:	113 A
DEMAND LOAD WITH SPARE:	721569 VA	DEMAND LOAD WITH SPARE:	755 A

PANELBOARD NOTES:
1. FOLLOW MANUFACTURER'S INSTRUCTIONS FOR FINAL INSTALLATION REQUIREMENTS OF SPD.
2. PROVIDE SHUNT TRIP CIRCUIT BREAKER. REFER TO ONE-LINE FOR MORE INFORMATION.

HL

LOCATION: OPEN OFFICE 1001
SUPPLY FROM: MDP-1
MOUNTING: SURFACE
ENCLOSURE: TYPE 1

VOLTAGE: 480/277V, 3-PHASE, 4-WIRE
MAINS TYPE: 100 A
TRIP SIZE: 100 A

INTERRUPTING RATING: 42,000
GROUND BUS: EQUIP. ONLY
NEUTRAL BUS RATING: 100%

NOTES	LOAD CLASS	LOAD NAME	TRIP	POLES	CKT NO	A (VA)	B (VA)	C (VA)	A (VA)	B (VA)	C (VA)	CKT NO	POLES	TRIP	LOAD NAME	LOAD CLASS	NOTES
	LTS	L-CIRCULATIONS 1011&1012	20 A	1	1	83			0			2	3	30 A	SPD (SEE NOTE 1)	--	
	LTS	L-LAB C	20 A	1	3		269			0		4	--	--	--	--	
	LTS	L-LAB A 1008	20 A	1	5			134			0	6	--	--	--	--	
	LTS	L-LAB B	20 A	1	7	134			228			8	1	20 A	L-OFFICES 1003, 1004, 1005	LTS	
	LTS	L-TEF 1007	20 A	1	9		303			76		10	1	20 A	L-SECURITY 1016	LTS	
	LTS	L-BREAK 1002	20 A	1	11			166			1294	12	1	20 A	L-OPEN OFFICE	LTS	
	--	SPARE	20 A	1	13	0			1006			14	1	20 A	L-CONF 1015 & 1016	LTS	
	--	SPARE	20 A	1	15		0			347		16	1	20 A	L-RESTROOMS	LTS	
	--	SPARE	20 A	1	17			0			0	18	1	20 A	SPARE	--	
	--	SPARE	20 A	1	19	0			0			20	1	20 A	SPARE	--	
	--	SPACE	--	1	21		--			--		22	1	--	SPACE	--	
	--	SPACE	--	1	23			--			--	24	1	--	SPACE	--	

LOAD TYPES	CONNECTED LOADS	DEMAND FACTORS	DEMAND LOADS
LTS	4040 VA	100.00%	4040 VA

TOTAL LOAD SUMMARY	
LOAD (VA)	LOAD (AMPS)
CONNECTED LOAD PHASE A: 1451 VA	CONNECTED LOAD PHASE A: 5.5 A
CONNECTED LOAD PHASE B: 994 VA	CONNECTED LOAD PHASE B: 3.6 A
CONNECTED LOAD PHASE C: 1595 VA	CONNECTED LOAD PHASE C: 6.0 A
CONNECTED LOAD: 4040 VA	**CONNECTED LOAD: 4.9 A**
SPARE CAPACITY FACTOR: 15%	SPARE CAPACITY FACTOR: 15%
DEMAND LOAD: 4040.2 VA	DEMAND LOAD: 4.9 A
SPARE LOAD: 606 VA	SPARE LOAD: 1 A
DEMAND LOAD WITH SPARE: 4646 VA	**DEMAND LOAD WITH SPARE: 6 A**

SCHEDULE NOTES: 1. FOLLOW MANUFACTURER'S INSTRUCTIONS FOR FINAL INSTALLATION REQUIREMENTS OF SPD.

LP1

LOCATION: ELEC 1018
SUPPLY FROM: T-1
MOUNTING: SURFACE
ENCLOSURE: TYPE 1

VOLTAGE: 208/120V, 3-PHASE, 4-WIRE
MAINS TYPE: 400 A
TRIP SIZE: 400 A

INTERRUPTING RATING: 42,000
GROUND BUS: EQUIP. ONLY
NEUTRAL BUS RATING: 100%

NOTES	LOAD CLASS	LOAD NAME	TRIP	POLES	CKT NO	A (VA)	B (VA)	C (VA)	A (VA)	B (VA)	C (VA)	CKT NO	POLES	TRIP	LOAD NAME	LOAD CLASS	NOTES
	HVAC; REC;...	PANEL "LP1A"	225 A	3	1	15840			0			2	3	30 A	SPD (SEE NOTE 1)	--	
	--	--	--	--	3		15090			0		4	--	--	--	--	
	--	--	--	--	5			14590			0	6	--	--	--	--	
	HVAC; REC;...	PANEL "LP1C"	100 A	3	7	4112			17707			8	3	225 A	PANEL "LP1B"	LTS; HVAC; REC...	
	--	--	--	--	9		3658			14711		10	--	--	--	--	
	--	--	--	--	11			3330			11384	12	--	--	--	--	
	--	SPARE	100 A	3	13	0			0			14	1	20 A	SPARE	--	
	--	--	--	--	15		0			0		16	1	20 A	SPARE	--	
	--	--	--	--	17			0			0	18	1	20 A	SPARE	--	
	--	SPARE	60 A	3	19	0			--			20	1	--	SPACE	--	
	--	--	--	--	21		0			--		22	1	--	SPACE	--	
	--	--	--	--	23			0			--	24	1	--	SPACE	--	

LOAD TYPES	CONNECTED LOADS	DEMAND FACTORS	DEMAND LOADS
HVAC	13017 VA	100.00%	13017 VA
LTS	123 VA	100.00%	123 VA
OTHER.	12923 VA	100.00%	12923 VA
REC	22760 VA	71.97%	16380 VA
WORKSTATION	36600 VA	100.00%	36600 VA
SERVER	15000 VA	100.00%	15000 VA

TOTAL LOAD SUMMARY	
LOAD (VA)	LOAD (AMPS)
CONNECTED LOAD PHASE A: 37659 VA	CONNECTED LOAD PHASE A: 319.2 A
CONNECTED LOAD PHASE B: 33459 VA	CONNECTED LOAD PHASE B: 284.2 A
CONNECTED LOAD PHASE C: 29304 VA	CONNECTED LOAD PHASE C: 244.2 A
CONNECTED LOAD: 100422 VA	**CONNECTED LOAD: 278.7 A**
SPARE CAPACITY FACTOR:	SPARE CAPACITY FACTOR:
DEMAND LOAD: 94042.5 VA	DEMAND LOAD: 261.0 A
SPARE LOAD: 0 VA	SPARE LOAD: 0 A
DEMAND LOAD WITH SPARE: 94042 VA	**DEMAND LOAD WITH SPARE: 261 A**

SCHEDULE NOTES: 1. FOLLOW MANUFACTURER'S INSTRUCTIONS FOR FINAL INSTALLATION REQUIREMENTS OF SPD.

STATE OF OHIO
MARK OSSANNA
PE.93786
REGISTERED
PROFESSIONAL ENGINEER

MARK	DESCRIPTION	DATE

DESIGNED BY: M. OSSANNA
DRAWN BY: K. LONBECK
CHECKED BY: B. MITAROTONDA
SUBMITTED BY: S. PEARSON
QA/QC: ANSI D

ISSUE DATE: MAY 2026
ANG PROJECT NO.: PBXP22050
CONTRACT NO.: FA8803-21-D-0008
TASK ORDER NO.: W50SBR23F0009

OHIO AIR NATIONAL GUARD
MANSFIELD LAHM AIR NATIONAL GUARD BASE, OH

JACOBS GOVERNMENT SERVICES
2600 MICHELSON SR, STE 500
IRVINE, CA 92812

MANSFIELD LAHM AIR NATIONAL GUARD BASE, OH
REPAIR B403 FOR CYBER
FA877006
ELECTRICAL PANEL SCHEDULES

SHEET ID
E-611

LP1A

LOCATION: OPEN OFFICE 1001
SUPPLY FROM: LP1
MOUNTING: SURFACE
ENCLOSURE: TYPE 1

VOLTAGE: 208/120V, 3-PHASE, 4-WIRE
MAINS TYPE: 225 A
TRIP SIZE: 225 A

INTERRUPTING RATING: 22,000
GROUND BUS: EQUIP. ONLY
NEUTRAL BUS RATING: 100%

NOTES	LOAD CLASS	LOAD NAME	TRIP	POLES	CKT NO	A (VA)	B (VA)	C (VA)	A (VA)	B (VA)	C (VA)	CKT NO	POLES	TRIP	LOAD NAME	LOAD CLASS	NOTES
	HVAC; REC;...	PANEL "LAB A"	100 A	3	1	2790			0			2	3	30 A	SPD (SEE NOTE 1)	--	
	--	--	--	--	3		2150			0		4	--	--	--	--	
	--	--	--	--	5			1840			0	6	--	--	--	--	
	HVAC; REC;...	PANEL "LAB C"	100 A	3	7	3320			2630			8	3	100 A	PANEL "LAB B"	HVAC; REC;...	
	--	--	--	--	9		2810			1730		10	--	--	--	--	
	--	--	--	--	11			2810			1640	12	--	--	--	--	
					13							14					
	REC	RCPTS-CONFERENCE 1016	20 A	1	15		900			1600		16	3	20 A	FURN SYS OPEN OFFICE 1001	WORKSTATION	
	REC	RCPTS-CONF 1016 TABLE	20 A	1	17			1620			1600	18	--	--	--	--	
	REC	COPIER	20 A	1	19	1500			1600			20	--	--	--	--	
	REC	SHREDDER	20 A	1	21		1000			900		22	1	20 A	RCPTS-CONFERENCE 1015	REC	
	WORKSTATION	FURN - OPEN OFFICE 1001	20 A	3	23			800			1080	24	1	20 A	RCPTS-CON 1015 TABLE	REC	
	--	--	--	--	25	800			1600			26	3	20 A	FURN - OPEN OFFICE 1001	WORKSTATION	
	--	--	--	--	27		800			1600		28	--	--	--	--	
	--	SPARE	20 A	1	29			0			1600	30	--	--	--	--	
	--	SPARE	100 A	3	31	0			1600			32	3	20 A	FURN - OPEN OFFICE 1001	WORKSTATION	
	--	--	--	--	33		0			1600		34	--	--	--	--	
	--	--	--	--	35			0			1600	36	--	--	--	--	
	--	SPARE	20 A	1	37	0			0			38	1	20 A	SPARE	--	
	--	SPARE	20 A	1	39		0			0		40	1	20 A	SPARE	--	
	--	SPACE	--	1	41			--			--	42	1	--	SPACE	--	

LOAD TYPES	CONNECTED LOADS	DEMAND FACTORS	DEMAND LOADS
HVAC	1500 VA	100.00%	1500 VA
OTHER.	2220 VA	100.00%	2220 VA
REC	9700 VA	100.00%	9700 VA
WORKSTATION	32100 VA	100.00%	32100 VA

TOTAL LOAD SUMMARY

LOAD (VA)	LOAD (AMPS)
CONNECTED LOAD PHASE A: 15840 VA	CONNECTED LOAD PHASE A: 132.6 A
CONNECTED LOAD PHASE B: 15090 VA	CONNECTED LOAD PHASE B: 126.4 A
CONNECTED LOAD PHASE C: 14590 VA	CONNECTED LOAD PHASE C: 121.6 A
CONNECTED LOAD: 45520 VA	**CONNECTED LOAD: 126.4 A**
SPARE CAPACITY FACTOR: 15%	SPARE CAPACITY FACTOR: 15.0%
DEMAND LOAD: 45520.0 VA	DEMAND LOAD: 126.4 A
SPARE LOAD: 6828 VA	SPARE LOAD: 19 A
DEMAND LOAD WITH SPARE: 52348 VA	**DEMAND LOAD WITH SPARE: 145 A**

SCHEDULE NOTES: 1. FOLLOW MANUFACTURER'S INSTRUCTIONS FOR FINAL INSTALLATION REQUIREMENTS OF SPD.

LP1B

LOCATION: OPEN OFFICE 1001
SUPPLY FROM: LP1
MOUNTING: SURFACE
ENCLOSURE: TYPE 1

VOLTAGE: 208/120V, 3-PHASE, 4-WIRE
MAINS TYPE: 225 A
TRIP SIZE: 225 A

INTERRUPTING RATING: 22,000
GROUND BUS: EQUIP. ONLY
NEUTRAL BUS RATING: 100%

NOTES	LOAD CLASS	LOAD NAME	TRIP	POLES	CKT NO	A (VA)	B (VA)	C (VA)	A (VA)	B (VA)	C (VA)	CKT NO	POLES	TRIP	LOAD NAME	LOAD CLASS	NOTES
	HVAC; REC;...	PANEL "TEF"	100 A	3	1	7070			0			2	3	30 A	SPD (SEE NOTE 1)	--	
	--	--	--	--	3		6000			0		4	--	--	--	--	
	--	--	--	--	5			6250			0	6	--	--	--	--	
	HVAC	VAV	20 A	1	7	300			1080			8	1	20 A	RCPTS-RM 1005 FLOOR BOX	WORKSTATION	
	--	SPARE	20 A	1	9		0			1080		10	1	20 A	RCPTS-OPEN OFFICE 1001	REC	
	HVAC	EF-1	15 A	2	11			50			300	12	1	20 A	CONTROLS-1	HVAC	
	--	--	--	--	13	50			300			14	1	20 A	CONTROLS-2	HVAC	
	WORKSTATION	RCPTS-SECURITY 1017	20 A	1	15		1260			0		16	1	20 A	SPARE	--	
	REC	RCPTS-CIRCU 1011, 1012	20 A	1	17			360			63	18	1	20 A	BLUE WARNING LIGHTS	LTS	
	REC	COFFEE MAKER	20 A	1	19	500			1720			20	1	20 A	RCPTS-BREAK 1002	REC	
	REC	RCPTS-RM 1003, 1004, 1005	20 A	1	21		1080			360		22	1	20 A	RCPTS-RESTROOMS	REC	
	REC	MONITOR - CONF 1014	20 A	1	23			500			500	24	1	20 A	MICROWAVE	REC	
	--	SPARE	20 A	1	25	0			756			26	1	15 A	GARBAGE DISPOSAL	HVAC	
	--	SPARE	20 A	1	27		0			500		28	1	20 A	FMSP (NOTE 2)	OTHER	
	REC	EWC-1 (WATER FOUNTAIN)	20 A	1	29			1000			500	30	1	20 A	MONITOR - CONF 1015	REC	
	REC	REFRIGERATOR BREAK 1002	20 A	1	31	1000			0			32	2	20 A	SPARE	--	
	WORKSTATION	RCPTS-RM 1003 FLOOR BOX	20 A	1	33		1080			0		34	--	--	--	--	
	OTHER	EQN SECURITY 1016	20 A	1	35			100			500	36	2	20 A	UH-3, UH-4	HVAC	
	HVAC	UH-1	30 A	2	37	2150			500			38	--	--	--	--	
	--	--	--	--	39		2150			0		40	1	20 A	SPARE	--	
	--	SPARE	20 A	1	41			0			60	42	1	20 A	LTG - RESTROOM VANITY	LTS	
	OTHER	FOLDING PARTITION - RM 1015	20 A	3	43	1201			1080			44	1	20 A	RCPTS- OFFICE 1004	WORKSTATION	
	--	--	--	--	45		1201			0		46	1	20 A	SPARE	--	
	--	--	--	--	47			1201			0	48	1	20 A	SPARE	--	
	--	SPARE	20 A	1	49	0			0			50	1	20 A	SPARE	--	
	--	SPARE	20 A	1	51		0			0		52	1	20 A	SPARE	--	
	--	SPARE	20 A	1	53			0			0	54	1	20 A	SPARE	--	

LOAD TYPES	CONNECTED LOADS	DEMAND FACTORS	DEMAND LOADS
HVAC	7556 VA	100.00%	7556 VA
LTS	123 VA	100.00%	123 VA
OTHER.	5903 VA	100.00%	5903 VA
REC	10720 VA	96.64%	10360 VA
WORKSTATION	4500 VA	100.00%	4500 VA
SERVER	15000 VA	100.00%	15000 VA

TOTAL LOAD SUMMARY

LOAD (VA)	LOAD (AMPS)
CONNECTED LOAD PHASE A: 17707 VA	CONNECTED LOAD PHASE A: 151.8 A
CONNECTED LOAD PHASE B: 14711 VA	CONNECTED LOAD PHASE B: 126.9 A
CONNECTED LOAD PHASE C: 11384 VA	CONNECTED LOAD PHASE C: 94.9 A
CONNECTED LOAD: 43802 VA	**CONNECTED LOAD: 121.6 A**
SPARE CAPACITY FACTOR: 15%	SPARE CAPACITY FACTOR: 15.0%
DEMAND LOAD: 43441.7 VA	DEMAND LOAD: 120.6 A
SPARE LOAD: 6516 VA	SPARE LOAD: 18 A
DEMAND LOAD WITH SPARE: 49958 VA	**DEMAND LOAD WITH SPARE: 139 A**

SCHEDULE NOTES: 1. FOLLOW MANUFACTURER'S INSTRUCTIONS FOR FINAL INSTALLATION REQUIREMENTS OF SPD.
2. CIRCUIT BREAKERS FOR FIRE PROTECTION PANEL FMSP MUST BE RED WITH THE FOLLOWING INSCRIPTION ON THE OUTSIDE OF THE PANEL: "FIRE PROTECTION/LIFE SAFETY EQUIPMENT."

LP1C

LOCATION: ELEC 1018
SUPPLY FROM: LP1
MOUNTING: SURFACE
ENCLOSURE: TYPE 1

VOLTAGE: 208/120V, 3-PHASE, 4-WIRE
MAINS TYPE: 100 A
TRIP SIZE: 100 A

INTERRUPTING RATING: 22,000
GROUND BUS: EQUIP. ONLY
NEUTRAL BUS RATING: 100%

NOTES	LOAD CLASS	LOAD NAME	TRIP	POLES	CKT NO	A (VA)	B (VA)	C (VA)	A (VA)	B (VA)	C (VA)	CKT NO	POLES	TRIP	LOAD NAME	LOAD CLASS	NOTES
	OTHER	FMCP (SEE NOTE 2)	20 A	1	1	500			0			2	3	30 A	SPD (SEE NOTE 1)	--	
	REC	RCPTS-ELEC 1018	20 A	1	3		360			0		4	--	--	--	--	
	REC	RCPTS-FIRE RISER 1017	20 A	1	5			360			0	6	--	--	--	--	
	REC	EXTERIOR RECEPTACLES	20 A	1	7	1080			100			8	1	20 A	FAT (SEE NOTE 2)	OTHER	
	REC	RCPTS-VESTIBULE 1000	20 A	1	9		540			998		10	2	20 A	HP-2	HVAC	
	HVAC	HP-1	40 A	2	11			582			998	12	--	--	--	--	
	--	--	--	--	13	582			500			14	1	20 A	FSCP (SEE NOTE 2)	OTHER	
	--	SPACE	--	1	15		--			1200		16	1	20 A	GENERATOR HEATER	OTHER	
	OTHER	GENERATOR-BAT CHARGER	20 A	1	17			240			0	18	2	20 A	SPARE	--	
	--	SPARE	20 A	2	19	0			0			20	--	--	--	--	
	--	--	--	--	21		0			60		22	1	20 A	SHUNT TRIP CIRCUIT	OTHER	
	OTHER	CAMERA-1, 2, 3	20 A	1	23			600			300	24	1	20 A	CONTROLS-3	HVAC	
	OTHER	ACS-2	20 A	1	25	500			600			26	1	20 A	DOCKING STATION	OTHER	
	OTHER	IDS-2	20 A	1	27		500			0		28	1	20 A	SPARE	--	
	HVAC	UH-2	15 A	2	29			250			0	30	1	20 A	SPARE	--	
	--	--	--	--	31	250			0			32	1	20 A	SPARE	--	
	--	SPARE	20 A	1	33		0			0		34	1	20 A	SPARE	--	
	--	SPARE	20 A	1	35			0			0	36	1	20 A	SPARE	--	
	--	SPARE	20 A	1	37	0			0			38	1	20 A	SPARE	--	
	--	SPARE	20 A	1	39		0			0		40	1	20 A	SPARE	--	
	--	SPARE	20 A	1	41			0			0	42	1	20 A	SPARE	--	

LOAD TYPES	CONNECTED LOADS	DEMAND FACTORS	DEMAND LOADS
HVAC	3961 VA	100.00%	3961 VA
OTHER.	4800 VA	100.00%	4800 VA
REC	2340 VA	100.00%	2340 VA

TOTAL LOAD SUMMARY

LOAD (VA)	LOAD (AMPS)
CONNECTED LOAD PHASE A: 4112 VA	CONNECTED LOAD PHASE A: 34.7 A
CONNECTED LOAD PHASE B: 3658 VA	CONNECTED LOAD PHASE B: 30.9 A
CONNECTED LOAD PHASE C: 3330 VA	CONNECTED LOAD PHASE C: 27.8 A
CONNECTED LOAD: 11101 VA	**CONNECTED LOAD: 30.8 A**
SPARE CAPACITY FACTOR: 15%	SPARE CAPACITY FACTOR: 15.0%
DEMAND LOAD: 11100.8 VA	DEMAND LOAD: 30.8 A
SPARE LOAD: 1665 VA	SPARE LOAD: 5 A
DEMAND LOAD WITH SPARE: 12766 VA	**DEMAND LOAD WITH SPARE: 35 A**

SCHEDULE NOTES: 1. FOLLOW MANUFACTURER'S INSTRUCTIONS FOR FINAL INSTALLATION REQUIREMENTS OF SPD.
2. CIRCUIT BREAKERS FOR FIRE PROTECTION PANELS FMCP, FSCP, AND FAT MUST BE RED WITH THE FOLLOWING INSCRIPTION ON THE OUTSIDE OF THE PANEL: "FIRE PROTECTION/LIFE SAFETY EQUIPMENT."

TEF

LOCATION: TEF 1006
SUPPLY FROM: LP1B
MOUNTING: SURFACE
ENCLOSURE: TYPE 1

VOLTAGE: 208/120V, 3-PHASE, 4-WIRE
MAINS TYPE: 100 A
TRIP SIZE: 100 A

INTERRUPTING RATING: 22,000
GROUND BUS: EQUIP. ONLY
NEUTRAL BUS RATING: 100%

NOTES	LOAD CLASS	LOAD NAME	TRIP	POLES	CKT NO	A (VA)	B (VA)	C (VA)	A (VA)	B (VA)	C (VA)	CKT NO	POLES	TRIP	LOAD NAME	LOAD CLASS	NOTES
	REC	RCPTS-TEF 1007	20 A	1	1	720			0			2	3	30 A	SPD (SEE NOTE 1)	--	
	REC	RCPTS-TEF 1006	20 A	1	3		900			0		4	--	--	--	--	
	--	SPARE	50 A	3	5			0			0	6	--	--	--	--	
	--	--	--	--	7	0			5000			8	3	50 A	BLK CABINET - TEF 1007	SERVER	
	--	--	--	--	9		0			5000		10	--	--	--	--	
	OTHER	ACS-1	20 A	1	11			500			5000	12	--	--	--	--	
	OTHER	IDS-1	20 A	1	13	500			600			14	1	20 A	DDC	OTHER	
	OTHER	AASD-4	20 A	1	15		100			0		16	1	20 A	SPARE	--	
	HVAC	EF-5	20 A	2	17			250			500	18	1	20 A	PA AND SOUND MASKING	REC	
	--	--	--	--	19	250			--			20	1	--	SPACE	--	
	--	SPACE	--	1	21		--			--		22	1	--	SPACE	--	
	--	SPACE	--	1	23			--			--	24	1	--	SPACE	--	
	--	SPACE	--	1	25	--			--			26	1	--	SPACE	--	
	--	SPACE	--	1	27		--			--		28	1	--	SPACE	--	
	--	SPACE	--	1	29			--			--	30	1	--	SPACE	--	
	--	SPACE	--	1	31	--			--			32	1	--	SPACE	--	
	--	SPACE	--	1	33		--			--		34	1	--	SPACE	--	
	--	SPARE	20 A	1	35			0			0	36	1	20 A	SPARE	--	
	--	SPARE	20 A	1	37	0			0			38	1	20 A	SPARE	--	
	--	SPARE	20 A	1	39		0			0		40	1	20 A	SPARE	--	
	--	SPARE	20 A	1	41			0			0	42	1	20 A	SPARE	--	

LOAD TYPES	CONNECTED LOADS	DEMAND FACTORS	DEMAND LOADS
HVAC	500 VA	100.00%	500 VA
OTHER.	1700 VA	100.00%	1700 VA
REC	2120 VA	100.00%	2120 VA
SERVER	15000 VA	100.00%	15000 VA

TOTAL LOAD SUMMARY

LOAD (VA)	LOAD (AMPS)
CONNECTED LOAD PHASE A: 7070 VA	CONNECTED LOAD PHASE A: 59.2 A
CONNECTED LOAD PHASE B: 6000 VA	CONNECTED LOAD PHASE B: 50.0 A
CONNECTED LOAD PHASE C: 6250 VA	CONNECTED LOAD PHASE C: 52.4 A
CONNECTED LOAD: 19320 VA	**CONNECTED LOAD: 53.6 A**
SPARE CAPACITY FACTOR: 15%	SPARE CAPACITY FACTOR: 15.0%
DEMAND LOAD: 19320.0 VA	DEMAND LOAD: 53.6 A
SPARE LOAD: 2898 VA	SPARE LOAD: 8 A
DEMAND LOAD WITH SPARE: 22218 VA	**DEMAND LOAD WITH SPARE: 62 A**

SCHEDULE NOTES: 1. FOLLOW MANUFACTURER'S INSTRUCTIONS FOR FINAL INSTALLATION REQUIREMENTS OF SPD.

STATE OF OHIO
MARK OSSANNA
PE.93786
REGISTERED
PROFESSIONAL ENGINEER

MARK	DESCRIPTION	DATE

DESIGNED BY: M. OSSANNA
DRAWN BY: K. LONBECK
CHECKED BY: B. MITAROTONDA
SUBMITTED BY: D. PEARSON
SIZE: ANSI D

ISSUE DATE: MAY 2026
ANG PROJECT NO.: PBXP222050
CONTRACT NO.: FA8903-21-D-0008
TASK ORDER NO.: W50S8R23F0009

OHIO AIR NATIONAL GUARD
MANSFIELD LAHM AIR NATIONAL GUARD BASE, OH

JACOBS GOVERNMENT SERVICES
2600 MICHELSON SR, STE 500
IRVINE, CA 92612

MANSFIELD LAHM AIR NATIONAL GUARD BASE, OH
REPAIR B403 FOR CYBER
FA877006
ELECTRICAL PANEL SCHEDULES

SHEET ID
E-612

TYPE B-3 FINAL

LAB A

LOCATION: LAB A 1007
SUPPLY FROM: LP1A
MOUNTING: SURFACE
ENCLOSURE: TYPE 1

VOLTAGE: 208/120V, 3-PHASE, 4-WIRE
MAINS TYPE: 100 A
TRIP SIZE: 100 A

INTERRUPTING RATING: 22,000
GROUND BUS: EQUIP. ONLY
NEUTRAL BUS RATING: 100%

NOTES	LOAD CLASS	LOAD NAME	TRIP	POLES	CKT NO	A (VA)	B (VA)	C (VA)	A (VA)	B (VA)	C (VA)	CKT NO	POLES	TRIP	LOAD NAME	LOAD CLASS	NOTES
	WORKSTATION	RCPTS-RM 1008 DESK SOUTH	20 A	1	1	720			0			2	3	30 A	SPD (SEE NOTE 1)	--	
	WORKSTATION	RCPTS-DESK SOUTH-EAST	20 A	1	3		720			0		4	--	--	--	--	
	WORKSTATION	RCPTS-RM 1008 DESK WEST	20 A	1	5			720			0	6	--	--	--	--	
	WORKSTATION	RCPTS-RM 1008 DESK SOUTH	20 A	1	7	720			100			8	1	20 A	AASD-A	OTHER	
	WORKSTATION	RCPTS-DESK SOUTH-WEST	20 A	1	9		720			60		10	1	20 A	EPO SHUNT TRIP 1008	OTHER	
	--	SPACE	--	1	11			--			720	12	1	20 A	RCPTS-LAB A 1008	REC	
	HVAC	EF-2	20 A	2	13	250			600			14	1	20 A	FMSP-A	OTHER	NOTE 2
	--	--	--	--	15		250			0		16	1	20 A	SPARE	--	
	--	SPACE	--	1	17			--			--	18	1	--	SPACE	--	
	WORKSTATION	FURN - LAB A 1007	20 A	3	19	400			--			20	1	--	SPACE	--	
	--	--	--	--	21		400			--		22	1	--	SPACE	--	
	--	--	--	--	23			400			--	24	1	--	SPACE	--	
	--	SPACE	--	1	25	--			--			26	1	--	SPACE	--	
	--	SPACE	--	1	27		--			--		28	1	--	SPACE	--	
	--	SPACE	--	1	29			--			--	30	1	--	SPACE	--	
	--	SPACE	--	1	31	--			--			32	1	--	SPACE	--	
	--	SPACE	--	1	33		--			--		34	1	--	SPACE	--	
	--	SPARE	20 A	1	35			0			0	36	1	20 A	SPARE	--	
	--	SPARE	20 A	1	37	0			0			38	1	20 A	SPARE	--	
	--	SPARE	20 A	1	39		0			0		40	1	20 A	SPARE	--	
	--	SPARE	20 A	1	41			0			0	42	1	20 A	SPARE	--	

LOAD TYPES	CONNECTED LOADS	DEMAND FACTORS	DEMAND LOADS
HVAC	500 VA	100.00%	500 VA
OTHER	760 VA	100.00%	760 VA
REC	720 VA	100.00%	720 VA
WORKSTATION	4800 VA	100.00%	4800 VA

TOTAL LOAD SUMMARY

LOAD (VA)	LOAD (AMPS)
CONNECTED LOAD PHASE A: 2790 VA	CONNECTED LOAD PHASE A: 23.6 A
CONNECTED LOAD PHASE B: 2150 VA	CONNECTED LOAD PHASE B: 18.3 A
CONNECTED LOAD PHASE C: 1840 VA	CONNECTED LOAD PHASE C: 15.3 A
CONNECTED LOAD: 6780 VA	**CONNECTED LOAD: 18.8 A**
SPARE CAPACITY FACTOR: 15%	SPARE CAPACITY FACTOR: 15.0%
DEMAND LOAD: 6780.0 VA	DEMAND LOAD: 18.8 A
SPARE LOAD: 1017 VA	SPARE LOAD: 3 A
DEMAND LOAD WITH SPARE: 7797 VA	**DEMAND LOAD WITH SPARE: 22 A**

SCHEDULE NOTES:
1. FOLLOW MANUFACTURER'S INSTRUCTIONS FOR FINAL INSTALLATION REQUIREMENTS OF SPD.
2. CIRCUIT BREAKERS FOR FIRE PROTECTION PANELS FMCP, FSCP, AND FAT MUST BE RED WITH THE FOLLOWING INSCRIPTION ON THE OUTSIDE OF THE PANEL: "FIRE PROTECTION/LIFE SAFETY EQUIPMENT."

LAB B

LOCATION: LAB B 1008
SUPPLY FROM: LP1A
MOUNTING: SURFACE
ENCLOSURE: TYPE 1

VOLTAGE: 208/120V, 3-PHASE, 4-WIRE
MAINS TYPE: 100 A
TRIP SIZE: 100 A

INTERRUPTING RATING: 22,000
GROUND BUS: EQUIP. ONLY
NEUTRAL BUS RATING: 100%

NOTES	LOAD CLASS	LOAD NAME	TRIP	POLES	CKT NO	A (VA)	B (VA)	C (VA)	A (VA)	B (VA)	C (VA)	CKT NO	POLES	TRIP	LOAD NAME	LOAD CLASS	NOTES
	WORKSTATION	RCPTS-RM 1009 CTR NORTH	20 A	1	1	1080			0			2	3	30 A	SPD (SEE NOTE 1)	--	
	WORKSTATION	RCPTS-LAB B 1009 WEST	20 A	1	3		1080			0		4	--	--	--	--	
	OTHER	AASD-B	20 A	1	5			100			0	6	--	--	--	--	
	HVAC	EF-3	20 A	2	7	250			900			8	1	20 A	RCPTS-LAB B 1009 EAST	REC	
	--	--	--	--	9		250			0		10	1	20 A	EPO SHUNT TRIP 1009	OTHER	
	--	SPARE	30 A	3	11			0			540	12	1	20 A	RCPTS-LAB B 1009 WEST	WORKSTATION	
	--	--	--	--	13	0			--			14	1	--	SPACE	--	
	--	--	--	--	15		0			--		16	1	--	SPACE	--	
NOTE 2	OTHER	FMSP-B	20 A	1	17			600			--	18	1	--	SPACE	--	
	WORKSTATION	FURNITURE - LAB B	20 A	3	19	400			--			20	1	--	SPACE	--	
	--	--	--	--	21		400			--		22	1	--	SPACE	--	
	--	--	--	--	23			400			--	24	1	--	SPACE	--	
	--	SPACE	--	1	25	--			--			26	1	--	SPACE	--	
	--	SPACE	--	1	27		--			--		28	1	--	SPACE	--	
	--	SPACE	--	1	29			--			--	30	1	--	SPACE	--	
	--	SPACE	--	1	31	--			--			32	1	--	SPACE	--	
	--	SPACE	--	1	33		--			--		34	1	--	SPACE	--	
	--	SPARE	20 A	1	35			0			0	36	1	20 A	SPARE	--	
	--	SPARE	20 A	1	37	0			0			38	1	20 A	SPARE	--	
	--	SPARE	20 A	1	39		0			0		40	1	20 A	SPARE	--	
	--	SPARE	20 A	1	41			0			0	42	1	20 A	SPARE	--	

LOAD TYPES	CONNECTED LOADS	DEMAND FACTORS	DEMAND LOADS
HVAC	500 VA	100.00%	500 VA
OTHER	700 VA	100.00%	700 VA
REC	900 VA	100.00%	900 VA
WORKSTATION	3900 VA	100.00%	3900 VA

TOTAL LOAD SUMMARY

LOAD (VA)	LOAD (AMPS)
CONNECTED LOAD PHASE A: 2630 VA	CONNECTED LOAD PHASE A: 22.0 A
CONNECTED LOAD PHASE B: 1730 VA	CONNECTED LOAD PHASE B: 14.5 A
CONNECTED LOAD PHASE C: 1640 VA	CONNECTED LOAD PHASE C: 13.7 A
CONNECTED LOAD: 6000 VA	**CONNECTED LOAD: 16.7 A**
SPARE CAPACITY FACTOR: 15%	SPARE CAPACITY FACTOR: 15.0%
DEMAND LOAD: 6000.0 VA	DEMAND LOAD: 16.7 A
SPARE LOAD: 900 VA	SPARE LOAD: 2 A
DEMAND LOAD WITH SPARE: 6900 VA	**DEMAND LOAD WITH SPARE: 19 A**

SCHEDULE NOTES:
1. FOLLOW MANUFACTURER'S INSTRUCTIONS FOR FINAL INSTALLATION REQUIREMENTS OF SPD.
2. CIRCUIT BREAKERS FOR FIRE PROTECTION PANELS FMCP, FSCP, AND FAT MUST BE RED WITH THE FOLLOWING INSCRIPTION ON THE OUTSIDE OF THE PANEL: "FIRE PROTECTION/LIFE SAFETY EQUIPMENT."

LAB C

LOCATION: LAB C 1009
SUPPLY FROM: LP1A
MOUNTING: SURFACE
ENCLOSURE: TYPE 1

VOLTAGE: 208/120V, 3-PHASE, 4-WIRE
MAINS TYPE: 100 A
TRIP SIZE: 100 A

INTERRUPTING RATING: 22,000
GROUND BUS: EQUIP. ONLY
NEUTRAL BUS RATING: 100%

NOTES	LOAD CLASS	LOAD NAME	TRIP	POLES	CKT NO	A (VA)	B (VA)	C (VA)	A (VA)	B (VA)	C (VA)	CKT NO	POLES	TRIP	LOAD NAME	LOAD CLASS	NOTES
	WORKSTATION	RCPTS-LAB C 1010 CTR...	20 A	1	1	1080			0			2	3	30 A	SPD (SEE NOTE 1)	--	
	REC	RCPTS-LAB C 1010...	20 A	1	3		1080			0		4	--	--	--	--	
	WORKSTATION	RCPTS-LAB C 1010 WEST	20 A	1	5			1080			0	6	--	--	--	--	
	OTHER	AASD-C	20 A	1	7	100			1080			8	1	20 A	RCPTS-CTR SOUTHEAST	WORKSTATION	
	HVAC	EF-4	15 A	2	9		250			1080		10	1	20 A	RCPTS-RM 1010 NORTHEAST	WORKSTATION	
	--	--	--	--	11			250			1080	12	1	20 A	RCPTS-RM 1010 NORTHWEST	WORKSTATION	
NOTE 2	OTHER	FMSP-C	20 A	1	13	600			60			14	1	20 A	EPO SHUNT TRIP 1010	OTHER	
	--	SPARE	20 A	1	15		0			--		16	1	--	SPACE	--	
	--	SPARE	20 A	1	17			0			--	18	1	--	SPACE	--	
	WORKSTATION	FURNITURE - LAB C	20 A	3	19	400			--			20	1	--	SPACE	--	
	--	--	--	--	21		400			--		22	1	--	SPACE	--	
	--	--	--	--	23			400			--	24	1	--	SPACE	--	
	--	SPACE	--	1	25	--			--			26	1	--	SPACE	--	
	--	SPACE	--	1	27		--			--		28	1	--	SPACE	--	
	--	SPACE	--	1	29			--			--	30	1	--	SPACE	--	
	--	SPACE	--	1	31	--			--			32	1	--	SPACE	--	
	--	SPACE	--	1	33		--			--		34	1	--	SPACE	--	
	--	SPARE	20 A	1	35			0			0	36	1	20 A	SPARE	--	
	--	SPARE	20 A	1	37	0			0			38	1	20 A	SPARE	--	
	--	SPARE	20 A	1	39		0			0		40	1	20 A	SPARE	--	
	--	SPARE	20 A	1	41			0			0	42	1	20 A	SPARE	--	

LOAD TYPES	CONNECTED LOADS	DEMAND FACTORS	DEMAND LOADS
HVAC	500 VA	100.00%	500 VA
OTHER	760 VA	100.00%	760 VA
REC	1080 VA	100.00%	1080 VA
WORKSTATION	6600 VA	100.00%	6600 VA

TOTAL LOAD SUMMARY

LOAD (VA)	LOAD (AMPS)
CONNECTED LOAD PHASE A: 3320 VA	CONNECTED LOAD PHASE A: 27.7 A
CONNECTED LOAD PHASE B: 2810 VA	CONNECTED LOAD PHASE B: 23.4 A
CONNECTED LOAD PHASE C: 2810 VA	CONNECTED LOAD PHASE C: 23.4 A
CONNECTED LOAD: 8940 VA	**CONNECTED LOAD: 24.8 A**
SPARE CAPACITY FACTOR: 15%	SPARE CAPACITY FACTOR: 15.0%
DEMAND LOAD: 8940.0 VA	DEMAND LOAD: 24.8 A
SPARE LOAD: 1341 VA	SPARE LOAD: 4 A
DEMAND LOAD WITH SPARE: 10281 VA	**DEMAND LOAD WITH SPARE: 29 A**

SCHEDULE NOTES:
1. FOLLOW MANUFACTURER'S INSTRUCTIONS FOR FINAL INSTALLATION REQUIREMENTS OF SPD.
2. CIRCUIT BREAKERS FOR FIRE PROTECTION PANELS FMCP, FSCP, AND FAT MUST BE RED WITH THE FOLLOWING INSCRIPTION ON THE OUTSIDE OF THE PANEL: "FIRE PROTECTION/LIFE SAFETY EQUIPMENT."

PDU

LOCATION: TEF 1006
SUPPLY FROM: UPS-1
MOUNTING: FLOOR MOUNTED
ENCLOSURE: TYPE 1

VOLTAGE: 208/120V, 3-PHASE, 4-WIRE
MAINS TYPE: 1000 A
TRIP SIZE: 1000 A

INTERRUPTING RATING: 65,000
GROUND BUS: EQUIP. ONLY
NEUTRAL BUS RATING: 100%

NOTES	LOAD CLASS	LOAD NAME	TRIP	POLES	CKT NO	A (VA)	B (VA)	C (VA)	A (VA)	B (VA)	C (VA)	CKT NO	POLES	TRIP	LOAD NAME	LOAD CLASS	NOTES
	SERVER	BUSWAY (SEE NOTE 1)	600 A	3	1	55000			4000			2	3	60 A	LAB A CABINET (SEE NOTE 1)	SERVER	
	--	--	--	--	3		55000			4000		4	--	--	--	--	
	--	--	--	--	5			55000			4000	6	--	--	--	--	
	SERVER	LAB A CABINET (SEE NOTE 1)	60 A	3	7	4000			4000			8	3	60 A	LAB A CABINET (SEE NOTE 1)	SERVER	
	--	--	--	--	9		4000			4000		10	--	--	--	--	
	--	--	--	--	11			4000			4000	12	--	--	--	--	
	SERVER	LAB B CABINET (SEE NOTE 1)	60 A	3	13	2667			2667			14	3	60 A	LAB B CABINET (SEE NOTE 1)	SERVER	
	--	--	--	--	15		2667			2667		16	--	--	--	--	
	--	--	--	--	17			2667			2667	18	--	--	--	--	
	SERVER	LAB B CABINET (SEE NOTE 1)	60 A	3	19	2667			1667			20	3	60 A	LAB C CABINET (SEE NOTE 1)	SERVER	
	--	--	--	--	21		2667			1667		22	--	--	--	--	
	--	--	--	--	23			2667			1667	24	--	--	--	--	
	SERVER	LAB C CABINET (SEE NOTE 1)	60 A	3	25	1667			1667			26	3	60 A	LAB C CABINET (SEE NOTE 1)	SERVER	
	--	--	--	--	27		1667			1667		28	--	--	--	--	
	--	--	--	--	29			1667			1667	30	--	--	--	--	
	--	SPARE	60 A	3	31	0			0			32	3	60 A	SPARE	--	
	--	--	--	--	33		0			0		34	--	--	--	--	
	--	--	--	--	35			0			0	36	--	--	--	--	
	--	SPARE	60 A	3	37	0			0			38	3	60 A	SPARE	--	
	--	--	--	--	39		0			0		40	--	--	--	--	
	--	--	--	--	41			0			0	42	--	--	--	--	

LOAD TYPES	CONNECTED LOADS	DEMAND FACTORS	DEMAND LOADS
SERVER	240000 VA	100.00%	240000 VA

TOTAL LOAD SUMMARY

LOAD (VA)	LOAD (AMPS)
CONNECTED LOAD PHASE A: 80000 VA	CONNECTED LOAD PHASE A: 666.7 A
CONNECTED LOAD PHASE B: 80000 VA	CONNECTED LOAD PHASE B: 666.7 A
CONNECTED LOAD PHASE C: 80000 VA	CONNECTED LOAD PHASE C: 666.7 A
CONNECTED LOAD: 240000 VA	**CONNECTED LOAD: 666.2 A**
SPARE CAPACITY FACTOR: 15%	SPARE CAPACITY FACTOR: 15.0%
DEMAND LOAD: 240000.0 VA	DEMAND LOAD: 666.2 A
SPARE LOAD: 36000 VA	SPARE LOAD: 100 A
DEMAND LOAD WITH SPARE: 276000 VA	**DEMAND LOAD WITH SPARE: 766 A**

SCHEDULE NOTES:
1. PROVIDE SHUNT TRIP FOR CIRCUIT BREAKER TO BE CONTROLLED BY EPO SWITCH IN ASSOCIATED ROOM.

STATE OF OHIO
MARK OSSANNA
PE.93786
REGISTERED
PROFESSIONAL ENGINEER

MARK	DESCRIPTION	DATE

DESIGNED BY: M. OSSANNA
DRAWN BY: K. LONBECK
CHECKED BY: B. MITAROTONDA
SUBMITTED BY: D. PEARSON
DATE: ISSUE DATE: MAY 2026
ANSI D

ANG PROJECT NO.: PBXP22050
CONTRACT NO.: FA8903-21-D-0008
TASK ORDER NO.: W50S8R23F0009

OHIO AIR NATIONAL GUARD
MANSFIELD LAHM AIR NATIONAL GUARD BASE, OH

JACOBS GOVERNMENT SERVICES
2600 MICHELSON SR, STE 500
IRVINE, CA 92612

MANSFIELD LAHM AIR NATIONAL GUARD BASE, OH
REPAIR B403 FOR CYBER
FA877006
ELECTRICAL PANEL SCHEDULES

SHEET ID
E-613

HM1A

LOCATION: TEF 1006
SUPPLY FROM: MDP-1
MOUNTING: SURFACE
ENCLOSURE: TYPE 1

VOLTAGE: 480/277V, 3-PHASE, 4-WIRE
MAINS TYPE: 400 A
TRIP SIZE: 400 A

INTERRUPTING RATING: 42,000
GROUND BUS: EQUIP. ONLY
NEUTRAL BUS RATING:

NOTES	LOAD CLASS	LOAD NAME	TRIP	POLES	CKT NO	A (VA)	B (VA)	C (VA)	A (VA)	B (VA)	C (VA)	CKT NO	POLES	TRIP	LOAD NAME	LOAD CLASS	NOTES
	HVAC	CRAC-1 (SEE NOTE 2)	50 A	3	1	7870			0			2	3	30 A	SPD (SEE NOTE 1)	--	
	--	--	--	--	3		7870			0		4	--	--	--	--	
	--	--	--	--	5			7870			0	6	--	--	--	--	
	HVAC	CRAC-3 (SEE NOTE 2)	50 A	3	7	7870			7870			8	3	50 A	CRAC-2 (SEE NOTE 2)	HVAC	
	--	--	--	--	9		7870			7870		10	--	--	--	--	
	--	--	--	--	11			7870			7870	12	--	--	--	--	
	HVAC	CRAC-5 (SEE NOTE 2)	50 A	3	13	7870			7870			14	3	50 A	CRAC-4 (SEE NOTE 2)	HVAC	
	--	--	--	--	15		7870			7870		16	--	--	--	--	
	--	--	--	--	17			7870			7870	18	--	--	--	--	
	HVAC	CRAC-7 (SEE NOTE 2)	50 A	3	19	7870			7870			20	3	50 A	CRAC-6 (SEE NOTE 2)	HVAC	
	--	--	--	--	21		7870			7870		22	--	--	--	--	
	--	--	--	--	23			7870			7870	24	--	--	--	--	
	HVAC	EWH-1	30 A	3	25	5333			7870			26	3	50 A	CRAC-8 (SEE NOTE 2)	HVAC	
	--	--	--	--	27		5333			7870		28	--	--	--	--	
	--	--	--	--	29			5333			7870	30	--	--	--	--	
	--	SPARE	60 A	3	31	0			5333			32	3	30 A	EWH-2	HVAC	
	--	--	--	--	33		0			5333		34	--	--	--	--	
	--	--	--	--	35			0			5333	36	--	--	--	--	
	--	SPARE	60 A	3	37	0			0			38	3	50 A	SPARE	--	
	--	--	--	--	39		0			0		40	--	--	--	--	
	--	--	--	--	41			0			0	42	--	--	--	--	

LOAD TYPES	CONNECTED LOADS	DEMAND FACTORS	DEMAND LOADS	TOTAL LOAD SUMMARY	
				LOAD (VA)	LOAD (AMPS)
HVAC	220890 VA	100.00%	220890 VA	CONNECTED LOAD PHASE A: 73630 VA	CONNECTED LOAD PHASE A: 265.8 A
				CONNECTED LOAD PHASE B: 73630 VA	CONNECTED LOAD PHASE B: 265.8 A
				CONNECTED LOAD PHASE C: 73630 VA	CONNECTED LOAD PHASE C: 265.8 A
				CONNECTED LOAD: 220890 VA	**CONNECTED LOAD: 265.7 A**
				SPARE CAPACITY FACTOR: 15%	SPARE CAPACITY FACTOR: 15.0%
				DEMAND LOAD: 220890.4 VA	DEMAND LOAD: 265.7 A
				SPARE LOAD: 33134 VA	SPARE LOAD: 40 A
				DEMAND LOAD WITH SPARE: 254024 VA	**DEMAND LOAD WITH SPARE: 306 A**

SCHEDULE NOTES:
1. FOLLOW MANUFACTURER'S INSTRUCTIONS FOR FINAL INSTALLATION REQUIREMENTS OF SPD.
2. PROVIDE SHUNT TRIP FOR CIRCUIT BREAKER TO BE CONTROLLED BY EPO SWITCH IN ASSOCIATED ROOM.

HM1B

LOCATION: ELEC 1018
SUPPLY FROM: MDP-1
MOUNTING: SURFACE
ENCLOSURE: TYPE 1

VOLTAGE: 480/277V, 3-PHASE, 4-WIRE
MAINS TYPE: 225 A
TRIP SIZE: 225 A

INTERRUPTING RATING: 42,000
GROUND BUS: EQUIP. ONLY
NEUTRAL BUS RATING: 100%

NOTES	LOAD CLASS	LOAD NAME	TRIP	POLES	CKT NO	A (VA)	B (VA)	C (VA)	A (VA)	B (VA)	C (VA)	CKT NO	POLES	TRIP	LOAD NAME	LOAD CLASS	NOTES
	HVAC	ACCU-1	15 A	3	1	388			0			2	3	30 A	SPD (SEE NOTE 1)	--	
	--	--	--	--	3		388			0		4	--	--	--	--	
	--	--	--	--	5			388			0	6	--	--	--	--	
	HVAC	ACCU-3	15 A	3	7	388			388			8	3	15 A	ACCU-2	HVAC	
	--	--	--	--	9		388			388		10	--	--	--	--	
	--	--	--	--	11			388			388	12	--	--	--	--	
	HVAC	ACCU-5	15 A	3	13	388			388			14	3	15 A	ACCU-4	HVAC	
	--	--	--	--	15		388			388		16	--	--	--	--	
	--	--	--	--	17			388			388	18	--	--	--	--	
	HVAC	ACCU-7	15 A	3	19	388			388			20	3	15 A	ACCU-6	HVAC	
	--	--	--	--	21		388			388		22	--	--	--	--	
	--	--	--	--	23			388			388	24	--	--	--	--	
	HVAC	AC-1	70 A	3	25	12859			388			26	3	15 A	ACCU-8	HVAC	
	--	--	--	--	27		12859			388		28	--	--	--	--	
	--	--	--	--	29			12859			388	30	--	--	--	--	
	--	SPARE	15 A	3	31	0			6667			32	3	40 A	EWH-3	HVAC	
	--	--	--	--	33		0			6667		34	--	--	--	--	
	--	--	--	--	35			0			6667	36	--	--	--	--	
	--	SPARE	20 A	3	37	0			--			38	1	--	SPACE	--	
	--	--	--	--	39		0			303		40	1	20 A	LTG - ELECT, FIRE, VESTIBULE	LTS	
	--	--	--	--	41			0			288	42	1	20 A	LTG - EXTERIOR	LTS	

LOAD TYPES	CONNECTED LOADS	DEMAND FACTORS	DEMAND LOADS	TOTAL LOAD SUMMARY	
				LOAD (VA)	LOAD (AMPS)
HVAC	67887 VA	100.00%	67887 VA	CONNECTED LOAD PHASE A: 22629 VA	CONNECTED LOAD PHASE A: 81.7 A
LTS	591 VA	100.00%	591 VA	CONNECTED LOAD PHASE B: 22932 VA	CONNECTED LOAD PHASE B: 82.9 A
				CONNECTED LOAD PHASE C: 22917 VA	CONNECTED LOAD PHASE C: 82.9 A
				CONNECTED LOAD: 68478 VA	**CONNECTED LOAD: 82.4 A**
				SPARE CAPACITY FACTOR: 15%	SPARE CAPACITY FACTOR: 15.0%
				DEMAND LOAD: 68478.4 VA	DEMAND LOAD: 82.4 A
				SPARE LOAD: 10272 VA	SPARE LOAD: 12 A
				DEMAND LOAD WITH SPARE: 78750 VA	**DEMAND LOAD WITH SPARE: 95 A**

SCHEDULE NOTES: 1. FOLLOW MANUFACTURER'S INSTRUCTIONS FOR FINAL INSTALLATION REQUIREMENTS OF SPD.

STATE OF OHIO
MARK OSSANNA
PE.93786
REGISTERED
PROFESSIONAL ENGINEER

MARK	DESCRIPTION	DATE

DESIGNED BY: M. OSSANNA
DRAWN BY: K. LONBECK
CHECKED BY: B. MITAROTONDA
SUBMITTED BY: S. PEARSON
QTY: ANSI D

ISSUE DATE: MAY 2026
ANG PROJECT NO.: PBXP22050
CONTRACT NO.: FA8903-21-D-0008
TASK ORDER NO.: W50SBR23F0009

OHIO AIR NATIONAL GUARD
MANSFIELD LAHM AIR NATIONAL GUARD BASE, OH

JACOBS GOVERNMENT SERVICES
2600 MICHELSON SR, STE 500
IRVINE, CA 92812

MANSFIELD LAHM AIR NATIONAL GUARD BASE, OH
REPAIR B403 FOR CYBER
FA877006
ELECTRICAL PANEL SCHEDULES

SHEET ID
E-614

TYPE B-3 FINAL

LIGHTING FIXTURE SCHEDULE

TAG	DESCRIPTION	LAMP			DRIVER				MINIMUM LUMEN OUTPUT		LUMINAIRE MOUNTING	
		TYPE	COLOR	CRI	TYPE	INPUT VOLTAGE	SYSTEM WATTS	EMERGENCY BATTERY	NORMAL	EMERGENCY	METHOD	HEIGHT
A	48" LENGTH X 9" WIDE, ROUNDED, ARCHITECTURAL LINEAR PENDANT, DIRECT ONLY (SOLID TOP), MEDIUM DISTRIBUTION, HIGHLY DIFFUSED LIGHT SOURCE. SATIN ACRYLIC LENS, TEXTURED WHITE FINISH, 20 GAUGE STEEL,	LED	4000 K	80	0-10V, 1% DIMMING	277	22	YES	2956	1100	PENDANT	9'-0"
B	LOW PROFILE, VAPOR-TIGHT, ENCLOSED AND GASKETED INDUSTRIAL UL LISTED FOR WET LOCATIONS. ACRYLIC, LOW PROFILE CLEAR LENS. MEDIUM DISTRIBUTION. LED FIXTURE, 48" LENGTH, 11.9 LBS. ONE-PIECE SEAMLESS FIBERGRLASS HOUSING.	LED	4000 K	80		277	24	YES	4065	1900	PENDANT	8'-0"
D	6" CYLINDER RECESSED LED DOWNLIGHT, WHITE TRIM, UL LISTED FOR DAMP LOCATION IN CEILING APPLICATIONS. 50 DEGREE BEAM DISTRIBUTION. LED LIGHT SOURCE CONCEALED WITH DIFFUSING OPTICAL LENS.	LED	4000 K	80	0-10V, 10% DIMMING	277	6	YES - ONLY IN ROOMS 1014 & 1015	557	557	RECESSED	
E1	3" WIDE BY 24", RECESSED LINEAR, HIGH PERFORMANCE, DIRECT LIGHT. FLUSH MOUNTED WITH CEILING AND WALLS. EXTRUDED ALUMINUM HOUSING FINISHED WITH HIGH RELECTANCE WHITE POWER COAT PAINT (96LG). INTERNAL SECONDARY DIFFUSER AT CORNERS TO CREATE SEAMLESS AND CONTINUOUS ILLUMINATION.	LED	4000 K	80	0-10V, 10% DIMMING	277	15		1498		RECESSED	
E2	SIMILAR TO E1 EXCEPT 48" LENGTH.	LED	4000 K	80	0-10V, 10% DIMMING	277	30	YES	2996	1243	RECESSED	
E3	SIMILAR TO E1 EXCEPT 72" LENGTH.	LED	4000 K	80	0-10V, 10% DIMMING	277	45		4494		RECESSED	
F1	DECORATIVE PENDANT, ALUMINUM PROFILE, 52" TRIANGULAR OPAL DIFFUSER, ONE ROW LED. FABRIC COVERING AS A LIGHT AND ACCOUSTIC DIFFUSER, THREE SUSPENSION POINTS WITH STEEL CABLES THAT COMBINE INTO A SINGLE CABLE.	LED	4000 K	80	0-10V, 10% DIMMING	277	83		5619		PENDANT	7'-8"
F2	SIMILAR TO F1 EXCEPT TWO ROWS LED.	LED	4000 K	80	0-10V, 10% DIMMING	277	166		11169		PENDANT	7'-8"
G	2" WIDE BY 8' ACOUSTIC BAFFLE LED, DIRECT, TO MATCH ARCHITECTURAL ACCOUSTIC SYSTEM. PROVIDE LUMINAIRE AS PART OF AND INTEGRATE INTO THE CEILING SYSTEM BEING PROVIDED. FROST WHITE DIFFUER AND STEEL REFLECTORS FINISHED WITH HIGH RELECTANCE WHITE POWER COAT PAINT (96LG).	LED	4000 K	80	0-10V, 10% DIMMING	277	38		3418		PENDANT	8'-6"
H	ROTATING LED WARNING BLUE LIGHT, PARABOLIC REFLECTOR.	LED	NA	NA		120	9				WALL	8'-0" TO CENTER UON
J	6" DIAMETER BY 12" HIGH, HEAVY-GAUGE EXTRUDED ALUMINUM CONSTRUCTION. CYLINDER WALL MOUNT SCONCE LED DOWNLIGHT, 60 DEGREE BEAM DISTRIBUTION. OPEN DOWNLIGHT REFLECTOR. PROVIDE THE CONDUIT COVER WALL MOUNT DESIGNED TO COVER THE SURFACE MOUNTED JUNCTION BOX.	LED	4000 K	80	0-10V, 10% DIMMING	277	10	YES	824	824	WALL	7'-0" IN OPEN OFFICE, 8'-0" IN CIRC 1010 & 1011
K	SIMILAR TO TYPE J, EXCEPT PENDANT MOUNT.	LED	4000 K	80	0-10V, 10% DIMMING	277	10	YES	824	824	PENDANT	7'-8"
W	EXTERIOR ARCHITECTURAL WALL SCONCE. TYPE IV DISTRIBUTION. BLACK FINISH. PROVIDE WITH MINIMUM 90 MINUTES COLD WEATHER BATTERY BACKUP. MATCH THE LOOK OF WALL SCONCES AT OTHER NEARBY BUILDINGS.	LED	4000 K	80		277	28	YES	3464	1100	WALL	12" FROM TOP OF DOOR TO BOTTOM OF FIXTURE UON
X	THERMOPLASTIC EXIT LIGHT WITH LED LAMPS AND RED LETTERS. MAINTENANCE FREE NICKEL CADMIUM BATTERY. UL DAMP LOCATION LISTED. SELF DIAGNOSTICS.	LED	NA	NA		277	15				WALL	3" ABOVE TOP OF DOOR

LUMINAIRE SCHEDULE GENERAL NOTES:

A. MOUNTING HEIGHTS ARE TO BOTTOM OF THE FIXTURE UON.

B. ARCHITECTURAL TO SELECT FINISH.

LIGHTING CONTROL MATRIX

ROOM NUMBER	ROOM NAME	TIMER SWITCH	MANUAL ON	MANUAL OFF	MANUAL ADJUST	MANUAL OVERRIDE	TIME CLOCK OFF	TIME CLOCK ON	OCCUPANCY ON TO 100%	OCCUPANCY ON TO 50%	VACANCY OFF	VACANCY TO 50%	PHOTOCELL ON	PHOTOCELL OFF	SEQUENCE OF OPERATION	NOTES
1000	VESTIBULE		X	X	X						X				SOO F	
1001	OPEN OFFICE		X	X	X					X	X				SOO E	
1002	BREAK		X	X	X						X				SOO A	
1003	OFFICE		X	X	X						X				SOO F	
1004	OFFICE		X	X	X						X				SOO F	
1005	OFFICE		X	X	X						X				SOO F	
1006	TEF		X	X											SOO C	
1007	LAB A		X	X	X					X	X				SOO E	
1008	LAB B		X	X	X					X	X				SOO E	
1009	LAB C		X	X	X					X	X				SOO E	
1010	CIRCULATION			X					X			X			SOO B	
1011	CIRC			X					X			X			SOO B	
1012	WOMENS		X	X					X		X				SOO H	
1013	MENS		X	X					X		X				SOO H	
1014	CONFERENCE		X	X	X					X	X				SOO E	
1015	CONFERENCE		X	X	X					X	X				SOO E	
1016	SECURITY		X	X	X						X				SOO F	
1017	FIRE RISER		X	X							X				SOO C	
1018	ELEC		X	X											SOO C	
2000	FRONT ENTRANCE AND BLDG MNT LIGHTS		X	X									X		SOO G	

SEQUENCE OF OPERATIONS

SOO A	LIGHTS CONTROLLED BY VACANCY SENSOR AND DIMMING SWITCH WITH MANUAL ON/OFF BUTTONS. MANUAL ON. VACANCY SENSOR MUST TURN LIGHTS OFF WHEN SPACE IS VACANT MORE THAN 20 MINUTES.
SOO B	LIGHTS CONTROLLED BY OCCUPANCY SENSOR. OCCUPANCY SENSORS SHALL TURN LIGHTS ON AND OFF FROM 0% TO 100% LIGHTING LEVEL. MANUAL OFF FOR END OF BUSINESS DAY.
SOO C	LINE VOLTAGE MANUAL ON/OFF CONTROLS ONLY.
SOO D	NOT USED.
SOO E	LIGHTS CONTROLLED BY OCCUPANCY SENSOR AND MUST TURN AUTOMATICALLY ON TO 50% LIGHT OUTPUT WHEN OCCUPANCY IS SENSED.. IN ADDITION LIGHTS CONTROLLED BY DIMMING SWITCH PER LUMINAIRE TYPE. OCCUPANCY SENSOR SHALL TURN LIGHTS OFF WHEN SPACE IS VACANT MORE THAN 20 MINUTES.
SOO F	LIGHTS CONTROLLED BY VACANCY SENSOR AND BY DIMMING SWITCH PER LUMINAIRE TYPE. MANUAL ON. VACANCY SENSOR MUST TURN LIGHTS OFF WHEN SPACE IS VACANT MORE THAN 20 MINUTES.
SOO G	LIGHTS SHALL TURN ON AND OFF VIA PHOTOCELL. PHOTOCELL INSTALLED ON THE OUTSIDE OF THE BUILDING. MOUNT LIGHTING CONTACTOR INSIDE A NEMA 1 ENCLOSURE INSIDE THE ELECTRICAL ROOM. PROVIDE A HAND-OFF-AUTO SWITCH ON THE EXTERIOR OF THE ENCLOSURE.
SOO H	LIGHTS WILL TURN ON TO 100% LIGHT OUTPUT BY OCCUPANCY SENSOR AND TURN OFF WHEN SPACE IS VACANT MORE THAN 20 MINUTES. LIGHTS MAY ALSO BE CONTROLLED BY MANUAL ON/OFF SWITCH.

GENERAL SHEET NOTES

A. FOR EXACT LOCATION OF RECESSED INTERIOR LUMINAIRES, SEE ARCHITECTURAL REFLECTED CEILING PLAN.

B. FOR LOCATION OF EXTERIOR MOUNTED LUMINAIRES, SEE ARCHITECTURAL ELEVATIONS.

C. FOR CEILING TYPES, SEE ARCHITECTURAL DWG'S AND/OR SPECIFICATIONS.

D. ALL DIMENSIONS INDICATED ARE "NOMINAL DIMENSIONS."

E. CONNECT EXIT SIGNS TO CIRCUIT CONNECTED TO LIGHT FIXTURES IN AREA SERVED. CONNECT TO UNSWITCHED PHASE CONDUCTOR.

F. CONTRACTOR MUST PROVIDE A LIGHTING SYSTEM THAT MEETS THE CONTROLS REQUIREMENTS SHOWN ON THIS DRAWING. CONTRACTOR IS RESPONSIBLE FOR PROVIDING EQUIPMENT NEEDED TO MEET THIS REQUIREMENTS INCLUDING, BUT NOT LIMITED TO, CONTROL STATIONS, WIRING, CONTACTORS, RELAYS, SENSORS, PROGRAMMING AND CONTROL PANELS.

G. THE LIGHTING CONTROL PANEL LOCATED IN EACH ELECTRICAL ROOM SHALL BE USED TO HOUSE THE LIGHTING CONTROLS NECESSARY.

H. PROVIDE A HAND-OFF-AUTO SWITCH AT THE LIGHTING CONTROL PANEL FOR EXTERIOR LIGHTING CONTROLS.

STATE OF OHIO
MARK OSSANNA
PE.93786
REGISTERED
PROFESSIONAL ENGINEER

MARK	DESCRIPTION	DATE

DESIGNED BY: M. OSSANNA
DRAWN BY: E. HAJAS
CHECKED BY: B. MITAROTONDA
SUBMITTED BY: S. PEARSON
QTY:
ANSI D

ISSUE DATE: MAY 2026
ANG PROJECT NO.: PBXP222050
CONTRACT NO.: FA8903-21-D-0008
TASK ORDER NO.: W50S8R23F0009

OHIO AIR NATIONAL GUARD
MANSFIELD LAHM AIR NATIONAL GUARD BASE, OH

JACOBS GOVERNMENT SERVICES
2600 MICHELSON SR, STE 500
IRVINE, CA 92612

MANSFIELD LAHM AIR NATIONAL GUARD BASE, OH
REPAIR B403 FOR CYBER
FA877006
ELECTRICAL LIGHTING SCHEDULES

SHEET ID
E-630

GENERAL NOTES

A. THIS IS A STANDARD LEGEND SHEET. SOME SYMBOLS OR ABBREVIATIONS MAY APPEAR ON THIS SHEET AND NOT ON THE PROJECT DRAWINGS.

B. THE TELECOMMUNICATIONS WORK MUST BE MANAGED BY A BICSI REGISTERED TELECOMMUNICATIONS DISTRIBUTION DESIGNER (RCDD) AND PERFORMED UNDER THE DIRECT SUPERVISION OF A BICSI CERTIFIED TECHNICIAN.

C. EXAMINE AND REVIEW THE CONTRACT DOCUMENTS OF EACH DISCIPLINE IN ORDER TO COORDINATE THE INSTALLATION WORK. USE DIMENSIONED ARCHITECTURAL AND STRUCTURAL CONTRACT DRAWINGS TO VERIFY THE SPACE NECESSARY FOR LOCATING OUTLETS, RACEWAYS, AND EXACT PLACEMENT OF EQUIPMENT. USE FIELD MEASUREMENTS TO VERIFY DIMENSIONS WHERE AREAS ARE CONGESTED, AND EXACT LOCATION IS CRITICAL FOR INSTALLATION. COORDINATION MUST INCLUDE, BUT NOT BE LIMITED TO, VERIFYING THE LOCATION AND SIZE OF OPENINGS FOR PENETRATIONS IN FLOORS, WALLS, PARTITIONS, CEILINGS, AND ROOFS WITH THE INSTALLING TRADES, ALLOCATION OF SPACE WITH OTHER TRADES INSTALLING WORK IN CHASES, SHAFTS, CEILING INTERSTITIAL SPACES, AND EQUIPMENT SPACES, AND THE PHASING OF INSTALLATION WORK WITH THAT OF OTHER TRADES.

D. INSTALL EQUIPMENT IN ACCORDANCE WITH THE MANUFACTURER'S PRINTED INSTALLATION INSTRUCTIONS, THE SPECIFICATIONS, AND APPROVED SHOP DRAWINGS. PROVIDE SERVICE AND OPERATING CLEARANCES AROUND THE SIDES OF EACH PIECE OF EQUIPMENT IN ACCORDANCE WITH REGULATORY REQUIREMENTS, MANUFACTURER'S REQUIREMENTS AND RECOMMENDATIONS.

E. ALL WALL AND PARTITION PENETRATIONS MUST BE SEALED WITH AN APPROVED SEALANT OR UL LISTED PENETRATION DEVICE THAT WILL MAINTAIN THE FIRE, SMOKE, SOUND, AND/OR WATERPROOF RATINGS OF THE TYPE OF CONSTRUCTION BEING PENETRATED. COORDINATE PENETRATION LOCATION REQUIREMENTS WITH ARCHITECTURAL PLANS AND WALL DETAILS.

F. PROVIDE CABLE LADDER RUNWAY SUPPORT ACCESSORIES AND HARDWARE ACCEPTABLE AS COMPLETE KITS FROM RUNWAY MANUFACTURER.

G. NO RF TRANSMITTERS ARE TO BE PLACED WITHIN 3 METERS OF THE SECURE PERIMETER.

H. COMMUNICATION PATHWAYS AND OUTLETS ARE SHOWN DIAGRAMMATICALLY. LOCATIONS ARE APPROXIMATE UNLESS DIMENSIONED. FIELD COORDINATE WORK WITH ARCHITECTURAL, POWER/LIGHTING, MECHANICAL, FURNITURE CONTRACTOR, AND OTHERS PRIOR TO INSTALLATION.

I. PROVIDE CONDUIT FOR EACH TELECOMMUNICATION OUTLET TO NEAREST COMMUNICATION HORIZONTAL CABLE TRAY OR WIREWAY IN THE DIRECTION OF THE COMMUNICATION ROOM THAT THE OUTLET IS FED FROM.

J. LOCATE AND PROVIDE CONDUIT SLEEVES FOR COMMUNICATION CABLING THROUGH WALLS INTO ENCLOSED SPACES AND THROUGH FLOOR PENETRATIONS. SLEEVES PROVIDED SIZED ACCORDING TO THE NUMBER OF CABLES PASSING THROUGH.

K. PROVIDE PULL STRINGS IN CONDUITS OVER 3-METERS IN LENGTH AT THE TIME OF CONDUIT INSTALLATION.

L. COORDINATE FINAL MOUNTING OF THE DATA OUTLETS IN THE OPEN OFFICE CUBICLES WITH THE FURNITURE INSTALLER.

M. PROVIDE NECESSARY CABLE, SUPPORTS, AND HARDWARE FOR A COMPLETE AND OPERABLE NETWORK CABLING SYSTEM.

N. MAINTAIN RED TO BLACK CABLE SEPARATION IN ACCORDANCE WITH TEMPEST 1-13 AND AS INDICATED ON PLANS

O. PROVIDE CABLE TERMINATIONS INCLUDING CONNECTORS, COUPLERS, FDU'S, PATCH PANELS, STRESS RELIEF, AND WIRE MANAGEMENT FOR A COMPLETE ICT SYSTEM.

P. PROVIDE CABLE MANUFACTURER APPROVED FANOUT KIT FOR THE DIRECT TERMINATION OF GEL FILLED, LOOSE TUBE, FIBER OPTIC CABLES (OUTDOOR FIBER ONLY). USE FUSION SPLICE METHOD WHENEVER POSSIBLE.

Q. PROVIDE A 10-FOOT COIL OF HORIZONTAL CABLE AT CABLE TRAY FOR EACH HORIZONTAL OUTLET LOCATIONS.

R. ROUTE AND TERMINATE HORIZONTAL DATA AND VOICE CABLES TO THE INDICATED TELECOMMUNICATION ROOM. FULLY TERMINATE CABLES AS SPECIFIED ON THE DRAWINGS. LEAVE NO GAPS IN THE NUMBERING SEQUENCE, UNLESS INDICATED AND VERIFIED BY THE ENGINEER.

TELECOM OUTSIDE PLANT NOTES

A. PROVIDE FOUR (4) 4" UNDERGROUND CONDUITS DEDICATED TO COMMUNICATION CABLING TO THE BUILDING. SEE CU101 FOR DETAILED UTILITY COORDINATION.

B. INSTALLATION OF OUTSIDE PLANT (OSP) CABLING MUST CONFORM TO THE SPECIFICATIONS DEFINED IN 33 82 00 AND THE MANUFACTURER INSTALLATION GUIDELINES

C. OSP BACKBONE OPTICAL FIBER WILL BE A MINIMUM OF A 24-STRAND SM OPTICAL FIBER CABLE. THIS CABLE MUST BE AN ALL DIELECTRIC, INDOOR/OUTDOOR RATED CABLE, TO ELIMINATE THE NEED FOR A TRANSITION SPLICE IN THE ENTRANCE FACILITY

D. OSP WILL BE FIBER CABLE ONLY AND WILL BE TAGGED UPON ENTRY AND EXIT OF A COMMUNICATIONS MAINTENANCE HOLE, HANDHOLE, OR SPLICE CASE. OSP CABLE TAGS WILL BE USED IN UNDERGROUND ENVIRONMENTS DESIGNED FOR SUCH ENVIRONMENTS

E. MATERIALS USED FOR THIS PROJECT MUST BE APPROVED PRIOR TO INSTALLATION.

F. OSP BACKBONE CABLES WILL BE LOOPED WITH 6 FEET OF SLACK IN THE EACH MAINTENANCE HOLE OR HANDHOLE FOR FUTURE SERVICEABILITY.

G. OSP GROUNDING TO MEET THE REQUIREMENTS AS DEFINED IN THE TIA 607-E AND MUST NOT CONTAIN ANY METALLIC STRENGTH MEMBER

H. CONTRACTOR MUST COORDINATE ALL ACCESS TO COMMUNICATIONS MAINTENANCE HOLES OR HANDHOLES NO LESS THAN 14 DAYS PRIOR TO PLANNED ENTRY AND MUST NOT REQUIRE ANY DOWNTIME FOR ANY EXISTING CABLE.

CABLE CHART

COLOR	NOTES	TYPE
GREEN	UNCLASSIFIED	MMF
RED	SECRET	MMF
YELLOW	TS/SCI	MMF
BLUE	SAP/SAR/SEC	MMF
ROSE/PINK	SAP/SAR/TS	MMF
ORANGE	SAP/SAR/SCI	MMF

ABBREVIATIONS

ABBREVIATION	DESCRIPTION
A	----------
AFF	ABOVE FINISHED FLOOR
AFG	ABOVE FINISHED GRADE
B	----------
BBC	BONDING BACKBONE CONDUCTOR
BEP	BUILDING ENTRANCE PROTECTOR
BLDG	BUILDING
BLK	BLACK/NON-SECURE NETWORK
C	----------
CAB	CABINET
CAT6	CATEGORY 6 UTP CABLE
D	----------
DTL	DETAIL
DWG	DRAWING
E	----------
EA	EACH
EF	ENTRANCE FACILITY
EL, ELEV	ELEVATION
ER	EQUIPMENT ROOM
ESS	ELECTRONIC SECURITY SYSTEM
F	----------
FA	FIRE ALARM
FDU	FIBER OPTIC DISTRIBUTION UNIT
FO	FIBER OPTIC
FOC	FIBER OPTIC CABLE
H	----------
HH	HANDHOLE
I	----------
ICT	INFORMATION AND TECHNOLOGY SYSTEM
L	----------
LC	TYPE OF FIBER OPTIC CONNECTOR
M	----------
MISC	MISCELLANEOUS
MMF	MULTIMODE FIBER OPTIC CABLE
MT, MTD	MOUNT, MOUNTED
N	----------
NA, N/A	NOT APPLICABLE
NEC	NATIONAL ELECTRICAL CODE
NESC	NATIONAL ELECTRICAL SAFETY CODE
NIPRNET	NON-CLASSIFIED INTERNET PROTOCOL ROUTER NETWORK
NTS	NOT TO SCALE
O	----------
OC	ON CENTER
OSP	OUTSIDE PLANT
P	----------
PBB	PRIMARY BONDING BUSBAR
PET	PROTECTION ENTRANCE TERMINAL
PNL	PANEL
Q	----------
QTY, #	QUANTITY
R	----------
RAF	RAISED ACCESS FLOOR
RBB	RACK BONDING BUSBAR
RBC	RACK BONDING CONDUCTOR
RF	RADIO FREQUENCY
RU	RACK UNITS
S	----------
SBB	SECONDARY BONDING BUSBAR
SCP	SECURITY CONTROL PANEL
SM	SINGLEMODE
SMF	SINGLEMODE FIBER
ST	STRAND
T	----------
TB	TERMINAL BLOCK
TEF	TELECOMMUNICATIONS ENTRANCE FACILITY
TIA	TELECOMMUNICATION INDUSTRY ASSOCIATION
TYP	TYPICAL
U	----------
UON	UNLESS OTHERWISE NOTED
W	----------
W/O	WITHOUT
WAO	WORK AREA OUTLET
WAP	WIRELESS ACCESS POINT

TELECOMMUNICATIONS LEGEND

SYMBOLS	DESCRIPTION
▽	U/OUTLET- (2) GREEN 2-STRAND MMF
▼	R/OUTLET- (2) RED 2-STRAND MMF
▼ A	R/OUTLET TYPE A - (1) RED - 2 STRAND MMF (2) YELLOW - 2 STRAND MMF
▼ B	R/OUTLET TYPE B - (2) ROSE/PINK- 2 STRAND MMF (2) ORANGE - 2 STRAND MMF (2) BLUE - 2 STRAND MMF
▼ AV	R/AV OUTLET- (1) RED 2-STRAND MMF, (1) YELLOW, (1) ORANGE 2-STRAND MMF TO TEF AND (1) HDMI POINT TO POINT SAME OUTLET IN SAME SPACE
▽	U/FLOOR OUTLET- (2) GREEN 2-STRAND MMF
▼	R/FLOOR OUTLET- (2) RED 2-STRAND MMF
▼ A	R/FLOOR OUTLET TYPE A - (1) RED - 2 STRAND MMF (2) YELLOW - 2 STRAND MMF (2) BLUE - 2 STRAND MMF
▼ B	R/ FLOOR OUTLET TYPE B - (2) PURPLE - 2 STRAND MMF (2) ORANGE - 2 STRAND MMF
▽ EQ	U/EQUIPMENT OUTLET - (1) GREEN 2-STRAND MMF COORDINATE WITH EQUIPMENT INSTALLER
	BOX DENOTES FLOOR MOUNTED DEVICE
ZB ZXX	ZONE BOX SEE DETAILS Z = ZONE XX = ZONE BOX NUMBER
	ZONE BOUNDARY LINE
	CABLE TRAY, TYPE AND DIMENSIONS AS INDICATED ON DRAWING CABLE TRAY TAGS
	CABLE TRAY IDENTIFICATION TAG
INCH x INCH BOT = XX FT	CABLE TRAY SIZE CABLE TRAY HEIGHT BOT = BOTTOM OF TRAY

PAGING AND WHITE NOISE LEGEND

SYMBOLS	DESCRIPTION
S *W	SPEAKER FOR PUBLIC ANNOUNCEMENT UNLESS NOTED WITH 'W', PENDANT MOUNTED AT THE SAME HEIGHT AS LIGHT FIXTURES IN ROOM. *W = SPEAKERS WITH 'W' INDICATES DEDICATED WHITE NOISE SPEAKER
MIC	LOCAL PAGING MICROPHONE

REGISTERED COMMUNICATIONS DISTRIBUTION DESIGNER
BICSI
David Robinson
BICSI ID #185353
08 MAY 24
RCDD

MARK	DESCRIPTION	DATE

DESIGNED BY: S. SELF
DRAWN BY: C. TINKER
CHECKED BY: J. HIMES
SUBMITTED BY: J. PEARSON
SIZE: ANSI D
ISSUE DATE: MAY 2026
ANG PROJECT NO.: PBXP222050
CONTRACT NO.: FA8803-21-D-0008
TASK ORDER NO.: W50S8R23F0009

OHIO AIR NATIONAL GUARD
MANSFIELD LAHM AIR NATIONAL GUARD BASE, OH

JACOBS GOVERNMENT SERVICES
2600 MICHELSON SR, STE 500
IRVINE, CA 92612

MANSFIELD LAHM AIR NATIONAL GUARD BASE, OH
REPAIR B403 FOR CYBER
FA877006
TELECOMMUNICATION LEGEND AND GENERAL NOTES

SHEET ID
T-001

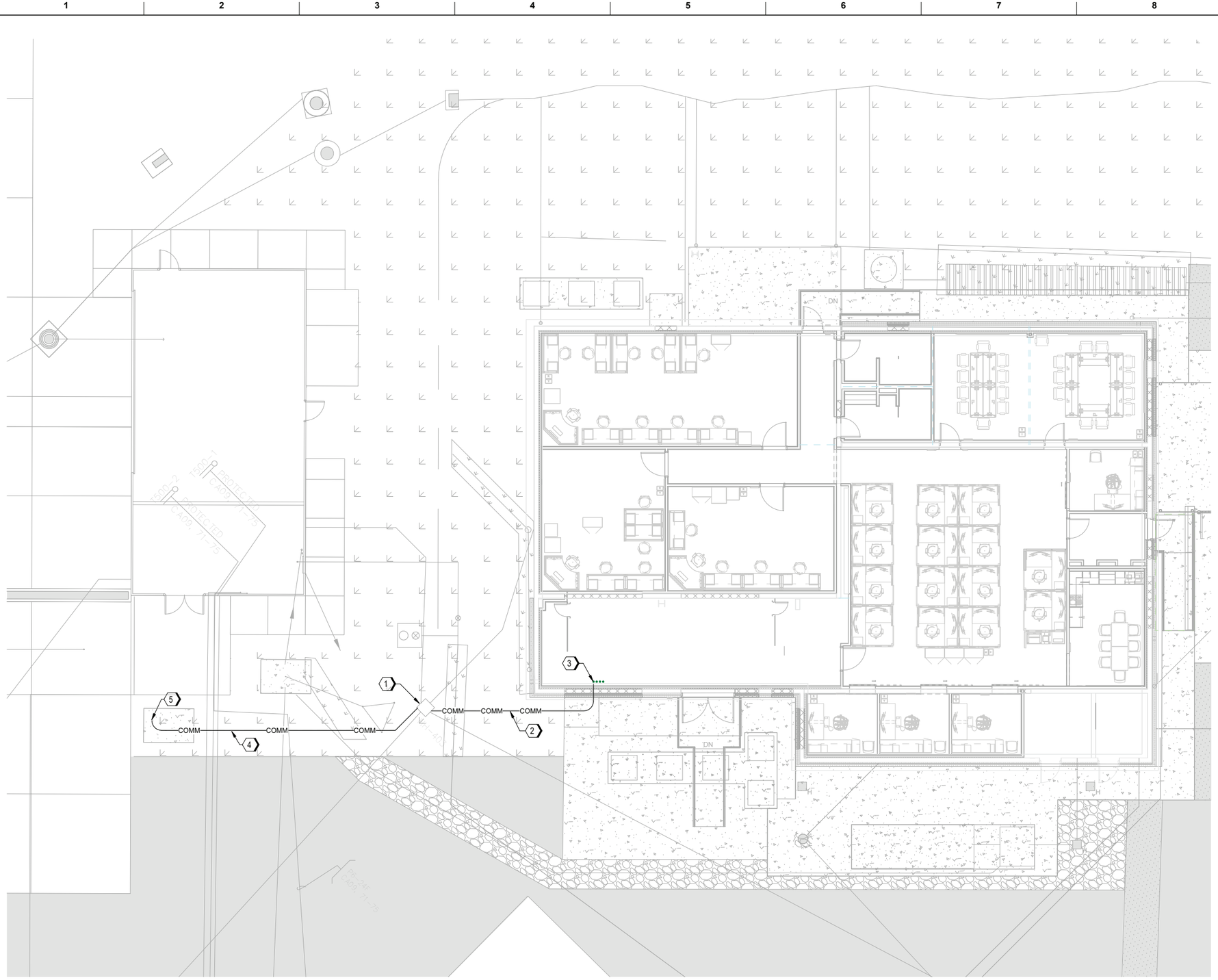

A1 TELECOMMUNICATIONS SITE PLAN
SCALE 1/8" = 1'-0"

GENERAL SHEET NOTES

A. REFER TO SHEET T-001 FOR TELECOMMUNICATIONS GENERAL NOTES, ABBREVIATION AND LEGEND.

B. COORDINATE ALL WORK WITH ALL TRADES. REFER TO CU101 AND FIELD COORDINATE ALL RELATED SITE DOCUMENTS.

#SHEET KEYNOTES

1. EXISTING COMMUNICATIONS HANDHOLE HH-403. PROTECT EXISTING UTILITIES PASSING THROUGH AND UPGRADE TO LOCKABLE COVER.
2. PROVIDE 4-WAY DUCTBANK TO TEF ROOM. REFER TO A1/T-505 DETAIL.
3. STUB UP DUCTBANK IN TEF. REFER TO F1/T-505 DETAIL AND E1/T-401 FOR CONTINUATION.
4. PROVIDE 2-WAY DUCTBANK TO COMMUNICATIONS ENCLOSURE. REFER TO DETAILS D1/T-505 AND E3/E-503.
5. PROVIDE OUTDOOR NEMA 4 ENCLOSURE WITH DIN RAIL MOUNTED FIBER TERMINATION. REFER TO DETAIL E3/E-503.

GRAPHIC SCALE(S)

PLAN NORTH

0 4' 8' 16' 24'
SCALE: 1/8" = 1'-0"

REGISTERED COMMUNICATIONS DISTRIBUTION DESIGNER
Bicsi
David Robinson
BICSI ID #185303
08 MAY 26
RCDD

MARK	DESCRIPTION	DATE

ISSUE DATE:	MAY 2026
ANG PROJECT NO.:	PBXP22050
CONTRACT NO.:	FA8803-21-D-0008
TASK ORDER NO.:	W50S8R23F0009

DESIGNED BY:	S. SELF
DRAWN BY:	C. TINKER
CHECKED BY:	J. HIMES
SUBMITTED BY:	D. PEARSON
	ANSI D

OHIO AIR NATIONAL GUARD
MANSFIELD LAHM AIR NATIONAL GUARD BASE, OH

JACOBS GOVERNMENT SERVICES
2600 MICHELSON SR, STE 500
IRVINE, CA 92612

MANSFIELD LAHM AIR NATIONAL GUARD BASE, OH
REPAIR B403 FOR CYBER
FA877006
TELECOMMUNICATION SITE PLAN

SHEET ID
TS101

TYPE B-3 FINAL

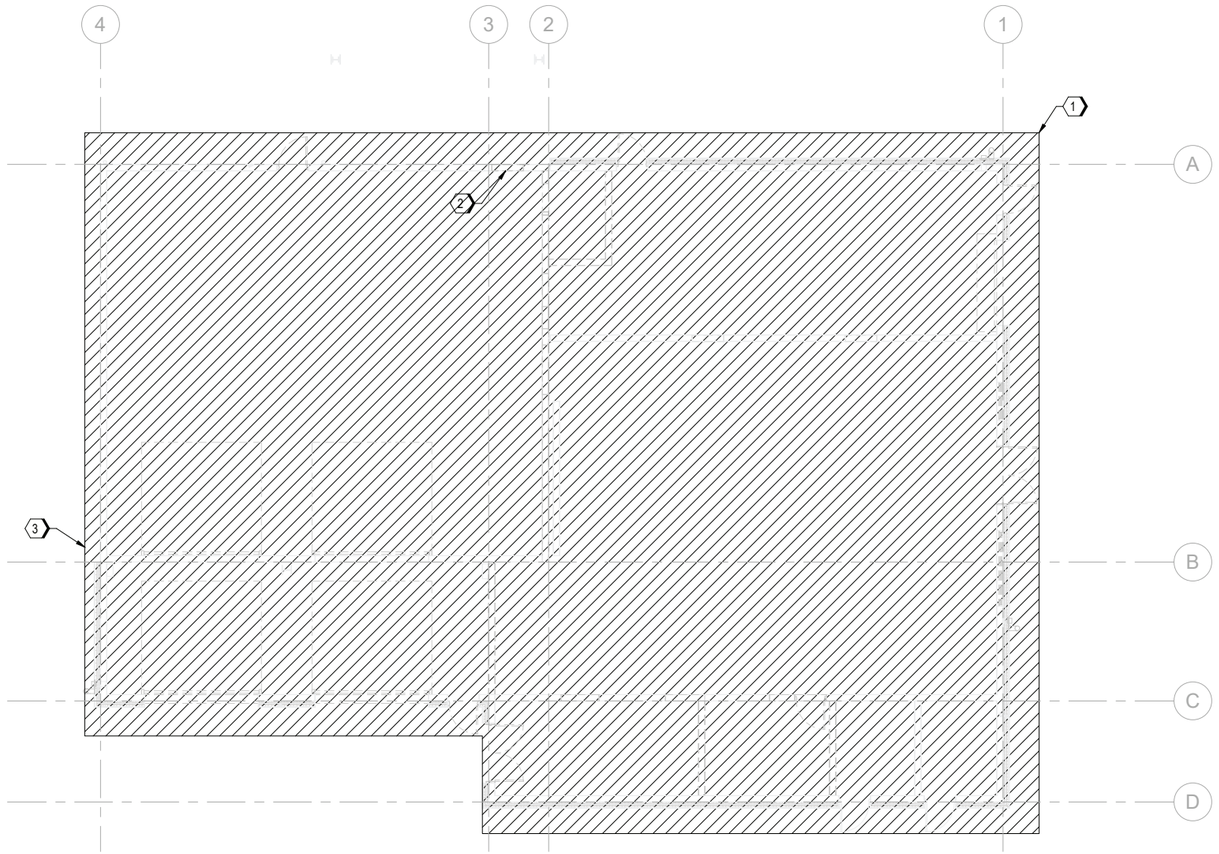

A1 TELECOMMUNICATION DEMOLITION PLAN
SCALE 1/8" = 1'-0"

GENERAL SHEET NOTES

A. REFER TO SHEET T-001 FOR TELECOMMUNICATIONS GENERAL NOTES, ABBREVIATION AND LEGEND.

#SHEET KEYNOTES

1. DEMOLISH ALL EXISTING TELECOMMUNICATIONS INFRASTRUCTURE WITHIN THE SPACE INCLUDING CONDUIT, SUPPORTS AND BACKBOARDS.
2. END-POINT FOR EXISTING FIBER OPTIC CABLING. REMOVE BACK TO EXISTING MAINTENANCE HOLE. PROTECT CABLING TO GREATEST EXTENT POSSIBLE.
3. EXISTING CONDUIT PENETRATION FOR COMMUNICATIONS CABLING ENTRANCE. DEMOLISH COMPLETELY FROM BUILDING AND REMOVE CONDUITS TO MAINTENANCE HOLE.

GRAPHIC SCALE(S)

0 4' 8' 16' 24'
SCALE: 1/8" = 1'-0"

PLAN NORTH

REGISTERED COMMUNICATIONS DISTRIBUTION DESIGNER
Bicsi
David Robinson
BICSI ID # 185303
08 MAY 26
RCDD

MARK	DESCRIPTION	DATE

ISSUE DATE:	MAY 2026
ANG PROJECT NO.:	PBXP222050
CONTRACT NO.:	FA8803-21-D-0008
TASK ORDER NO.:	W50S8R23F0009
DESIGNED BY:	S. SELF
DRAWN BY:	C. TINKER
CHECKED BY:	J. HIMES
SUBMITTED BY:	D. PEARSON
QTY:	
ANSI D	

OHIO AIR NATIONAL GUARD
MANSFIELD LAHM AIR NATIONAL GUARD BASE, OH

JACOBS GOVERNMENT SERVICES
2600 MICHELSON SR. STE 500
IRVINE, CA 92612

MANSFIELD LAHM AIR NATIONAL GUARD BASE, OH
REPAIR B403 FOR CYBER
FA877006
TELECOMMUNICATION DEMOLITION FLOOR PLAN

SHEET ID

TD101

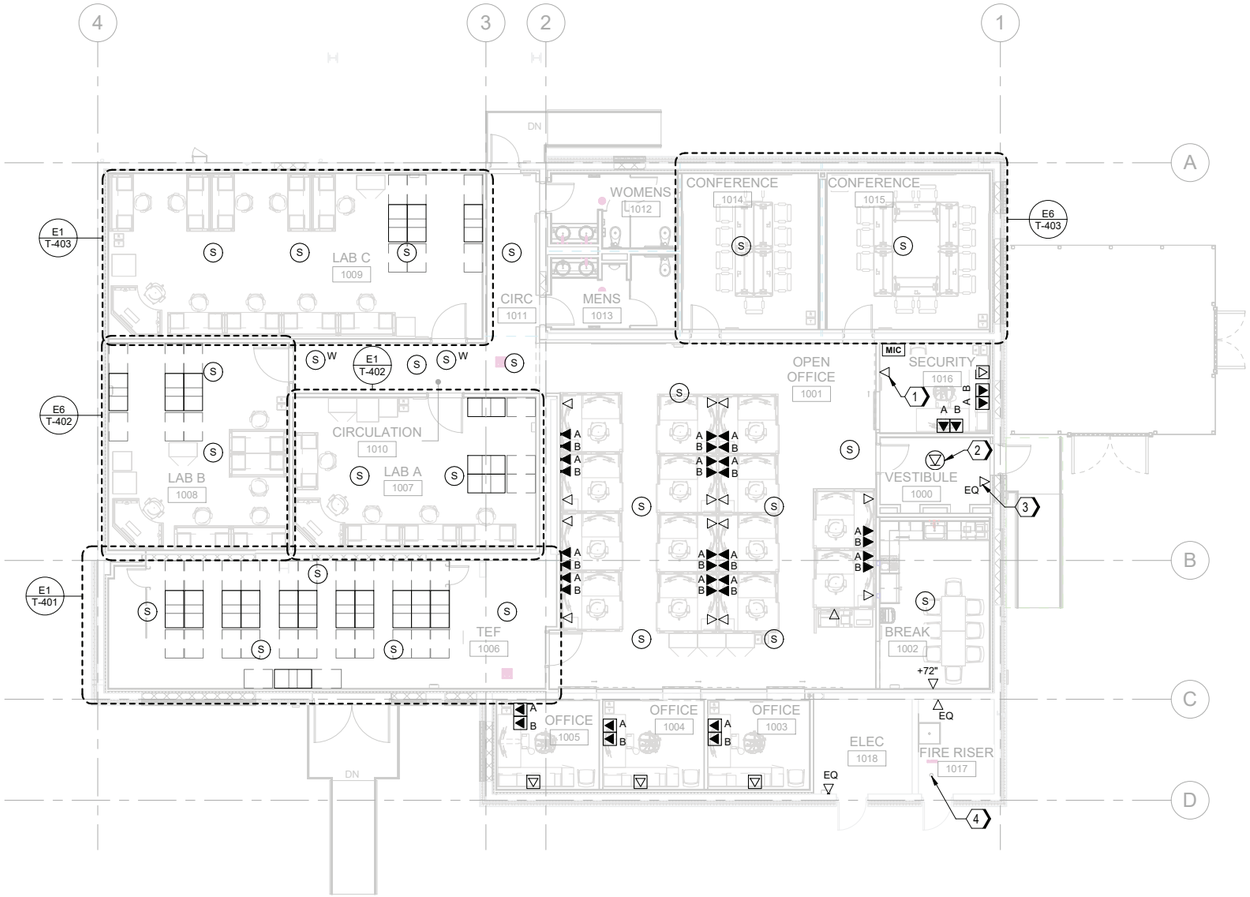

A1 GROUND FLOOR TELECOM PLAN
SCALE 1/8" = 1'-0"

GENERAL SHEET NOTES

A. REFER TO SHEET T-001 FOR TELECOMMUNICATIONS GENERAL NOTES, ABBREVIATION AND LEGEND.

B. REFER TO SHEETS T-601 AND T-602 FOR TELECOMMUNICATIONS ONE-LINE DIAGRAMS.

C. RUN CABLING BACK TO ZONE BOXES LOCATED WITHIN RESPECTIVE ZONES.

D. COORDINATE COVER PLATE SIZE, COLOR, AND PLACEMENT WITH GOVERNMENT FOR CONTRACTOR PROVIDED COVER PLATES TO BE INSTALLED IN GOVERNMENT FURNITURE.

E. THE CONTRACTOR MUST ADHERE TO THE BASE STANDARDS FOR THE LABELING TO BE USED FOR THE CONSTRUCTION OF THIS PROJECT IN ACCORDANCE WITH TIA-606.

F. TELECOM OUTLETS SHOWN IN FURNITURE MUST ROUTE WITHIN FURNITURE, THROUGH RAISED FLOOR (SEE F1/T-502) AND AS NOTED IN SINGLE LINE DIAGRAM T-602.

#SHEET KEYNOTES

1. FIRE ALARM DATA CONNECTION, COORDINATE TERMINATION WITHIN FIRE ALARM PANEL WITH FIRE ALARM VENDOR.
2. DATA FOR CEILING MOUNTED CAMERA. ROUTE FIBER THROUGH NON-SECURE CHASE.
3. DATA FOR SECURITY EQUIPMENT.
4. PROVIDE 2-INCH WEATHERHEAD FOR PARAPET-MOUNTED CAMERAS. COORDINATE ALL WORK. SEE TY SERIES DRAWINGS.

GRAPHIC SCALE(S)

0 4' 8' 16' 24'
SCALE: 1/8" = 1'-0"

PLAN NORTH

REGISTERED COMMUNICATIONS DISTRIBUTION DESIGNER
Bicsi
David Robinson
BICSI ID # 185303
08 MAY 26
RCDD

MARK	DESCRIPTION	DATE

ISSUE DATE: MAY 2026
ANG PROJECT NO.: PBXP222050
CONTRACT NO.: FA8903-21-D-0008
TASK ORDER NO.: W50S8R23F0009

DESIGNED BY: S. SELF
DRAWN BY: C. TINKER
CHECKED BY: J. HIMES
SUBMITTED BY: D. PEARSON
SIZE: ANSI D

OHIO AIR NATIONAL GUARD
MANSFIELD LAHM AIR NATIONAL GUARD BASE, OH

JACOBS GOVERNMENT SERVICES
2600 MICHELSON SR, STE 500
IRVINE, CA 92612

MANSFIELD LAHM AIR NATIONAL GUARD BASE, OH
REPAIR B403 FOR CYBER
FA877006
TELECOMMUNICATION FLOOR PLAN

SHEET ID
T-101

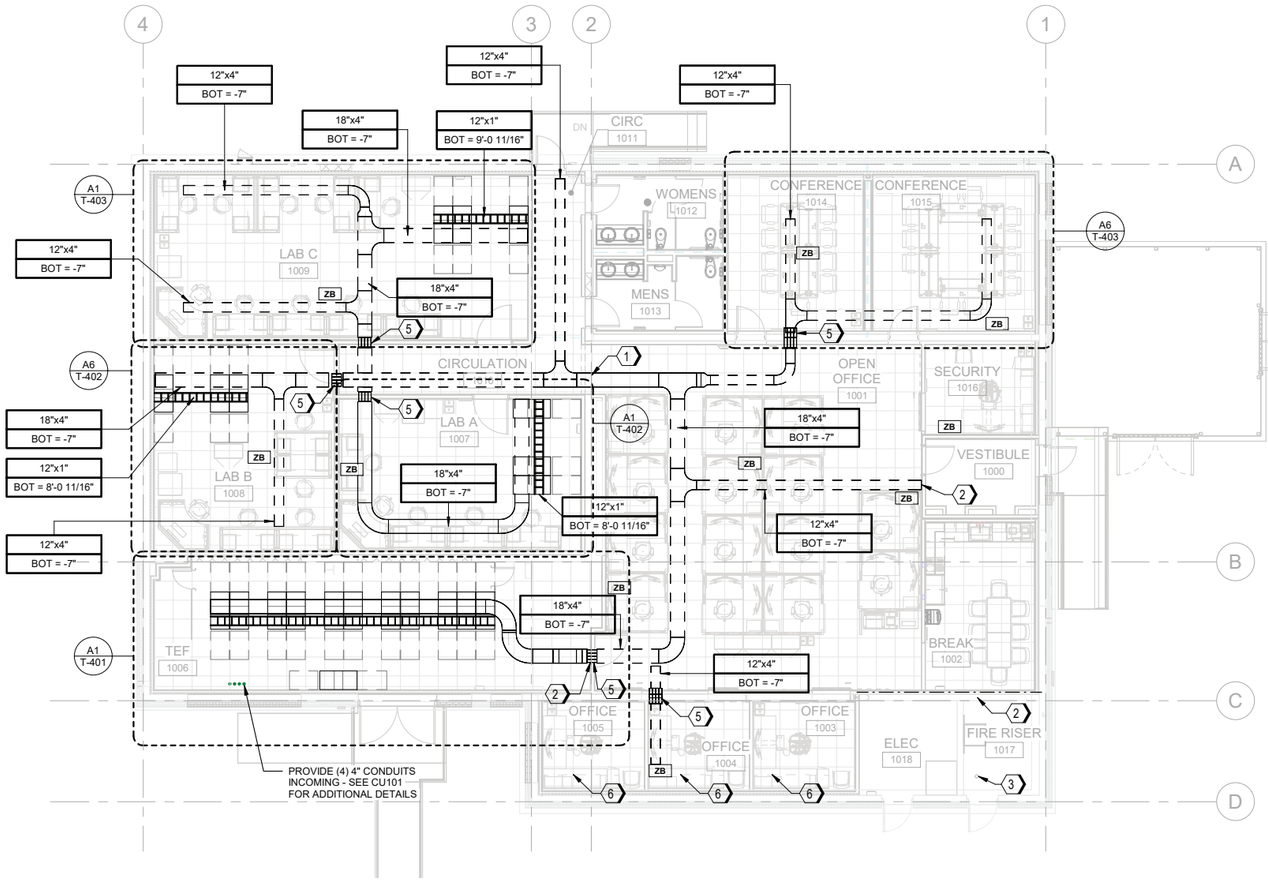

A1 GROUND FLOOR CABLE TRAY PLAN
SCALE 1/8" = 1'-0"

GENERAL SHEET NOTES

A. REFER TO SHEET T-001 FOR TELECOMMUNICATIONS GENERAL NOTES, ABBREVIATION AND LEGEND.

B. REFER TO SHEETS T-601 AND T-602 FOR TELECOMMUNICATIONS ONE-LINE DIAGRAMS.

C. RUN CABLING BACK TO ZONE BOXES LOCATED WITHIN RESPECTIVE ZONES.

D. COORDINATE COVER PLATE SIZE, COLOR, AND PLACEMENT WITH GOVERNMENT FOR CONTRACTOR PROVIDED COVER PLATES TO BE INSTALLED IN GOVERNMENT FURNITURE.

E. THE CONTRACTOR MUST ADHERE TO THE BASE STANDARDS FOR THE LABELING TO BE USED FOR THE CONSTRUCTION OF THIS PROJECT IN ACCORDANCE WITH TIA-606

(#) SHEET KEYNOTES

1. PROVIDE SIX INCH GAP IN CABLE TRAY AT EXPANSION JOINT THIS LOCATION.
2. PROVIDE PENETRATION FROM SECURE TO NON-SECURE SPACE FOR ROUTING OF FIBER OPTIC CABLING ONLY. MAINTAIN ALL WALL RATINGS, COORDINATE ALL WORK.
3. PROVIDE 2" WEATHERHEAD FOR ROUTING FIBER OPTIC CABLE TO ROOF IN SERVICE OF PARAPET MOUNTED CAMERA LOCATIONS.
4. ROOF PARAPET CAMERA LOCATION. PROVIDE GREEN 2-STRAND FIBER OPTIC CABLE AS INDICATED ON SECURITY (TY-SERIES) DRAWINGS.
5. FOUR (4) 4" FIRE RATED RE-ENTERABLE AND GANGABLE FIRESTOP PENETRATION. MAINTAIN ALL PARTITION RATINGS.
6. PROVIDE EXTRA CABLE TO ALLOW FOR FUTURE RECONFIGURATION OF OFFICE FURNITURE LAYOUTS.

GRAPHIC SCALE(S)

0 4' 8' 16' 24'
SCALE: 1/8" = 1'-0"

PLAN NORTH

REGISTERED COMMUNICATIONS DISTRIBUTION DESIGNER
Bicsi
David Robinson
BICSI ID # 185303
08 MAY 26
RCDD

MARK	DESCRIPTION	DATE

ISSUE DATE: MAY 2026
ANG PROJECT NO.: PBXP22050
CONTRACT NO.: FA8903-21-D-0008
TASK ORDER NO.: W50S8R23F0009

DESIGNED BY: S. SELF
DRAWN BY: C. TINKER
CHECKED BY: J. HIMES
SUBMITTED BY: D. PEARSON
SIZE: ANSI D

OHIO AIR NATIONAL GUARD
MANSFIELD LAHM AIR NATIONAL GUARD BASE, OH

JACOBS GOVERNMENT SERVICES
2600 MICHELSON SR, STE 500
IRVINE, CA 92612

MANSFIELD LAHM AIR NATIONAL GUARD BASE, OH
REPAIR B403 FOR CYBER
FA877006
TELECOMMUNICATION CABLE TRAY PLAN

SHEET ID
T-102

TYPE B-3 FINAL

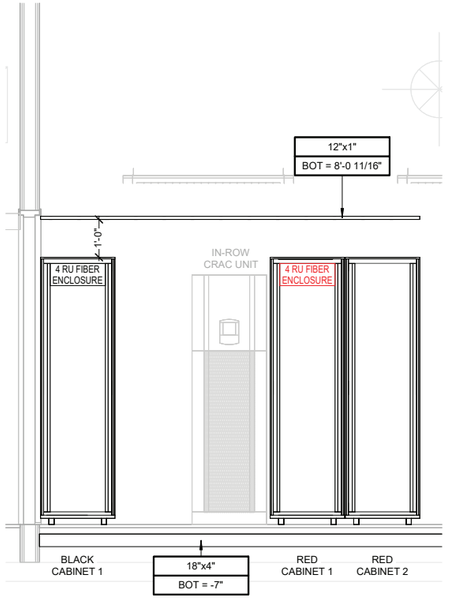

E1 LAB A 1007 - CABINET ELEVATION
SCALE 1/2" = 1'-0"

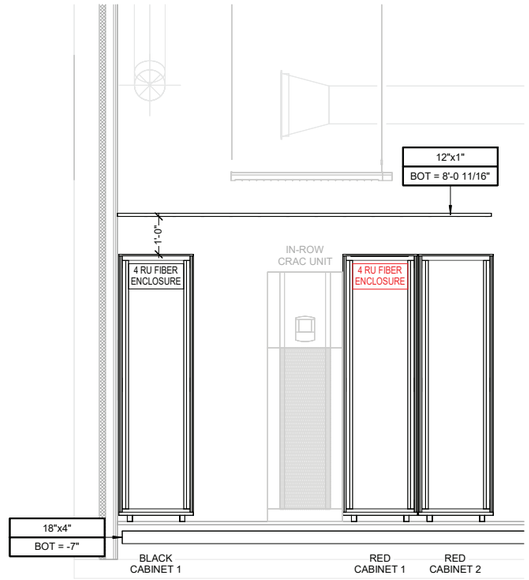

E3 LAB B 1008 - CABINET ELEVATION
SCALE 1/2" = 1'-0"

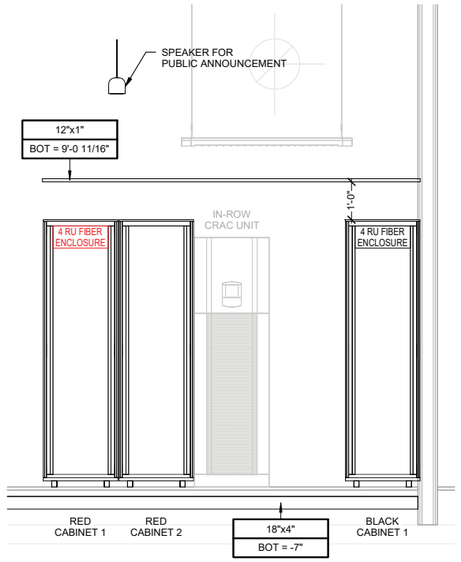

E6 LAB C 1009 - CABINET ELEVATIONS
SCALE 1/2" = 1'-0"

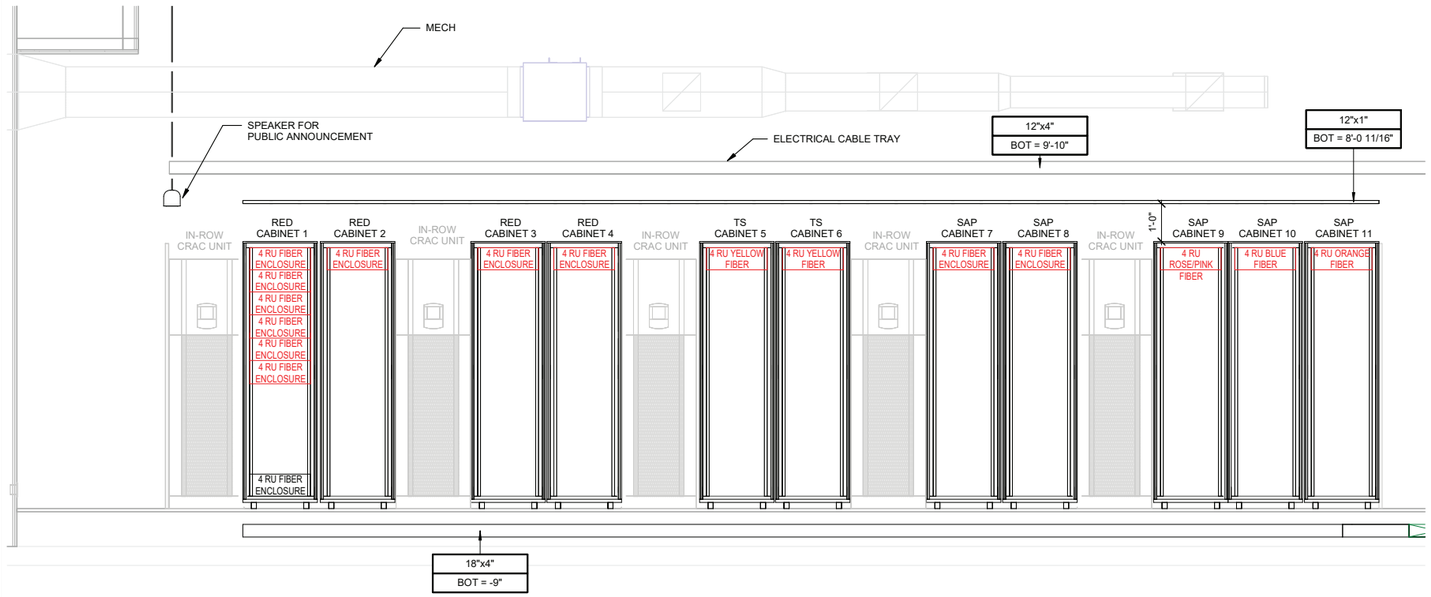

A1 TEF ROOM - RED CABINET ELEVATION
SCALE 1/2" = 1'-0"

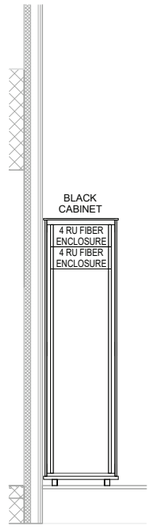

A8 TEF ROOM BLACK CABINET
SCALE 1/2" = 1'-0"

GENERAL SHEET NOTES

A. REFER TO SHEET T-001 FOR TELECOMMUNICATIONS GENERAL NOTES, ABBREVIATION AND LEGEND.

B. REFER TO SHEETS T-601 AND T-602 FOR TELECOMMUNICATIONS ONE-LINE DIAGRAMS.

C. RUN CABLING BACK TO ZONE BOXES LOCATED WITHIN RESPECTIVE ZONES.

D. THE CONTRACTOR MUST ADHERE TO THE BASE STANDARDS FOR THE LABELING TO BE USED FOR THE CONSTRUCTION OF THIS PROJECT IN ACCORDANCE WITH TIA-606.

GRAPHIC SCALE(S)

0 1' 2' 4' 6'
SCALE: 1/2" = 1'-0"

REGISTERED COMMUNICATIONS DISTRIBUTION DESIGNER
Bicsi
David Robinson
BICSI ID #185303
08 MAY 26
RCDD

MARK	DESCRIPTION	DATE

DESIGNED BY: S. SELF
DRAWN BY: C. TINKER
CHECKED BY: J. HIMES
SUBMITTED BY: J.PEARSON
SIZE: ANSI D
ISSUE DATE: MAY 2026
ANG PROJECT NO.: PBXP222050
CONTRACT NO.: FA8903-21-D-0008
TASK ORDER NO.: W50S8R23F0009

OHIO AIR NATIONAL GUARD
MANSFIELD LAHM AIR NATIONAL GUARD BASE, OH

JACOBS GOVERNMENT SERVICES
2600 MICHELSON SR, STE 500
IRVINE, CA 92812

MANSFIELD LAHM AIR NATIONAL GUARD BASE, OH
REPAIR B403 FOR CYBER
FA877006
TELECOMMUNICATION CABINET ELEVATIONS

SHEET ID
T-301

TYPE B-3 FINAL

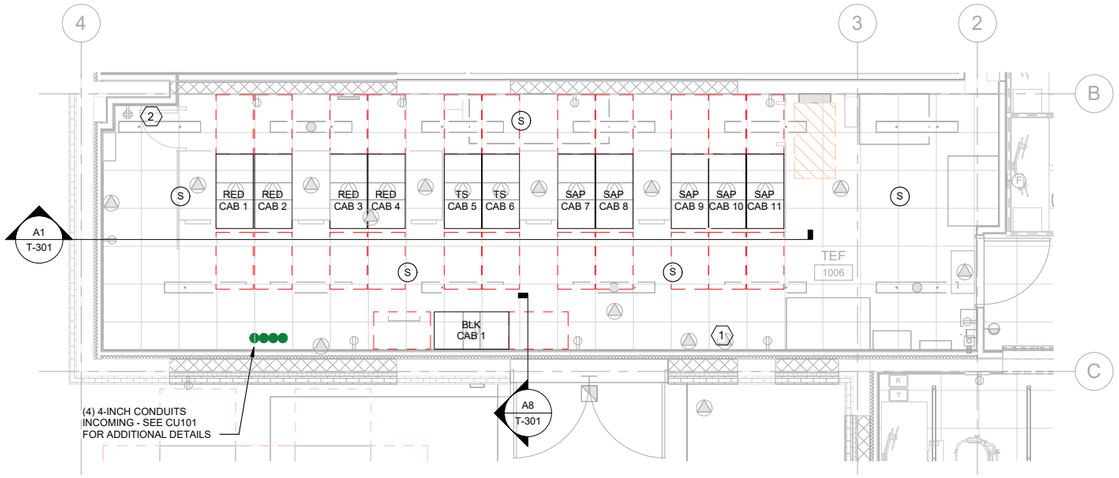

E1 TEF 1006 EQUIPMENT PLAN
SCALE 1/4" = 1'-0"

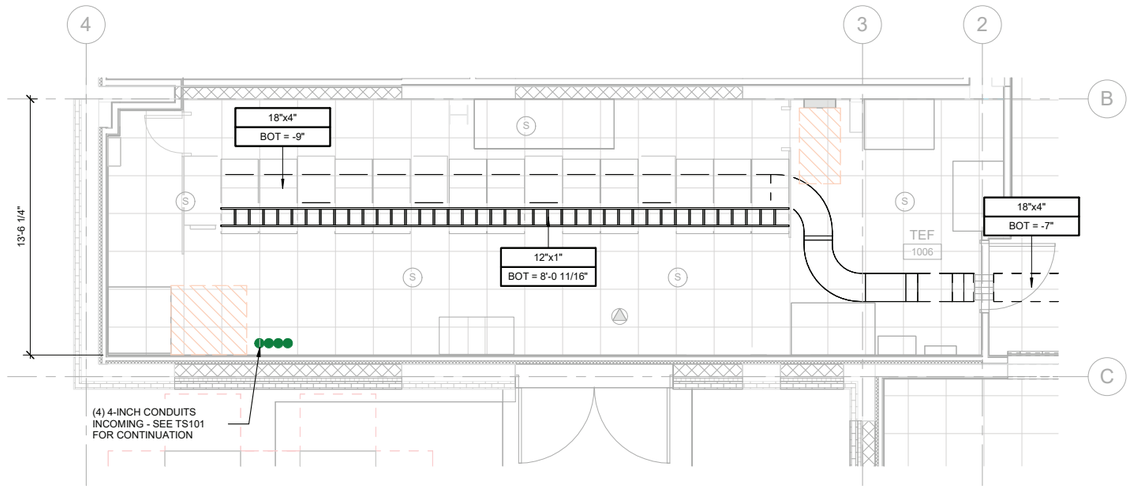

A1 TEF 1006 TRAY PLAN
SCALE 1/4" = 1'-0"

GENERAL SHEET NOTES

A. REFER TO SHEET T-001 FOR TELECOMMUNICATIONS GENERAL NOTES, ABBREVIATION AND LEGEND.

B. REFER TO SHEETS T-601 AND T-602 FOR TELECOMMUNICATIONS ONE-LINE DIAGRAMS.

C. RUN CABLING BACK TO ZONE BOXES LOCATED WITHIN RESPECTIVE ZONES.

D. THE CONTRACTOR MUST ADHERE TO THE BASE STANDARDS FOR THE LABELING TO BE USED FOR THE CONSTRUCTION OF THIS PROJECT IN ACCORDANCE WITH TIA-606.

E. FOR EACH CABINET SHOWN, CONTRACTOR MUST PROVIDE AND INSTALL IN ACCORDANCE WITH CABINET SPECIFICATIONS, AND PROVIDE AND INSTALL A VERTICAL POWER DISTRIBUTION UNIT IN REAR OF CABINET.

#SHEET KEYNOTES

1. SPACE RESERVED FOR ELECTRONIC SECURITY SYSTEMS. PROVIDE 2-STRAND FIBER CONNECTIONS AS REQUIRED.

2. SPACE RESERVED FOR LOCAL PAGING AND WHITE NOISE SYSTEM HEADEND.

GRAPHIC SCALE(S)

0 2' 4' 8' 12'
SCALE: 1/4" = 1'-0"

PLAN NORTH

REGISTERED COMMUNICATIONS DISTRIBUTION DESIGNER
Bicsi
David Robinson
BICSI ID # 185303
08 MAY 26
RCDD

MARK	DESCRIPTION	DATE

DESIGNED BY: S. SELF
DRAWN BY: C. TINKER
CHECKED BY: J. HIMES
SUBMITTED BY: J. PEARSON
SIZE: ANSI D
ISSUE DATE: MAY 2026
ANG PROJECT NO.: PBXP222050
CONTRACT NO.: FA8803-21-D-0008
TASK ORDER NO.: W50S8R23F0009

OHIO AIR NATIONAL GUARD
MANSFIELD LAHM AIR NATIONAL GUARD BASE, OH

JACOBS GOVERNMENT SERVICES
2600 MICHELSON SR, STE 500
IRVINE, CA 92812

MANSFIELD LAHM AIR NATIONAL GUARD BASE, OH
REPAIR B403 FOR CYBER
FA877006
TELECOMMUNICATION ENLARGED PLANS

SHEET ID
T-401

TYPE B-3 FINAL

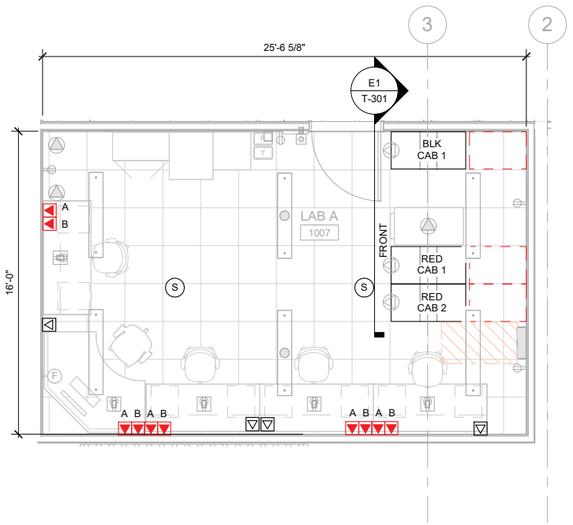

E1 LAB A 1007 EQUIPMENT PLAN
SCALE 1/4" = 1'-0"

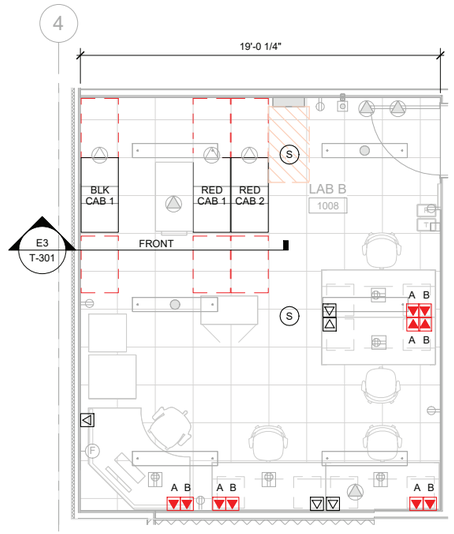

E6 LAB B 1008 EQUIPMENT PLAN
SCALE 1/4" = 1'-0"

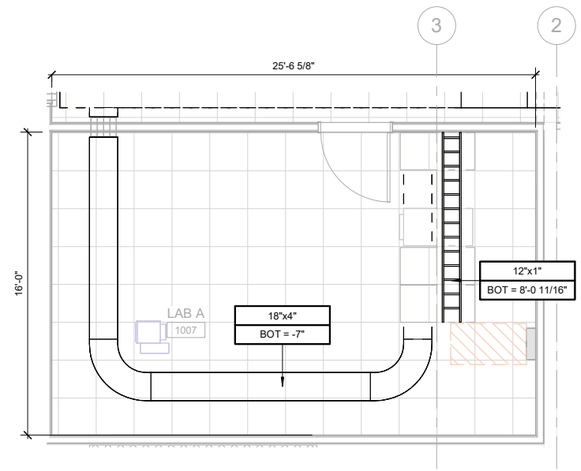

A1 LAB A 1007 TRAY PLAN
SCALE 1/4" = 1'-0"

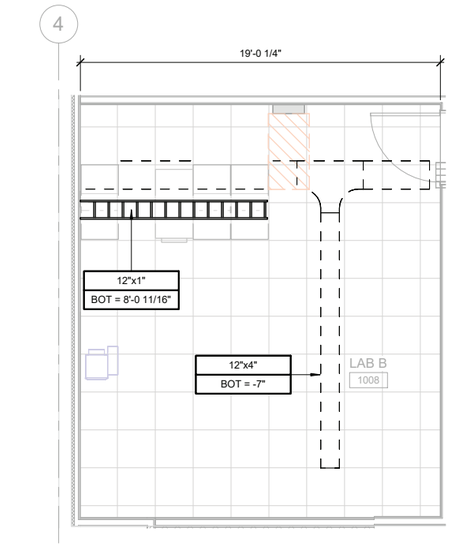

A6 LAB B 1008 TRAY PLAN
SCALE 1/4" = 1'-0"

GENERAL SHEET NOTES

A. REFER TO SHEET T-001 FOR TELECOMMUNICATIONS GENERAL NOTES, ABBREVIATION AND LEGEND.

B. REFER TO SHEETS T-601 AND T-602 FOR TELECOMMUNICATIONS ONE-LINE DIAGRAMS.

C. RUN CABLING BACK TO ZONE BOXES LOCATED WITHIN RESPECTIVE ZONES.

D. COORDINATE COVER PLATE SIZE, COLOR, AND PLACEMENT WITH GOVERNMENT FOR CONTRACTOR PROVIDED COVER PLATES TO BE INSTALLED IN GOVERNMENT FURNITURE.

E. THE CONTRACTOR MUST ADHERE TO THE BASE STANDARDS FOR THE LABELING TO BE USED FOR THE CONSTRUCTION OF THIS PROJECT IN ACCORDANCE WITH TIA-606.

F. FOR EACH CABINET SHOWN, CONTRACTOR MUST PROVIDE AND INSTALL IN ACCORDANCE WITH CABINET SPECIFICATIONS, AND PROVIDE AND INSTALL A VERTICAL POWER DISTRIBUTION UNIT IN REAR OF CABINET.

GRAPHIC SCALE(S)

0 2' 4' 8' 12'
SCALE: 1/4" = 1'-0"

PLAN NORTH

REGISTERED COMMUNICATIONS DISTRIBUTION DESIGNER
Bicsi
David Robinson
BICSI ID # 185303
08 MAY 26
RCDD

MARK	DESCRIPTION	DATE

DESIGNED BY: S. SELF
DRAWN BY: C. TINKER
CHECKED BY: J. HIMES
SUBMITTED BY: J. PEARSON
SIZE: ANSI D
ISSUE DATE: MAY 2026
ANG PROJECT NO.: PBXP222050
CONTRACT NO.: FA8903-21-D-0008
TASK ORDER NO.: W50S8R23F0009

OHIO AIR NATIONAL GUARD
MANSFIELD LAHM AIR NATIONAL GUARD BASE, OH

JACOBS GOVERNMENT SERVICES
2600 MICHELSON SR, STE 500
IRVINE, CA 92612

MANSFIELD LAHM AIR NATIONAL GUARD BASE, OH
REPAIR B403 FOR CYBER
FA8777006
TELECOMMUNICATION ENLARGED PLANS

SHEET ID
T-402

TYPE B-3 FINAL

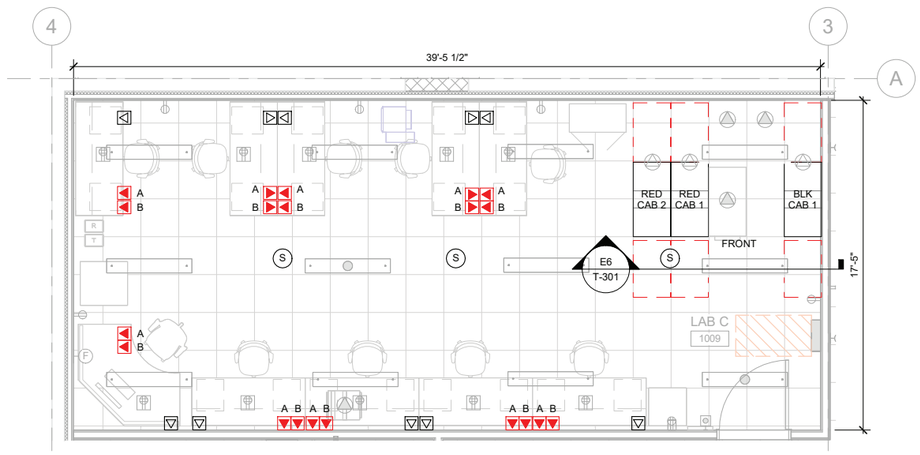

E1 LAB C 1009 EQUIPMENT PLAN
SCALE 1/4" = 1'-0"

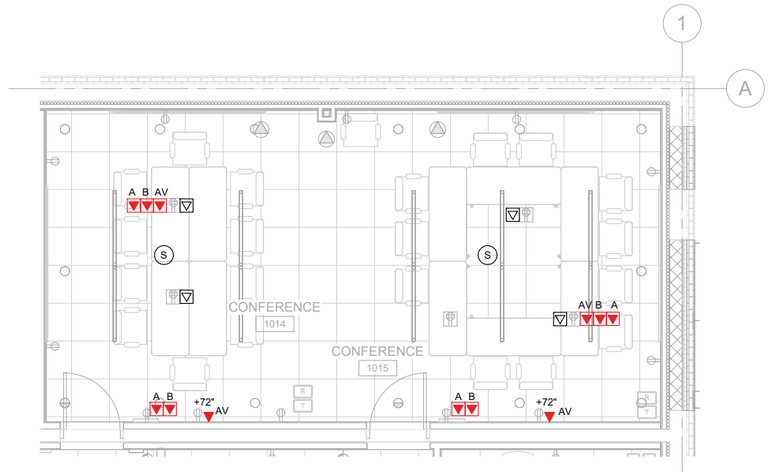

E6 CONFERENCE ROOMS EQUIPMENT PLAN
SCALE 1/4" = 1'-0"

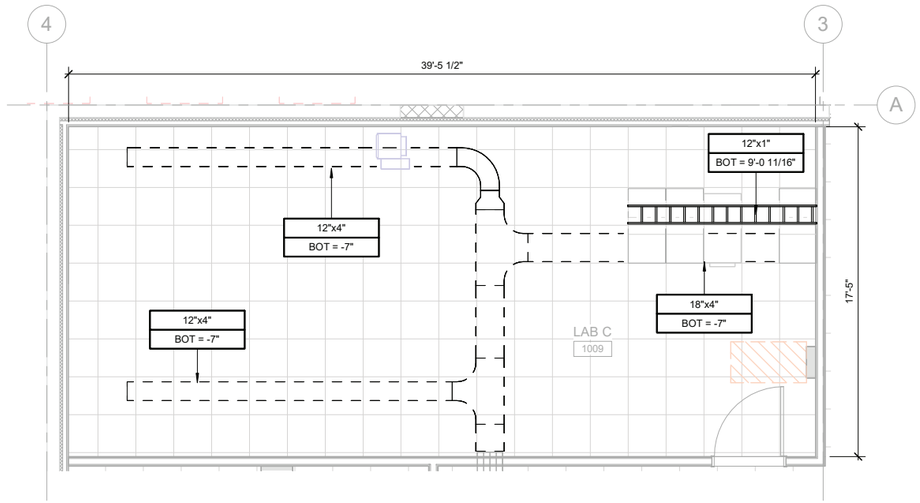

A1 LAB C 1009 TRAY PLAN
SCALE 1/4" = 1'-0"

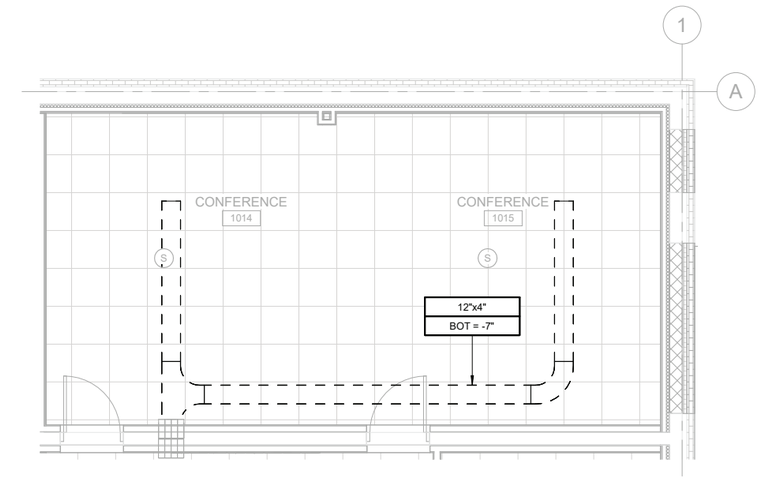

A6 CONFERENCE ROOMS TRAY PLAN
SCALE 1/4" = 1'-0"

GENERAL SHEET NOTES

A. REFER TO SHEET T-001 FOR TELECOMMUNICATIONS GENERAL NOTES, ABBREVIATION AND LEGEND.

B. REFER TO SHEETS T-601 AND T-602 FOR TELECOMMUNICATIONS ONE-LINE DIAGRAMS.

C. RUN CABLING BACK TO ZONE BOXES LOCATED WITHIN RESPECTIVE ZONES.

D. COORDINATE COVER PLATE SIZE, COLOR, AND PLACEMENT WITH GOVERNMENT FOR CONTRACTOR PROVIDED COVER PLATES TO BE INSTALLED IN GOVERNMENT FURNITURE.

E. THE CONTRACTOR MUST ADHERE TO THE BASE STANDARDS FOR THE LABELING TO BE USED FOR THE CONSTRUCTION OF THIS PROJECT IN ACCORDANCE WITH TIA-606.

F. FOR EACH CABINET SHOWN, CONTRACTOR MUST PROVIDE AND INSTALL IN ACCORDANCE WITH CABINET SPECIFICATIONS, AND PROVIDE AND INSTALL A VERTICAL POWER DISTRIBUTION UNIT IN REAR OF CABINET.

GRAPHIC SCALE(S)

PLAN NORTH

0 2' 4' 8' 12'
SCALE: 1/4" = 1'-0"

REGISTERED COMMUNICATIONS DISTRIBUTION DESIGNER
Bicsi
David Robinson
BICSI ID #185303
08 MAY 26
RCDD

MARK	DESCRIPTION	DATE

DESIGNED BY: S. SELF
DRAWN BY: C. TINKER
CHECKED BY: J. HIMES
SUBMITTED BY: J. PEARSON
SIZE: ANSI D
ISSUE DATE: MAY 2026
ANG PROJECT NO.: PBXP222050
CONTRACT NO.: FA8903-21-D-0008
TASK ORDER NO.: W50S8R23F0009

OHIO AIR NATIONAL GUARD
MANSFIELD LAHM AIR NATIONAL GUARD BASE, OH

JACOBS GOVERNMENT SERVICES
2600 MICHELSON SR, STE 500
IRVINE, CA 92612

MANSFIELD LAHM AIR NATIONAL GUARD BASE, OH
REPAIR B403 FOR CYBER
FA877006
TELECOMMUNICATION ENLARGED PLANS

SHEET ID
T-403

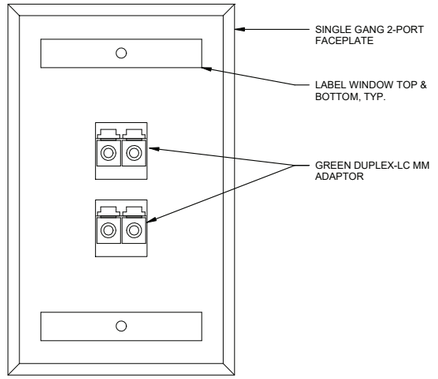

F1 U/OUTLET (2) GREEN 2-STRAND MMF DETAIL
SCALE NTS

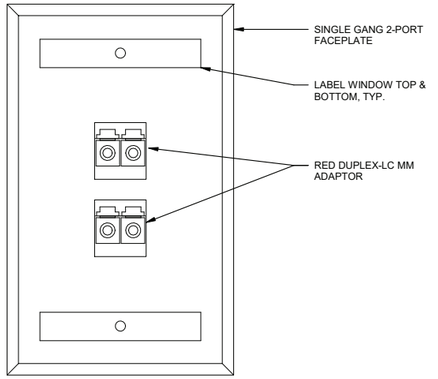

F4 R/OUTLET (2) RED 2-STRAND MMF DETAIL
SCALE NTS

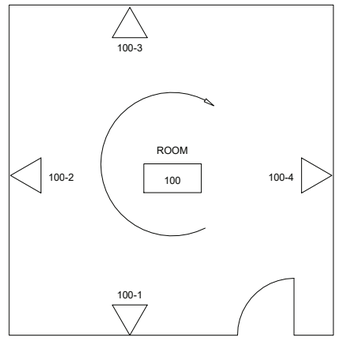

NOTE:
NUMBER OUTLETS CLOCKWISE STARTING AT DOOR OR AS INDICATED ON DRAWINGS.

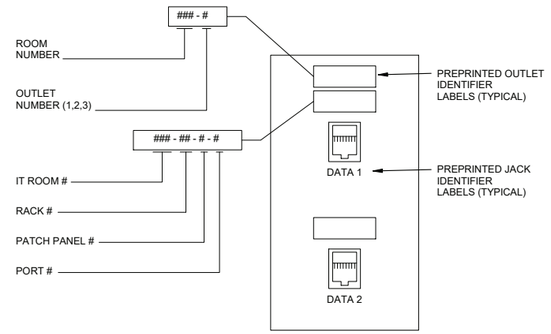

F6 OUTLET LABELING
SCALE NTS

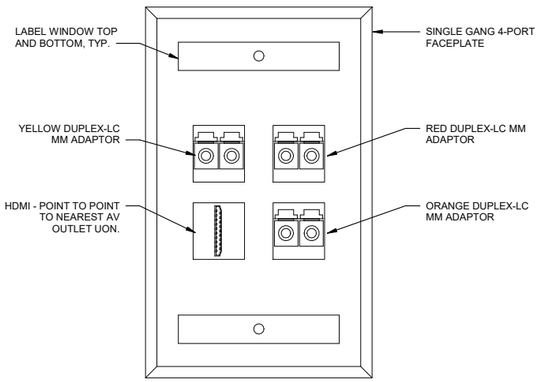

C1 R/OUTLET AV DETAIL
SCALE NTS

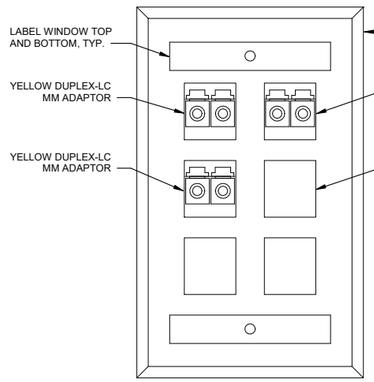

C4 R/OUTLET TYPE A DETAIL
SCALE NTS

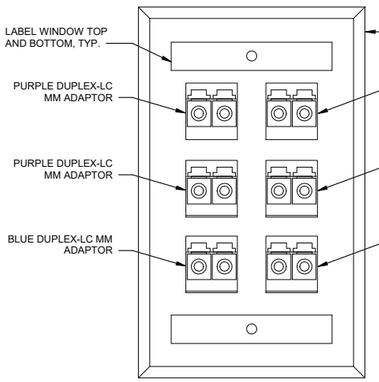

C7 R/OUTLET TYPE B DETAIL
SCALE NTS

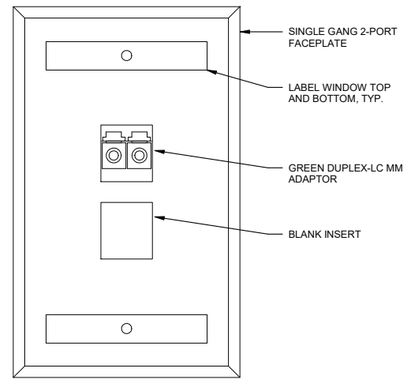

C9 U/EQUIPMENT OUTLET (1) GREEN 2-STRAND MMF DETAIL
SCALE NTS

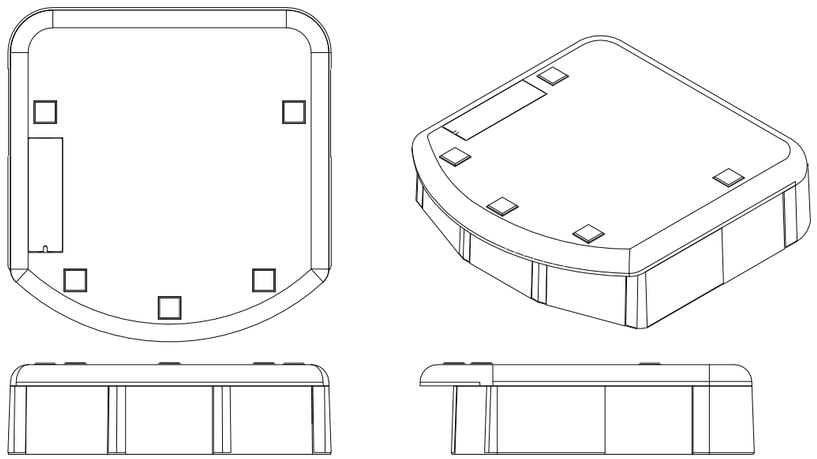

A1 UNDERFLOOR MOUNTED OUTLET BOX
SCALE NTS

REGISTERED COMMUNICATIONS DISTRIBUTION DESIGNER
Bicsi
David Robinson
BICSI ID # 185303
08 MAY 26
RCDD

MARK	DESCRIPTION	DATE

DESIGNED BY: S. SELF
DRAWN BY: C. TINKER
CHECKED BY: J. HIMES
SUBMITTED BY: J. PEARSON
SIZE: ANSI D
ISSUE DATE: MAY 2026
AMG PROJECT NO.: PBXP222050
CONTRACT NO.: FA8803-21-D-0008
TASK ORDER NO.: W50S8R23F0009

OHIO AIR NATIONAL GUARD
MANSFIELD LAHM AIR NATIONAL GUARD BASE, OH

JACOBS GOVERNMENT SERVICES
2600 MICHELSON SR. STE 500
IRVINE, CA 92812

MANSFIELD LAHM AIR NATIONAL GUARD BASE, OH
REPAIR B403 FOR CYBER
FA877006
DETAILS
TELECOMMUNICATION

SHEET ID
T-501

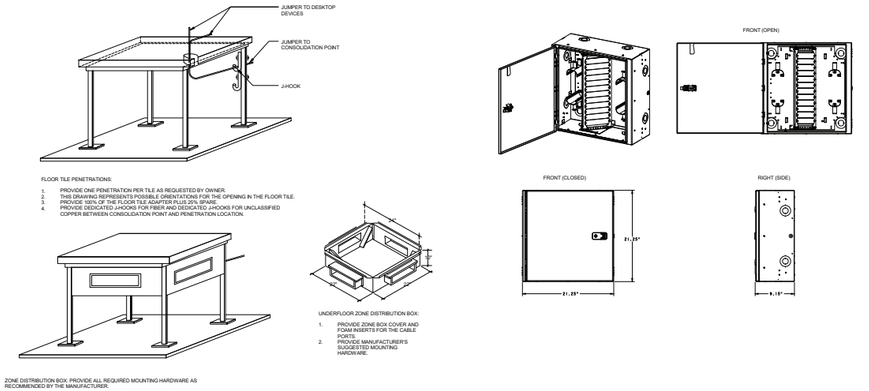

F1 UNDERFLOOR ZONE BOX DETAIL

SCALE NTS

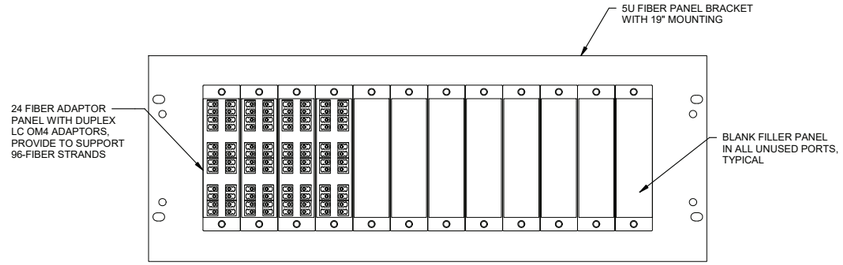

F6 ZONE BOX FIBER DISTRIBUTION PANEL

SCALE NTS

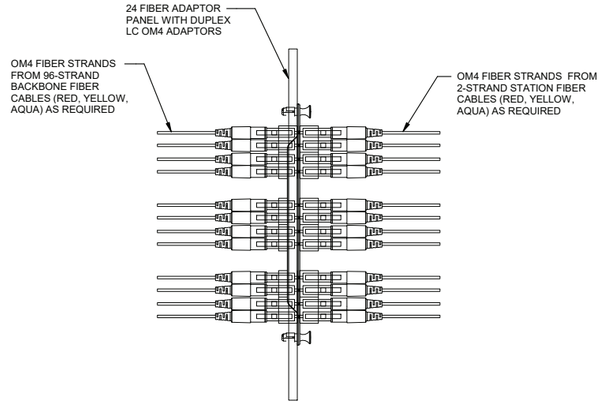

D1 FIBER ADAPTER PANEL CONNECTION DETAIL

SCALE NTS

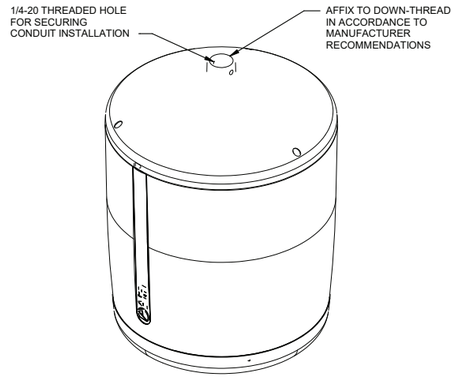

D6 SPEAKER DETAIL

SCALE NTS

MARK	DESCRIPTION	DATE

DESIGNED BY: S. SELF	ISSUE DATE: MAY 2026
DRAWN BY: C. TINKER	ANG PROJECT NO.: PBXP222050
CHECKED BY: J. HIMES	CONTRACT NO.: FA8903-21-D-0008
SUBMITTED BY: D. PEARSON	TASK ORDER NO.: W50S8R23F0009
SIZE: ANSI D	

OHIO AIR NATIONAL GUARD
MANSFIELD LAHM AIR NATIONAL GUARD BASE, OH

JACOBS GOVERNMENT SERVICES
2600 MICHELSON SR, STE 500
IRVINE, CA 92612

MANSFIELD LAHM AIR NATIONAL GUARD BASE, OH
REPAIR B403 FOR CYBER
FA877006
DETAILS
TELECOMMUNICATION

SHEET ID

T-502

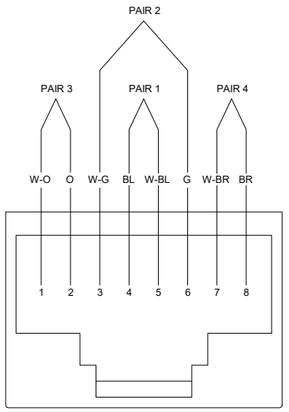

T 568B WIRE LEGEND	
PIN NO.	WIRE COLOR
1	WHITE/ORANGE
2	ORANGE
3	WHITE/GREEN
4	BLUE
5	WHITE/BLUE
6	GREEN
7	WHITE/BROWN
8	BROWN

F1 8 PIN MODULAR RJ45 CONNECTOR AND JACK WIRING PER ANSI/TIA/568B

SCALE NTS

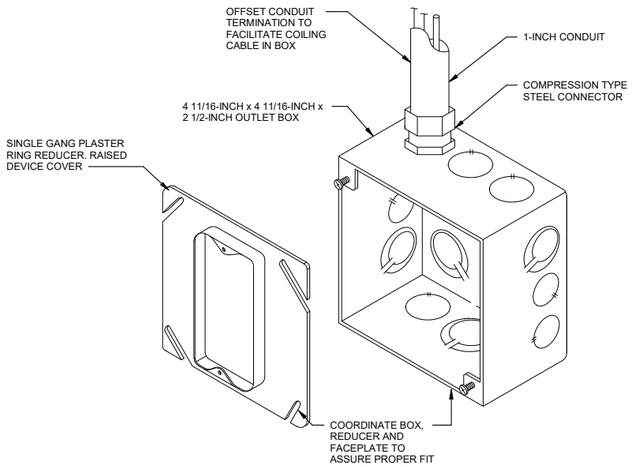

E1 WALL MOUNTED OUTLET BOX DETAIL

SCALE NTS

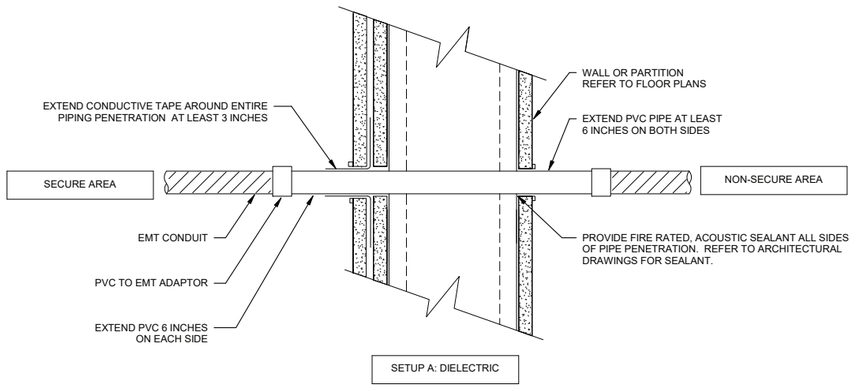

A1 SECURE TO NON-SECURE BOUNDARY CONDUIT PIPE PENETRATION

SCALE NTS

NOTE: CONTRACTOR MAY SELECT EITHER SETUP A OR SETUP B. REFER TO ARCHITECTURAL PLANS FOR PERIMETERS.

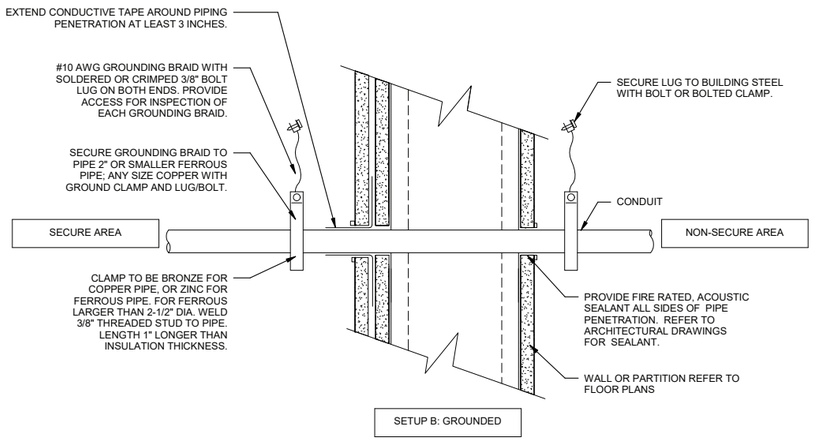

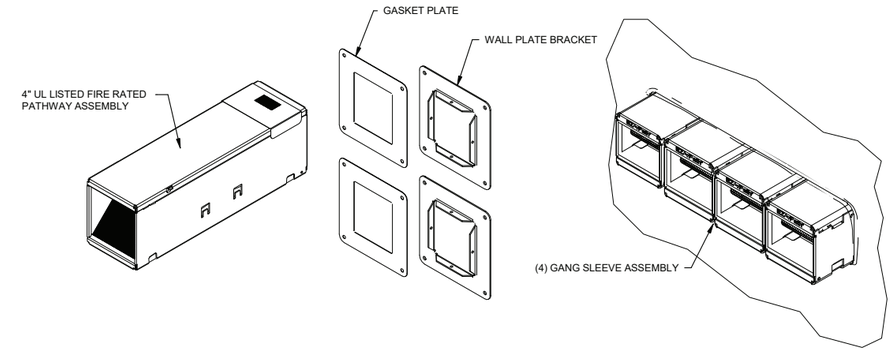

F6 FIRE RATED CABLE SLEEVE ASSEMBLY DETAIL

SCALE NTS

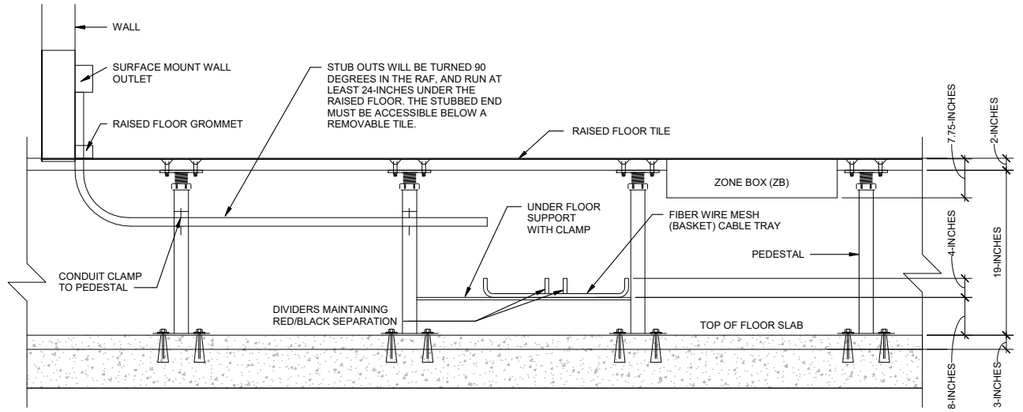

D6 BELOW FLOOR CABLE TRAY AND CONDUIT DETAIL

SCALE NTS

REGISTERED COMMUNICATIONS DISTRIBUTION DESIGNER
Bicsi
David Robinson
BICSI ID # 185303
08 MAY 2026
RCDD

MARK	DESCRIPTION	DATE

ISSUE DATE: MAY 2026
ANG PROJECT NO.: PBXP222050
CONTRACT NO.: FA8803-21-D-0008
TASK ORDER NO.: W50S8R23F0009

DESIGNED BY: S. SELF
DRAWN BY: C. TINKER
CHECKED BY: J. HIMES
SUBMITTED BY: D. PEARSON
SIZE: ANSI D

OHIO AIR NATIONAL GUARD
MANSFIELD LAHM AIR NATIONAL GUARD BASE, OH

JACOBS GOVERNMENT SERVICES
2600 MICHELSON SR, STE 500
IRVINE, CA 92612

MANSFIELD LAHM AIR NATIONAL GUARD BASE, OH
REPAIR B403 FOR CYBER
FA877006
DETAILS
TELECOMMUNICATION

SHEET ID

T-503

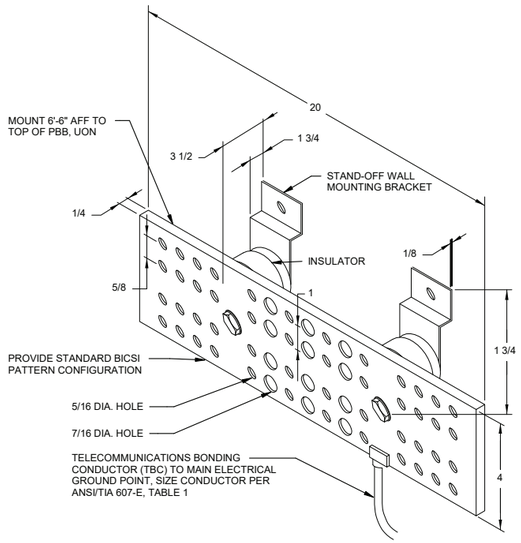

E1 PRIMARY BONDING BUSBAR (PBB) DETAIL

SCALE NTS

C1 SECONDARY BONDING BUSBAR (SBB) DETAIL

SCALE NTS

A1 RACK BONDING BUSBAR (RBB) DETAIL

SCALE NTS

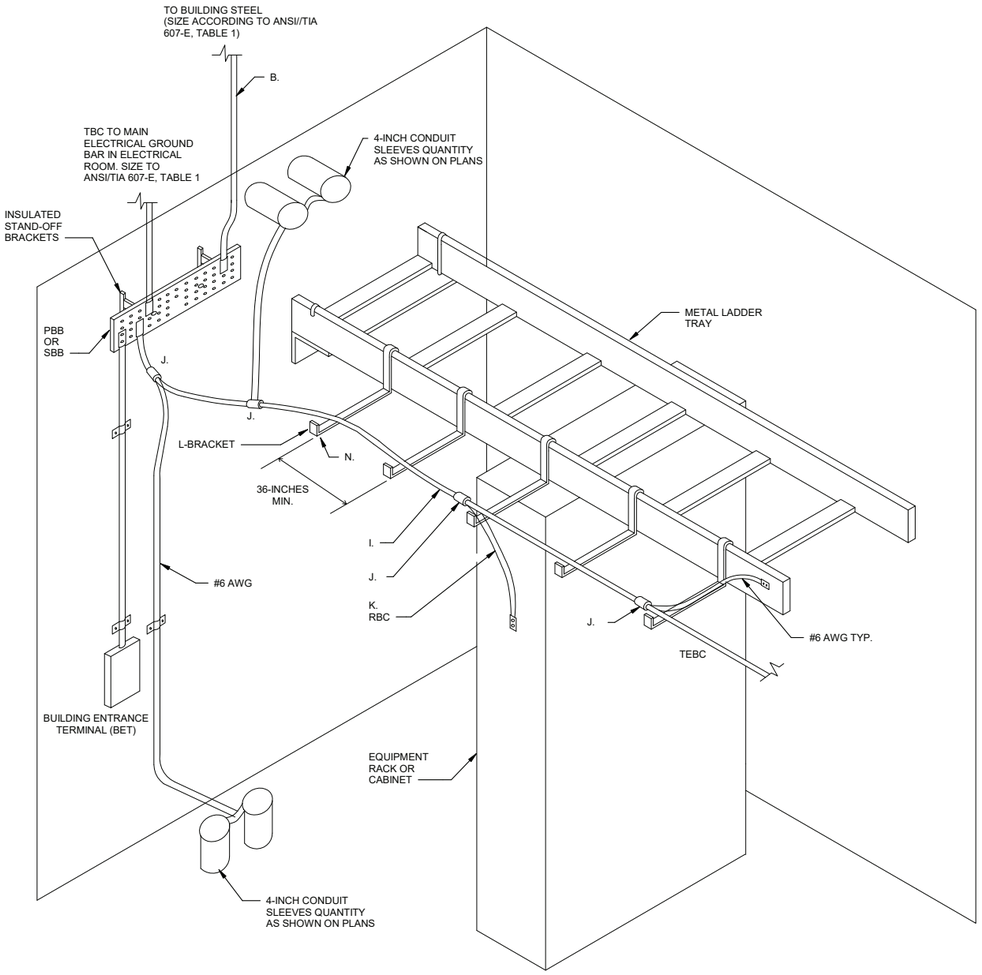

A5 GROUNDING AND BONDING INSTALLATION DETAIL

SCALE NTS

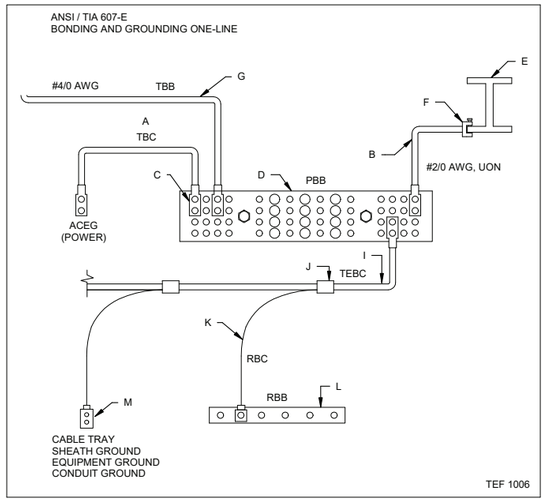

GENERAL NOTES:

1. COMPLY WITH ANSI / TIA-607-E-1 6.2.1 FOR PBB'S.
2. COMPLY WITH ANSI / TIA-607-E-1 6.2.2 FOR SBB'S.
3. COMPLY WITH ANSI / TIA-607-E-1 6.2.3 FOR RBB'S.
4. SIZE TBB / BBC CONDUCTORS TO ANSI / TIA-607-E, TABLE 1, CONDUCTORS MUST BE THE SAME SIZE WHEN CONNECTED.
5. BONDING CONNECTIONS ARE EITHER LISTED EXOTHERMIC WELDS, LISTED IRREVERSIBLE COMPRESSION CONNECTORS, OR LISTED MECHANICAL CONNECTORS. CONNECTORS, LUGS, AND COMPONENTS MUST BE LISTED FOR THE PURPOSE.
6. UTILIZE EXOTHERMIC WELDING OR LISTED TWO-HOLE COMPRESSION LUGS FOR CONNECTIONS TO THE PBB/SBB. LABEL ALL PBB/SBB MAIN CONNECTIONS: "IF THIS CONNECTOR OR CABLE IS LOOSE OR REMOVED, CALL THE BUILDING TELECOMMUNICATIONS MANAGER.

KEYED NOTES

A. IF PANELBOARD IS LOCATED IN SAME ROOM, BOND PBB/SBB TO THE CLOSEST AC ELECTRICAL PANEL'S GROUND. THE TBC MUST BE, AS A MINIMUM, THE SAME SIZE AS LARGEST TBB TO WHICH IT IS CONNECTED.

B. THIS CONDUCTOR MUST BE IN A CONTINUOUS STRAIGHT-LINE PATH AND AS SHORT AS POSSIBLE. THE CONTRACTOR HAS THE OPTION TO USE VERIFIABLE ELECTRICALLY CONTINUOUS STRUCTURAL METAL (TWO-POINT TEST) AS A REPLACEMENT FOR THIS CONDUCTOR. STRUCTURAL METAL MUST NOT BE CONCRETE ENCASED OR REBAR.

C. UTILIZE EXOTHERMIC WELDING OR LISTED TWO-HOLE COMPRESSION LUGS FOR CONNECTIONS TO THE PBB/SBB.

D. PBB OR SBB, SEE GENERAL NOTES ABOVE FOR REQUIREMENTS.

E. BUILDING STEEL (STRUCTURAL METAL) VERIFIED ELECTRONICALLY CONTINUOUS VIA TWO-POINT TEST OR EQUIPMENT. STRUCTURAL METAL MUST NOT BE CONCRETE REINFORCING STEEL.

F. LISTED BONDING CONNECTOR. LISTED EXOTHERMIC, COMPRESSION, OR MECHANICAL CONNECTION.

G. WHEN STRUCTURAL METAL IS BONDED TO BUILDING'S GROUNDING ELECTRODE SYSTEM , IT MAY BE USED IN PLACE OF A TBB IF VERIFIED ELECTRICALLY CONTINUOUS. IF USING STRUCTURAL METAL TO REPLACE THE TBB, PROVIDE TWO-POINT GROUND/CONTINUITY TEST IN ACCORDANCE WITH ANSI/TIA-607-E.

I. SIZE TEBC AND ALL CONDUCTORS PER ANSI TIA-607-E TABLE 1.

J. USE IRREVERSIBLE COMPRESSION CONNECTORS TO BOND TEBC TO RBC'S OR OTHER GROUNDING CONDUCTORS.

K. USE #6 AWG AS A MINIMUM RACK BONDING CONDUCTOR SIZE, UNLESS OTHERWISE NOTED.

L. WHEN USING RBBS, SEE GENERAL NOTES ABOVE FOR REQUIREMENTS.

M. BOND EQUIPMENT TO TEBC VIA IRREVERSIBLE COMPRESSION CONNECTORS AND #6 AWG.

N. STAND-OFF BRACKET TO MAINTAIN SEPARATION (MINIMUM 2-INCHES) FROM OTHER CABLE. SPACE BRACKETS NO GREATER THAN 36-INCHES CENTER TO CENTER ASSUMING CABLE TRAY WILL BE FULL IN A 25-YEAR LIFE-CYCLE.

TABLE 1 - TBB/BBC CONDUCTOR SIZE VS LENGTH

TBB/BBC LINEAR LENGTH m (ft)	CONDUCTOR SIZE (AWG)
LESS THAN 4 (13)	6
4 - 6 (14 - 20)	4
6 - 8 (21 - 26)	3
8 - 10 (27 - 33)	2
10 - 13 (34 - 41)	1
13 - 16 (42 - 52)	1/0
16 - 20 (53 - 66)	2/0
20 - 26 (67 - 84)	3/0
26 - 32 (85 - 105)	4/0
32 - 38 (106 - 125)	250 KCMIL
38 - 46 (126 - 150)	300 KCMIL
46 - 53 (151 - 175)	350 KCMIL
53 - 76 (176 - 250)	500 KCMIL
76 - 91 (251 - 300)	600 KCMIL
GREATER THAN 91 (301)	750 KCMIL

REGISTERED COMMUNICATIONS DISTRIBUTION DESIGNER
Bicsi
David Robinson
BICSI ID #185303
08 MAY 26
RCDD

MARK	DESCRIPTION	DATE

ISSUE DATE: MAY 2026
ANG PROJECT NO.: PBXP222050
CONTRACT NO.: FA8903-21-D-0008
TASK ORDER NO.: W50S8R23F0009

DESIGNED BY: S. SELF
DRAWN BY: C. TINKER
CHECKED BY: J. HIMES
SUBMITTED BY: D. PETERSON
SIZE: ANSI D

OHIO AIR NATIONAL GUARD
MANSFIELD LAHM AIR NATIONAL GUARD BASE, OH

JACOBS GOVERNMENT SERVICES
2600 MICHELSON SR, STE 500
IRVINE, CA 92612

MANSFIELD LAHM AIR NATIONAL GUARD BASE, OH
REPAIR B403 FOR CYBER
FA877006
DETAILS
TELECOMMUNICATION

SHEET ID
T-504

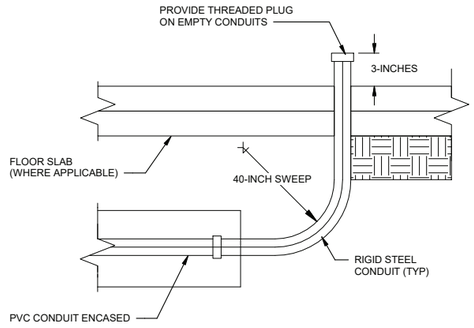

F1 DUCT BANK STUB-UP DETAIL

SCALE NTS

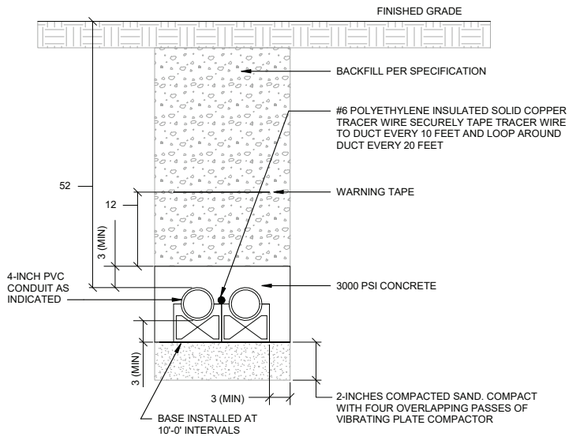

D1 2-WAY CONCRETE ENCASED DUCTBANK SECTION

SCALE NTS

ALL DIMENSIONS ARE IN INCHES,
UNLESS OTHERWISE NOTED.

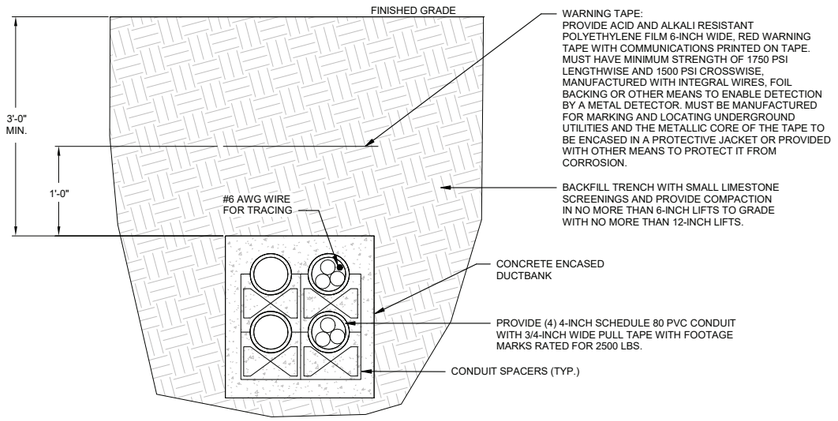

DUCTBANK TRENCHING DETAIL

A1 4-WAY REINFORCED DUCTBANK

SCALE NTS

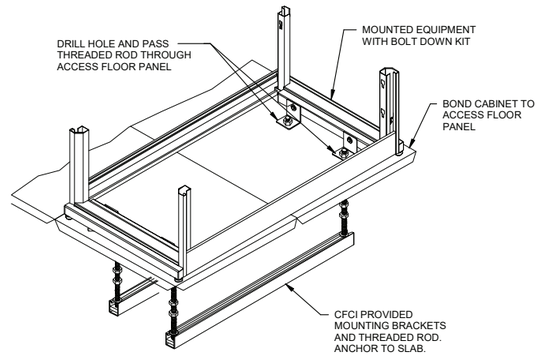

E4 CABINET ANCHOR DETAIL

SCALE NTS

PARTS LIST
4 FLOOR ANCHORS
4 M 8 BOLTS
4 M 8 WASHERS

INSTALLATION NOTES
CABINETS, WHETHER STANDALONE OR BAYED, MUST BE ANCHORED TO THE FLOOR. ANCHOR THE CABINET TO ACCESS FLOOR AND SLAB INSTALLATIONS, WITH CABINET LEVELED AND CASTERS IN PLACE.

ASSEMBLY SEQUENCE

A. ENSURE THAT THE CABINET IS LEVEL. ADJUST IF NECESSARY USING THE 4 LEVELED NUTS LOCATED IN THE LOWER CORNERS OF THE FRAME.
B. INSTALL THE FLOOR ANCHOR BRACKETS TO CABINET FRAME AS SHOWN IN FIGURES USING THE M8 BOLTS AND NUTS PROVIDED. THE FOAM PAD ON THE BRACKET SHOULD BE ADJACENT TO THE FRAME.
C. ATTACH THE ANCHORS TO THE FLOOR WITH APPROPRIATE HARDWARE FOR THE TYPE OF FLOOR (USER PROVIDED).

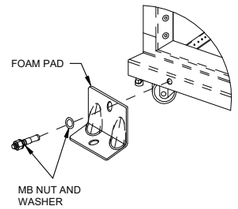

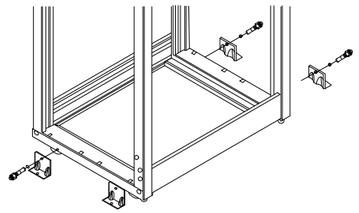

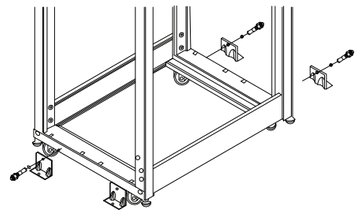

E7 CABINET MOUNTING DETAIL

SCALE NTS

REGISTERED COMMUNICATIONS DISTRIBUTION DESIGNER
Bicsi
David Robinson
BICSI ID # 185303
08 MAY 26
RCDD

MARK	DESCRIPTION	DATE

DESIGNED BY: S. SELF
DRAWN BY: C. TINKER
CHECKED BY: J. HIMES
SUBMITTED BY: D. PEARSON
SIZE: ANSI D
ISSUE DATE: MAY 2026
ANG PROJECT NO.: PBXP222050
CONTRACT NO.: FA8803-21-D-0008
TASK ORDER NO.: W50S8R23F0009

OHIO AIR NATIONAL GUARD
MANSFIELD LAHM AIR NATIONAL GUARD BASE, OH

JACOBS GOVERNMENT SERVICES
2600 MICHELSON SR, STE 500
IRVINE, CA 92612

MANSFIELD LAHM AIR NATIONAL GUARD BASE, OH
REPAIR B403 FOR CYBER
FA877006
DETAILS
TELECOMMUNICATION

SHEET ID

T-505

TYPE B-3 FINAL

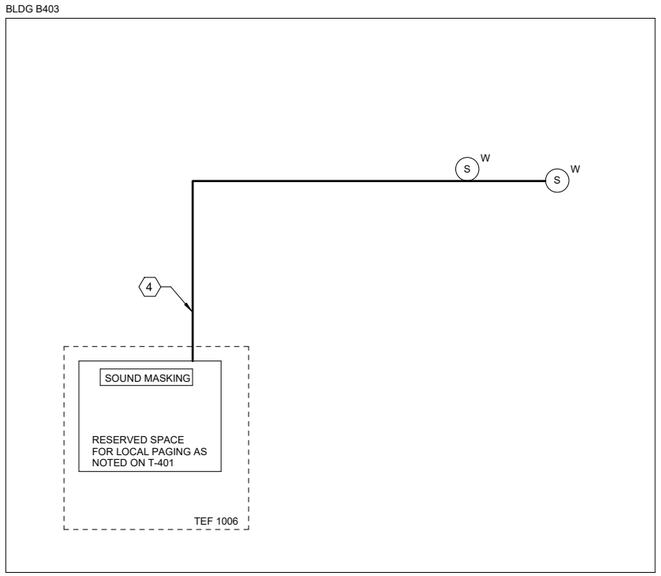

E1 SINGLE LINE DIAGRAM - SOUND MASKING
SCALE NTS

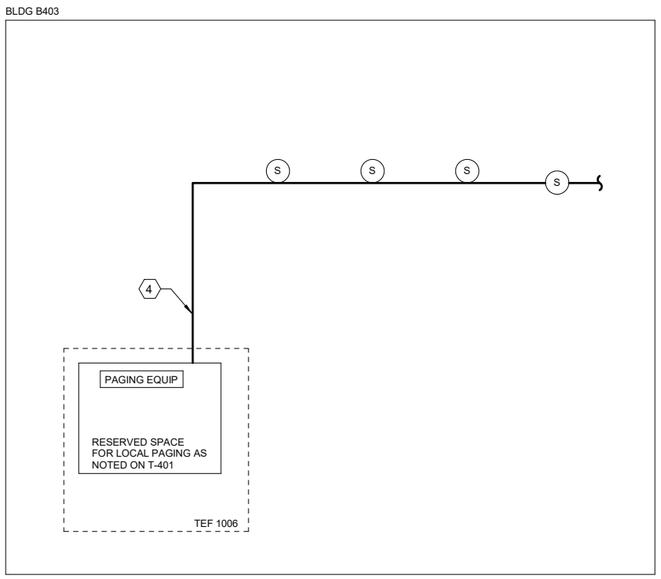

A1 SINGLE LINE DIAGRAM - OVERHEAD PAGING
SCALE NTS

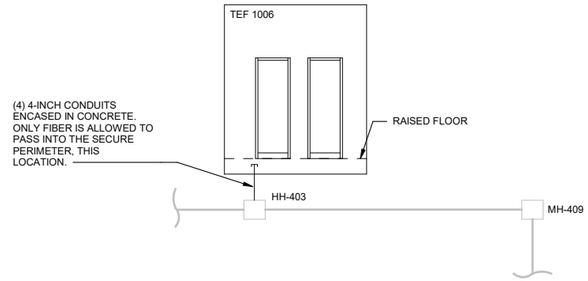

G6 SINGLE LINE DIAGRAM - CONDUIT
SCALE NTS

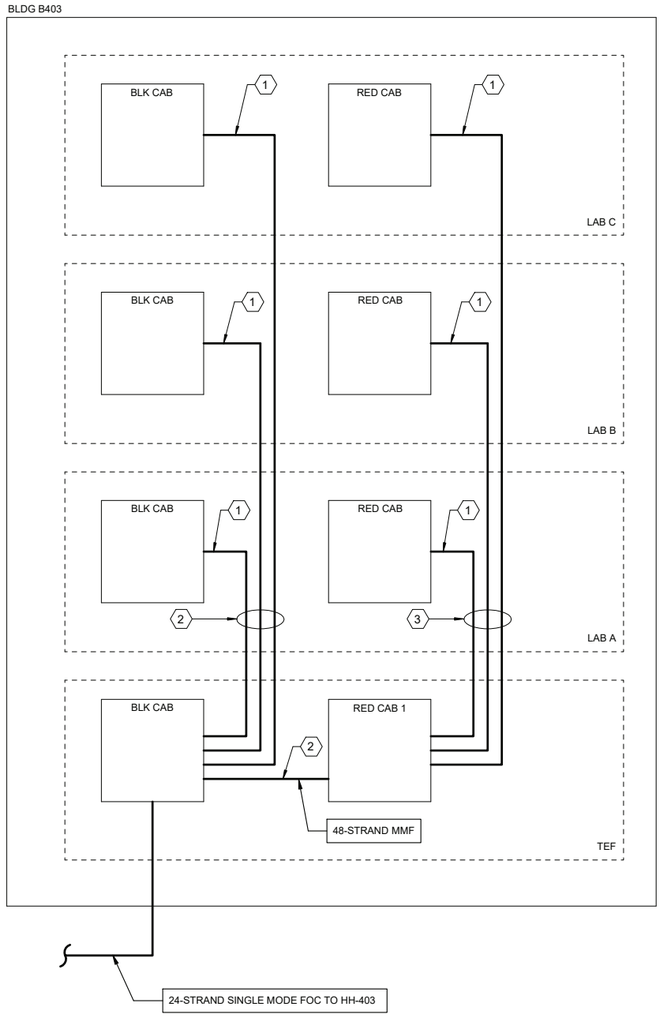

A6 SINGLE LINE DIAGRAM - FIBER OPTIC BACKBONE
SCALE NTS

GENERAL SHEET NOTES

A. THIS SHEET CONTAINS DIAGRAMMATIC REPRESENTATION OF BACKBONE CABLING.

#SHEET KEYNOTES

1. 24-STRAND MULTIMODE FIBER
2. ROUTE BLACK CABLE IN CABLE TRAY AND MAINTAIN SEPARATION FROM RED CABLE AND EQUIPMENT
3. ROUTE RED CABLE IN CABLE TRAY AND MAINTAIN SEPARATION FROM BLACK CABLE AND EQUIPMENT
4. ROUTE CABLE IN CONDUIT OVERHEAD.

REGISTERED COMMUNICATIONS DISTRIBUTION DESIGNER
Bicsi
David Robinson
BICSI ID # 185303
08 MAY 26
RCDD

MARK	DESCRIPTION	DATE

ISSUE DATE:	MAY 2026
ANG PROJECT NO.:	PBXP222050
CONTRACT NO.:	FA8803-21-D-0008
TASK ORDER NO.:	W50S8R23F0009

DESIGNED BY:	S. SELF
DRAWN BY:	C. TINKER
CHECKED BY:	J. HIMES
SUBMITTED BY:	D. PEARSON
QTY:	
ANSI D	

OHIO AIR NATIONAL GUARD
MANSFIELD LAHM AIR NATIONAL GUARD BASE, OH

JACOBS GOVERNMENT SERVICES
2600 MICHELSON SR, STE 500
IRVINE, CA 92612

MANSFIELD LAHM AIR NATIONAL GUARD BASE, OH
REPAIR B403 FOR CYBER
FA877006
TELECOMMUNICATION SINGLE LINE DIAGRAMS

SHEET ID
T-601

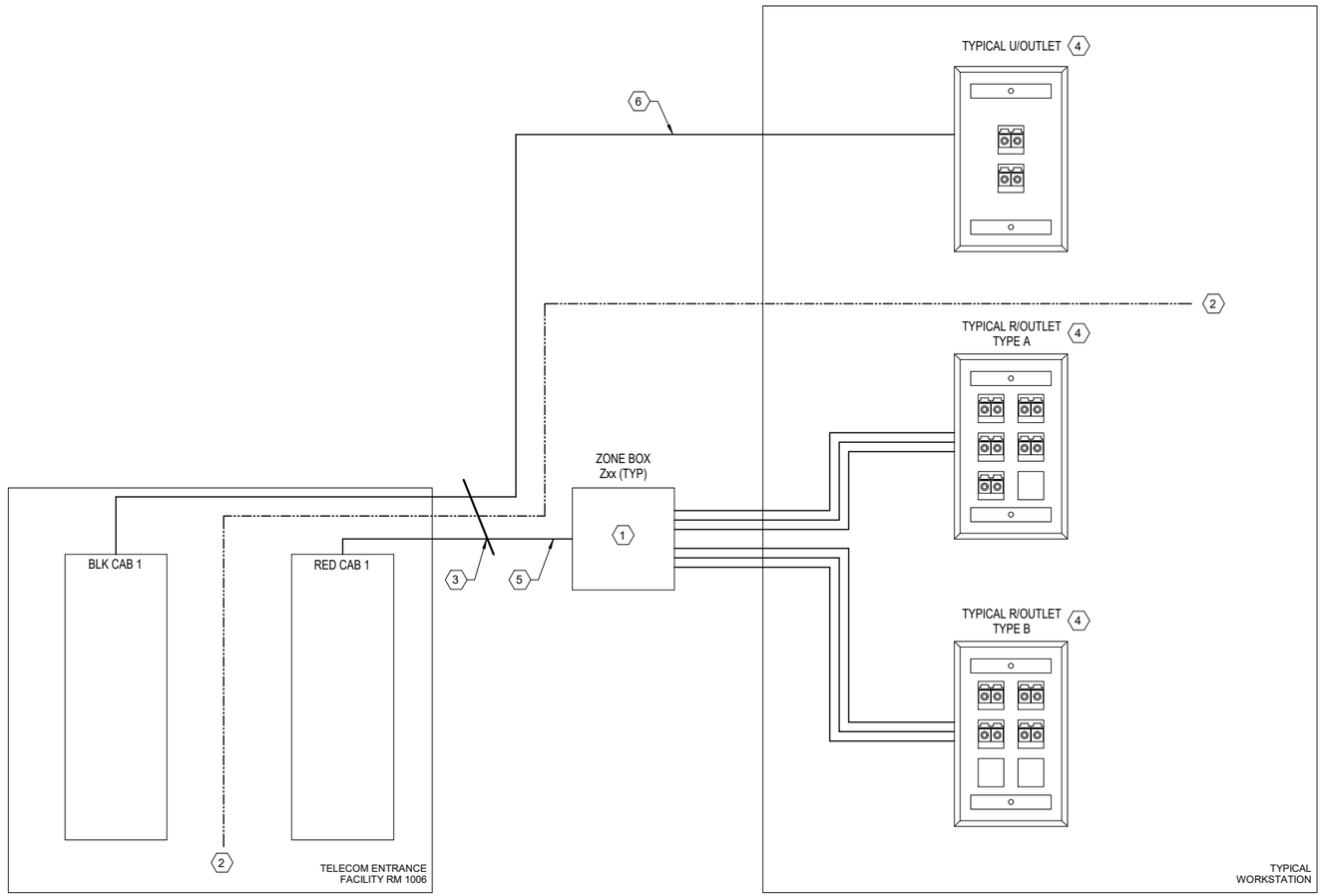

A1 SINGLE LINE DIAGRAM - TYPICAL HORIZONTAL FIBER OPTICS
SCALE NTS

GENERAL SHEET NOTES

A. THIS SHEET CONTAINS DIAGRAMMATIC REPRESENTATION OF BACKBONE CABLING.

B. FLOOR PLANS CONTAIN OUTLET LOCATION DETAIL SEE SHEETS T-101 AND T-401 THROUGH T-403.

(#) SHEET KEYNOTES

1. UNDERFLOOR ZONE BOX CONSOLIDATION POINT WITH 5RU OF SPACE FOR FIBER PATCH PANELS.
2. MAINTAIN RED/BLACK SEPARATION AT ALL TIMES IN ACCORDANCE WITH TEMPEST 1-13.
3. SHARED CABLE TRAY - MAINTAIN RED/BLACK SEPARATION AT ALL TIMES.
4. SEE DETAIL SHEET FOR OUTLET / FIBER COLOR SCHEME
5. BUNDLED FIBER CABLING VARIES PER ZONE BOX.
6. GREEN FIBER BACK TO BLACK CABINET.

REGISTERED COMMUNICATIONS DISTRIBUTION DESIGNER
Bicsi
David Robinson
BICSI ID # 185303
08 MAY 26
RCDD

MARK	DESCRIPTION	DATE

DESIGNED BY: S. SELF	ISSUE DATE: MAY 2026
DRAWN BY: C. TINKER	ANG PROJECT NO.: PBXP222050
CHECKED BY: J. HIMES	CONTRACT NO.: FA8903-21-D-0008
SUBMITTED BY: D. PEARSON	TASK ORDER NO.: W50S8R23F0009
SIZE: ANSI D	

OHIO AIR NATIONAL GUARD
MANSFIELD LAHM AIR NATIONAL GUARD BASE, OH

JACOBS GOVERNMENT SERVICES
2600 MICHELSON SR, STE 500
IRVINE, CA 92812

MANSFIELD LAHM AIR NATIONAL GUARD BASE, OH
REPAIR B403 FOR CYBER
FA877006
TELECOMMUNICATION SCHEDULES

SHEET ID
T-602

SECURITY GENERAL NOTES

A. ALL SYMBOLS, ABBREVIATIONS AND GENERAL NOTES SHOWN ARE NOT NECESSARILY USED ON THIS PROJECT.

B. MOUNTING HEIGHTS FOR CEILING MOUNTED DEVICES ARE TO THE BOTTOM OF THE DEVICE, UNLESS OTHERWISE NOTED.

C. MOUNTING HEIGHTS ABOVE FINISHED FLOOR, TO CENTERLINE OF DEVICE, ARE AS FOLLOWS, UNLESS OTHERWISE NOTED:

CARD READERS	42-INCHES
INTERIOR CAMERAS	CEILING
EXTERIOR CAMERAS	PARAPET

D. UNLESS OTHERWISE NOTED ALL WORK SHOWN IS NEW AND MUST BE PROVIDED BY THE CONTRACTOR.

E. CARD READER SYMBOL INDICATES A COMPLETE WORKING ACS SYSTEM IN ACCORDANCE WITH SPECIFICATIONS AND DETAILS HEREIN. PROVIDE ALL PARTS REQUIRED INCLUDING BUT NOT LIMITED TO POWER TRANSFER HINGE, HIGH SECURITY DOOR POSITION SWITCH, DOOR HARDWARE, CONDUIT PATH, ETC.

E. COORDINATE LOCATION OF SECURITY DEVICES WITH SECURITY MANAGER.

F. ALL CABLING TO BE PROVIDED IN DEDICATED 1" CONDUITS, UNLESS NOTED OTHERWISE. NO J-HOOKS OR SIMILAR PRODUCT ALLOWED UNLESS AUTHORIZED BY SITE SECURITY MANAGER.

G. DATA CABLE AND OUTLET TYPE FURNISHED AND INSTALLED BY TELECOM CONTRACTOR.

H. ALL CAMERAS INSTALLED BY SECURITY CONTRACTOR.

I. ALL DOOR POSITION SWITCHES MUST BE HIGH SECURITY UL.

SECURITY ABBREVIATIONS

A	----------
AACS	AUTOMATED ACCESS CONTROL SYSTEM
ABV	ABOVE
ACS	ACCESS CONTROL SYSTEM
AFF	ABOVE FINISHED FLOOR
AFG	ABOVE FINISHED GRADE
B	----------
BFC	BELOW FINISHED CEILING
BLDG	BUILDING
BLW	BELOW
BT	BASKET TRAY
C	----------
CAB	CABINET
CAP	CAPACITY
CLG	CEILING
D	----------
DTL	DETAIL
DWG	DRAWING
E	----------
EA	EACH
EF	ENTRANCE FACILITY
EL, ELEV	ELEVATION
ER	EQUIPMENT ROOM
ESS	ELECTRONIC SECURITY SYSTEM
F	----------
FA	FIRE ALARM
FDU	FIBER OPTIC DISTRIBUTION UNIT
FO	FIBER OPTIC
FOC	FIBER OPTIC CABLE
H	----------
HH	HANDHOLE
IDS	INTRUSION DETECTION SYSTEM
M	----------
MISC	MISCELLANEOUS
MT, MTD	MOUNT, MOUNTED
N	----------
NA, N/A	NOT APPLICABLE
NEC	NATIONAL ELECTRICAL CODE
NESC	NATIONAL ELECTRICAL SAFETY CODE
NIPRNET	NON-CLASSIFIED INTERNET PROTOCOL ROUTER NETWORK
NTS	NOT TO SCALE
O	----------
OC	ON CENTER
OSP	OUTSIDE PLANT
P	----------
PET	PROTECTION ENTRANCE TERMINAL
PNL	PANEL
Q	----------
QTY, #	QUANTITY
S	----------
SC	TYPE OF FIBER OPTIC CONNECTOR
SCP	SECURITY CONTROL PANEL
SM	SINGLEMODE
ST	STRAND
T	----------
TB	TERMINAL BLOCK
TYP	TYPICAL
V	----------
VSS	VIDEO SURVEILLANCE SYSTEMS
W	----------
W/O	WITHOUT
WAO	WORK AREA OUTLET
WAP	WIRELESS ACCESS POINT

SECURITY SYMBOLS

NOTE: NOT ALL OF THE SYMBOLS LISTED HERE APPEAR ON THESE CONTRACT DRAWINGS

GENERAL:

- INDICATES SECTION NUMBER
- INDICATES DRAWING ON WHICH SECTION APPEARS
- AREA SERVED

VIDEO SURVEILLANCE:

- INTERIOR DOME CAMERA - CEILING MOUNT
- PARAPET MOUNTED EXTERIOR MULTI-SENSOR CAMERA

ACCESS CONTROL SYSTEM:

- CR — CARD READER
- CK — CARD READER WITH KEYPAD (LEVEL II)
- ACS — ACCESS CONTROL PANEL
- DS — DOOR MONITOR SWITCH
- SECURITY ALARM HORN

INTRUSION DETECTION SYSTEM:

- IDS — INTRUSION DETECTION SYSTEM HEAD END
- KP — KEYPAD

REGISTERED COMMUNICATIONS DISTRIBUTION DESIGNER
Bicsi
David Robinson
BICSI ID #185303
08 MAY 26
RCDD

MARK	DESCRIPTION	DATE

DESIGNED BY: S. SELF
DRAWN BY: C. TINKER
CHECKED BY: J. HIMES
SUBMITTED BY: D. PEARSON
SIZE: ANSI D
ISSUE DATE: MAY 2026
ANG PROJECT NO.: PBXP222050
CONTRACT NO.: FA8903-21-D-0008
TASK ORDER NO.: W50S8R23F0009

OHIO AIR NATIONAL GUARD
MANSFIELD LAHM AIR NATIONAL GUARD BASE, OH

JACOBS GOVERNMENT SERVICES
2600 MICHELSON SR, STE 500
IRVINE, CA 92612

MANSFIELD LAHM AIR NATIONAL GUARD BASE, OH
REPAIR B403 FOR CYBER
FA877006
SECURITY LEGEND AND GENERAL NOTES

SHEET ID
TY001

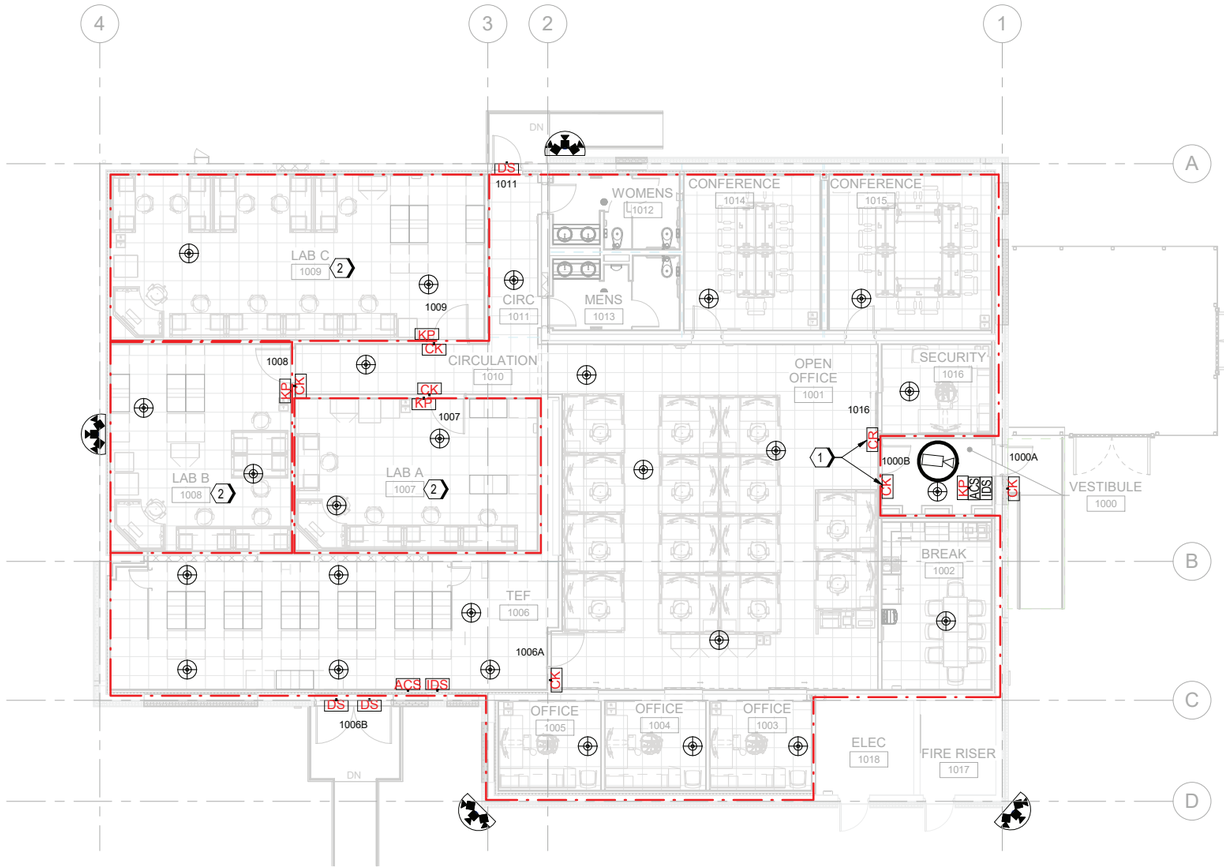

A1 GROUND FLOOR SECURITY PLAN

SCALE 1/8" = 1'-0"

GENERAL SHEET NOTES

A. REFER TO SHEET TY001 FOR TELECOMMUNICATIONS GENERAL NOTES, ABBREVIATION AND LEGEND.

B. REFER TO SHEETS TY601 FOR TELECOMMUNICATIONS ONE-LINE DIAGRAMS.

C. INSTALL ALL CABLING IN CONDUIT OVERHEAD.

D. COORDINATE ALL WORK WITH APPROPRIATE TRADES.

E. THE CONTRACTOR MUST ADHERE TO THE BASE STANDARDS FOR THE LABELING TO BE USED FOR THE CONSTRUCTION OF THIS PROJECT IN ACCORDANCE WITH TIA-606

#SHEET KEYNOTES

1. SURFACE MOUNT DEVICE AT THIS LOCATION.
2. PROVIDE SEPARATED ZONED IDS FOR LOCAL CONTROL.

LEGEND

IDS ZONE BOUNDARY

12-INCH HIGH RAISED ACCESS FLOORING

GRAPHIC SCALE(S)

0 4' 8' 16' 24'

SCALE: 1/8" = 1'-0"

PLAN NORTH

REGISTERED COMMUNICATIONS DISTRIBUTION DESIGNER
BICSI
David Robinson
BICSI ID # 185303
08 MAY 26
RCDD

MARK	DESCRIPTION	DATE

DESIGNED BY: S. SELF
DRAWN BY: C. TINKER
CHECKED BY: J. HIMES
SUBMITTED BY: S. PEARSON
SIZE: ANSI D
ISSUE DATE: MAY 2026
ANG PROJECT NO.: PBXP222050
CONTRACT NO.: FA8803-21-D-0008
TASK ORDER NO.: W50SBR23F0009

OHIO AIR NATIONAL GUARD
MANSFIELD LAHM AIR NATIONAL GUARD BASE, OH

JACOBS GOVERNMENT SERVICES
2600 MICHELSON SR, STE 500
IRVINE, CA 92812

MANSFIELD LAHM AIR NATIONAL GUARD BASE, OH
REPAIR B403 FOR CYBER
FA877006
SECURITY FLOOR PLAN

SHEET ID

TY101

TYPE B-3 FINAL

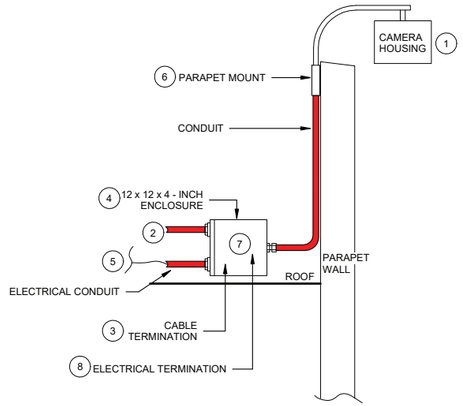

CAMERA MOUNTING DETAIL - WALL PARAPET

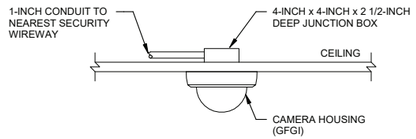

A1 SECURITY CAMERA CEILING MOUNTED

SCALE NTS

DETAIL DRAWING NOTES:

1. CAMERA MOUNTING: PROVIDE DEVICE MOUNTING REQUIREMENTS PER MANUFACTURER RECOMMENDATIONS.
2. CAMERA CONDUIT: REFER TO TY601, TELECOM / DATA AND ELECTRICAL REQUIREMENTS FOR CONTINUATION OF CONDUIT SYSTEM TO WEATHERHEAD AND TO ESS HEADEND.
3. CABLE TERMINATION: TERMINATE FIBER OPTIC CABLING IN DEVICE BOX LOCATED WITHIN AN ACCESSIBLE LOCATION. PROVIDE OUTDOOR RATED MEDIA CONVERTER.
4. ENCLOSURE: PROVIDE NEMA 4 RATED ENCLOSURE AFFIXED TO PARAPET, SEAL ALL OPENINGS. UTILIZE SECURITY SCREWS FOR COVER.
5. ELECTRICAL CONDUIT: PROVIDE ELECTRICAL REQUIREMENTS AND ELECTRICAL DRAWINGS.
6. PARAPET MOUNT CAMERAS MUST ALL BE MOUNTED IN ACCORDANCE WITH CAMERA MANUFACTURER'S PENDANT MOUNTING KIT.
7. DEVICE BOX AND ENCLOSURE MOUNTING: PROVIDE SECURED MOUNTING SUPPORT PER MOUNTING REQUIREMENTS INDICATED WITHIN ELECTRICAL DOCUMENTS.
8. ELECTRICAL TERMINATION AND OUTLET: 110V OUTLET FOR MEDIA CONVERTER NOTED FOR REFERENCE ONLY. SEE ELECTRICAL DRAWINGS.

A3 SECURITY CAMERA PARAPET MOUNT

SCALE NTS

REGISTERED COMMUNICATIONS DISTRIBUTION DESIGNER
Bicsi
David Robinson
BICSI ID # 185303
08 MAY 2026
RCDD

MARK	DESCRIPTION	DATE

DESIGNED BY: S. SELF	ISSUE DATE: MAY 2026
DRAWN BY: C. TINKER	ANG PROJECT NO.: PBXP222050
CHECKED BY: J. HIMES	CONTRACT NO.: FA8903-21-D-0008
SUBMITTED BY: D. PEARSON	TASK ORDER NO.: W50S8R23F0009
SIZE: ANSI D	

OHIO AIR NATIONAL GUARD
MANSFIELD LAHM AIR NATIONAL GUARD BASE, OH

JACOBS GOVERNMENT SERVICES
2600 MICHELSON SR. STE 500
IRVINE, CA 92612

MANSFIELD LAHM AIR NATIONAL GUARD BASE, OH
REPAIR B403 FOR CYBER
FA877006
DETAILS
SECURITY

SHEET ID

TY501

TYPE B-3 FINAL

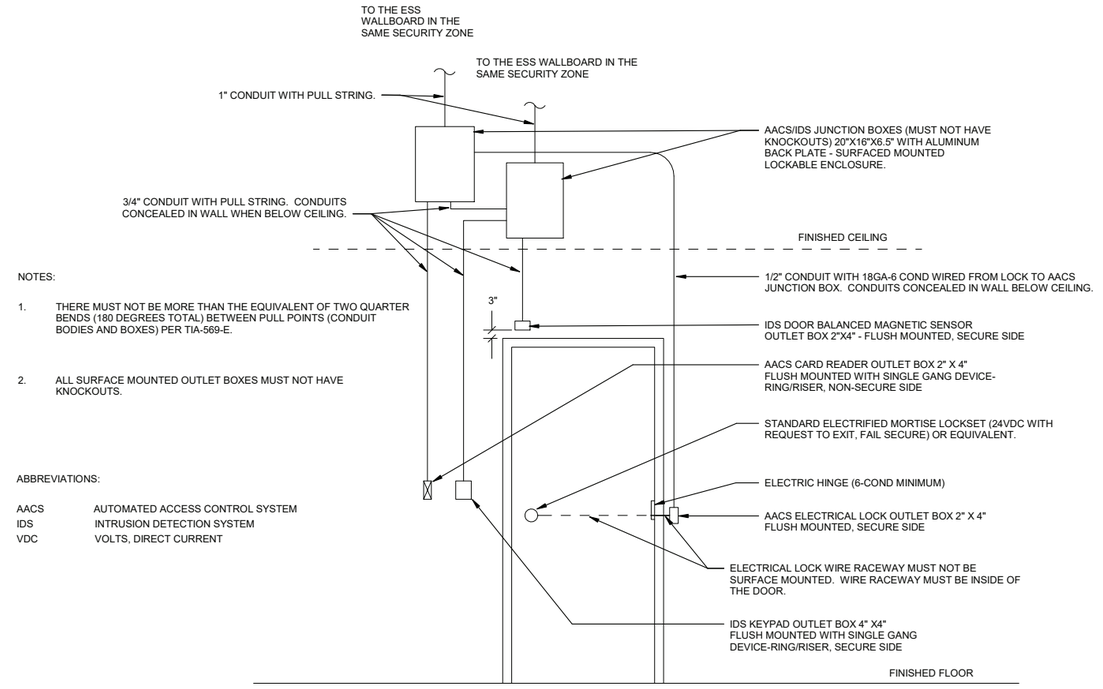

NOTES:

1. THERE MUST NOT BE MORE THAN THE EQUIVALENT OF TWO QUARTER BENDS (180 DEGREES TOTAL) BETWEEN PULL POINTS (CONDUIT BODIES AND BOXES) PER TIA-569-E.

2. ALL SURFACE MOUNTED OUTLET BOXES MUST NOT HAVE KNOCKOUTS.

ABBREVIATIONS:

AACS	AUTOMATED ACCESS CONTROL SYSTEM
IDS	INTRUSION DETECTION SYSTEM
VDC	VOLTS, DIRECT CURRENT

D1 SECURITY SINGLE SECURED DOOR DETAIL (AACS&IDS)

SCALE NTS

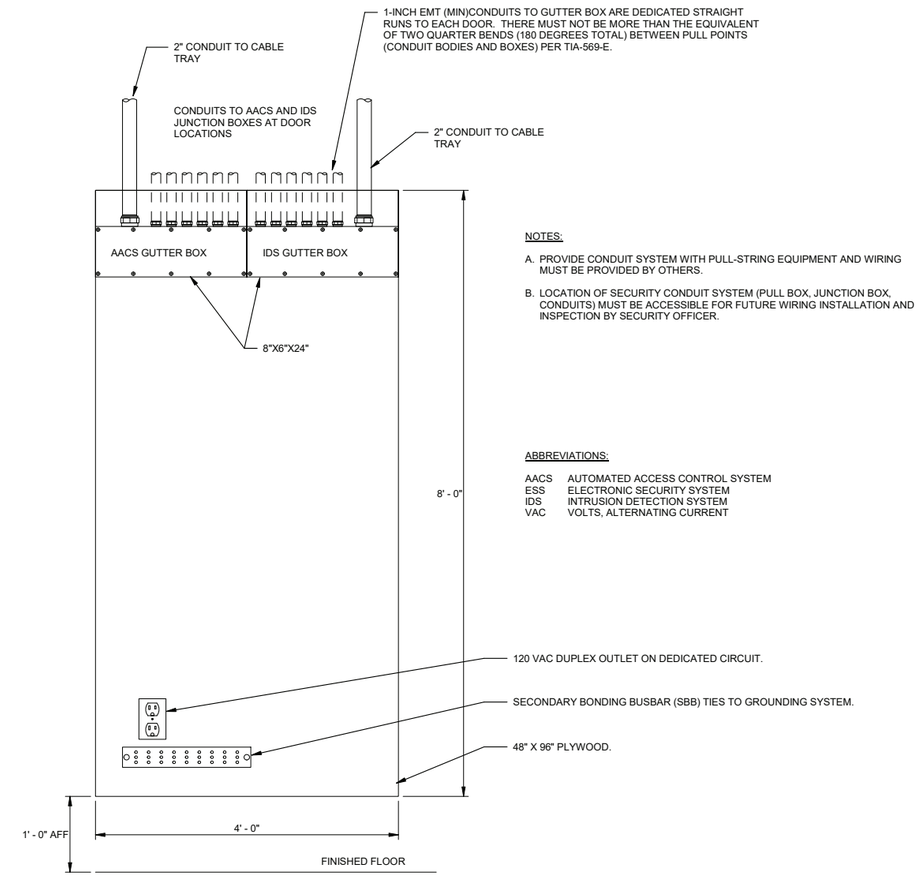

NOTES:

A. PROVIDE CONDUIT SYSTEM WITH PULL-STRING EQUIPMENT AND WIRING MUST BE PROVIDED BY OTHERS.

B. LOCATION OF SECURITY CONDUIT SYSTEM (PULL BOX, JUNCTION BOX, CONDUITS) MUST BE ACCESSIBLE FOR FUTURE WIRING INSTALLATION AND INSPECTION BY SECURITY OFFICER.

ABBREVIATIONS:

AACS	AUTOMATED ACCESS CONTROL SYSTEM
ESS	ELECTRONIC SECURITY SYSTEM
IDS	INTRUSION DETECTION SYSTEM
VAC	VOLTS, ALTERNATING CURRENT

C6 ESS BACKBOARD ELEVATION

SCALE NTS

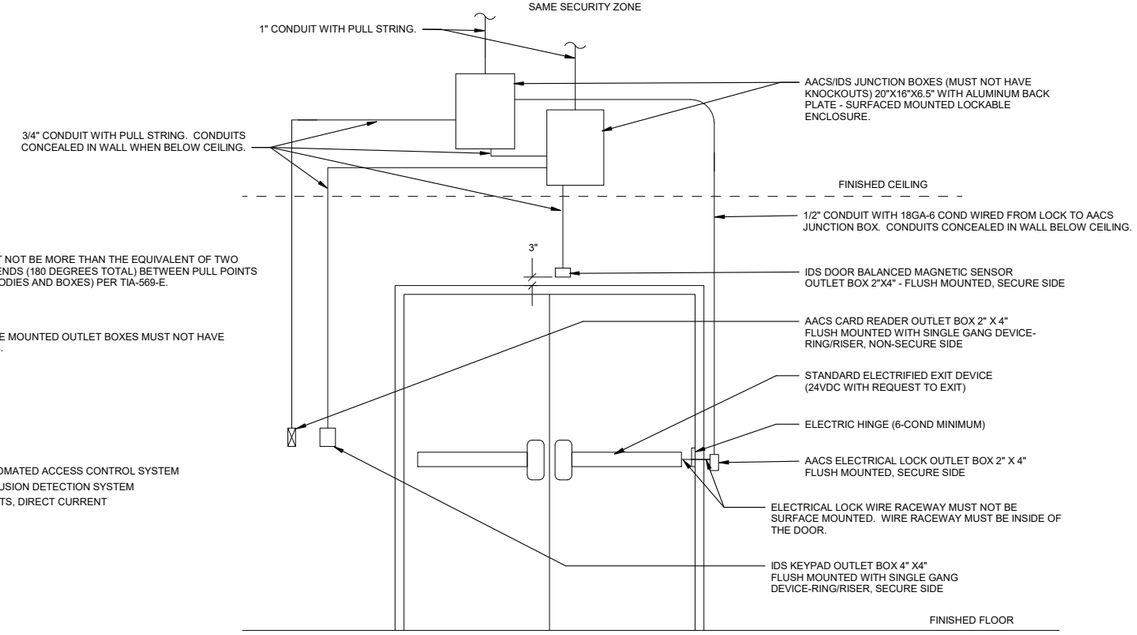

NOTES:

1. THERE MUST NOT BE MORE THAN THE EQUIVALENT OF TWO QUARTER BENDS (180 DEGREES TOTAL) BETWEEN PULL POINTS (CONDUIT BODIES AND BOXES) PER TIA-569-E.

2. ALL SURFACE MOUNTED OUTLET BOXES MUST NOT HAVE KNOCKOUTS.

ABBREVIATIONS:

AACS	AUTOMATED ACCESS CONTROL SYSTEM
IDS	INTRUSION DETECTION SYSTEM
VDC	VOLTS, DIRECT CURRENT

A1 SECURITY DOUBLE SECURED DOOR DETAIL (AACS&IDS)

SCALE NTS

REGISTERED COMMUNICATIONS DISTRIBUTION DESIGNER
Bicsi
David Robinson
BICSI ID # 185303
08 MAY 26
RCDD

MARK	DESCRIPTION	DATE

DESIGNED BY: S. SELF
DRAWN BY: C. TINKER
CHECKED BY: J. HIMES
SUBMITTED BY: D. PEARSON
SIZE: ANSI D
ISSUE DATE: MAY 2026
ANG PROJECT NO.: PBXP222050
CONTRACT NO.: FA8903-21-D-0008
TASK ORDER NO.: W50S8R23F0009

OHIO AIR NATIONAL GUARD
MANSFIELD LAHM AIR NATIONAL GUARD BASE, OH

JACOBS GOVERNMENT SERVICES
2600 MICHELSON SR, STE 500
IRVINE, CA 92612

MANSFIELD LAHM AIR NATIONAL GUARD BASE, OH
REPAIR B403 FOR CYBER
FA877006
DETAILS
SECURITY

SHEET ID

TY502

TYPE B-3 FINAL

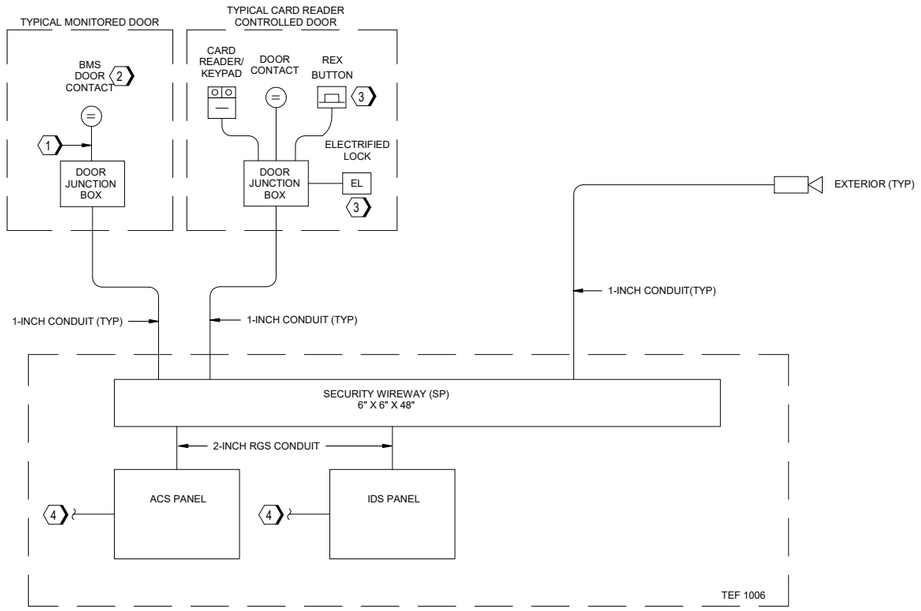

E1 ACS, IDS, CCTV SYSTEMS ONE-LINE DIAGRAM

SCALE NTS

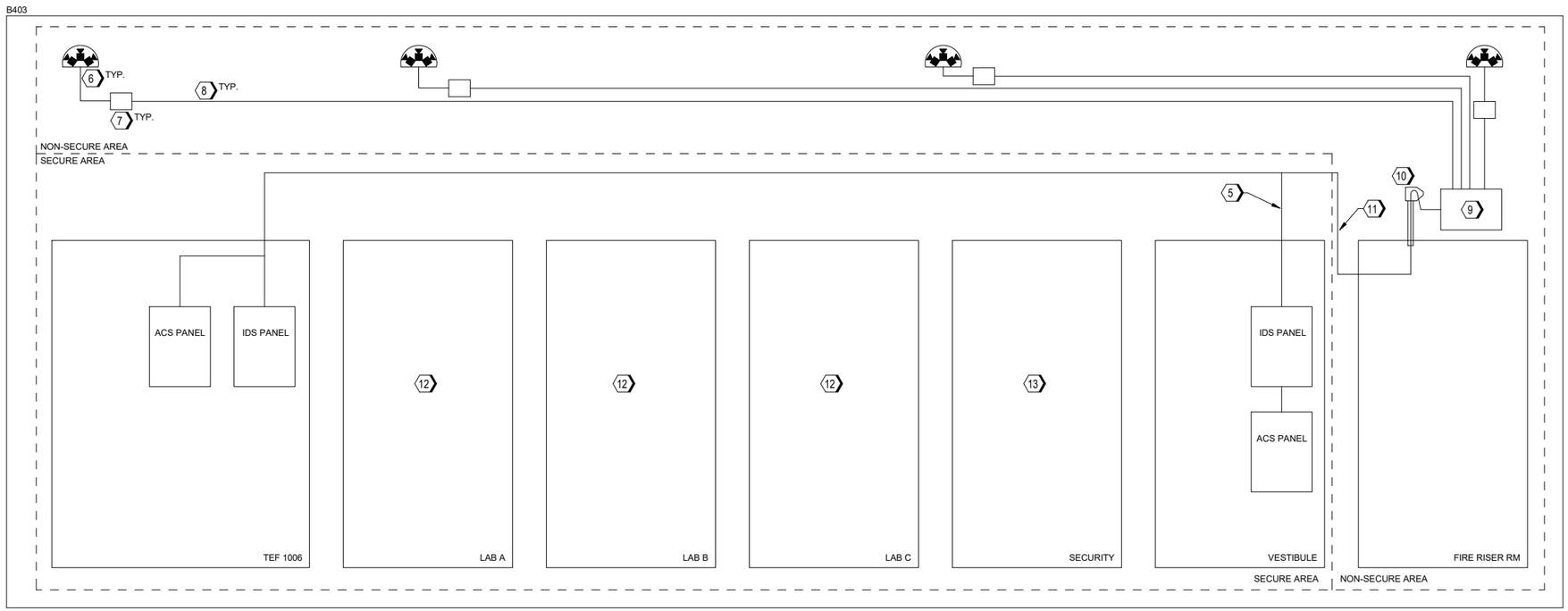

A1 SECURITY ONE-LINE DIAGRAM

SCALE NTS

#SHEET KEYNOTES

1. 3/4-INCH CONDUIT FROM BOX AT DOOR LOCATION TO DOOR DEVICES (TYPICAL).
2. FLUSH MOUNTED BALANCED MAGNETIC CONTACTS AND ELECTRIFIED DOOR LOCKS IN DOORS AND FRAMES PROVIDED UNDER DIVISION 087/100 (TYPICAL). REFER TO DOOR HARDWARE SCHEDULE DOUBLE DOORS WILL HAVE TWO SURFACE MOUNTED CONTACTS. CONTACT MOUNTING BRACKETS AND OTHER HARDWARE WILL BE PROVIDED AS REQUIRED.
3. REQUEST TO EXIT SWITCH INTEGRAL TO DOOR HARDWARE PROVIDED UNDER DIVISION 08 (TYPICAL).
4. 2-INCH CONDUIT TO SECURITY MONITORING EQUIPMENT WORKSTATION LOCATION, LOCATED IN ASSOCIATED TEF.
5. PROVIDE 6-STRAND (MINIMUM) FIBER OPTIC CABLE BETWEEN PRIMARY AND SECONDARY SECURITY PANELS CROSSING THE RF BOUNDARY WITH FIBER AND IN ACCORDANCE WITH PENETRATION DETAILS. SERVE DEVICES OUTSIDE OF THE RF BOUNDARY FROM LOCAL IDS AND ACS PANEL.
6. COPPER JUMPER TO CAMERA ENCLOSURE IN SEAL TIGHT FLEX CONDUIT.
7. NEMA 4 ENCLOSURE - SEE DETAILS AND FLOOR PLANS.
8. 1-INCH RGS CONDUIT COORDINATE WITH ROOFING AND SEAL ALL OPENINGS. OUTDOOR RATED FIBER CABLE.
9. NEMA 4 CONSOLIDATION POINT FOR FIBER CABLES.
10. WEATHERHEAD - SEE DETAILS AND FLOOR PLANS.
11. 6-STRAND GREEN OUTDOOR MMF FOR CAMERAS.
12. INTRUSION DETECTION ZONE - PROGRAM SEPARATE ZONE FOR LOCAL KEYPAD ARM/DISARMING.
13. PROVIDE SECURITY CONTROL STATION FOR MONITORING, PROGRAMMING, AND BADGING.

REGISTERED COMMUNICATIONS DISTRIBUTION DESIGNER
Bicsi
David Robinson
BICSI ID # 185303
08 MAY 2026
RCDD

MARK	DESCRIPTION	DATE

DESIGNED BY: S. SELF
DRAWN BY: C. TINKER
CHECKED BY: J. HIMES
SUBMITTED BY: D. PEARSON
SIZE: ANSI D

ISSUE DATE: MAY 2026
ANG PROJECT NO.: PBXP222050
CONTRACT NO.: FA8903-21-D-0008
TASK ORDER NO.: W50SBR23F0009

OHIO AIR NATIONAL GUARD
MANSFIELD LAHM AIR NATIONAL GUARD BASE, OH

JACOBS GOVERNMENT SERVICES
2600 MICHELSON SR, STE 500
IRVINE, CA 92612

MANSFIELD LAHM AIR NATIONAL GUARD BASE, OH
REPAIR B403 FOR CYBER
FA877006
SINGLE LINE DIAGRAMS
SECURITY

SHEET ID

TY601

Jacobs