648 Monroe Ave. NW
Suite 210
Grand Rapids, MI 49503
P: 616.454.9414
F: 616.454.9415
info@c2ae.com
www.c2ae.com

Transmittal

Project #: 11-0105
Project: Aleda E. Lutz Medical Center Replace Water Tower & Bulk Oxygen Tank, VA Project #655-09-109

Date: March 6, 2012
C2AE Submittal #: 42R1
Specification Section: 221216
Specification Title: Facility Elevated, Potable-Water Storage Tanks
Project Manager: Stephen Dickerson

To: Kevin Russell, COTR
Aleda E. Lutz Medical Center
1500 Weiss St
Saginaw, MI 48602

Distribution:

Enclosures:

☐ Attached ☐ Change Order ☐ Specifications
☐ Report ■ **Shop Drawings** ☐ Under Separate Cover ☐ Other _____
☐ Letter ☐ Submittal Review ☐ Plans

Quantity	Description/Document Title
1	Resubmittal of water tower structural design shop drawing, and structural design calculations

Action Requested:

■ **For Review and Approval** ■ **No Exception Taken** ☐ See Comment Sheet for Notations
☐ For Your Use ☐ Exception As Noted ☐ Resubmit _____ Copies for Review
☐ As Requested ☐ Rejected ☐ Submit _____ Copies for Distribution
☐ Revise and Resubmit ☐ Return _____ Corrected Prints
☐ For Bids Due _____ ☐ Other_____

Notes: C2AE strongly recommends that the original engineer review this submittal.

Kristy P. Baisch, Administrative Assistant
C2AE

(If enclosures are not as noted, kindly notify us at once)

DANIELS
BUILDING CO. INC.

Submittal Transmittal

Detailed, Grouped by Each Number

Aleda E. Lutz VA Medical Center Water Tower Rel **Project # 718-11**
Tel: Fax:

Date: 2/29/2012 **Reference Number: 0138**

Transmitted To:	Gerrad Godley C2AE 725 Prudden Street Lansing, MI 48906 Tel: 517-371-2100 Fax: 517-371-2013	**Transmitted By:**	Lori Lenz Daniels Building Company, Inc. 24317 Indoplex Circle Farmington Hills, MI 48335 Tel: 248-427-8400 Fax: 248-427-8401

Qty	Submittal Package No	Description	Due Date	Package Action
1	0042 - - 1	Water Tower Structural Design, SD & Safety Climb	3/14/2012	Resubmitted

Transmitted For	Delivered Via	Tracking Number
Approval	Email	

Items	Qty	Description	Notes	Item Action
0001	e-mail	221216 - Water Tower Structural Design SD		Resubmitted
0002	e-mail	221216 - Water Tower Structural Design Calcs.		Resubmitted

Cc:	Company Name	Contact Name	Copies	Notes

Remarks

L. Lenz
Signature

2-29-12
Signed Date

RIVER VALLEY ENGINEERING, INC.
111 NORTH PLAZA CT.
VAN BUREN, AR 72956
(479) 410-2208
FAX : (479) 410-2440

Project Number : 2011-393 DATE: 11/3/2011 Page :
Calculated by : JPL Rev :

☒ REVIEWED, NO EXCEPTIONS TAKEN ☐ REJECTED
☐ REVIEWED, MAKE CORRECTIONS ☐ REVISE AND RESUBMIT
☐ RETURNED UNCHECKED ☐ SUBMIT SPECIFIED ITEM

Corrections or comments made on the shop drawings during this review do not relieve contractor from compliance with requirements of the drawings and specifications. This check is only for review of general compliance with the design concept of the project and general compliance with the information given in the contract documents. The contractor is responsible for confirming and correlating all quantities and dimensions; selecting fabrication processes and techniques of construction; coordinating his work with that of all other trades; and performing his work in a safe and satisfactory manner.

WBCM
WHITNEY BAILEY COX & MAGNANI, LLC

Date 3/13/2012 By PLR

■ NO EXCEPTION TAKEN ☐ REVISE AND RESUBMIT
☐ EXCEPTION AS NOTED ☐ REJECTED
☐ SEE COMMENT SHEET FOR NOTATIONS

This review is only for general conformance with the design concept and the information given in the Construction Documents. Corrections or comments made on the submittal during this review do not relieve the contractor from compliance with the requirements of the plans and specifications. Review of a specific item shall not include review of an assembly of which the item is a component. The Contractor is responsible for: dimensions to be confirmed and correlated at the jobsite; information that pertains solely to the fabrication processes or to the means, methods, techniques, sequences and procedures of construction; coordination of the Work with that of all other trades and performing all Work in a safe and satisfactory manner.

By K. Homic Date C2AE 3/6/2012

CALCULATIONS FOR

250,000 GALLONS

WATER STORAGE TANK

ICHIGAN

Department of Veterans Affairs
Aleda E. Lutz VA Medical Center (138)
1500 Weiss Street
Saginaw, MI 48602

☑ APPROVED ☐ APPROVED AS NOTED
☐ REJECTED ☐ REVISE AND RESUBMIT
☐ SUBMIT SPECIFIED ITEM ☐ SEE COMMENT SHEET

This review is only for general conformance with the design concept of the project and general compliance with the information in the Contract Documents. Corrections or comments made on the shop drawings during this review do not relieve contractor from compliance with the requirements of the plans and specifications. Approval of a specific item shall not include approval of an assembly of which the item is a component. Contractor is responsible for: dimensions to be confirmed and correlated at the jobsite; information that pertains solely to the fabrication processes or to the means, methods, techniques, sequences and procedures of construction; coordination of the Work of all trades; and for performing all Work in a safe and satisfactory manner.

Date: Mar 15, 2012 By: Kevin S. Russell, PE

MAGUIRE IRON, INC.
By: Date 2/28/12

STATE OF MICHIGAN
JOHN P. LONGNECKER
ENGINEER
No. 43420
LICENSED PROFESSIONAL ENGINEER
2/27/12

SPHEROID TANK DESIGN

(Tank Design Conforms to AWWA D-100-2005 Standard)

Project Number	2011-393
City and State	Saginaw, MI
Date / Time	8/23/2011 4:09:07 PM
Design Capacity (Gal)	250000
Working Capacity (Gal)	252473

DESIGN PARAMETERS

Height to High Water Line (ft)	151.0000
Head Range (ft)	31.2500
Free Board (ft)	6.6976
Snow Load (psf)	40
Wind Speed (mph)	90
Seismic Use Group	III
Site Class (A,B,C,D,E,F)	E
Seismic Importance Factor	1.5
Earthquake Response Acc. 0.2 Sec, Ss	0.08
Earthquake Response Acc. 1.0 Sec, S1	0.037
Longer-Period Ground Motion, TL	12
Short Period Site Coefficient, Fa	2.5
Long Period Site Coefficient, Fv	3.5
Damped Short Period Site Coef., SDS	0.13334
Damped Long Period Site Coef., SD1	0.08633765
Natural Period of Tower (Seconds)	4.0000
Equivalent Fixed Percentage (%)	0.7709
Iterations to Convergence	3
P-delta Moment due to Seismic (ft-kips)	854.0278
P-delta Moment due to Wind (ft-kips)	463.3768
Deflection Due to Seismic (in)	4.3154
Deflection Due to Wind (in)	2.3362

DESIGN PARAMETERS (cont...)

Corrosion Allowance

Wetted (in)	0.0000
Non-wetted (in)	0.0000

Design Notes:

1. Seismic and Wind Design is per Worst Case of AWWA D-100, IBC and ASCE-7 methods.
2. Specified Additional Shear Due to Antenna (kips) 0.0000
3. Specified Additional Moment Due to Antenna (ft-kips) 0.0000

TANK GEOMETRY

Diameter (ft)	43.6660
Overall Height of Tank (ft)	157.6976
Radius of Roof (ft)	24.4562
Height of Roof (ft)	7.1631
Radius of Knuckle (ft)	15.5000
Offset of Knuckle (ft)	6.3330
Height of Top Knuckle (ft)	10.9602
Height of Bottom Knuckle (ft)	10.9602
Height of Upper Cone (ft)	11.3287
Diameter at Top of Upper Cone (ft)	34.5863
Radius of Transition (ft)	5.0000
Height of Transition (ft)	3.5355
Diameter at Top of Transition (ft)	11.9289
Diameter of Pedestal (ft)	9.0000
Height of Pedestal (ft)	88.5417
Diameter of Base Cone (ft)	28.0000
Height of Base Cone (ft)	25.0000
Top of Pedestal to Low Water Line (ft)	6.0000
Diameter of Access Tube (ft)	3.5000

Design of Tank Sections

Roof

Thickness (in)	0.2500
Weight of Roof (kips)	11.2271
Surface Area of Roof (sqft)	1100.6967
Height to Centroid of Plate (ft)	2.6861
Height to Centroid of Projected Area (ft)	2.6861
Volume of Water in Roof (cuft)	425.4315
Weight of Water in Roof (kips)	26.5469
Height to Centroid of Water (ft)	0.2327
Shear Due to Earthquake by Water (kips)	0.2046
Shear Due to Earthquake by Plate (kips)	0.0865
Moment Due to Earthquake by Water (ft-kips)	0.0476
Moment Due to Earthquake by Plate (ft-kips)	0.3100

Top Knuckle

Thickness (in)	0.2500
Weight of Top Knuckle (kips)	15.8285
Surface Area of Top Knuckle (sqft)	1551.8105
Height to Centroid of Plate (ft)	5.3864
Height to Centroid of Projected Area (ft)	5.2846
Volume of Top Knuckle (cuft)	14418.7491
Weight of Water in Top Knuckle (kips)	899.7299
Height to Centroid of Water (ft)	5.0974
Shear Due to Earthquake by Water (kips)	6.9358
Shear Due to Earthquake by Plate (kips)	0.1220
Moment Due to Earthquake by Water (ft-kips)	37.6446
Moment Due to Earthquake by Plate (ft-kips)	1.9158

Bottom Knuckle

Thickness (in)	0.3750
Weight of Bottom Knuckle (kips)	23.7427
Surface Area of Bottom Knuckle (sqft)	1551.8105
Height to Centroid of Plate (ft)	5.6755
Height to Centroid of Projected Area (ft)	2.6861
Volume of Bottom Knuckle (cuft)	14418.7491
Weight of Water in Bottom Knuckle (kips)	899.7299
Height to Centroid of Water (ft)	5.8628
Shear Due to Earthquake by Water (kips)	6.9358
Shear Due to Earthquake by Plate (kips)	0.1830
Moment Due to Earthquake by Water (ft-kips)	156.5676
Moment Due to Earthquake by Plate (ft-kips)	7.2278

DESIGN OF TANK SECTIONS (CONT'D)

Upper Cone

Design - Section	Thickness (in)	Weight (kips)	Height (ft)
1	0.4375	9.2269	3.7762
2	0.5000	7.9601	3.7762
3	0.5625	6.0471	3.7762

Transition

Thickness (in)	0.6875
Weight of Transition (kips)	3.4594
Surface Area of Transition (sqft)	123.3311
Height to Centroid of Plate (ft)	1.9518
Height to Centroid of Projected Area (ft)	1.8516
Volume of Transition (cuft)	274.7538
Weight of Water in Transition (kips)	17.1446
Height to Centroid of Water (ft)	1.9379
Shear Due to Earthquake by Water (kips)	0.1322
Shear Due to Earthquake by Plate (kips)	0.0194
Moment Due to Earthquake by Water (ft-kips)	393.2963
Moment Due to Earthquake by Plate (ft-kips)	7.6176

Access Cone

Thickness (in)	.5000
Weight of Access Cone (kips)	1.8328

Access Tube

Thickness of Bottom 15 Feet (in)	.3750
Thickness of Remaining Height (in)	.3750
Weight of Access Tube (kips)	6.5803

DESIGN OF TANK SECTIONS (CONT'D)

Pedestal

Design - Section	Thickness (in)	Weight (kips)	Height (ft)
1	0.5000	4.6144	8.0000
2	0.5000	9.2287	8.0000
3	0.5000	13.8431	8.0000
4	0.5000	18.4575	8.0000
5	0.5625	23.6487	8.0000
6	0.5625	28.8398	8.0000
7	0.5625	34.0310	8.0000
8	0.5625	39.2222	8.0000
9	0.5625	44.4133	8.0000
10	0.5625	49.6045	8.0000
11	0.6250	55.3725	8.0000
12	0.6250	55.7630	0.5417

Base Cone

Design - Section	Thickness (in)	Weight (kips)	Height (ft)
1	0.6250	3.6062	4.0000
2	0.5625	7.9366	7.0000
3	0.4375	8.4070	7.0000
4	0.4375	10.6410	7.0000

Base Plate

Base Plate Thickness (in) 1.1250

Note: Use a standard 1 in. of non-shrink grout under the base plate.

Anchor Bolt -- Mild Steel

Anchor Bolt Size (in)	Quantity Req'd	Tension Load (kip)	Minimum Embedment (in)
1.50	19	26334	58.91
1.75	14	35511	68.09
2.00	11	46683	78.32

Anchor Bolt With Plate Attached (Breakout Procedure)

Anchor Bolt Size (in)	Quantity Req'd	Tension Load(Ult) (kip)	Minimum Embedment (in)
1.50	15	48500	25.00
1.75	15	48500	25.00
2.00	15	48500	25.00

Anchor Bolt Chair

Anchor Bolt Size (in)	Top Plate Thickness (in)	Top Plate Width (in)	Side Plate Thickness (in)	Anchor Chair Height (in)
1.50	1.1250	9.0000	0.5000	12.0000
1.75	1.2041	9.0000	0.5000	12.0000
2.00	1.4068	9.0000	0.5000	12.0000

LOADS ON THE FOUNDATION

Loads From Plate Steel

Section of Tank	Weight (Kips)
Roof	11.2271
Top Knuckle	15.8285
Bottom Knuckle	23.7427
Upper Cone	23.2341
Transition	3.4594
Pedestal	55.7630
Base Cone	30.5908
Base Plate	4.4899
Access Shaft	6.5803
Access Cone	1.8328
Total Load From Plate Steel	172.2587
Loads From Snow	37.5801
Loads From Water	2144.8600
Total Load On Foundation From Tank	2354.6988

Moments and Shears on the Foundation

Wind Moment at Top of Pedestal (ft-kips)	536.2152
Wind Shear at Top of Pedestal (kips)	22.4514
Seismic Moment at Top of Pedestal (ft-kips)	400.9140
Seismic Shear at Top of Pedestal (kips)	17.2966
Wind Moment at Top of Foundation (ft-kips)	4632.8159
Wind Shear at Top of Foundation (kips)	43.8689
Seismic Moment at Top of Foundation (ft-kips)	3254.5966
Seismic Shear at Top of Foundation (kips)	17.9623

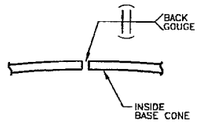

THIS IS A TYPICAL DETAIL OF ALL VERTICAL WELDS IN BASE CONES WHERE THICKNESS IS LESS THAN OR EQUAL TO 3/8".

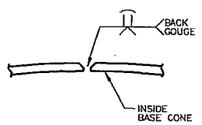

THIS IS A TYPICAL DETAIL OF ALL VERTICAL WELDS IN BASE CONES WHERE THICKNESS IS GREATER THAN 3/8".

1 / E1 DETAIL

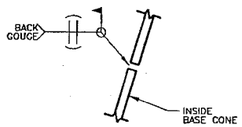

THIS IS A TYPICAL DETAIL OF ALL HORIZONTAL WELDS IN BASE CONES WHERE THICKNESS IS LESS THAN OR EQUAL TO 3/8".

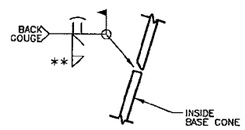

THIS IS A TYPICAL DETAIL OF ALL HORIZONTAL WELDS IN TANK AND BASE CONE WHERE THICKNESS IS GREATER THAN 3/8".

2 / E1 DETAIL

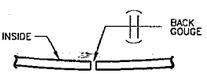

THIS IS A TYPICAL DETAIL OF ALL VERTICAL WELDS IN TANK AND PEDESTAL WHERE THICKNESS IS LESS THAN OR EQUAL TO 3/8"

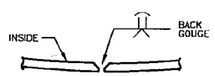

THIS IS A TYPICAL DETAIL OF ALL VERTICAL WELDS IN TANK AND PEDESTAL WHERE THICKNESS IS GREATER THAN 3/8"

3 / E1 DETAIL

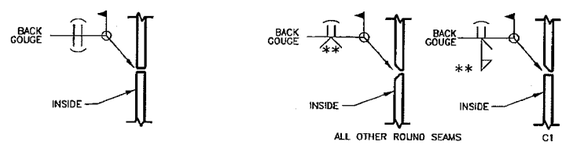

THIS IS A TYPICAL DETAIL OF ALL HORIZONTAL WELDS IN TANK AND PEDESTAL WHERE THICKNESS IS LESS THAN OR EQUAL TO 3/8"

THIS IS A TYPICAL DETAIL OF ALL HORIZONTAL WELDS IN TANK AND PEDESTAL WHERE THICKNESS IS GREATER THAN 3/8"

** WHEN THE DIFFERENCE IN THICKNESSES BETWEEN ADJACENT HORIZONTALLY WELDED PLATES EXCEEDS 1/16", A 3:1 TAPERING SHALL BE PERFORMED BETWEEN THE PLATES. THIS TAPERING MAY BE ACHIEVED BY TAPERING THE WELD OR BY TAPERING THE THICKER PLATE.

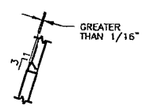

4 / E1 DETAIL

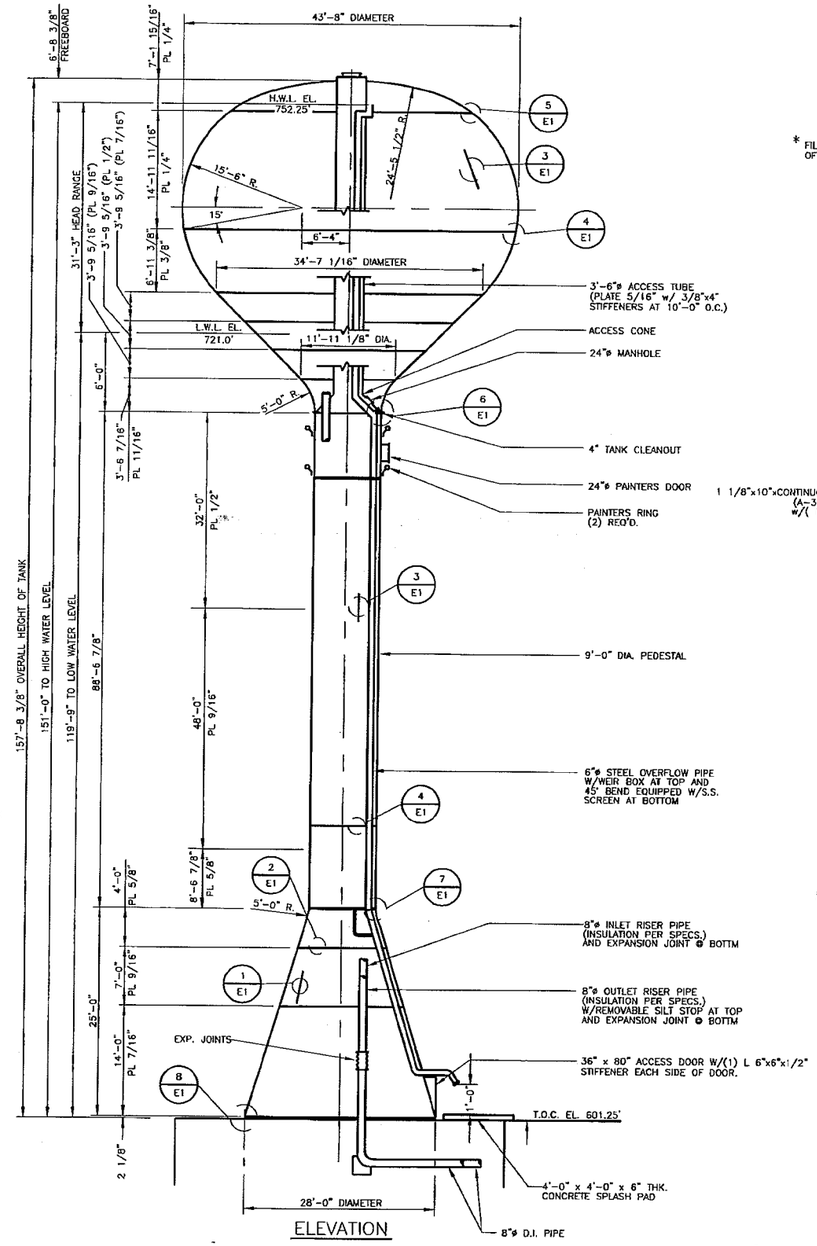

ELEVATION

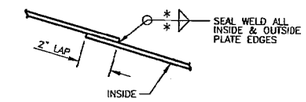

* FILLET WELD SIZE SHALL BE EQUAL TO THICKNESS OF THINNER OF MEMBERS JOINED.

5 / E1 DETAIL

TANK DESIGN DATA

CAPACITY	250,000 GALLONS
SNOW LOAD	40 PSF
WIND SPEED	90 MPH
SEISMIC	AWWA D100-05, IBC
STANDARD	AWWA D100-05, IBC
MATERIALS	STEEL PLATE-ASTM A36 ANCHOR RODS-ASTM A36 OR ASTM F1554 Gr. 36
CORROSION ALLOWANCE	NONE
LIGHTING, FIXTURES, AND CONTROLS	PER PROJECT SPECIFICATIONS INCLUDING CATHODIC PROTECTION
RADIOGRAPHIC EXAMINATION	SPOT X-RAY PER AWWA D100-05
PAINTING AND DISINFECTION	PER PROJECT SPECIFICATIONS
INSULATION	PER PROJECT SPECIFICATIONS
TESTING	PER AWWA D100-05
PROJECT SPECIFICATIONS	SPECIFICATION FOR 250,000 GALLON ELEVATED WATER STORAGE TANK FOR SAGINAW, MICHIGAN BY WBCM ARCHITECTURE ENGINEERING CONSULTANTS WITH GEOTECHNICAL REPORT BY SCHNABEL ENGINEERING DATED: NOVEMBER, 2010. TOWER IS IN COMPLIANCE WITH VA SEISMIC DESIGN REQUIREMENTS HANDBOOK H-18-8

ALL BUTT WELDED JOINTS MUST BE FULL PENETRATION AND FULL FUSION.

ALL COMPRESSION AND TENSION RING RADIAL WELDS ARE TO BE FULL PENETRATION AND FULL FUSION.

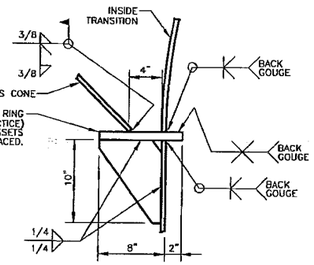

6 / E1 DETAIL

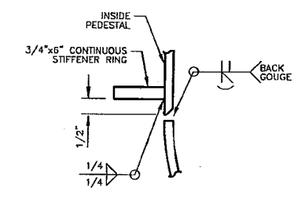

7 / E1 DETAIL

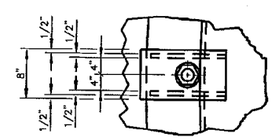

A / E1 DETAIL

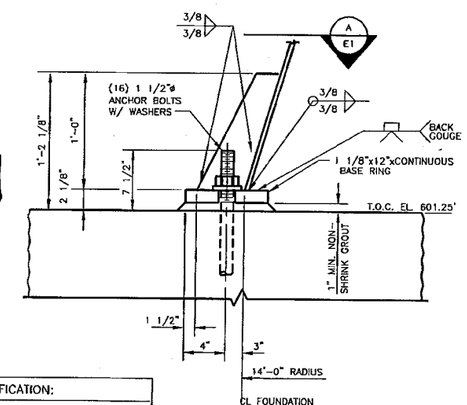

8 / E1 DETAIL

STATE OF MICHIGAN
JOHN P. LONGNECKER
ENGINEER
No. 43420
PROFESSIONAL ENGINEER
LICENSED

CONTRACTOR'S CERTIFICATION:

Contractor has determined or verified all quantities, dimensions, field construction criteria, materials, catalog numbers, and similar data, and has coordinated the information within the submittal with the requirements of the contract documents, and assumes full responsibility for so doing.

MAGUIRE IRON, INC.
Date: 2/28/12

I HEREBY CERTIFY THAT THIS PLAN, SPECIFICATION OR REPORT WAS PREPARED BY ME OR UNDER MY DIRECT SUPERVISION AND THAT I AM A DULY LICENSED PROFESSIONAL ENGINEER UNDER THE LAWS OF THE STATE OF MICHIGAN

DATE 4/27/12 REG.NO. 43420

NO.	DATE	DR. BY	CK. BY	DESCRIPTION
01	11-22-11	DAS	JPL	SEE REVISION NUMBER FOR CHANGE
02	01-24-12	DAS	JPL	SEE SHEET 2 FOR CHANGES
03	02-27-12	DAS	JPL	GENERAL DRAWING MODIFICATION

SCALE NONE
DR. DAS DATE 11-03-11
CK. JPL DATE 11-03-11

River Valley Engineering, Inc.
(479) 410-2206
Fax: (479) 410-2440
111 North Plaza Ct.
Van Buren, AR 72956

Maguire Iron, Inc.
GENERAL CONTRACTOR
SIOUX FALLS, SOUTH DAKOTA

TANK ELEVATION AND DETAILS
250,000 GALLON SPHEROID
SAGINAW, MICHIGAN

STRUCTURAL DESIGN
DATE 11-03-11
RVE DWG. FILE NAME C:\MAGUIRE\2011-393E1.DWG
SHEET 1 OF 2
RVE PROJECT NO. 2011-393
DRAWING NO. 2011-393E1

NORTH

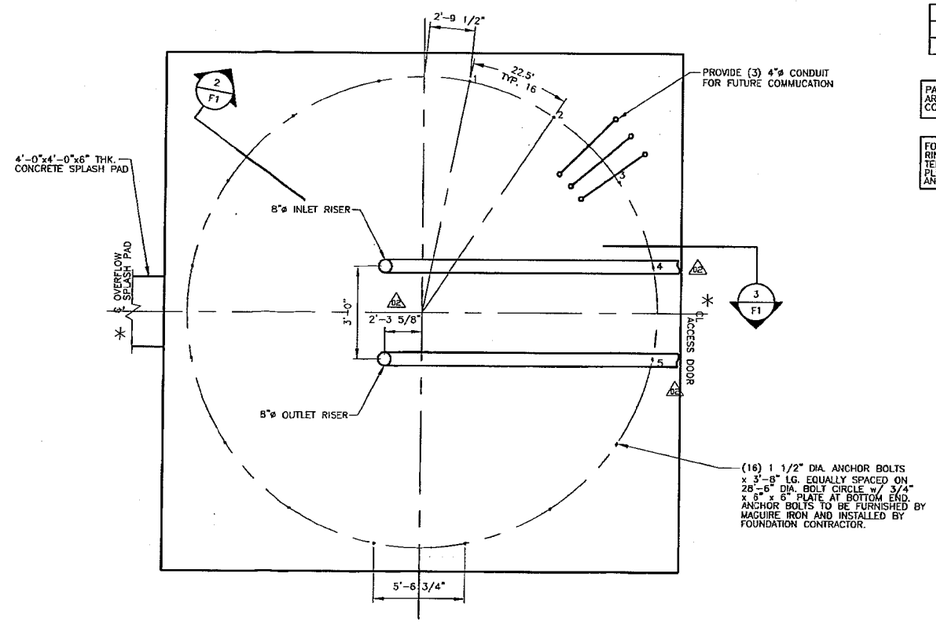

1/F1 FOUNDATION PLAN

ANCHOR BOLT CHORD DIMENSIONS			
1 TO 2	1 TO 3	1 TO 4	1 TO 5
5'-6 3/4"	10'-10 7/8"	15'-10"	20'-1 13/16"

PANEL BOX, ELECTRIC BRACKETS AND ELECTRICAL PIPE SLEEVES ARE TO BE LOCATED AND IDENTIFIED BY PROJECT ENGINEER, CONTRACTOR AND APPLICABLE SUBCONTRACTORS.

FOUNDATION CONTRACTOR TO PROVIDE SLEEVES IN FOUNDATION RINGWALL FOR POWER SUPPLY LINE, PLUMBING AND TELEPHONE LINE. COORDINATE WITH ELECTRICAL CONTRACTOR, PLUMBING CONTRACTOR AND TELEPHONE COMPANY FOR SIZE AND LOCATION.

NOTE:
FOUNDATION DESIGN BY WBCM

■ NO EXCEPTION TAKEN
☐ REVISE AND RESUBMIT
☐ EXCEPTION AS NOTED
☐ REJECTED
☐ SEE COMMENT SHEET FOR NOTATIONS

This review is only for general conformance with the design concept and the information given in the Construction Documents. Corrections or comments made on the submittal during this review do not relieve the contractor from compliance with the requirements of the plans and specifications. Review of a specific item shall not include review of an assembly of which the item is a component. The Contractor is responsible for: dimensions to be confirmed and correlated at the jobsite; information that pertains solely to the fabrication processes or to the means, methods, techniques, sequences and procedures of construction; coordination of the Work with that of all other trades and performing all Work in a safe and satisfactory manner.

By K. Homic Date C2AE 3/6/2012

CONTRACTOR'S CERTIFICATION:

Contractor has determined or verified all quantities, dimensions, field construction criteria, materials, catalog numbers, and similar data, and has coordinated the information within the submittal with the requirements of the contract documents, and assumes full responsibility for so doing.

MAGUIRE IRON, INC.
Date 2/28/12

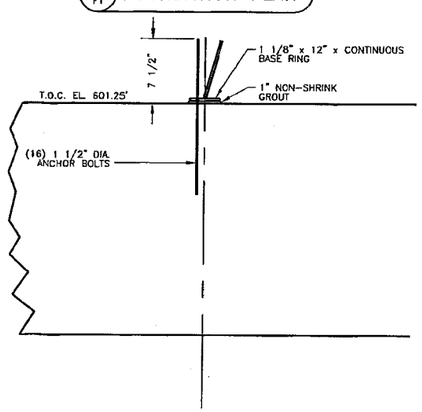

2/F1 SECTIONAL ELEVATION THROUGH RINGWALL

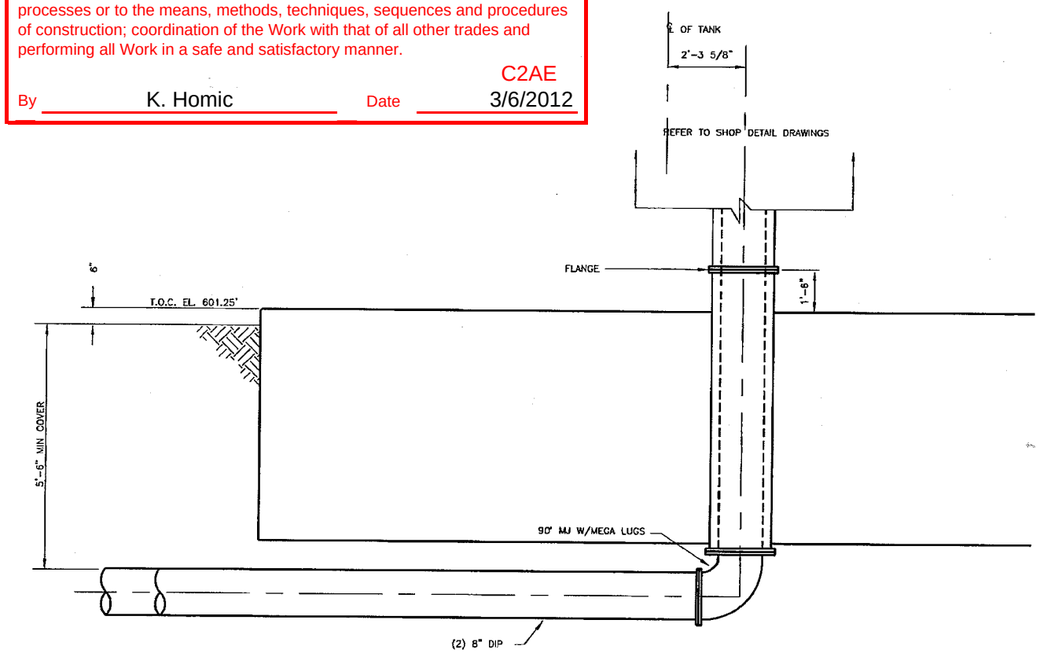

3/F1 SECTIONAL ELEVATION AT RISER PIPE

I HEREBY CERTIFY THAT THIS PLAN, SPECIFICATION OR REPORT WAS PREPARED BY ME OR UNDER MY DIRECT SUPERVISION AND THAT I AM A DULY LICENSED PROFESSIONAL ENGINEER UNDER THE LAWS OF THE STATE OF MICHIGAN

DATE_____ REG.NO._____

NO.	DATE	DR. BY	CK. BY	DESCRIPTION
01	11-22-11	DAS	JPL	SEE REVISION NUMBER FOR CHANGE
02	01-24-12	DAS	JPL	SEE REVISION NUMBER FOR CHANGE
03	02-27-12	DAS	JPL	GENERAL DRAWING MODIFICATION

SCALE NONE
DR. DAS DATE 11-03-11
CK. JPL DATE 11-03-11

River Valley Engineering, Inc.
(479) 410-2208
Fax: (479) 410-2440
111 North Plaza Ct.
Van Buren, AR 72956

Maguire Iron, Inc.
GENERAL CONTRACTOR
SIOUX FALLS, SOUTH DAKOTA

TANK ELEVATION AND DETAILS
250,000 GALLON SPHEROID
SAGINAW, MICHIGAN

RVE DWG. FILE NAME: C:\MAGUIRE\2011-393E1.DWG
SHEET 1 OF 2
RVE PROJECT NO. 2011-393
DRAWING NO. 2011-393E1

Maguire Iron, Inc.

SUBMITTAL TRANSMITTAL LETTER

MAGUIRE IRON, INC
PO BOX 1446
1610 N MINNESOTA AVE
SIOUX FALLS, SD 57104
PHONE: (605) 334-9749
FAX: (605) 334-9752

MEDICAL CENTER :	ALEDA E. LUTZ VA MEDICAL CENTER
CONTRACTOR :	DANIELS BUILDING COMPANY
VA PROJECT :	655-09-109
SPECIFICATION SECTION# :	22 12 16
DRAWING # :	CONTRACT DRAWINGS
MANUFACTURER / BRAND :	MAGUIRE IRON

1ST SUBMITTAL X

RESUBMITTED SAMPLE _____

SUBMITTAL DESCRIPTION

SHOP DRAWINGS -

CONTRACTOR'S CERTIFICATION:

Contractor has determined or verified all quantities dimensions field construction criteria, materials catalog numbers and similar data, and has coordinated the information within the submittal with the require-ments of the contract documents, and assumes full responsibility for so doing.

MAGUIRE IRON, INC

By _____ Date 1/31/12

Department of Veterans Affairs
Aleda E. Lutz VA Medical Center (138)
1500 Weiss Street
Saginaw, MI 48602

- [ ] APPROVED
- [x] APPROVED AS NOTED
- [ ] REJECTED
- [ ] REVISE AND RESUBMIT
- [ ] SUBMIT SPECIFIED ITEM
- [ ] SEE COMMENT SHEET

This review is only for general conformance with the design concept of the project and general compliance with the information in the Contract Documents. Corrections or comments made on the shop drawings during this review do not relieve contractor from compliance with the requirements of the plans and specifications. Approval of a specific item shall not include approval of an assembly of which the item is a component. Contractor is responsible for: dimensions to be confirmed and correlated at the jobsite; information that pertains solely to the fabrication processes or to the means, methods, techniques, sequences and procedures of construction; coordination of the Work of all trades; and for performing all Work in a safe and satisfactory manner.

Date: Feb 25, 2012 By: Kevin S. Russell, PE

- [ ] NO EXCEPTION TAKEN
- [ ] REVISE AND RESUBMIT
- [x] EXCEPTION AS NOTED
- [ ] REJECTED
- [ ] SEE COMMENT SHEET FOR NOTATIONS

This review is only for general conformance with the design concept and the information given in the Contract Documents. Corrections or comments made on the submittal during this review do not relieve the contractor from compliance with the requirements of the plans and specifications. Review of a specific item shall not include review of an assembly of which the item is a component. The Contractor is responsible for: dimensions to be confirmed and correlated at the jobsite; information that pertains solely to the fabrication processes or to the means, methods, techniques, sequences and procedures of construction; coordination of the Work with that of all other trades and performing all Work in a safe and satisfactory manner.

C2ae

By Kelly Gotlamic Date 21 Feb 2012

*Provide weir box per drawings.

* Verify Meter to be installed on the pipe flowing into the tank.

SEE NOTE ON WATER TOWER PAGE.

MAGUIRE IRON, INC.

P.O. BOX 1446
SIOUX FALLS, SD 57101
PHONE (605) 334-9749
FAX (605) 275-1640
www.maguireiron.com

WATER TOWER SPECIALISTS – ESTABLISHED 1915

250MG Spheroid - SAGINAW, MI

250-E1	Elevation
250-F1	Foundation
250-1	Baseplate & Anchors
250-2	8" Double Riser Pipe Details (113'-0" outlet)(126'-0" inlet)
250-3	Basecone Geometry & Plates 28'-0" x 25'-0"
250-4	Bottom Landing & Drain Assembly
250-5	Top Landing & Column Manway
250-6	9'-0" Column Layout & Support Channels
250-7	Column Section Details
250-8	Top Column Details
250-9	42" Drywell Details
250-10	Drywell Ladders
250-11	Transition Details & Plates
250-12	Tank Geometry
250-13	Chords and Arcs
250-14	6" Overflow Pipes & Accessories (107'-0" LF)
250-15	Door & Door Cutting Details (4 3/4")
250-16	Tower Ladders (1) 28'-0" (4) 20'-0" (2) 8'-0"
250-17	Access Hatches
250-18	16" Fail-Safe Vent, Dollar Plate & Obstruction Light Bracket
250-19	Roof Orientation & 12' Tubular Roof Handrail
250-20	Electrical
250-21	Radiography Shop & Field

CONTRACTOR'S CERTIFICATION:

Contractor has determined or verified all quantities, dimensions, field construction criteria, materials, catalog numbers, and similar data, and has coordinated the information within the submittal with the requirements of the contract documents, and assumes full responsibility for so doing.

MAGUIRE IRON, INC.

By _____ Date 1/30/12

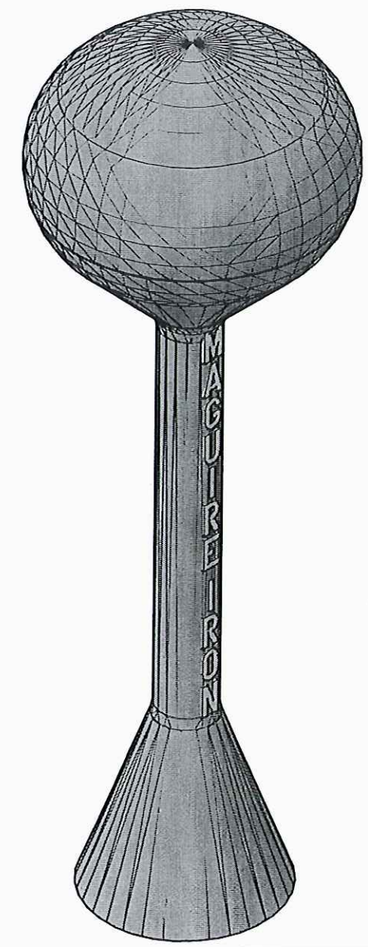

* NOTE, FIELD INSTALL ALL CATHODIC PROTECTION EQUIPMENT, SEE MANUFACTURES DRAWINGS FOR DETAILS *

Daniels Building Company
24317 Indoplex Circle, Farmington Hills, MI 48335

C2ae Project #VA 655-09-109 VA Saginaw Water Tower	Submittal # 042-221216
Received from Contractor Maguire Iron, Inc.	Date 2/6/2012
Received from Architect	Date

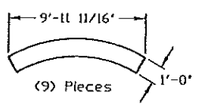

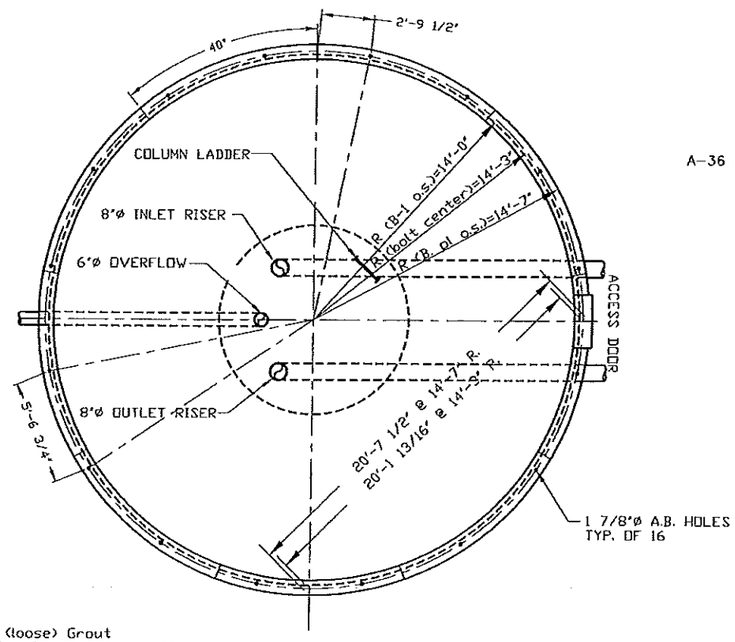

Note:
Include (loose) Grout
Shims 16 = PL 1' x 6' x 0'-6'
6 = Sacks of Grout

Wgt.=4062#

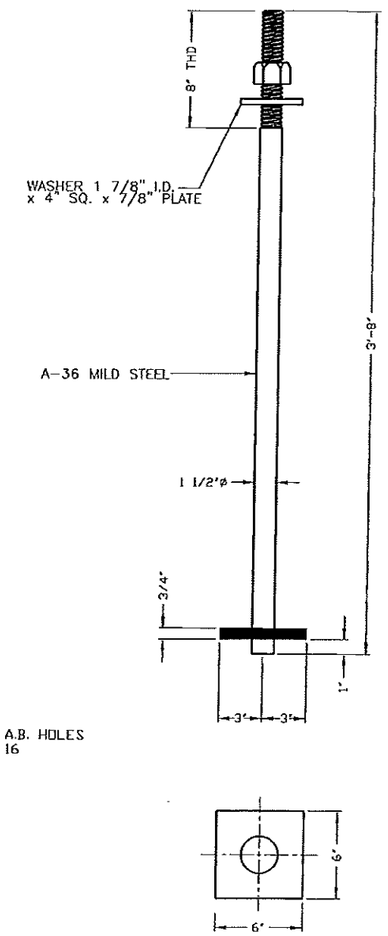

QTY. OF 16 ANCHOR BOLTS

32 ANCHOR CHAIR SIDES

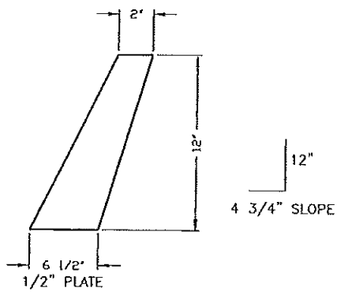

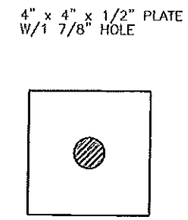

16 WASHERS

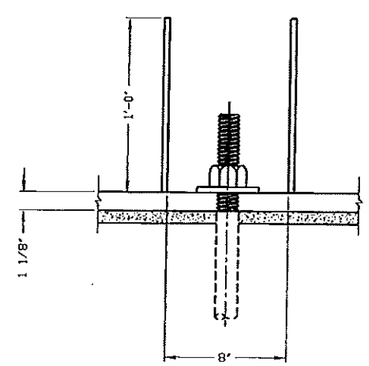

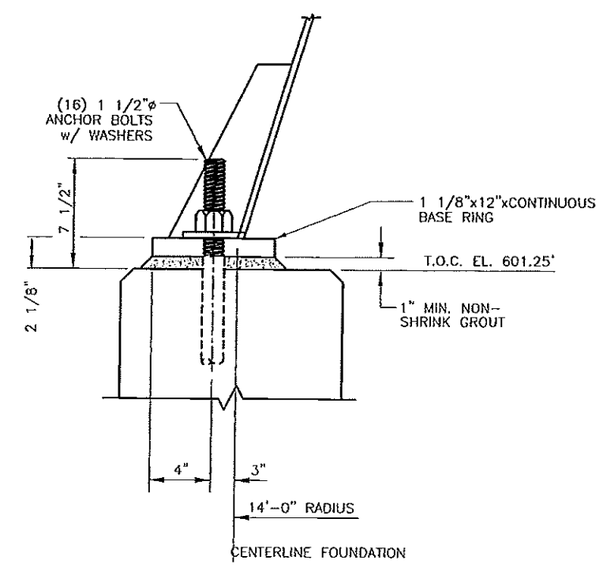

I HEREBY CERTIFY THAT THIS PLAN, SPECIFICATION OR REPORT WAS PREPARED BY ME OR UNDER MY DIRECT SUPERVISION AND THAT I AM A DULY REGISTERED PROFESSIONAL ENGINEER UNDER THE LAWS OF THE STATE OF MICHIGAN

DATE _____ REG. NO. _____

NO.	DATE	DR. BY	CK. BY	DESCRIPTION

SCALE	NONE		
DR.	DAS	DATE	01-27-12
CK.	JPL	DATE	01-27-12

River Valley Engineering, Inc.
(479) 410-2268
Fax: (479) 410-2440
111 North Plaza CL
Van Buren, AR 72956

Maguire Iron, Inc.
GENERAL CONTRACTOR
SIOUX FALLS, SOUTH DAKOTA

BASE PLATE
250,000 GALLON SPHEROID
SAGINAW, MICHIGAN

R/E DWG. FILE NAME	C:\MAGUIRE\SHOP\2011-393
SHEET OF	R/E PROJECT NO. 2011-393
DRAWING NO.	2011-393 /250-1

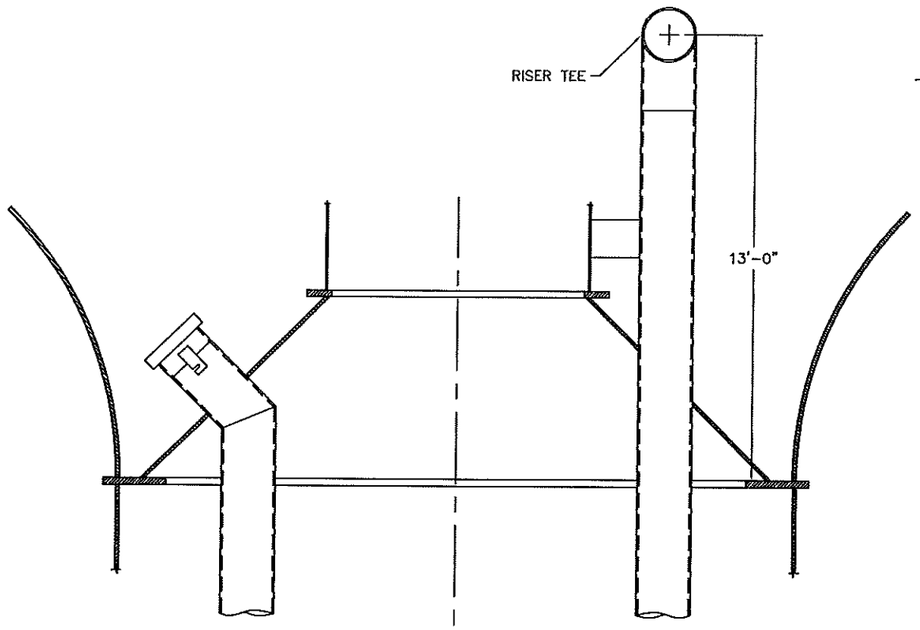

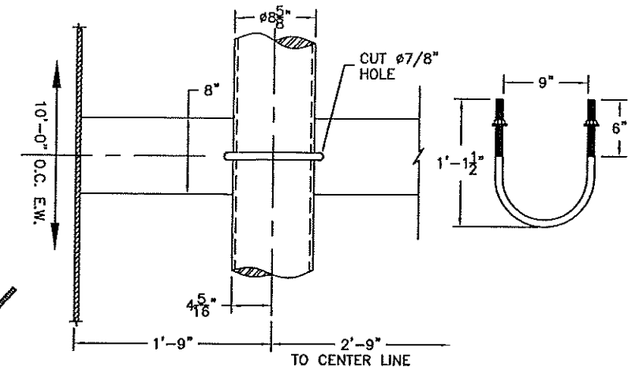

Zinc Riser Pipe Brackets
(18) SETS OF 3/4" dia. HR all thread with NUTS & WASHERS
Mount to Channels @ 10'-0" O.C.

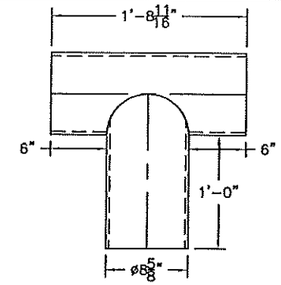

RISER INLET TEE
(1) THUS
ORIENTATE PERPENDICULAR
WITH DRYWELL.

SHOPWELD TYP.
(3) BARS 2"x1/4"x10" LG.
SPACED EQ. @ 2 1/2" C.C.

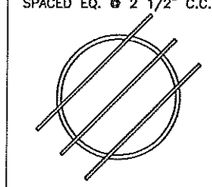

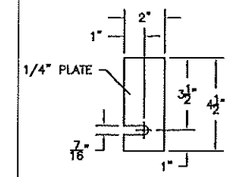

(2) BARS THUS
BOLT TO RISER TOP
W/ 3/8"x1 1/2" SS BOLTS
AND WING NUTS.

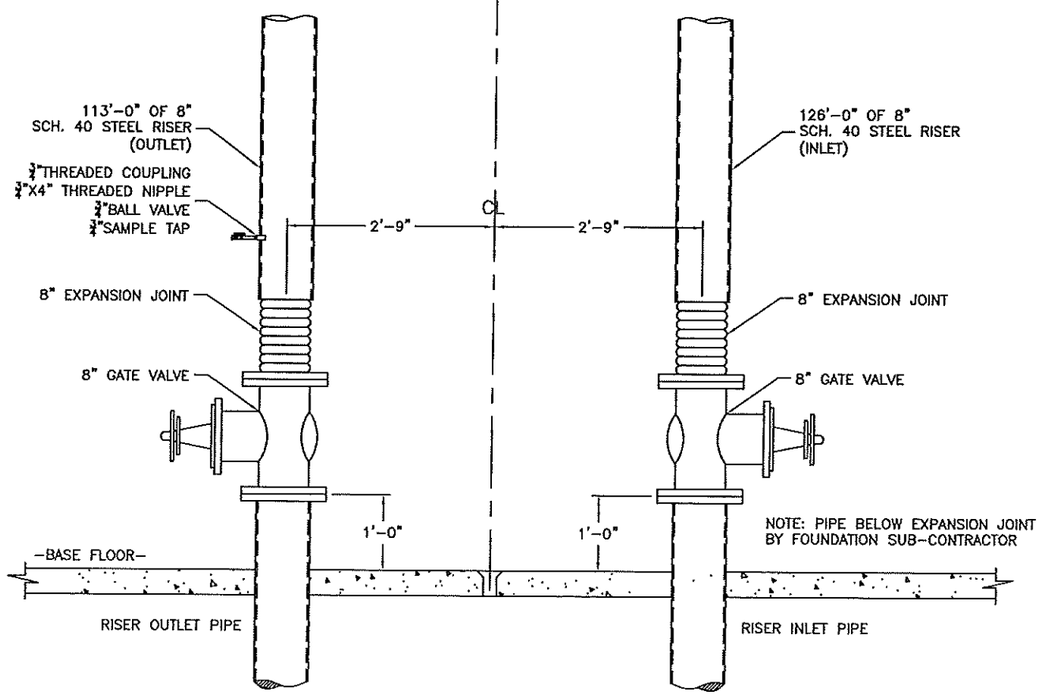

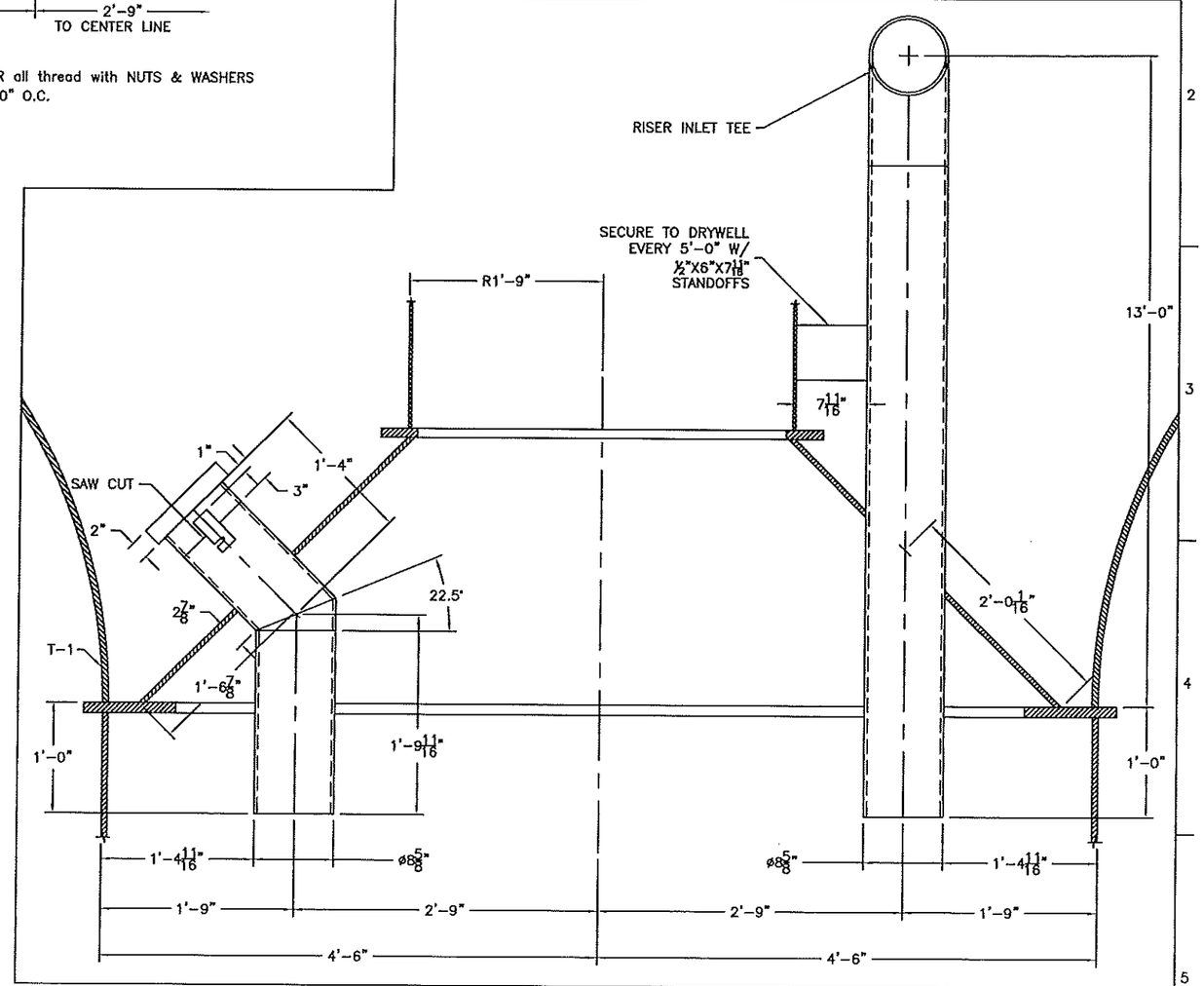

MAGUIRE IRON, INC.

PROJECT NAME: SAGINAW, MI			
DRAWING NAME: 8" DOUBLE RISER DETAILS			
SIZE: 250MG	DATE: 1/25/12	DWG NO. 0	REV: 0
SCALE: VARIES	AUTHOR: DBE	SHEET: 250-2	

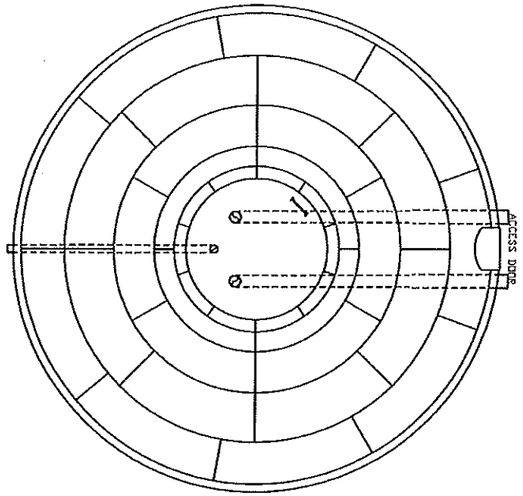

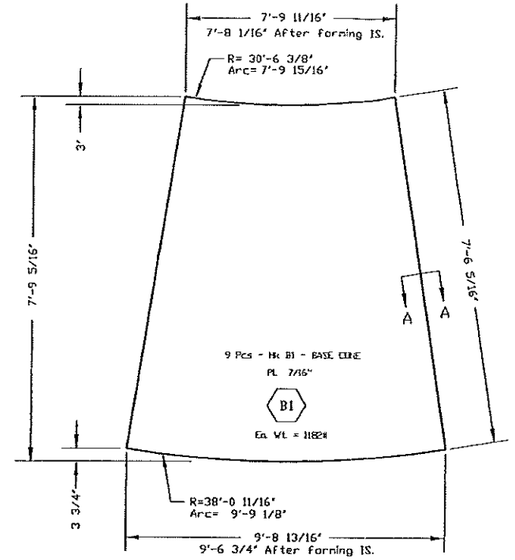

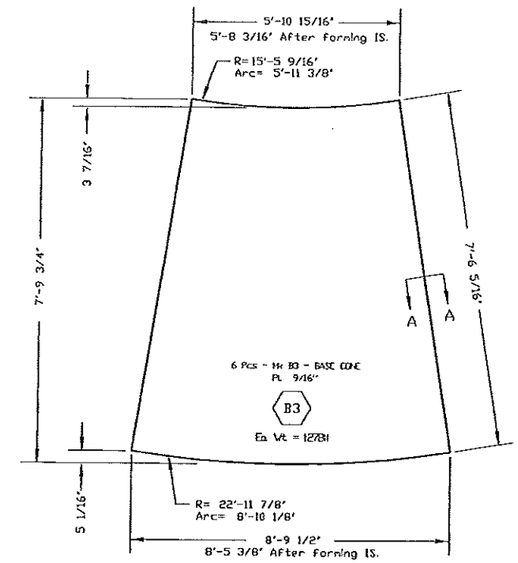

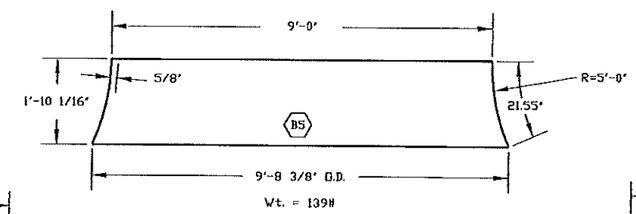

BASE CONE STEEL (A-36)

PL 7/16' (9=B-1)
PL 7/16' (8=B-2)
PL 9/16' (6=B-3)
PL 5/8' (4=B-4)
PL 5/8' (10=B-5)

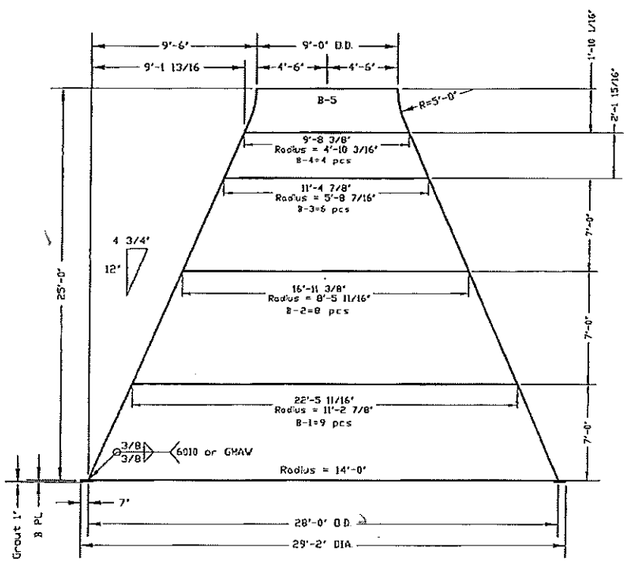

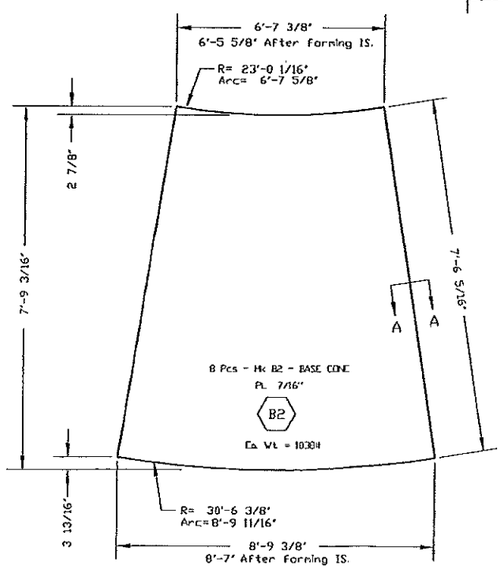

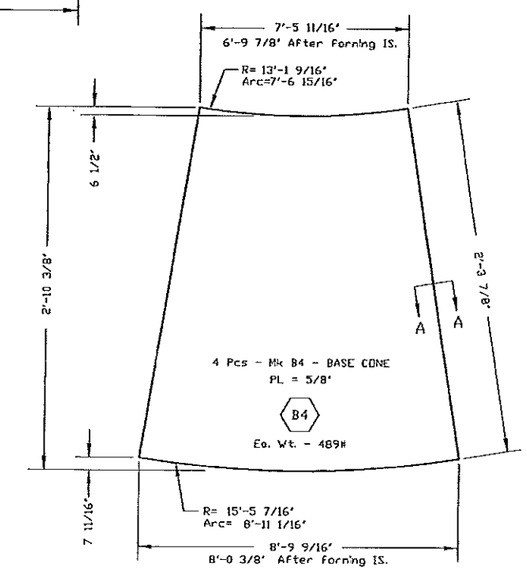

I HEREBY CERTIFY THAT THIS PLAN, SPECIFICATION OR REPORT WAS PREPARED BY ME OR UNDER MY DIRECT SUPERVISION AND THAT I AM A DULY REGISTERED PROFESSIONAL ENGINEER UNDER THE LAWS OF THE STATE OF MICHIGAN

DATE: _____ REG NO.: _____

NO	DATE	DR. BY	CK. BY	DESCRIPTION

SCALE	NONE		
DR.	DAS	DATE	01-27-12
CK.	JPL	DATE	01-27-12

River Valley Engineering, Inc.
(479) 410-2208
Fax: (479) 410-2440
111 North Plaza CL
Van Buren, AR 72956

Maguire Iron, Inc.
GENERAL CONTRACTOR
SIOUX FALLS, SOUTH DAKOTA

BASE CONE DETAILS
250,000 GALLON SPHEROID
SAGINAW, MICHIGAN

RVE DWG. FILE NAME: C:\MAGUIRE\SHOP\2011-393
SHEET OF
RVE PROJECT NO. 2011-393
DRAWING NO. 2011-393 /250-3

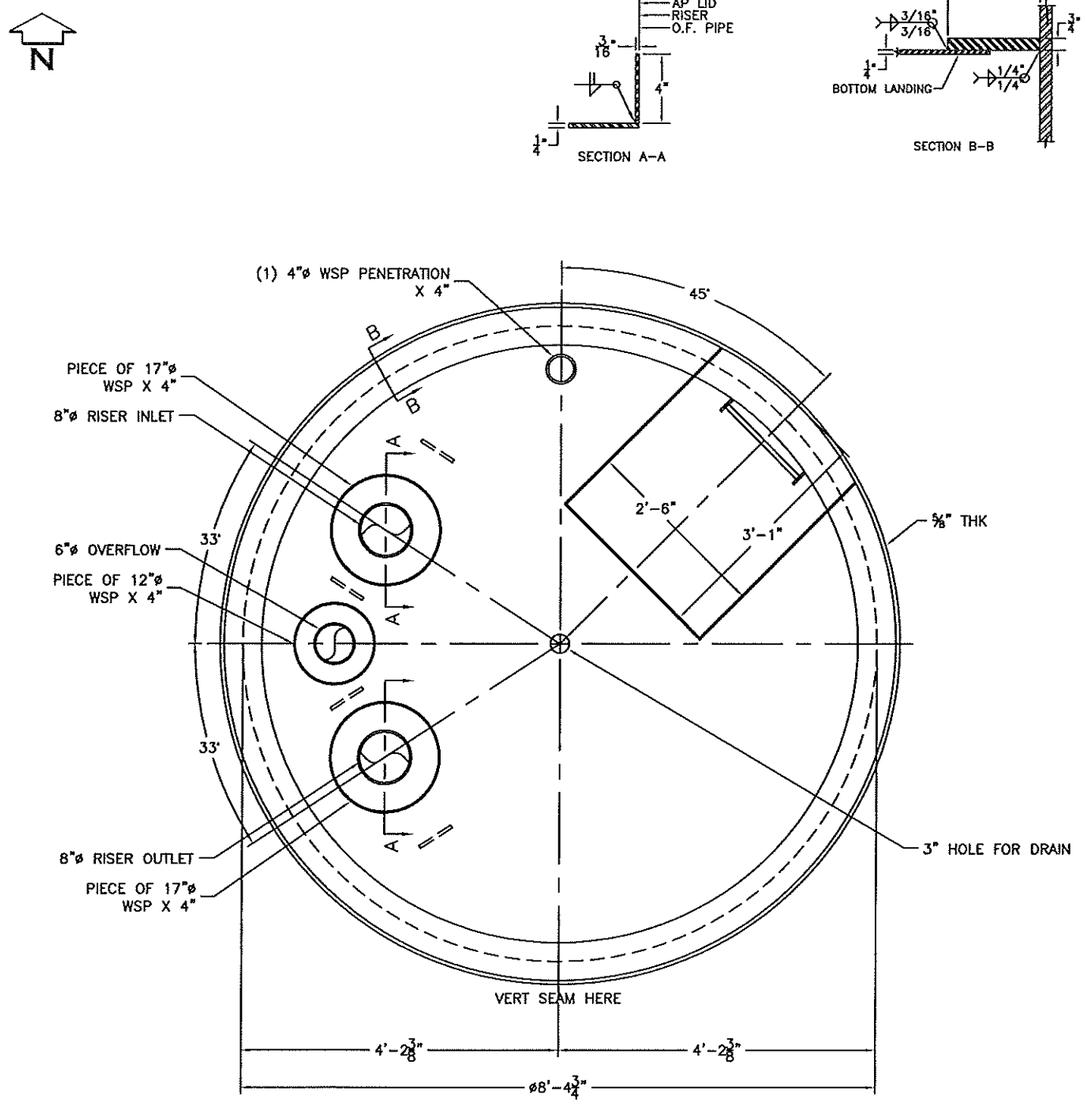

VIEW LOOKING DOWN
ONE ~ BOTTOM LANDING ~ THUS
APPROX. WT. 560# W/O CUTOUTS

ITEM	RADIUS
OVERFLOW =	2'-11 3/4"
RISER =	2'-9"

SCALE: 1/2"=1'-0"

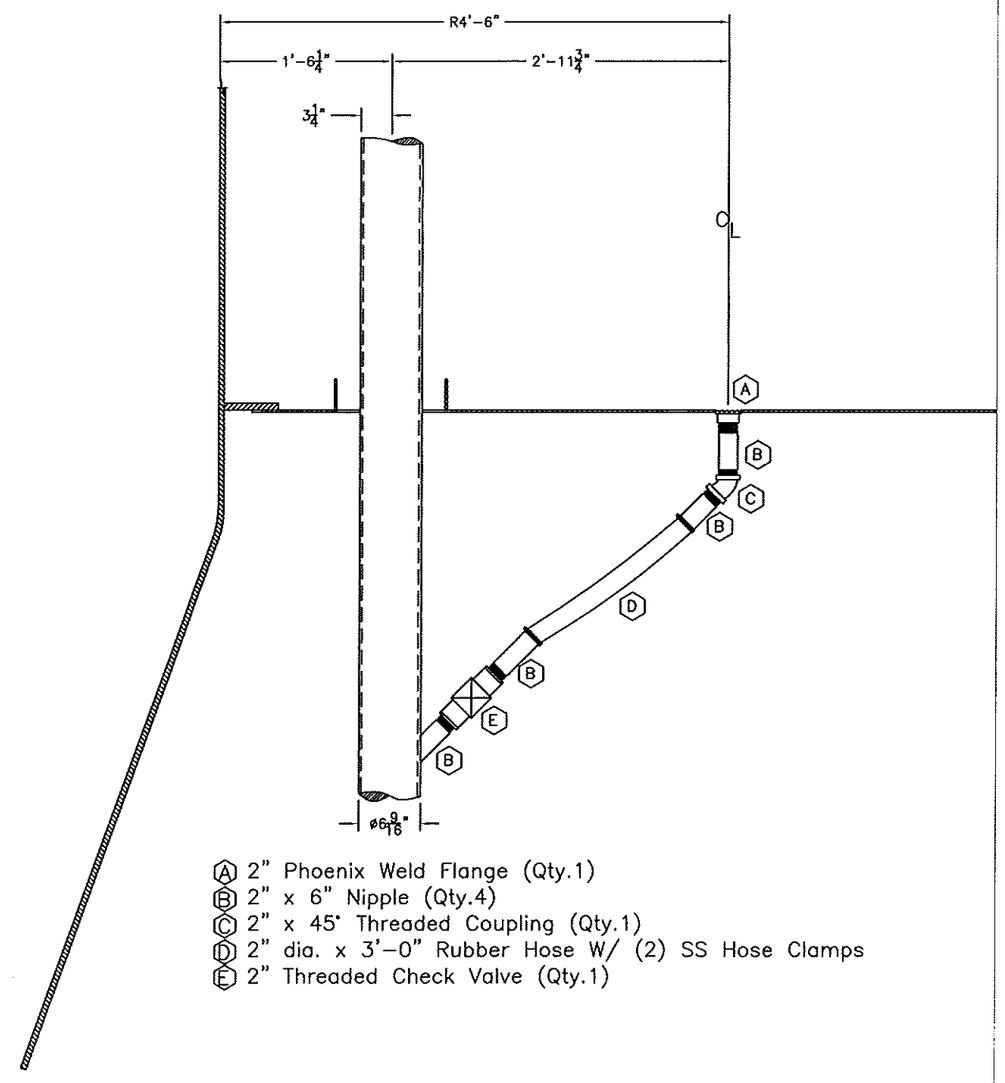

Ⓐ 2" Phoenix Weld Flange (Qty.1)
Ⓑ 2" x 6" Nipple (Qty.4)
Ⓒ 2" x 45° Threaded Coupling (Qty.1)
Ⓓ 2" dia. x 3'-0" Rubber Hose W/ (2) SS Hose Clamps
Ⓔ 2" Threaded Check Valve (Qty.1)

SCALE: 3/4"=1'-0"

MAGUIRE IRON, INC.

PROJECT NAME: SAGINAW, MI			
DRAWING NAME: BOTTOM LANDING AND DRAIN ASSEMBLY			
SIZE: 250MG	DATE: 1/25/12	DWG NO. 0	REV: 0
SCALE: VARIES	AUTHOR: DBE	SHEET: 250-4	

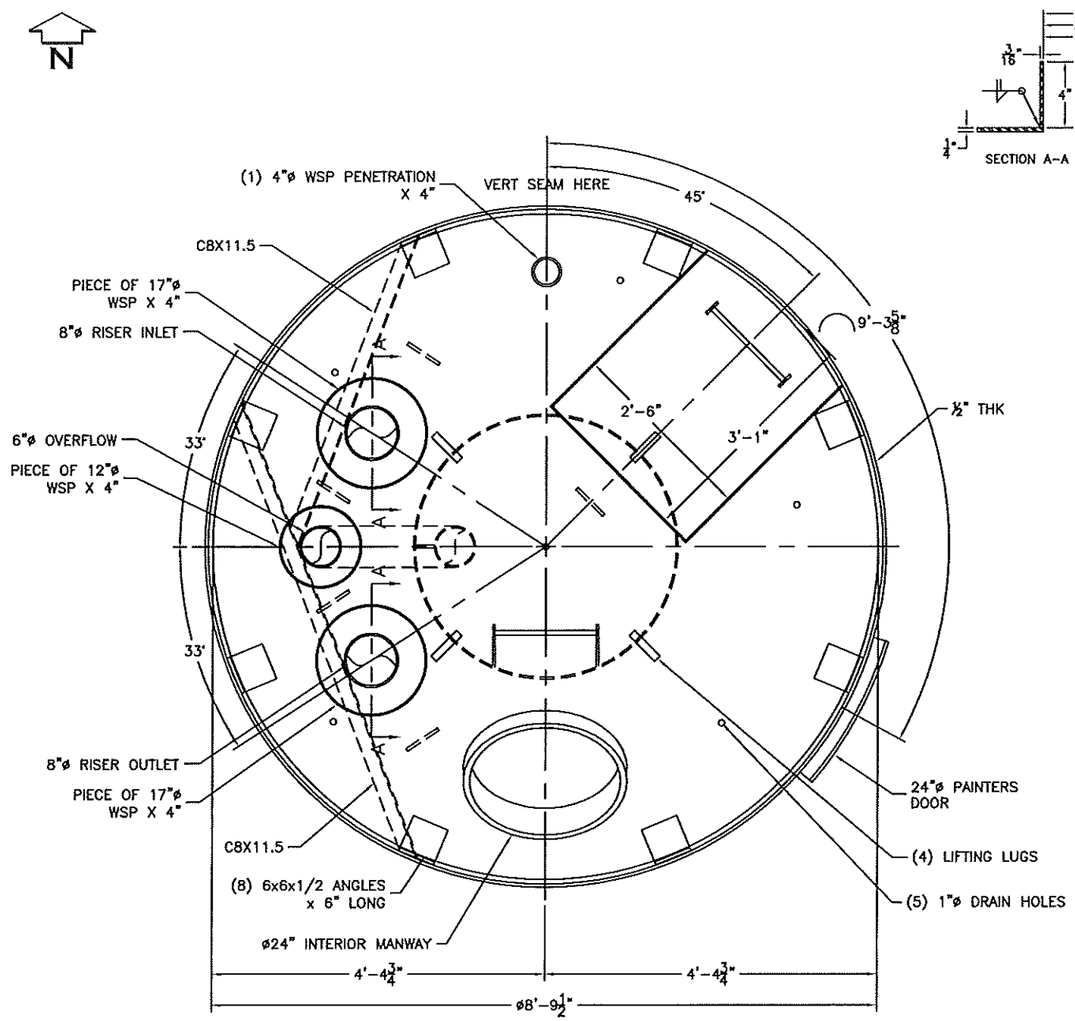

VIEW LOOKING DOWN
ONE ~ TOP LANDING ~ THUS
APPROX. WT. 560# W/O CUTOUTS

ITEM	RADIUS
OVERFLOW =	2'-11¾"
RISER =	2'-9"

NOTE: WELD (2) PADEYES UNDERSIDE OF LANDING 1'-0" ON EACH SIDE OF RISER FOR PAINTERS RIGGING

SCALE: 1/2"=1'-0"

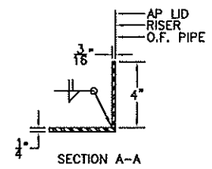

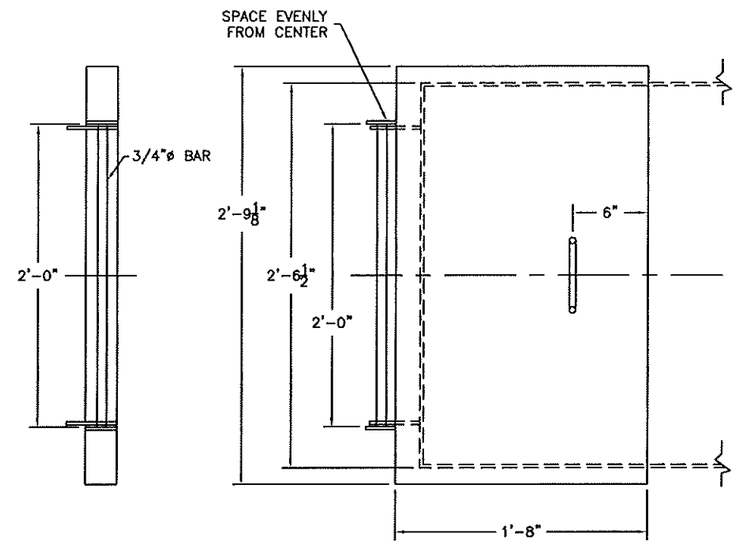

NOTE: (2) THUS

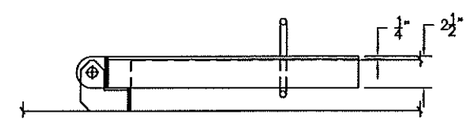

SCALE: 1"=1'-0"

30" COLUMN MANWAY COMPONENT DETAILS

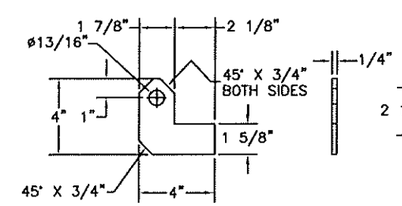

WELD TO FRAME (2 EACH)

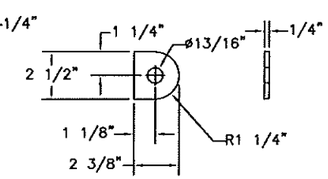

WELD TO COVER (2 EACH)

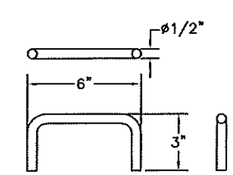

HANDLE (2 EACH)
(½"ø BAR)

SCALE: 1.5"=1'-0"

MAGUIRE IRON, INC.

PROJECT NAME: SAGINAW, MI			
DRAWING NAME: TOP LANDING AND COLUMN MANWAY			
SIZE: 250MG	DATE: 1/25/12	DWG NO. 0	REV: 0
SCALE: VARIES	AUTHOR: DBE	SHEET: 250-5	

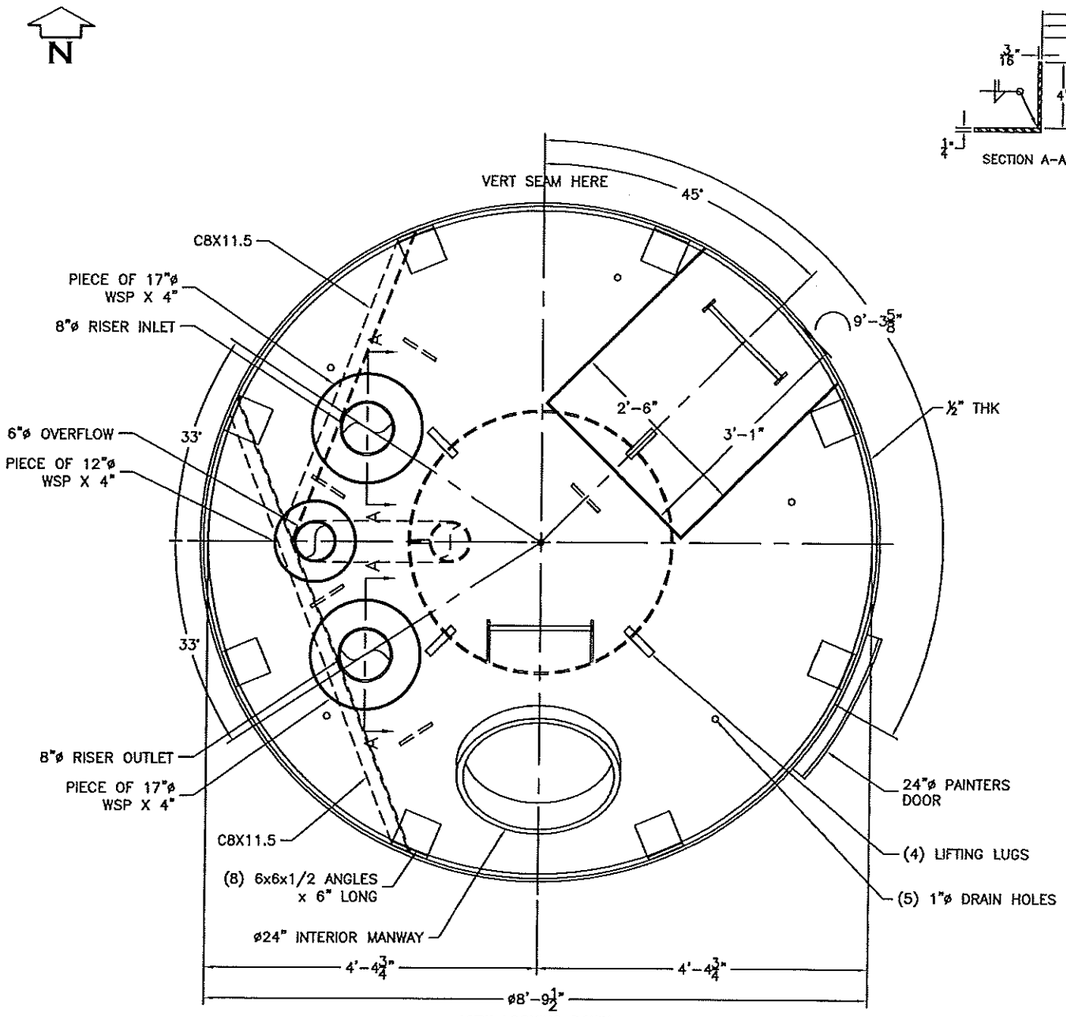

VIEW LOOKING DOWN
ONE ~ TOP LANDING ~ THUS
APPROX. WT. 560# W/O CUTOUTS

ITEM	RADIUS
OVERFLOW =	2'-11 3/4"
RISER =	2'-9"

NOTE: WELD (2) PADEYES UNDERSIDE OF LANDING 1'-0" ON EACH SIDE OF RISER FOR PAINTERS RIGGING

SCALE: 1/2"=1'-0"

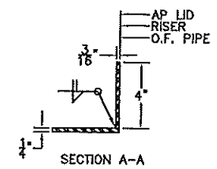

SECTION A-A

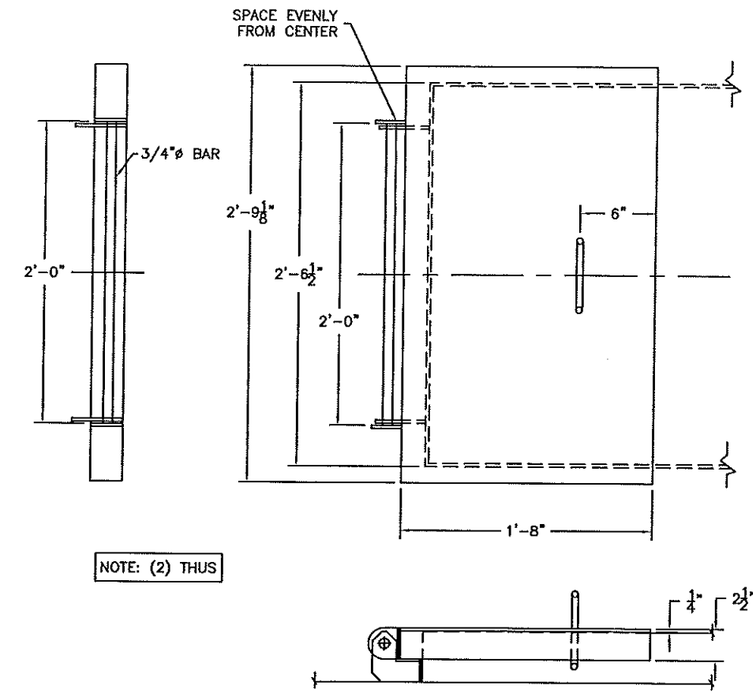

NOTE: (2) THUS

SCALE: 1"=1'-0"

30" COLUMN MANWAY COMPONENT DETAILS

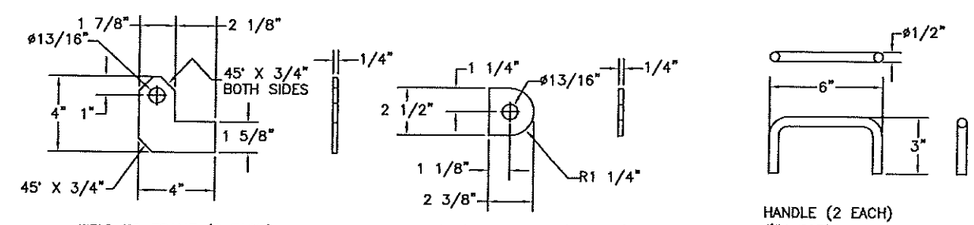

WELD TO FRAME (2 EACH)

WELD TO COVER (2 EACH)

HANDLE (2 EACH)
(1/2"ø BAR)

SCALE: 1.5"=1'-0"

MAGUIRE IRON, INC.

PROJECT NAME: SAGINAW, MI			
DRAWING NAME: TOP LANDING AND COLUMN MANWAY			
SIZE: 250MG	DATE: 1/25/12	DWG NO. 0	REV: 0
SCALE: VARIES	AUTHOR: DBE	SHEET: 250-5	

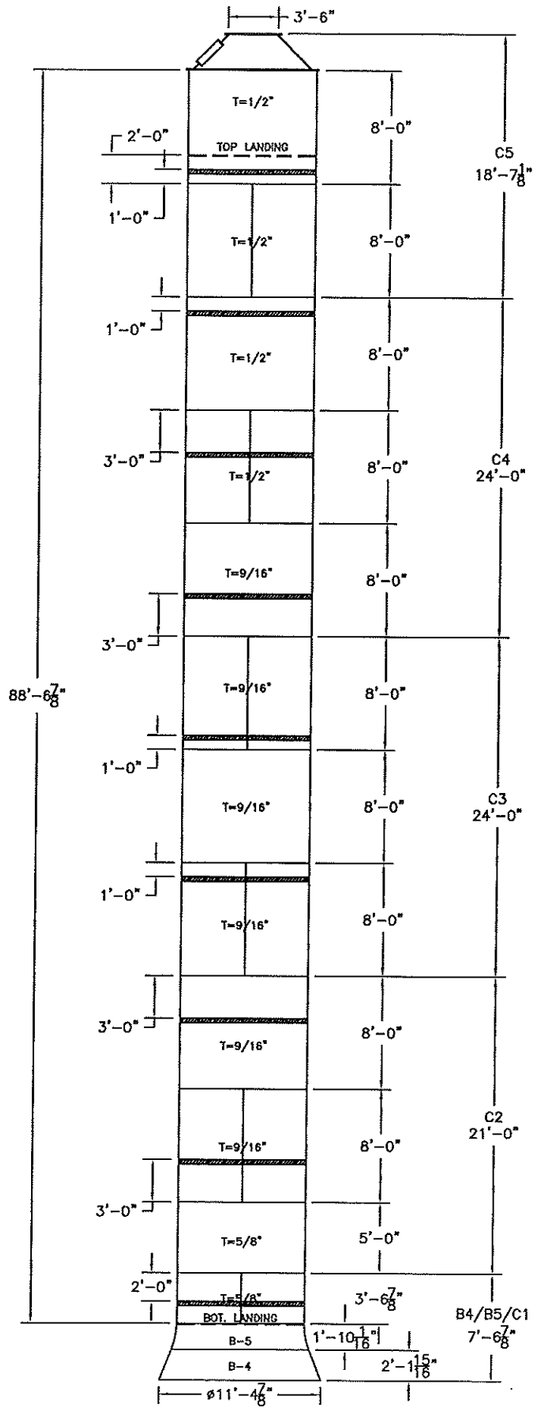

SCALE: 3/32"=1'-0"

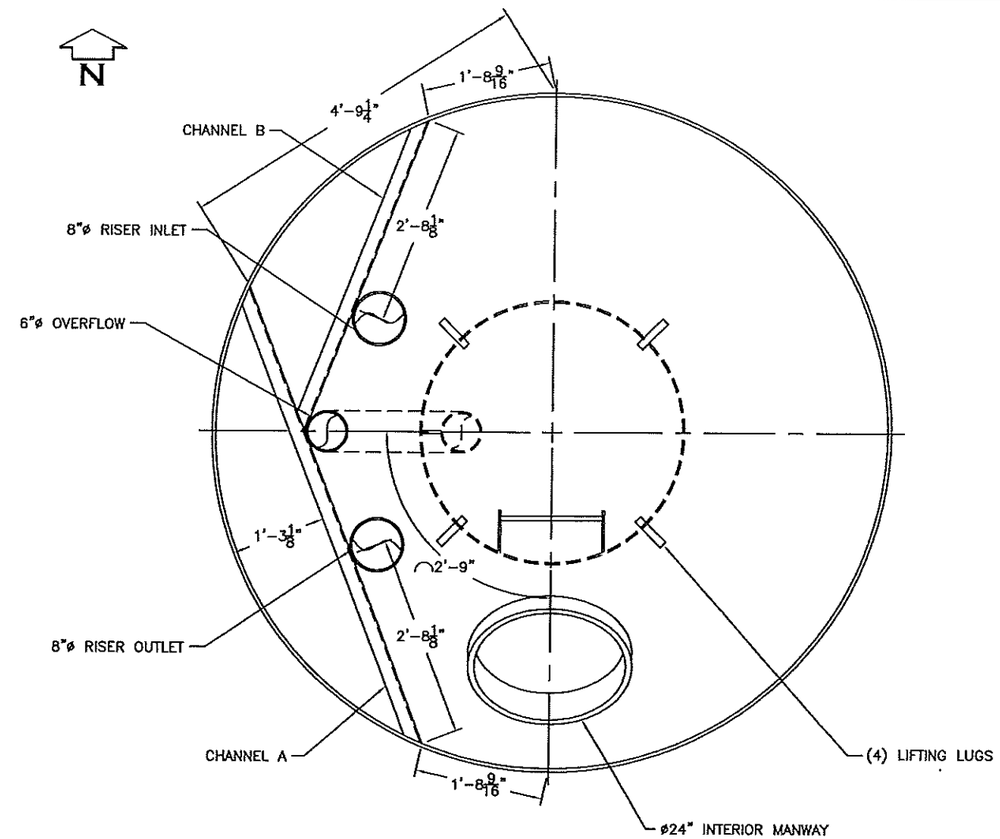

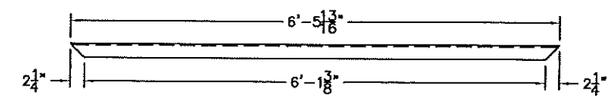

CHANNEL A
INSTALL C8x11.5 CHANNELS AT 10'-0" VERTICAL
SPACING (9) THUS

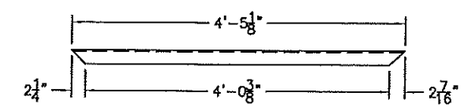

CHANNEL B
INSTALL C8x11.5 CHANNELS AT 10'-0" VERTICAL
SPACING (9) THUS

ITEM	RADIUS
OVERFLOW =	2'-1 13/16"
RISER =	2'-9"

MAGUIRE IRON, INC.

PROJECT NAME: SAGINAW, MI			
DRAWING NAME: 9'-0" COLUMN LAYOUT & CHANNEL SUPPORTS			
SIZE: 250MG	DATE: 1/25/12	DWG NO. 0	REV: 0
SCALE: VARIES	AUTHOR: DBE	SHEET: 250-6	

Note: *
For Total Correct
Column Length
Adjust this
Dimension

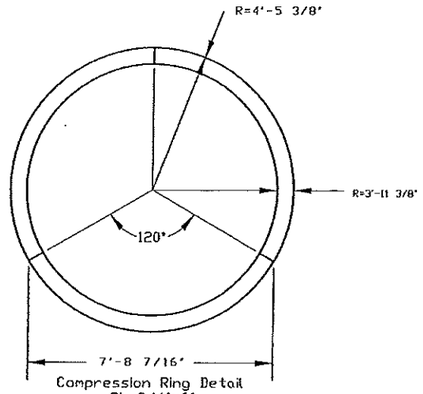

Compression Ring Detail
PL 3/4"x6"

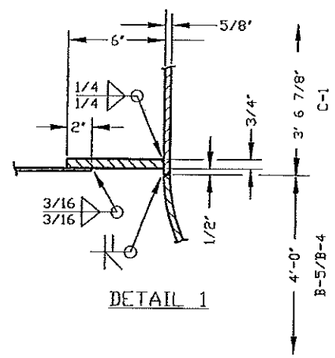

DETAIL 1

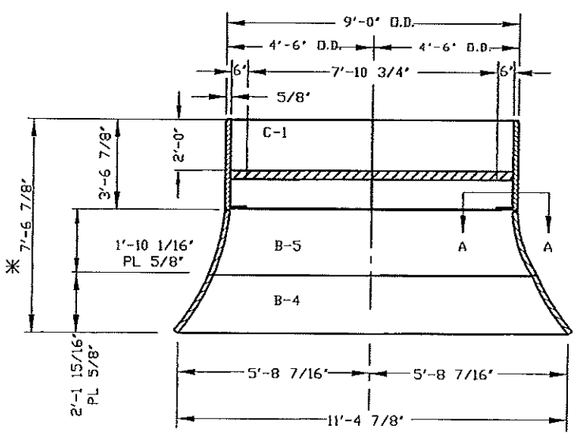

ONE ~ BASE CONE B-4/B-5/C-1 ~ THUS

WT.=6,830#

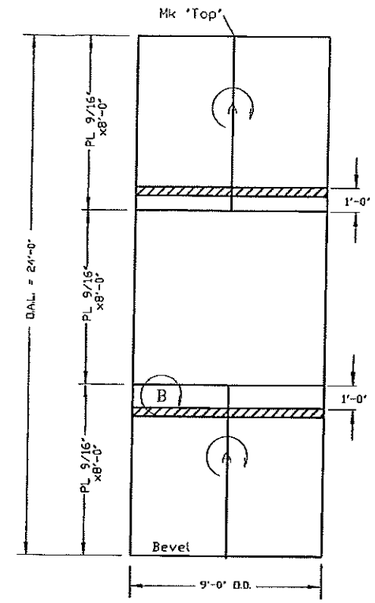

Mk C-3
1 ~ COLUMN THUS
Wt.=15,813#

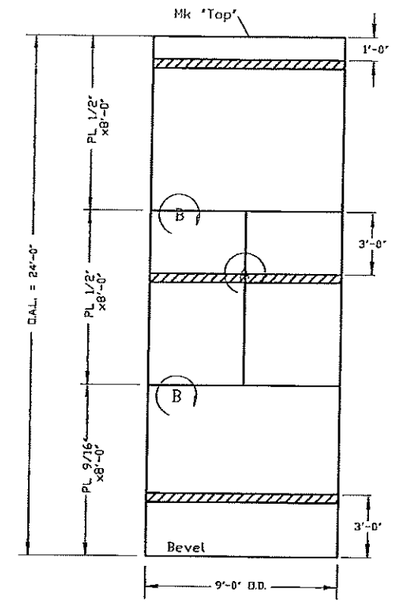

Mk C-4
1 ~ COLUMN THUS
Wt.=14,779#

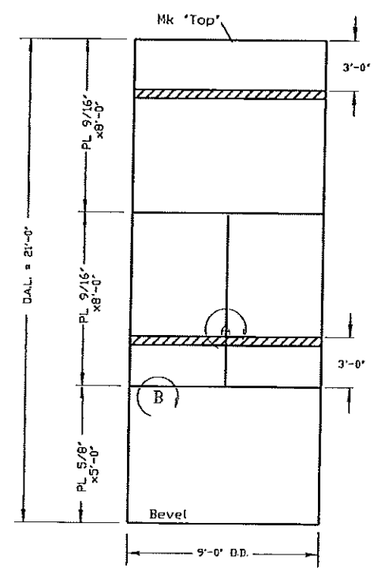

Mk C-2
1 ~ COLUMN THUS
Wt.=14,227#

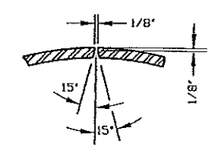

DETAIL "A-A"
Note: Bevel on Inside Surface
for Vertical Weld

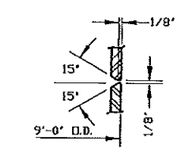

DETAIL "B-B"
Note: Bevel on Inside Surface
for Horizontal Weld

I HEREBY CERTIFY THAT THIS PLAN, SPECIFICATION OR REPORT WAS PREPARED BY ME OR UNDER MY DIRECT SUPERVISION AND THAT I AM A DULY REGISTERED PROFESSIONAL ENGINEER UNDER THE LAWS OF THE STATE OF MICHIGAN

DATE:_____ REG.NO.:_____

NO	DATE	DR. BY	CK. BY	DESCRIPTION

SCALE NONE	
DR. DAS	DATE 01-27-12
CK. JPL	DATE 01-27-12

River Valley Engineering, Inc.
(479) 410-2208 Fax: (479) 410-2440
111 North Plaza CL
Van Buren, AR 72956

Maguire Iron, Inc.
GENERAL CONTRACTOR
SIOUX FALLS, SOUTH DAKOTA

9'-0" COLUMN LAYOUTS
250,000 GALLON SPHEROID
SAGINAW, MICHIGAN

M/E DWG. FILE NAME: C:\MAGUIRE\SHOP\2011-393
SHEET OF
M/E PROJECT NO. 2011-393
DRAWING NO 2011-393 /250-7

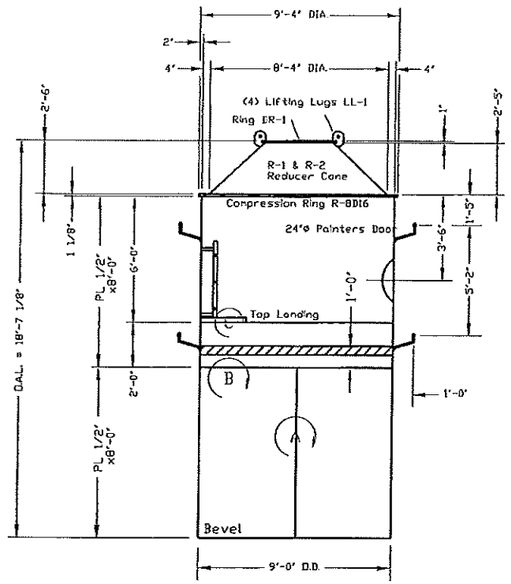

Mk C-5
ONE ~ COLUMN UNIT ~ THUS
Wt. = 13,398#

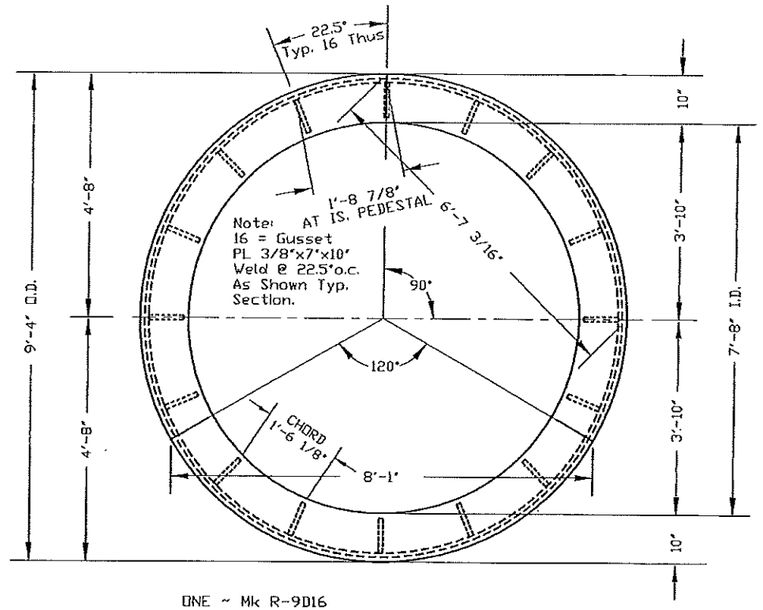

ONE ~ Mk R-9D16
COLUMN TOP COMPR. RING THUS
Wt. Including Gusset Plates= 1107#

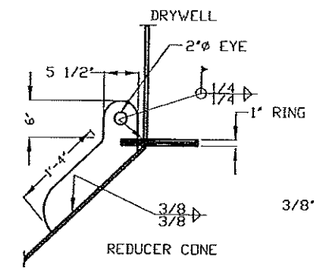

DETAIL 3
(4) REDUCER CONE LIFTING LUGS
(1 1/4" PLATE)
(SEE 250- FOR ORIENTATION)

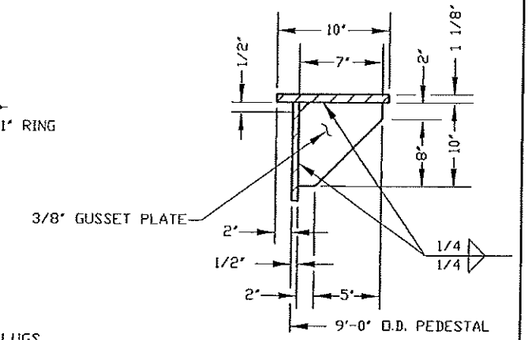

TYP. SECTION

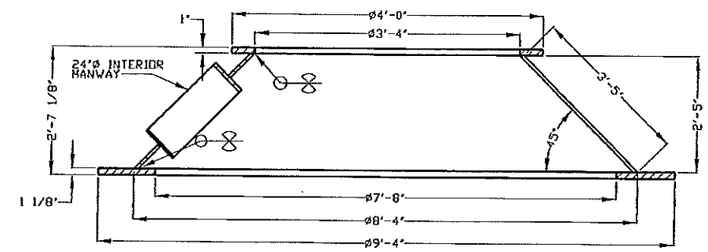

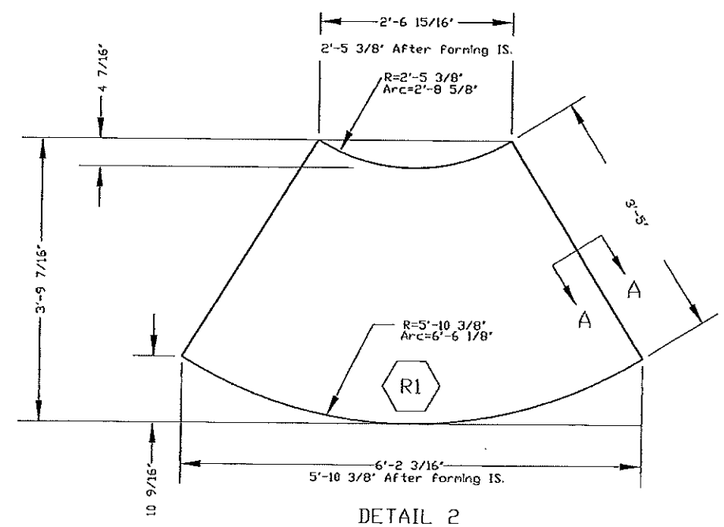

DETAIL 2
4 Pcs ~ Mk R1 ~ REDUCER CONE
PL 1/2"
Ea. Wt.= 322#

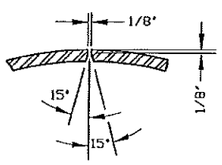

DETAIL 'A-A'
Note: Bevel on Inside Surface
For Vertical Weld

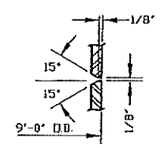

DETAIL 'B-B'
Note: Bevel on Inside Surface
For Horizontal Weld

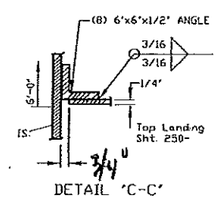

DETAIL 'C-C'

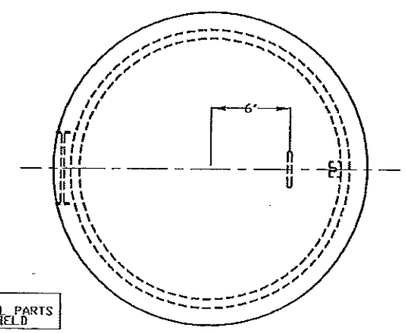

NOTE:
SHIP WITH SMALL PARTS
AND MOUNT IN FIELD

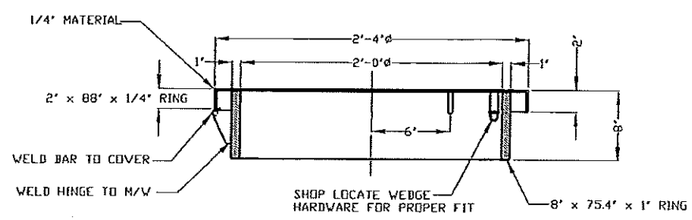

24"ø PAINTER'S DOOR DETAIL

I HEREBY CERTIFY THAT THIS WORK SPECIFICATION OR REPORT WAS PREPARED BY ME OR UNDER MY DIRECT SUPERVISION AND THAT I AM A DULY REGISTERED PROFESSIONAL ENGINEER UNDER THE LAWS OF THE STATE OF MICHIGAN

DATE: _____ REG. NO.: _____

NO.	DATE	DR. BY	CK. BY	DESCRIPTION

SCALE	NONE
DR. DAS	DATE 01-27-12
CK. JPL	DATE 01-27-12

River Valley Engineering, Inc.
(479) 410-2208 Fax: (479) 410-2410
113 North Pierce St. Van Buren, AR 72956

Maguire Iron, Inc.
GENERAL CONTRACTOR
SIOUX FALLS, SOUTH DAKOTA

9'-0" TOP COLUMN LAYOUTS
250,000 GALLON SPHEROID
SAGINAW, MICHIGAN

R/E DWG. FILE NAME	C:\MAGUIRE\SHOP\2011-393
SHEET 0F	R/E PROJECT NO. 2011-393
DRAWING NO.	2011-393 / 250-8

42" DRYWELL

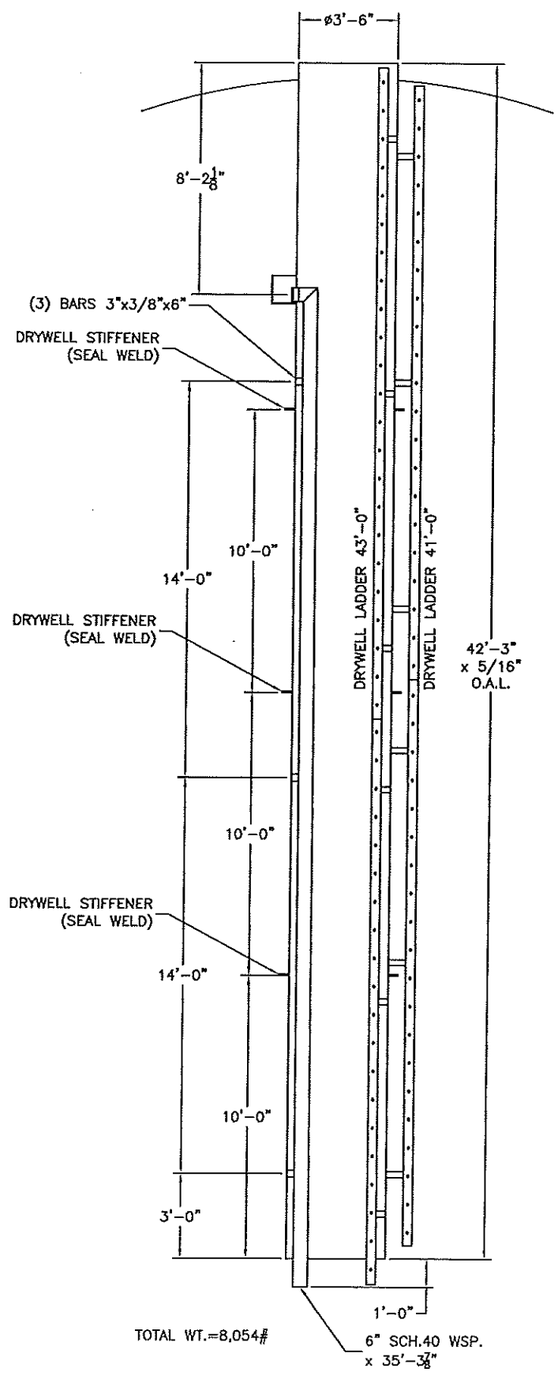

TOTAL WT.=8,054#

SCALE: 3/16" = 1'-0"

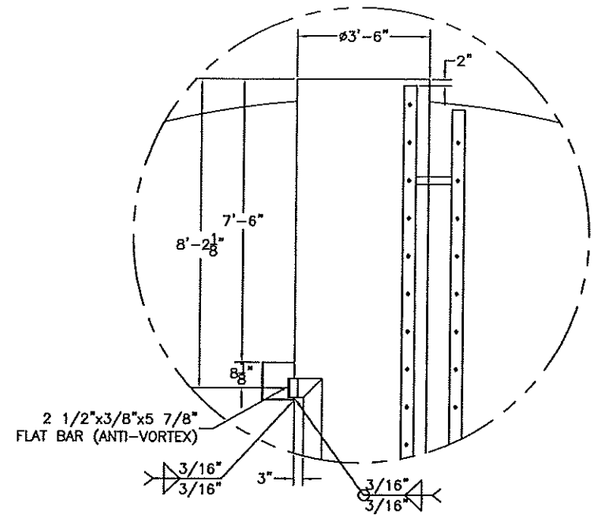

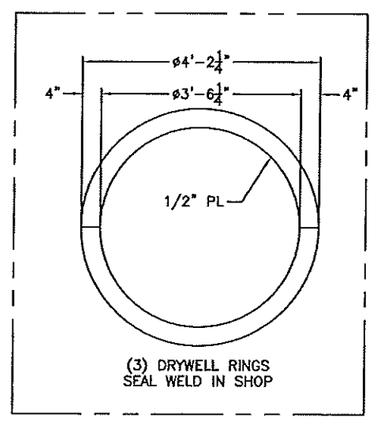

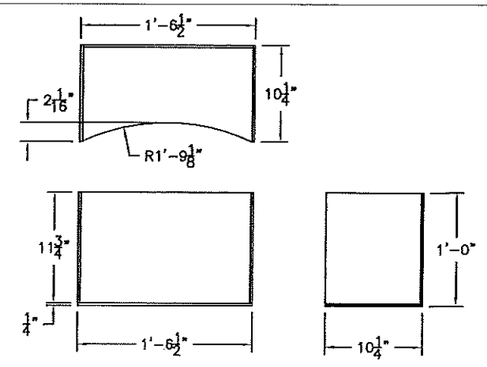

WEIR BOX DETAIL:
BOTTOM: (1 PC) 10 1/4" x 18 1/2" x 1/4"
SIDES: (2 PCS) 10 1/4" x 11 3/4" x 1/4"
FRONT: (1 PC) 11 3/4" x 18" x 1/4"

24" INTERIOR MANWAY
(SEE SHEET 250-6 FOR ORIENTATION)

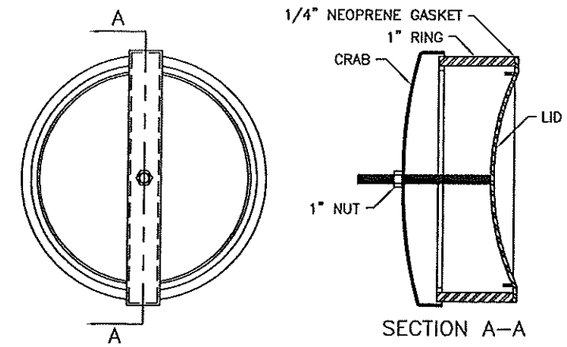

SECTION A-A

(1) RING

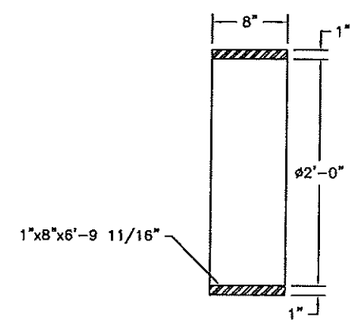

(1) LID

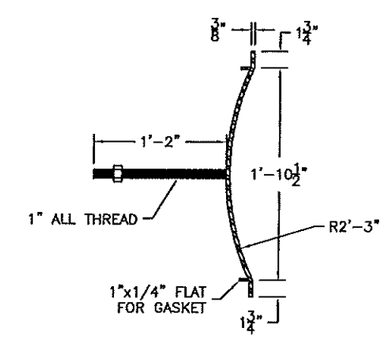

SCALE: 3/4" = 1'-0"

(1) CRAB

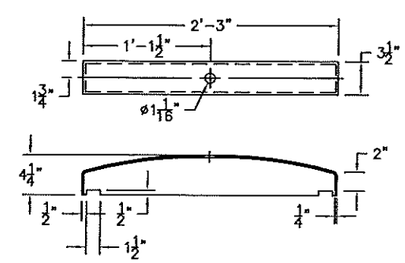

NOTE: SHIP 1/4" GASKET SECURED IN PLACE BY 1"x1/4" FLAT

MAGUIRE IRON, INC.

PROJECT NAME: SAGINAW, MI			
DRAWING NAME: 42" DRYWELL AND ACCESSORIES			
SIZE: 250MG	DATE: 1/25/12	DWG NO. 0	REV: 0
SCALE: VARIES	AUTHOR: DBE	SHEET: 250-9	

INSIDE DRYWELL LADDERS

NOTE: SHOP WELD LADDER INSIDE TOP OF DRYWELL

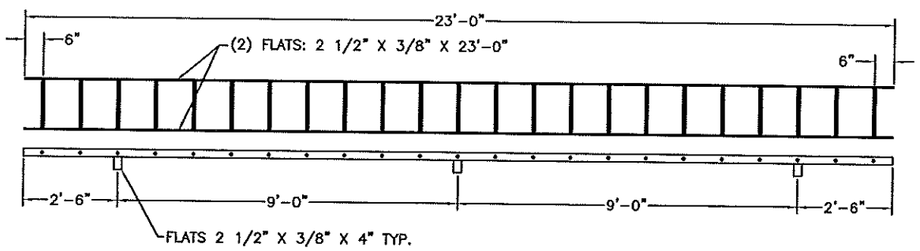

NOTE: SHOP WELD LADDER INSIDE BOTTOM OF DRYWELL

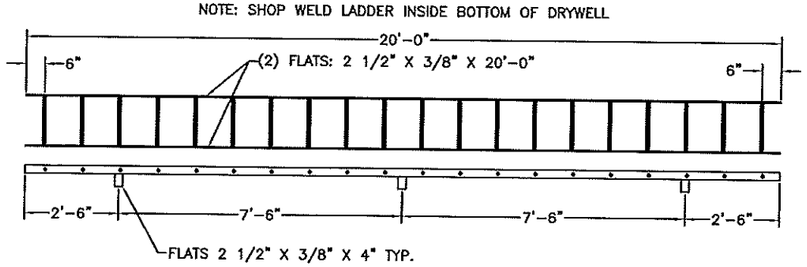

OUTSIDE DRYWELL LADDERS

NOTE: FIELD WELD LADDER OUTSIDE TOP OF DRYWELL

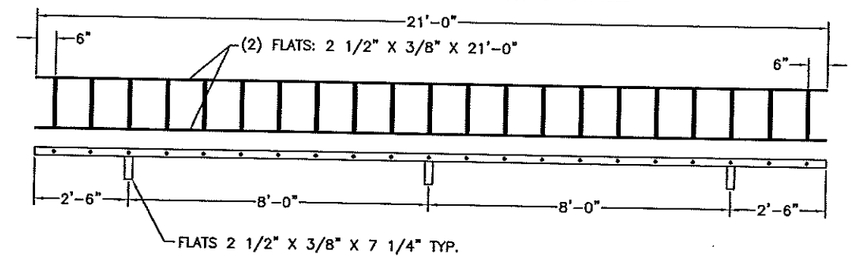

NOTE: FIELD WELD LADDER OUTSIDE BOTTOM OF DRYWELL

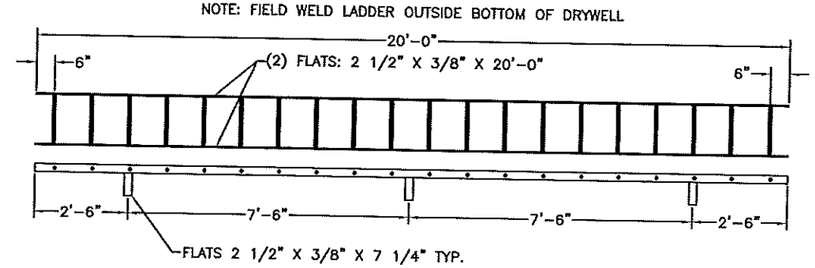

LADDER TOP VIEW

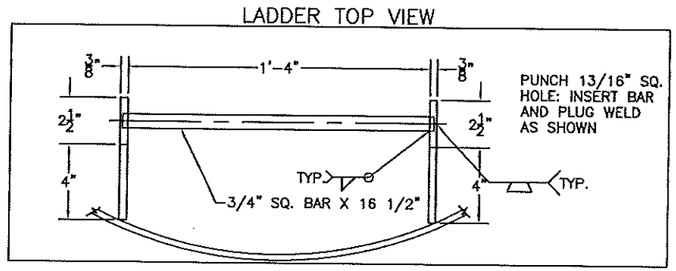

LADDER TOP VIEW

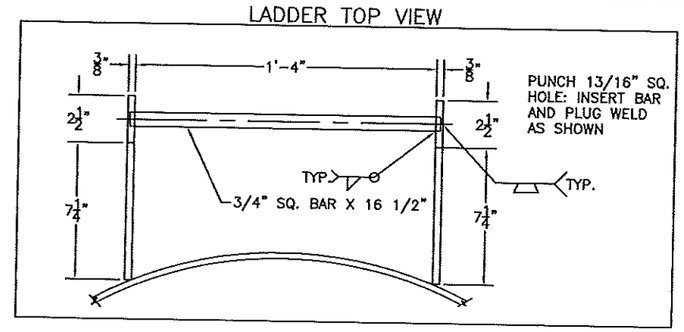

MAGUIRE IRON, INC.

PROJECT NAME: SAGINAW, MI			
DRAWING NAME: DRYWELL LADDERS			
SIZE: 250MG	DATE: 1/25/12	DWG NO. 0	REV: 0
SCALE: 1/4" = 1'-0"	AUTHOR: DBE		SHEET: 250-10

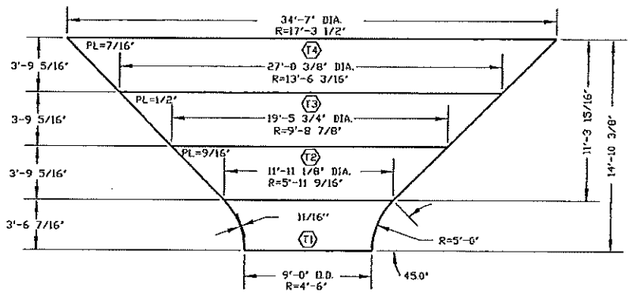

Note: TI-16 SEGMENTS FABRICATE W/T2 AND SHIP IN HALVES

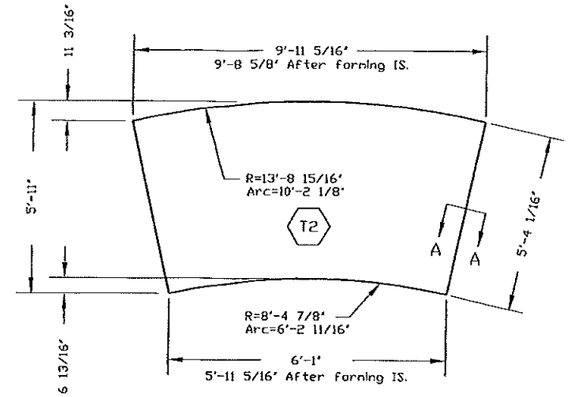

6 Pcs ~ Mk T2 ~ UPPER CONE
PL 9/16"
Ea. Wt.= 1004#

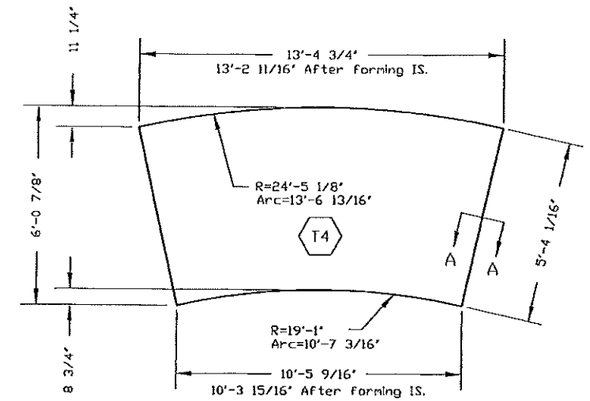

8 Pcs ~ Mk T4 ~ UPPER CONE
PL 7/16"

Ea. Wt.= 1152#

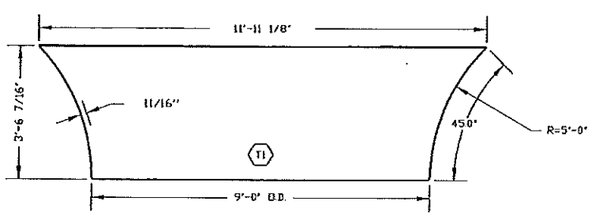

16 Pcs - MK T1 - UPPER CONE
PL - 11/16"
Estimated Wt = 3488#

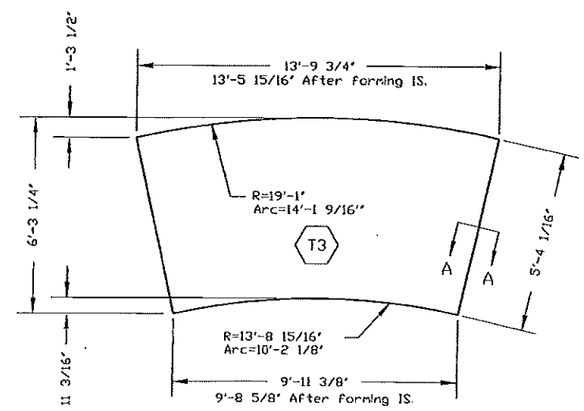

6 Pcs ~ Mk T3 ~ UPPER CONE
PL 1/2"
Ea. Wt.= 1324#

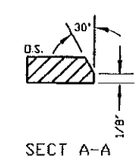

SECT A-A

I HEREBY CERTIFY THAT THIS PLAN, SPECIFICATION OR REPORT WAS PREPARED BY ME OR UNDER MY DIRECT SUPERVISION AND THAT I AM A DULY REGISTERED PROFESSIONAL ENGINEER UNDER THE LAWS OF THE STATE OF MICHIGAN

DATE:_____ REG NO.:_____

NO.	DATE	DR. BY	CK. BY	DESCRIPTION

SCALE	NONE	
DR.	DAS	DATE 01-27-12
CK.	JPL	DATE 01-27-12

River Valley Engineering, Inc.
(479) 410-2208
Fax: (479) 410-2440
111 North Plaza Ct.
Van Buren, AR 72956

Maguire Iron, Inc.
GENERAL CONTRACTOR
SIOUX FALLS, SOUTH DAKOTA

UPPER CONE DETAILS
250,000 GALLON SPHEROID
SAGINAW, MICHIGAN

RVE DWG. FILE NAME C:\MAGUIRE\SHOP\2011-393
SHEET 01
RVE PROJECT NO. 2011-393
DRAWING NO 2011-393 /250-11

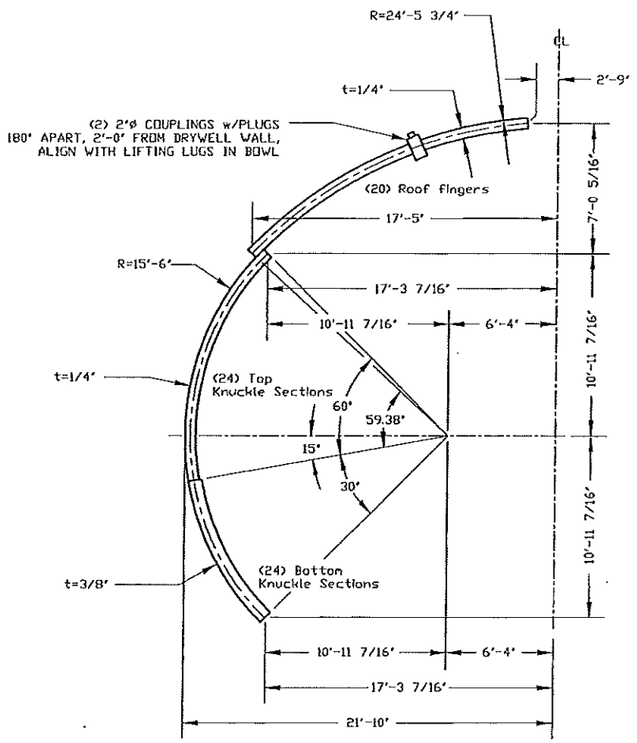

TANK PLACING GEOMETRY

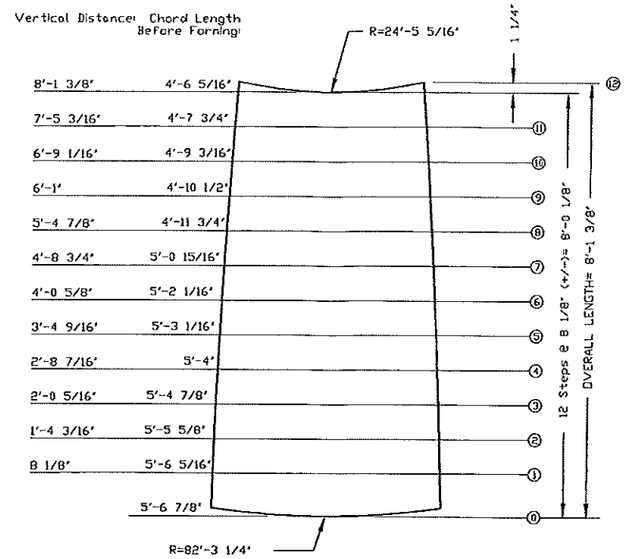

Wt Ea. Plate ~ 639#

BOTTOM KNUCKLE DETAILS - 2 of 2
24 Pieces thus

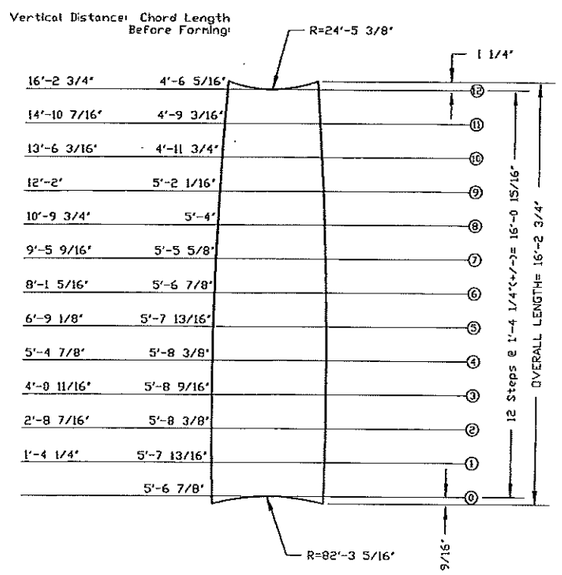

Wt Ea. Plate ~ 896#

TOP KNUCKLE DETAILS - 2 of 2
24 PCS THUS

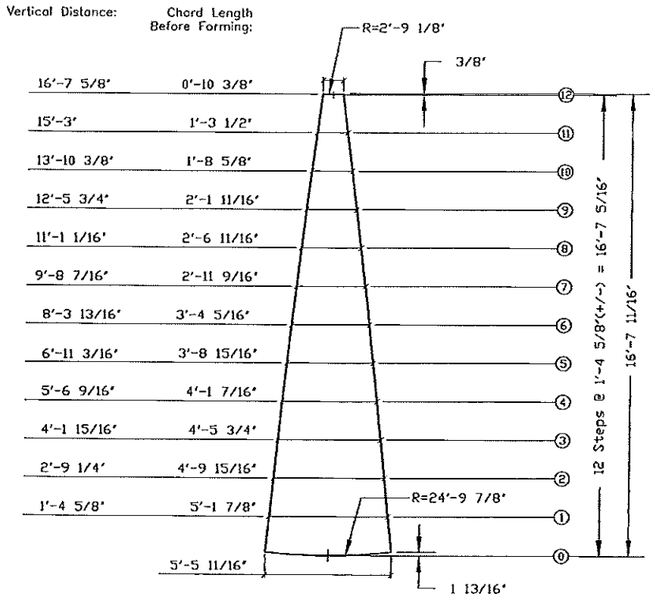

Wt Ea. Plate ~ 567#

ROOF FINGER DETAILS - 2 of 2
20 Pieces Thus

I HEREBY CERTIFY THAT THIS PLAN, SPECIFICATION OR REPORT WAS PREPARED BY ME OR UNDER MY DIRECT SUPERVISION AND THAT I AM A DULY REGISTERED PROFESSIONAL ENGINEER UNDER THE LAWS OF THE STATE OF MICHIGAN

DATE _____ REGNO. _____

NO.	DATE	DR. BY	CK. BY	DESCRIPTION

SCALE NONE	
DR. DAS	DATE 01-27-12
CK. JPL	DATE 01-27-12

River Valley Engineering, Inc.
(479) 410-2208 Fax: (479) 410-2440
111 North Plaza Ct.
Van Buren, AR 72956

Maguire Iron, Inc.
GENERAL CONTRACTOR
SIOUX FALLS, SOUTH DAKOTA

TANK GEOMETRY / KNUCKLES
250,000 GALLON SPHEROID
SAGINAW, MICHIGAN

RVE DWG. FILE NAME C:\MAGUIRE\SHOP\2011-393
SHEET OF
RVE PROJECT NO. 2011-393
DRAWING NO. 2011-393 /250-12

BOTTOM KNUCKLES

NO WELD GAP INCLUDED IN THESE DIMENSIONS.

WIDE END

CHORD FOR 1 IS	66.7018
CHORD FOR 2 IS	132.2624
CHORD FOR 3 IS	195.5599
CHORD FOR 4 IS	255.5133

ARC FOR 1 IS	66.8927
ARC FOR 2 IS	133.7854
ARC FOR 3 IS	200.6781
ARC FOR 4 IS	267.5708

SMALL END

CHORD FOR 1 IS	54.1452
CHORD FOR 2 IS	107.3640
CHORD FOR 3 IS	158.7458
CHORD FOR 4 IS	207.4114

ARC FOR 1 IS	54.3002
ARC FOR 2 IS	108.6003
ARC FOR 3 IS	162.9005
ARC FOR 4 IS	217.2007

LONGITUDINAL CHORD IS	96.1998
LONGITUDINAL ARC IS	97.4221

TOP KNUCKLES

NO WELD GAP INCLUDED IN THESE DIMENSIONS.

WIDE END

CHORD FOR 1 IS	66.7097
CHORD FOR 2 IS	132.2780
CHORD FOR 3 IS	195.5830
CHORD FOR 4 IS	255.5415

ARC FOR 1 IS	66.9006
ARC FOR 2 IS	133.8012
ARC FOR 3 IS	200.7018
ARC FOR 4 IS	267.6024

SMALL END

CHORD FOR 1 IS	54.1510
CHORD FOR 2 IS	107.3755
CHORD FOR 3 IS	158.7627
CHORD FOR 4 IS	207.4335

ARC FOR 1 IS	54.3060
ARC FOR 2 IS	108.6119
ARC FOR 3 IS	162.9179
ARC FOR 4 IS	217.2238

LONGITUDINAL CHORD IS	185.8750
LONGITUDINAL ARC IS	194.8115

ROOF FINGERS

NO WELD GAP INCLUDED IN THESE DIMENSIONS.

WIDE END

CHORD FOR 1 IS	65.3895
CHORD FOR 2 IS	129.1689
CHORD FOR 3 IS	189.7677
CHORD FOR 4 IS	245.6938

ARC FOR 1 IS	65.6592
ARC FOR 2 IS	131.3183
ARC FOR 3 IS	196.9775
ARC FOR 4 IS	262.6366

SMALL END

CHORD FOR 1 IS	10.3029
CHORD FOR 2 IS	20.3521
CHORD FOR 3 IS	29.9002
CHORD FOR 4 IS	38.7121

ARC FOR 1 IS	10.3454
ARC FOR 2 IS	20.6908
ARC FOR 3 IS	31.0362
ARC FOR 4 IS	41.3816

LONGITUDINAL CHORD IS	195.7967
LONGITUDINAL ARC IS	199.7328

MAGUIRE IRON, INC.

PROJECT NAME: SAGINAW, MI
DRAWING NAME: CHORDS & ARCS
SIZE: 250MG | DATE: 1/25/12 | DWG NO. 0 | REV: 0
SCALE: NO SCALE | AUTHOR: DBE | SHEET: 250-13

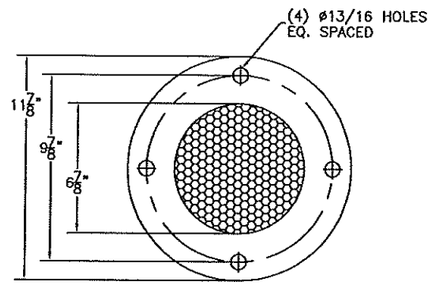

NOTE: #4 SS MESH SCREEN STAINLESS STEEL BOLT BETWEEN (2) 1/4" x 2 1/2" FLANGES INCLUDE (4) 3/4" dia. x 1 1/2" BOLTS/NUTS FIELD WELD TO WS O.F. PIPE

SHOP WELD TO 45deg. ELBOW

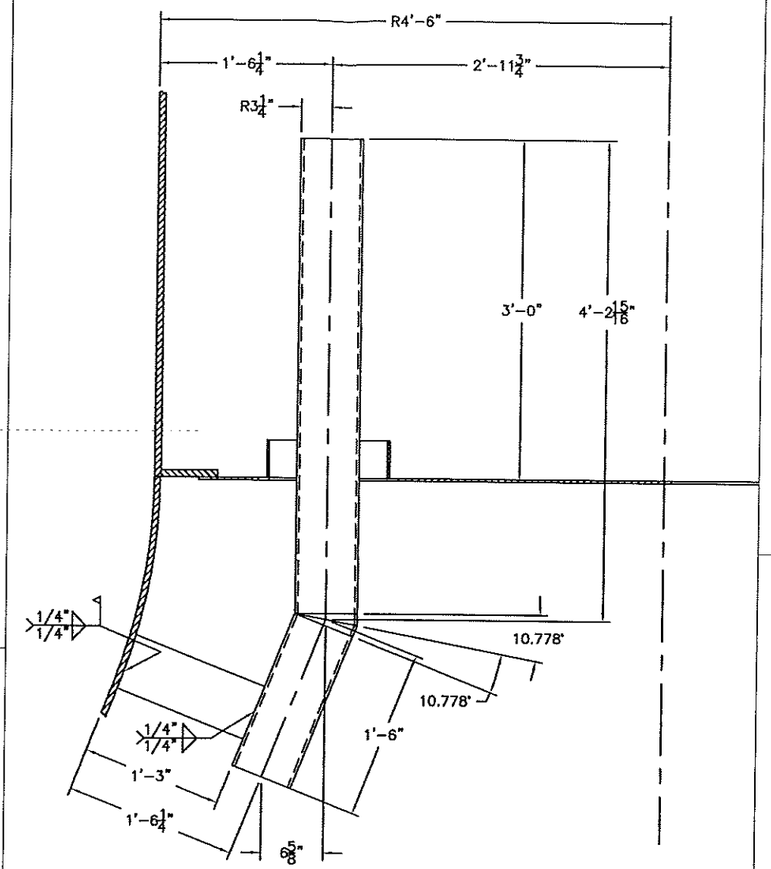

NOTE: SHIP LOOSE AND FIELD WELD (2) BARS 1/2"x6"x15" FOR ATTACHING PIPE TO BASE CONE WALL.

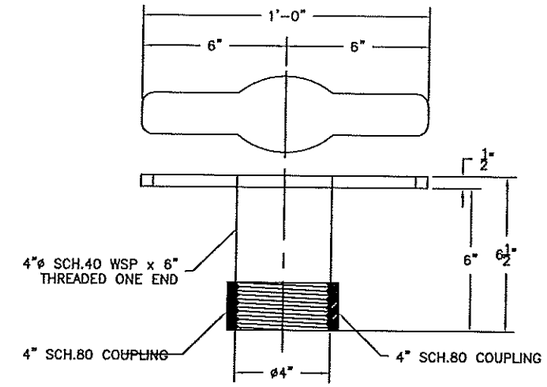

1-CLEANOUT PLUG/DRAIN

SHIP: (2) 4"ø X 6" THREADED NIPPLES
(1) 4"SCH.80 COUPLING W/ PLUG
(1) 4" I.D. X 3'-0" BLACK HOSE
(2) HOSE CLAMPS FOR BLACK HOSE

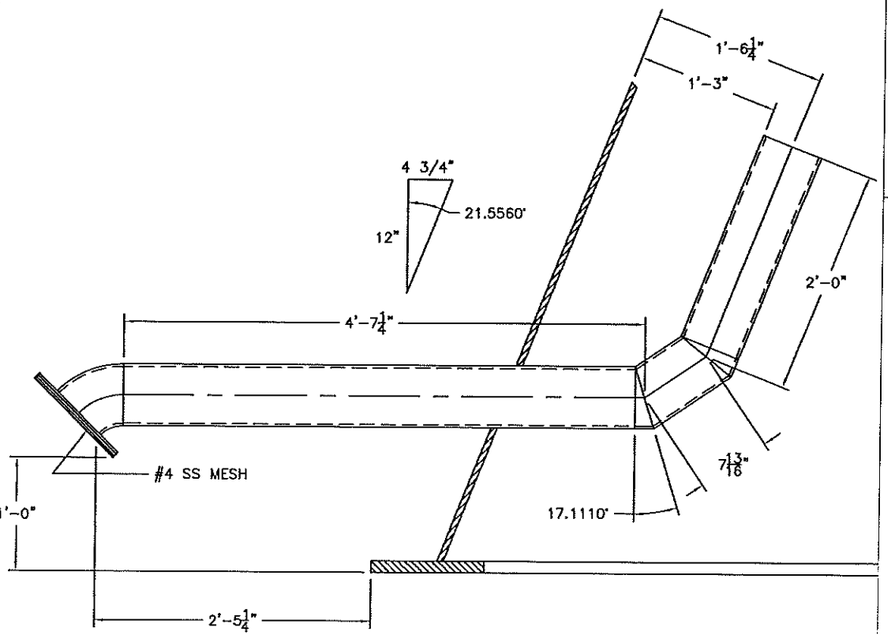

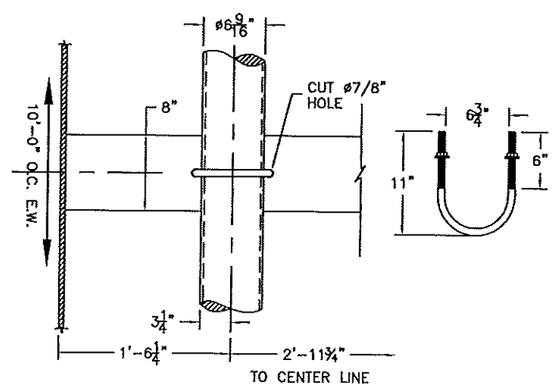

Zinc Overflow Pipe Brackets
(9) SETS OF 3/4" dia. HR all thread with NUTS & WASHERS
Mount to Channels @ 10'-0" O.C.

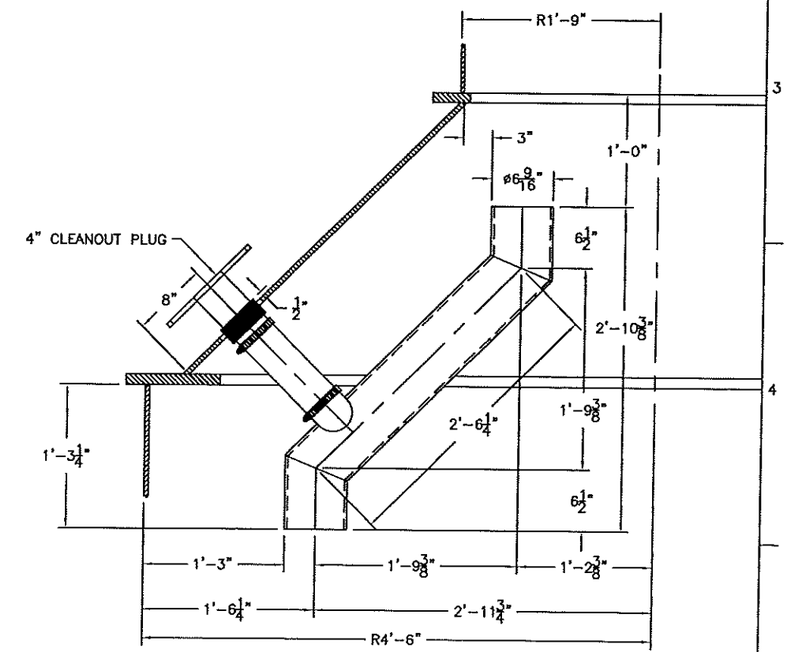

MAGUIRE IRON, INC.	PROJECT NAME: SAGINAW, MI		
	DRAWING NAME: 6" OVERFLOW PIPE & ACCESSORIES		
	SIZE: 250MG	DATE: 1/25/12	DWG NO. 0	REV: 0
	SCALE: VARIES	AUTHOR: DBE	SHEET: 250-14

BASECONE DOOR

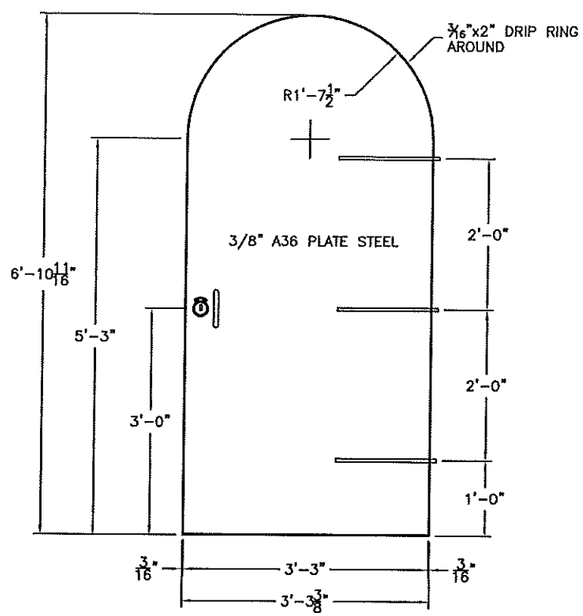

SCALE: 1/2"=1'-0"

COMPONENT DETAILS

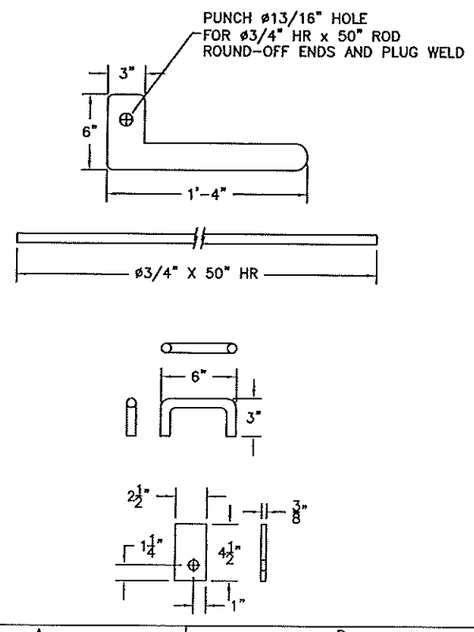

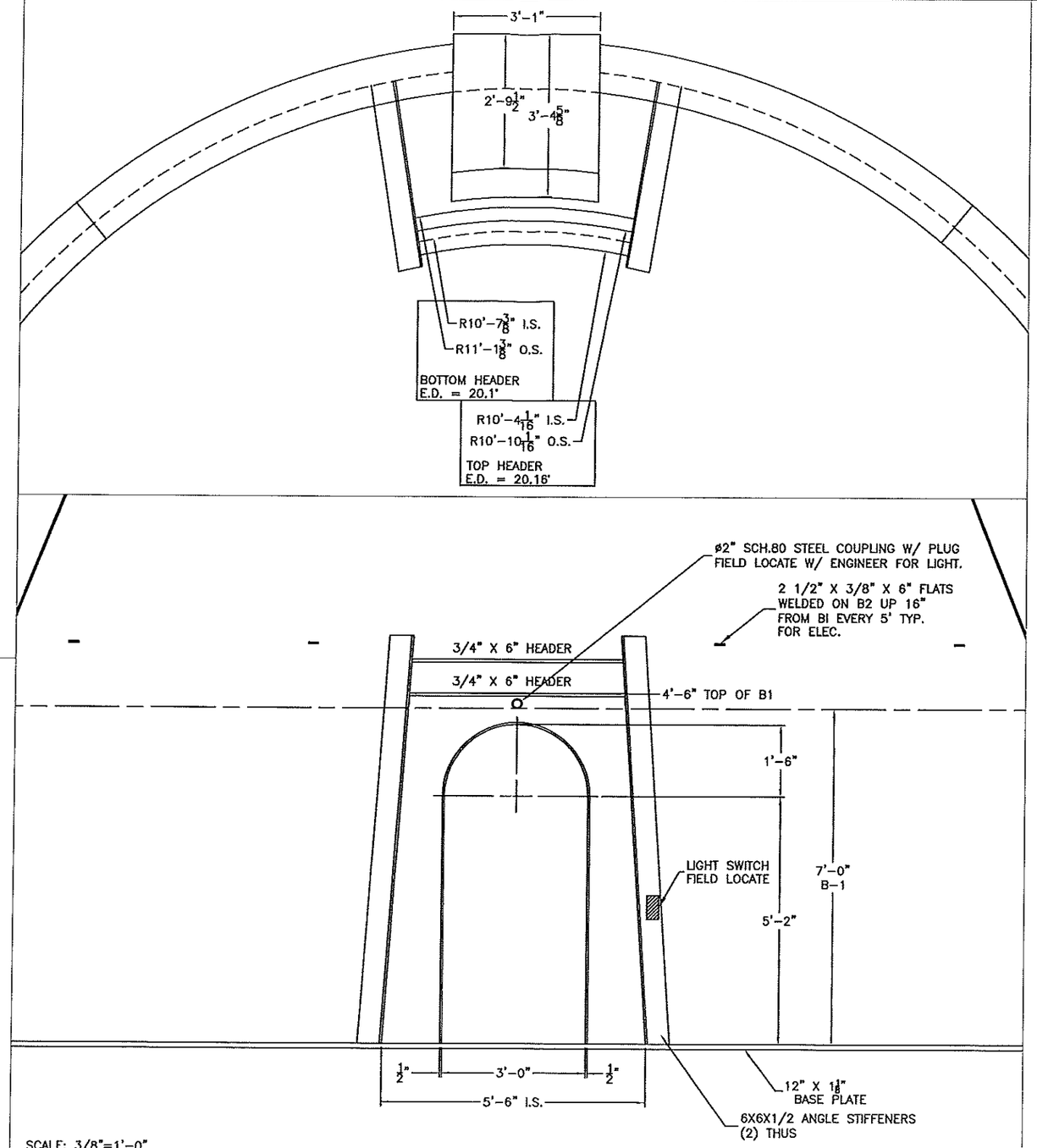

SCALE: 3/8"=1'-0"

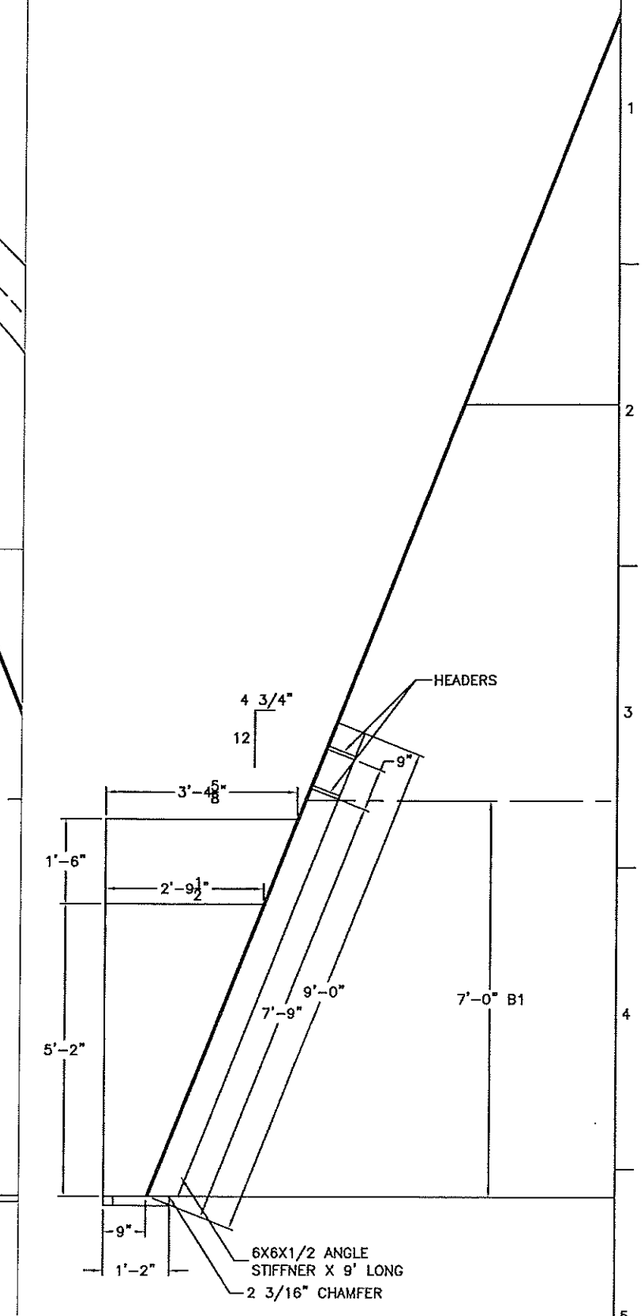

MAGUIRE IRON, INC.

PROJECT NAME: SAGINAW, MI			
DRAWING NAME: DOOR & DOOR CUTTING DETAILS			
SIZE: 250MG	DATE: 1/25/12	DWG NO. 0	REV: 0
SCALE: VARIES	AUTHOR: DBE	SHEET: 250-15	

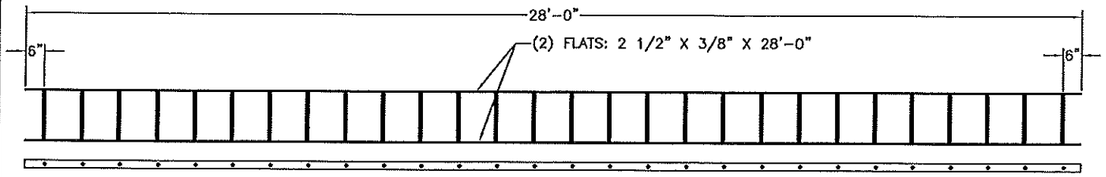

BASECONE LADDER
(1) THUS

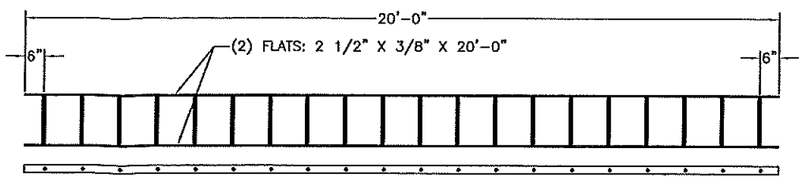

COLUMN LADDER
(4) THUS

LADDER TOP VIEW

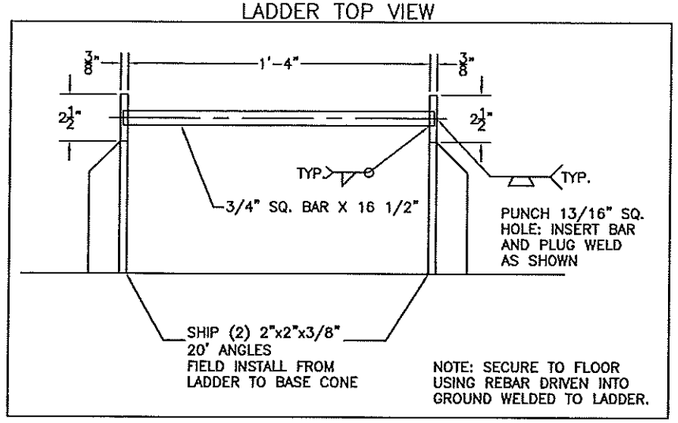

LADDER TOP VIEW

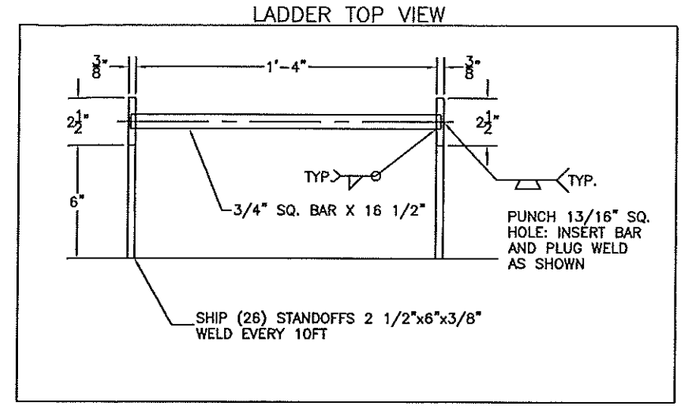

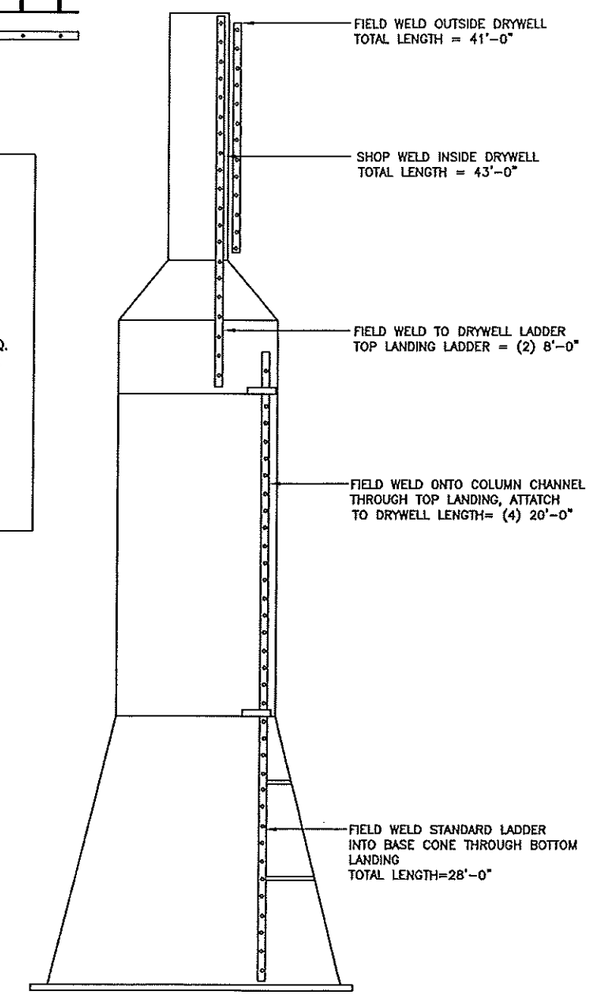

NOTE: SECURE LADDER TO GRAVEL FLOOR USING REBAR DRIVIN IN GROUND AND WELDED TO LADDER

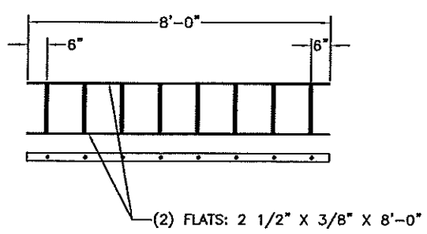

TOP LANDING LADDER
(2) THUS
ATTACH TO DRYWELL LADDER

MAGUIRE IRON, INC.

PROJECT NAME: SAGINAW, MI			
DRAWING NAME: TOWER LADDERS			
SIZE: 250MG	DATE: 1/25/12	DWG NO. 0	REV: 0
SCALE: VARIES	AUTHOR: DBE	SHEET: 250-16	

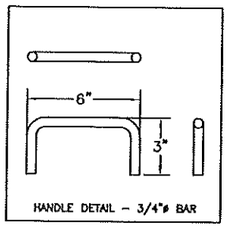

HANDLE DETAIL – 3/4"ø BAR

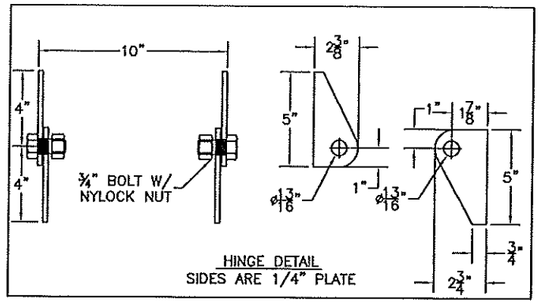

HINGE DETAIL
SIDES ARE 1/4" PLATE

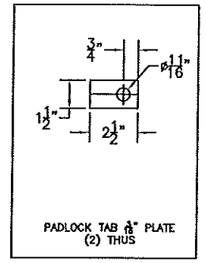

PADLOCK TAB 1/4" PLATE
(2) THUS

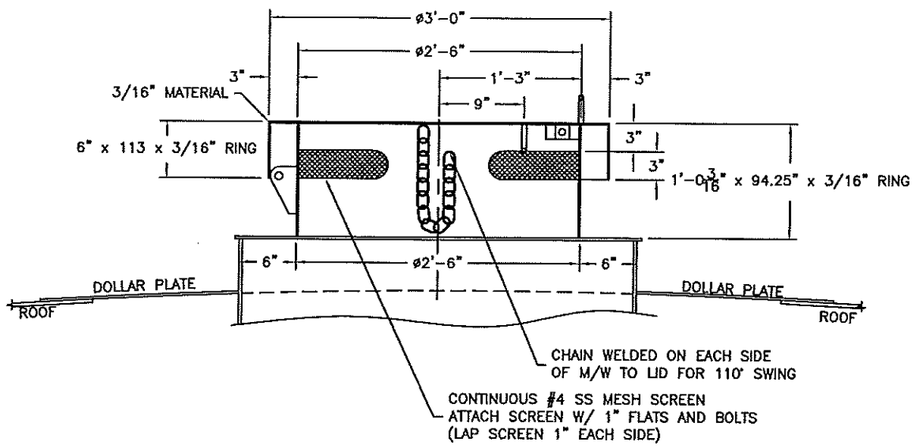

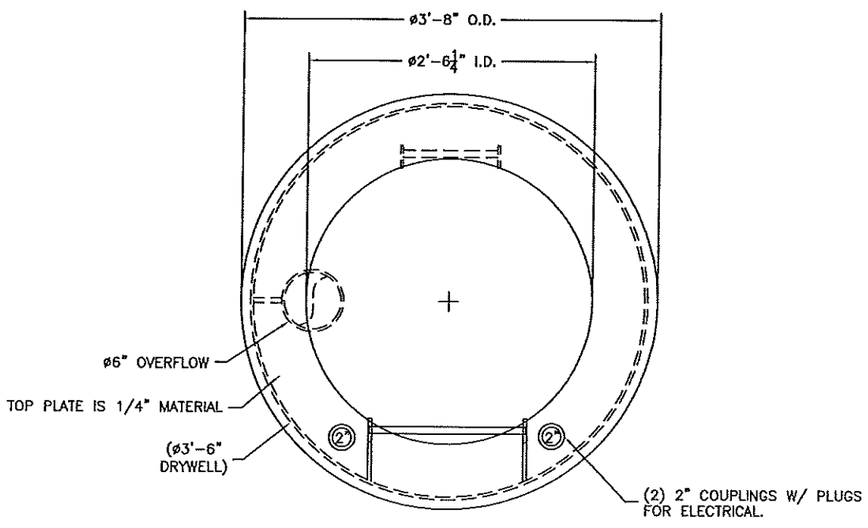

3/4"=1'-0"

30" DRYWELL VENT/MANWAY

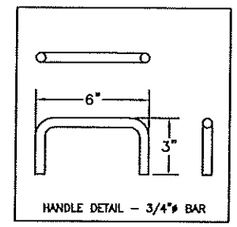

HANDLE DETAIL – 3/4"ø BAR

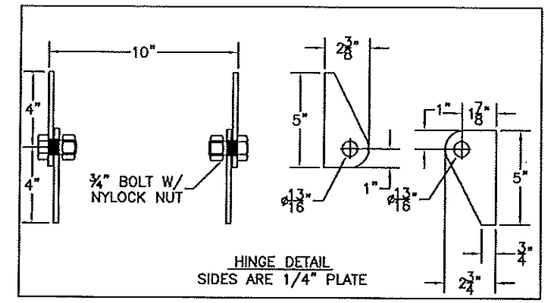

HINGE DETAIL
SIDES ARE 1/4" PLATE

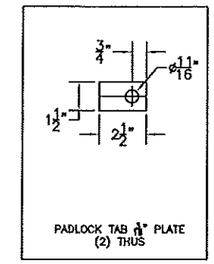

PADLOCK TAB 1/4" PLATE
(2) THUS

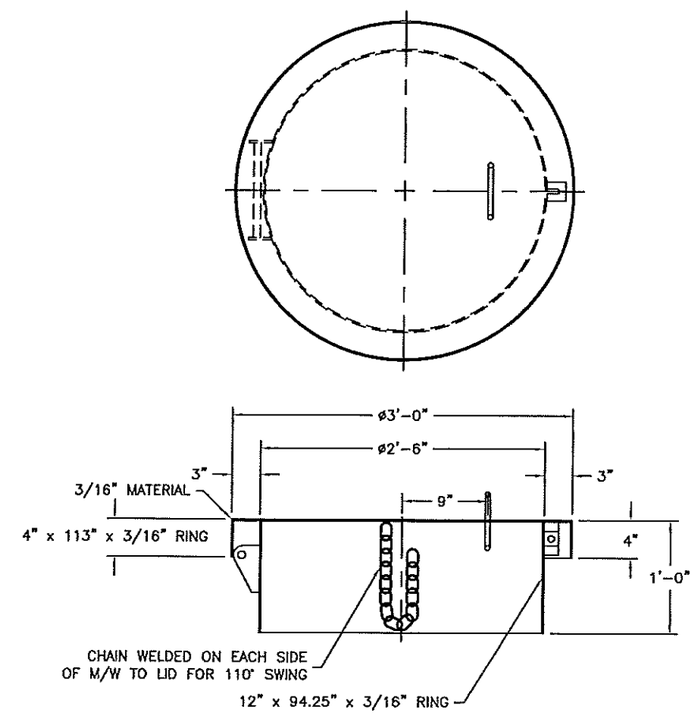

3/4"=1'-0"

30" ROOF MANWAY

MAGUIRE IRON, INC.

PROJECT NAME: SAGINAW, MI			
DRAWING NAME: ACCESS HATCHES			
SIZE: 250MG	DATE: 1/25/12	DWG NO. 0	REV: 0
SCALE: 3/4"=1'-0"	AUTHOR: DBE	SHEET: 250-17	

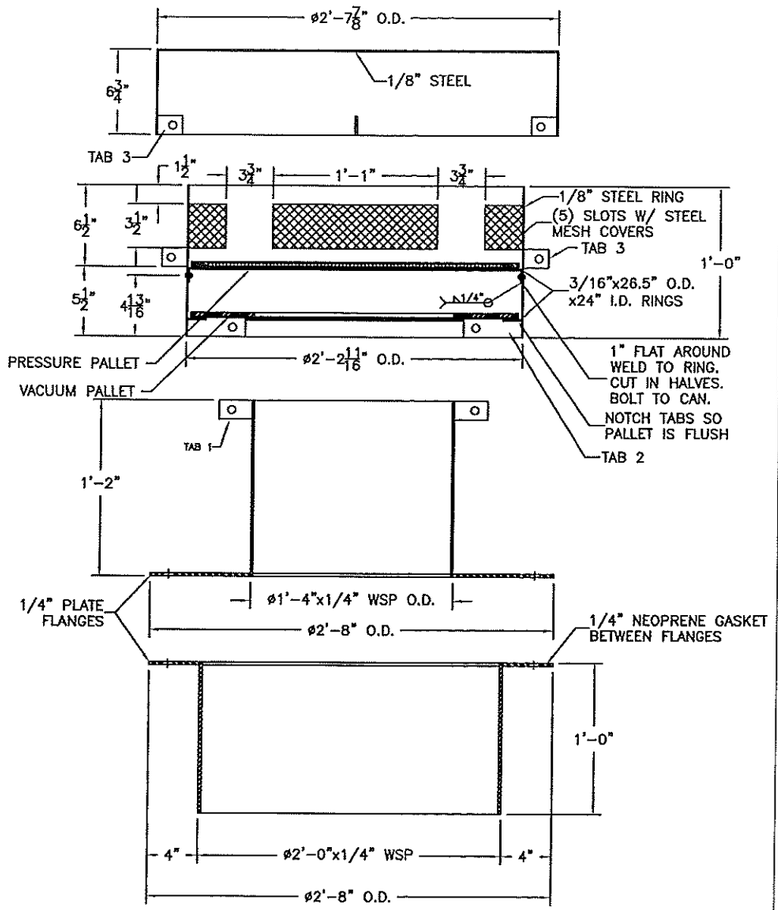

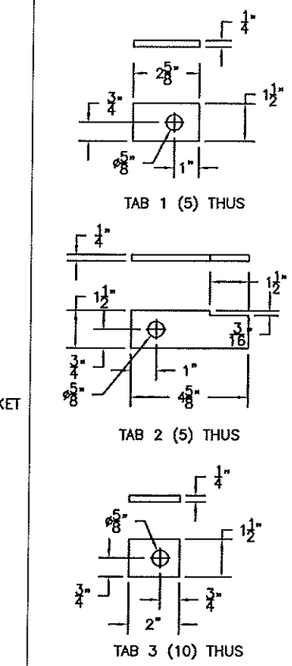

NOTE: SHOP CUT & FIT ALL TABS SO PIPE, SLOTTED CAN AND TOP LID ARE CENTERED

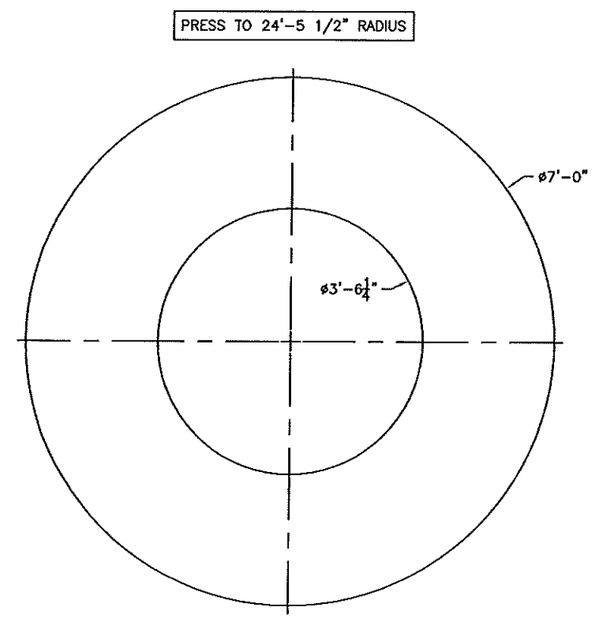

ONE "DOLLAR" PLATE
1/4" PLATE
SHIP IN 2 PCS

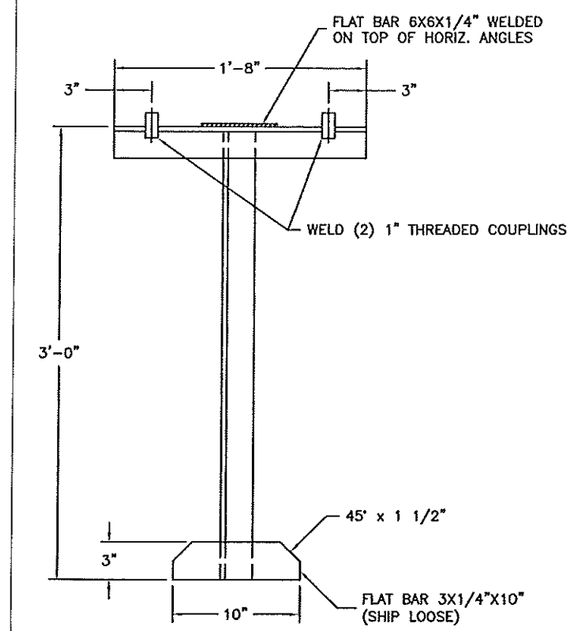

FIELD INSTALL ON HANDRAIL

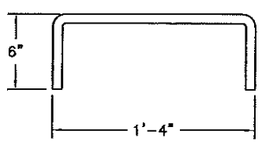

(3) HANDHOLDS
FIELD LOCATE W/ ENGINEER
ABOVE 24" INTERIOR MANWAY

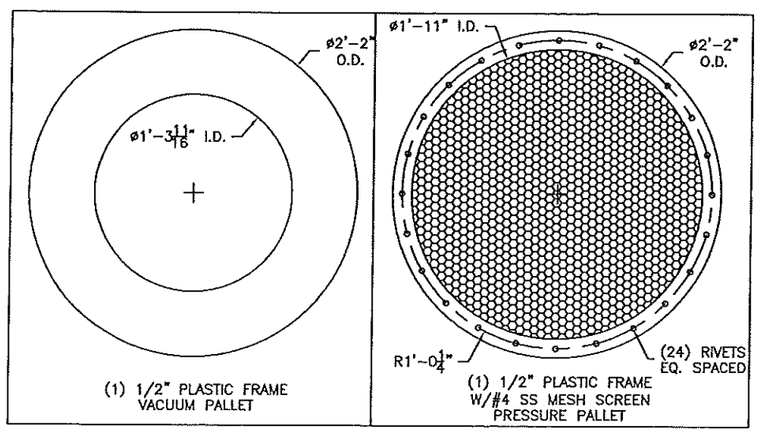

(1) 1/2" PLASTIC FRAME
VACUUM PALLET

(1) 1/2" PLASTIC FRAME
W/#4 SS MESH SCREEN
PRESSURE PALLET

16" FAIL-SAFE VENT W/ 24" FAN-FLANGE

MAGUIRE IRON, INC.

PROJECT NAME: SAGINAW, MI			
DRAWING NAME: 16" FAIL-SAFE VENT, DOLLAR PLATE & OBSTRUCTION LIGHT BRACKET			
SIZE: 250MG	DATE: 1/25/12	DWG NO. 0	REV: 0
SCALE: VARIES	AUTHOR: DBE	SHEET: 250-18	

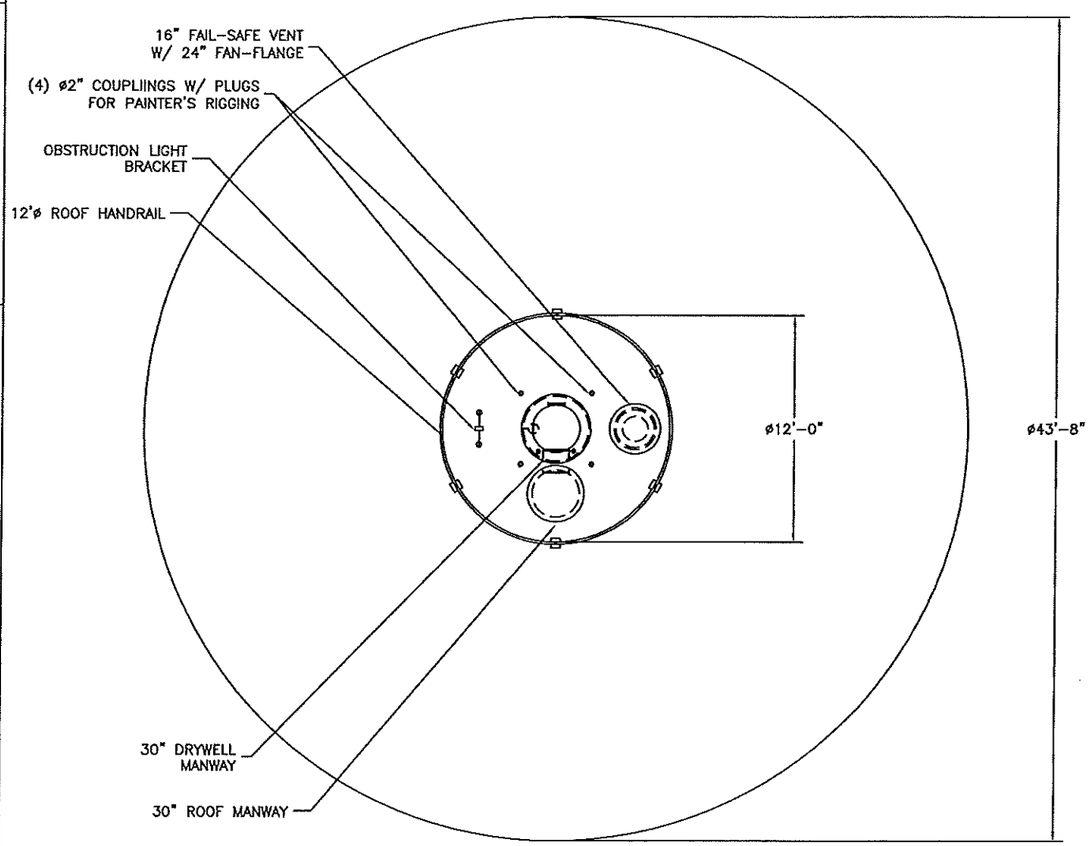

SCALE: 1/8"=1'-0"

ROOF ORIENTATION

SECTION A-A

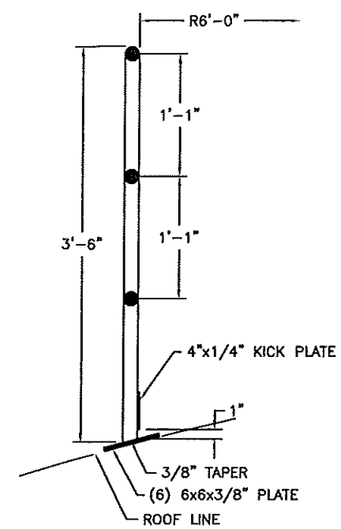

ALL PIPE IS 1 1/2" SCH.40
TOTAL WEIGHT = 660 LBS FINISHED
SHOP FAB AND SHIP IN HALVES

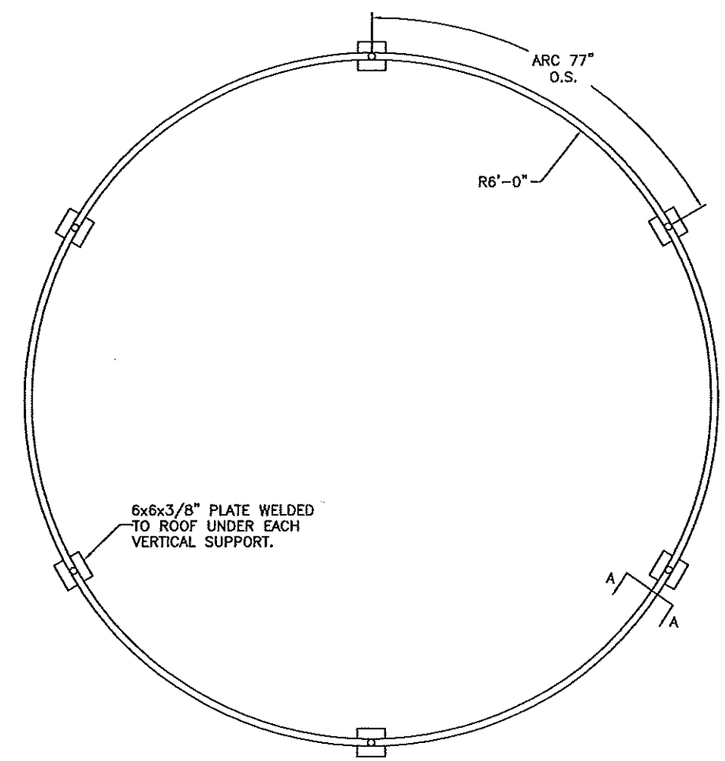

12' TUBULAR ROOF HANDRAIL

MAGUIRE IRON, INC.

PROJECT NAME: SAGINAW, MI			
DRAWING NAME: ROOF ORIENTATION & 12' ROOF HANDRAIL			
SIZE: 250MG	DATE: 1/25/12	DWG NO. 0	REV: 0
SCALE: VARIES	AUTHOR: DBE	SHEET: 250-19	

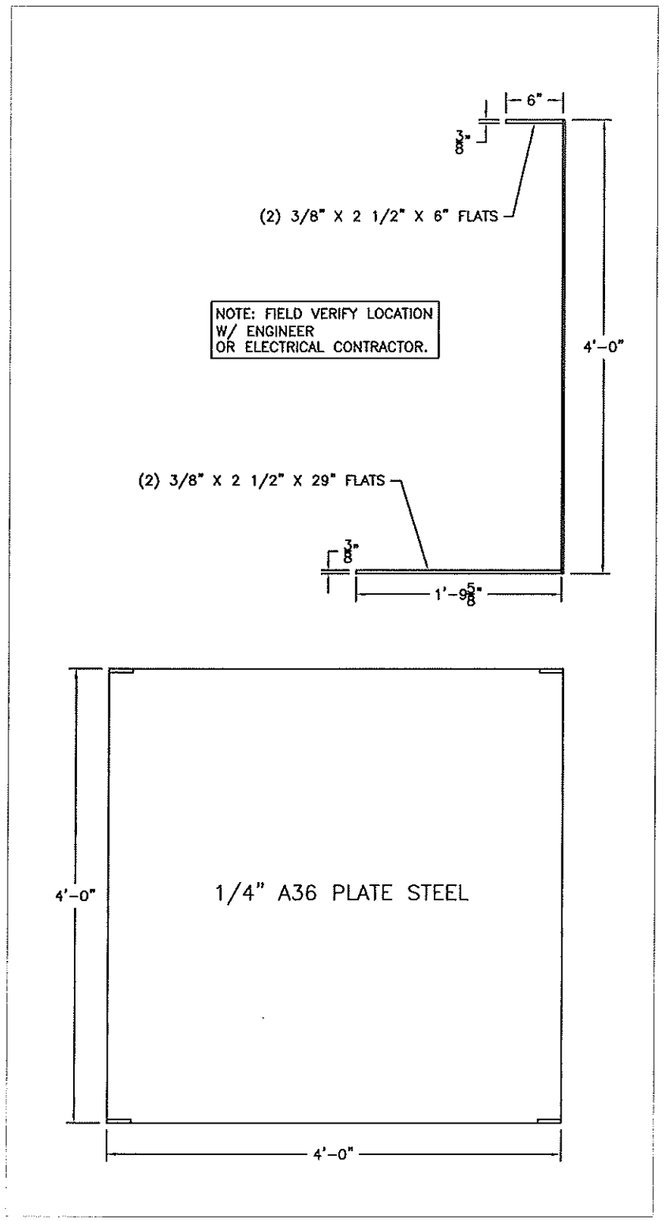

BASECONE ELECTRICAL PANEL

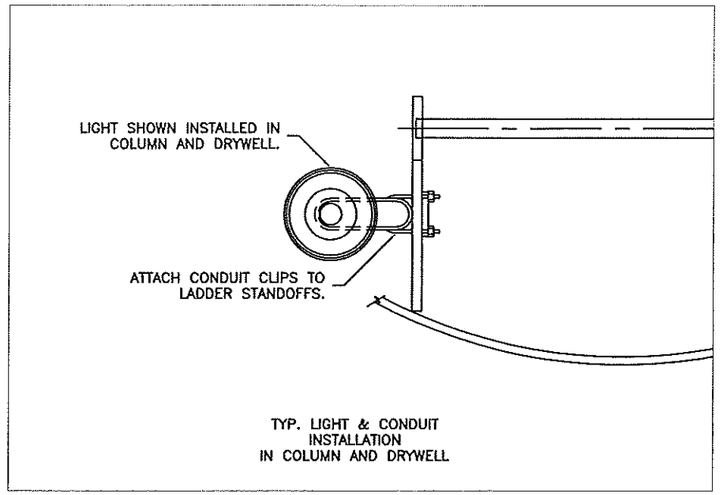

TYP. LIGHT & CONDUIT
INSTALLATION
IN COLUMN AND DRYWELL

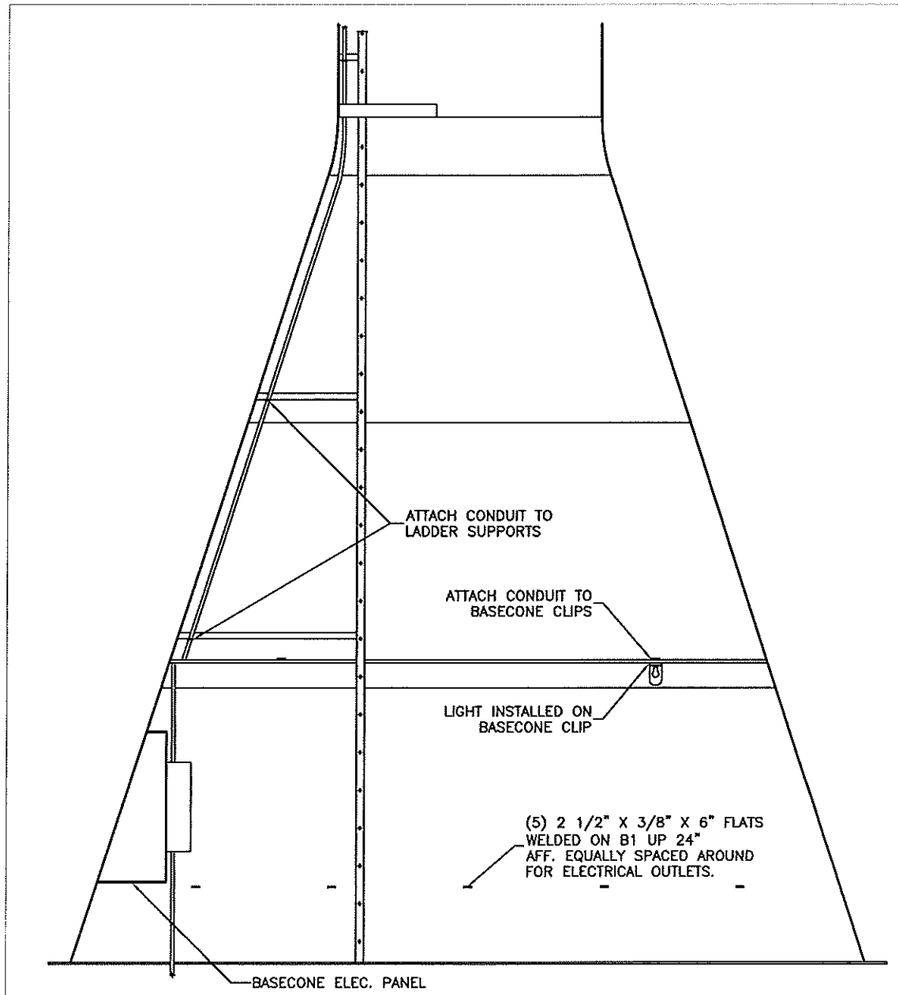

TYP. LIGHT & CONDUIT
INSTALLATION IN BASECONES

MAGUIRE IRON, INC.

PROJECT NAME: SAGNAW, MI			
DRAWING NAME: ELECTRICAL			
SIZE: 250MG	DATE: 1/25/12	DWG NO. 0	REV: 0
SCALE: VARIES	AUTHOR: DBE	SHEET: 250-20	

PROJECT NAME: SAGINAW, MI

CROSS SECTION FOR X-RAY LOCATIONS PER AWWA D100 IN SHOP

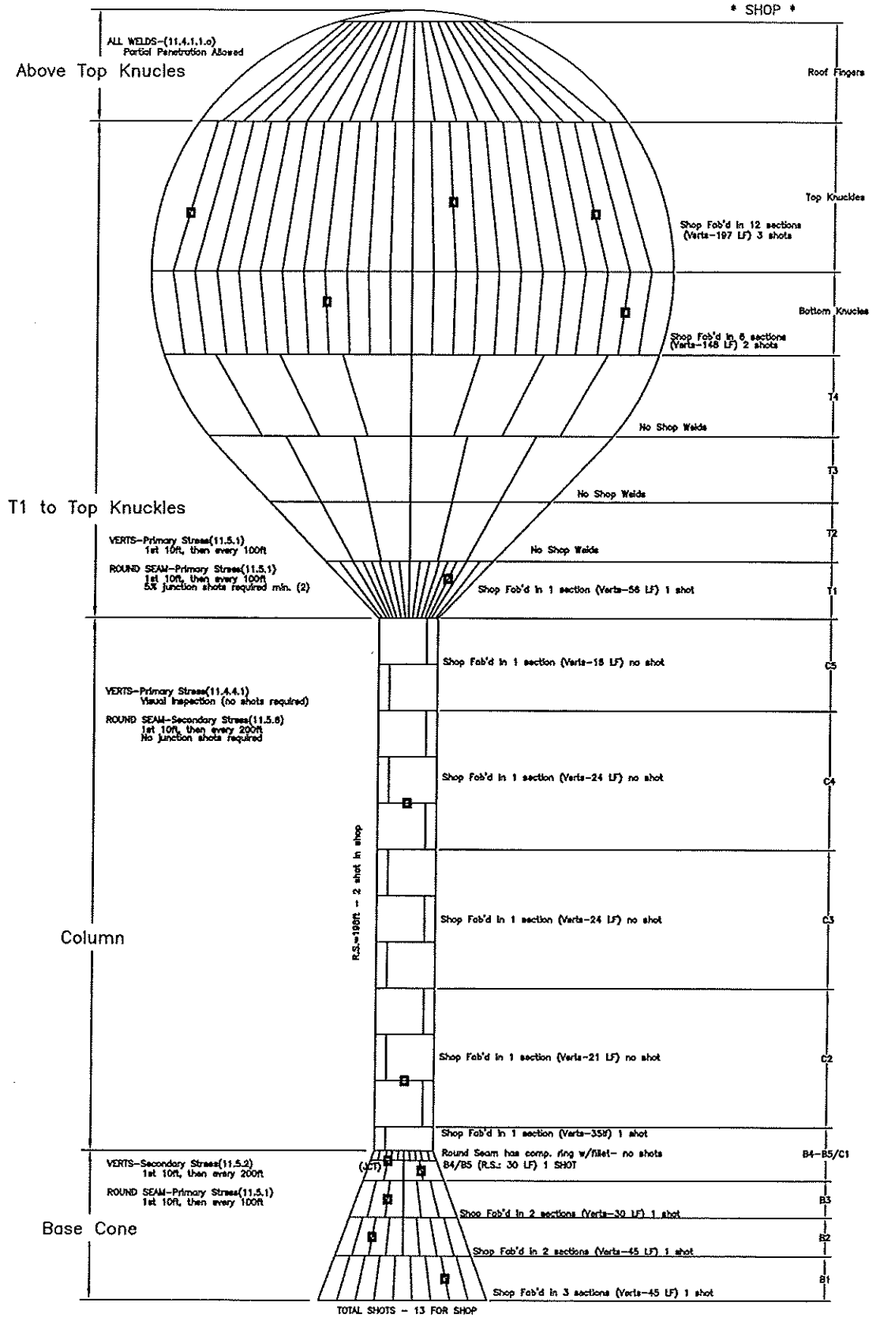

DRAWING LOOKS DISPROPORTIONATE , BASE IS LISTED AS APPROX 30' DIAMETER, SPHERE IS LISTED AS 43' DIAMETER.

PROJECT NAME: SAGINAW, MI

CROSS SECTION FOR X-RAY LOCATIONS PER AWWA D100 IN FIELD

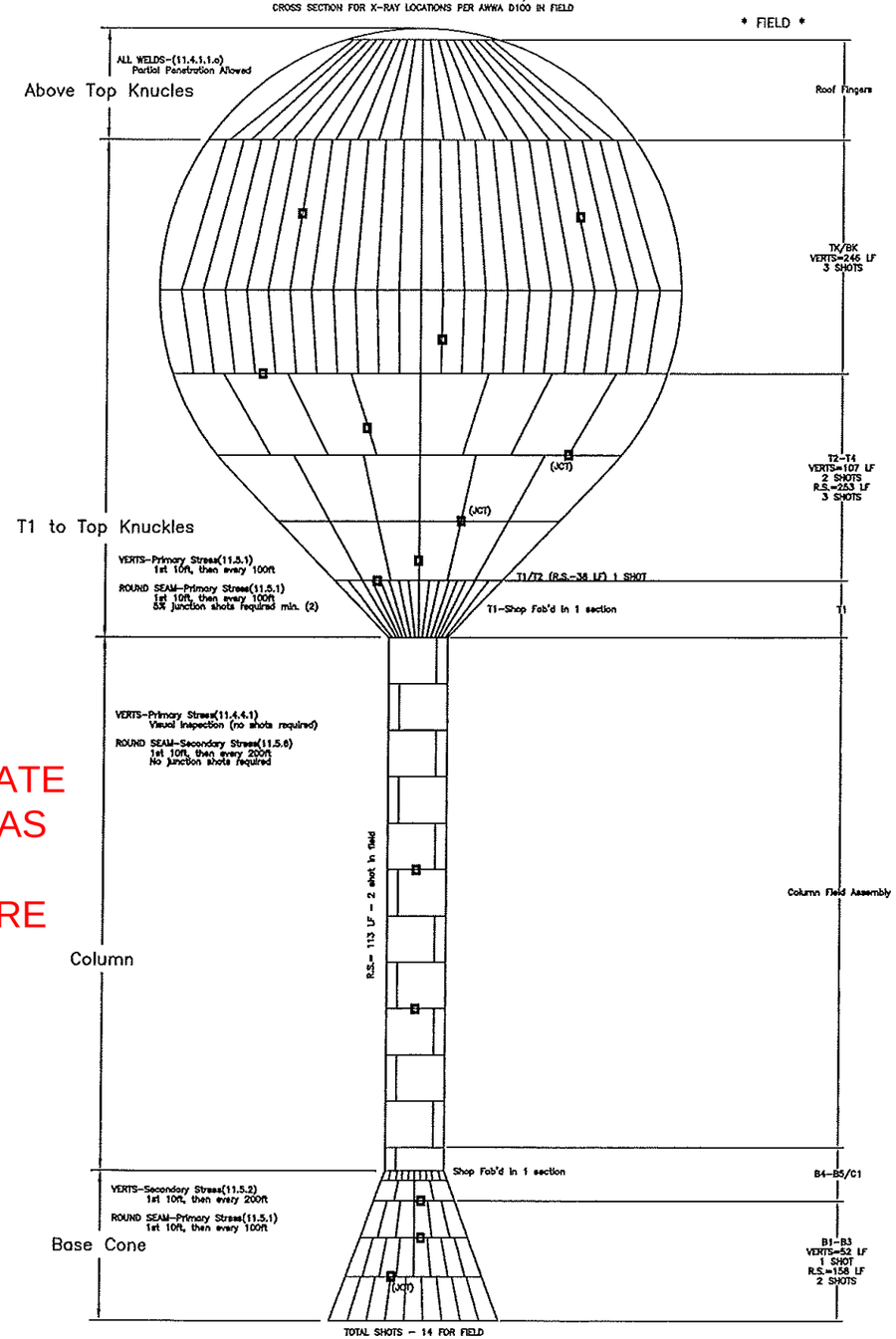

MAGUIRE IRON, INC.

PROJECT NAME: SAGINAW, MI			
DRAWING NAME: RADIOGRAPHY SHOP & FIELD			
SIZE: 250MG	DATE: 1/25/12	DWG NO. 0	REV: 0
SCALE: NO SCALE	AUTHOR: DBE	SHEET: 250-21	