REQUIRED Y	REQUIRED N	ACTIVITY	CONCURRING ACTIVITIES
	X	STRESS	
X		PLANNING	RR Mac 7/2/99 J Bulcock again 7/6/99
X		MATERIALS	Ray Minemills
X		WELDING ENG	[illegible]
	X	QUALITY	
	X	NAVAL ARCHITECTURE	
	X	ILS	
	X	SUBSAFE	
	X	PURCHASING	
	X	TEST	
X		ENG CONF MGMT	Thomas Morrone 7/6/99
	X	OP ENGINEERING	
X		USING TRADE #1	G. Vogel EB OM 7-6-99
X		USING TRADE #2	D.S. Baker 7/2/99
	X	STRUCT/HANDLING	
X		TOOLING	C.F. Lavallee 7/9/99
	X	LIFTING STANDARD	
X		NNS TEAMING	Peter B. Holt 7/6/99
	X	D507 ENGINEERING	
X		WPDD	Lawrence Caddle 7/7/99
	X	COMPONENT ENG	

SIZE	CAGE CODE	VBS	NAVSEA DRAWING NO.	REV
B	–			A
SCALE: NONE	DOC TYPE FX	EB CORP DRAWING NO. 571390168		SHEET 0A

&LASTDATE &LASTTIME

SEE SHEET 4 FOR REVISIONS

FABRICATION TOLERANCES UNLESS OTHERWISE SPECIFIED (2)

WELDMENT/FAB. & ASSY. (1)		CASTING		MACHINING/GENERAL			
DIMENSION	TOL	DIMENSION	TOLERANCE	DIMENSION	TOLERANCE		
			ALL PLACES		1PL	2PL	3PL
ABV 0.0 TO 12.0	±.1	ABV 0.0 TO 2.0	+.06 -.05	ABV 0.00 TO 6.00	±.1	±.02	±.005
ABV 12.0 TO 24.0	±.2	ABV 2.0 TO 5.0	+.10 -.05	ABV 6.00 TO 18.00	±.1	±.04	±.010
ABV 24.0	±.3	ABV 5.0 TO 8.0	+.14 -.10	ABV 18.00 TO 36.00	±.1	±.06	±.015
		ABV 8.0 TO 12.0	+.20 -.12	ABV 36.00	±.1	±.08	±.020
DECK THICKNESS	±.2	ABV 12.0 TO 15.0	+.26 -.18	FILLETS & RADII TO BE .06 TO .14			
		ABV 15.0	+.26 -.25	SURFACE TEXTURE SYMBOLS: ANSI Y14.36-1978			
		FILLETS & RADII TO BE .06 TO .26		THREADS TO BE IN ACCORDANCE WITH FED-STD-H28			

ANGULAR: ± 1° FOR PIPING AND VENTILATION DUCTING
± .5° ANGLE BETWEEN HANGER MOUNTS (60°MIN-120°MAX)
± .5° FOR ALL OTHER APPLICATIONS

DIMENSIONING & TOLERANCING SYMBOLS: ANSI Y14.5M-1982

NOTES: 1. FABRICATION AND ASSEMBLY IS HEREBY DEFINED AS LAYOUT, SHEARING, BURNING, SHAPING AND ASSEMBLY OF PIECES. THESE FABRICATION AND ASSEMBLY TOLERANCES, WHEN APPLICABLE TO COMPLETED WELDMENTS, SHALL INCLUDE THE RESULTANT WELD DISTORTION, UNLESS OTHERWISE SPECIFIED.

2. WHERE CHAIN DIMENSIONS ARE GIVEN, TOLERANCES ON OVERALL DIMENSIONS SHALL GOVERN.

HOLE TOLERANCES - APPLY TO ALL ROUND HOLES WITHIN NOMINAL SIZE RANGE COVERED UNLESS OTHERWISE SPECIFIED

HOLE DIAMETER	TOLERANCE
0.0135 TO 0.125	+.005 - -.001
0.126 TO 0.250	+.006 - -.001
0.251 TO 0.500	+.008 - -.002
0.501 TO 0.750	+.009 - -.002
0.751 TO 1.000	+.010 - -.003
1.001 TO 2.000	+.012 - -.004
2.001 TO 3.000	+.015 - -.005

CONTRACT NO. N00024-96-C-2100

APPVL CAT 3

TEAM APPROVAL

DESIGNER 6/30/99
CHECKER 6/19/99
MAT LEADER 7/2/99
PROJ SUPV 6/2/99
ENGINEER 7/2/99
ENG SUPV/SIT LEADER 7/6/99
NRP N/A
OPERATIONS 7/7/99
AUTHORIZED L.M. Bergemann 7/12/99 DATE

THIS DRAWING IS CONTRACTOR FURNISHED INFORMATION (CFI). FIXTURES SHOWN ARE NOT FOR PERMANENT INSTALLATION OR DELIVERY WITH SHIP

ELECTRIC BOAT CORPORATION
A GENERAL DYNAMICS COMPANY
Groton, Connecticut 06340-4989
CAGE CODE 96169

TITLE
NSSN CLASS SUBMARINE
EQUIPMENT MACHINING
INBOARD COUPLING
ER

SIZE	DOC. TYPE	DRAWING NO.	REV
B	FX	S71390168	A

SCALE: NONE

SHEET 1 OF 32

06/11/99 16:12

TABLE OF CONTENTS & REVISION STATUS

SHEET	QTY	TITLE	REV
1	1	LEAD SHEET	A
2	1	TABLE OF CONTENTS	A
3	1	RESERVATIONS	A
4	1	REVISIONS	A
5	1	REFERENCES	A
6-1	1	NOTES	A
6-2	1	NOTES	A
6-3	1	NOTES	A
7-1	1	ENGINEERING PARTS LIST	A
7-2	1	ENGINEERING PARTS LIST	A
7-3	1	ENGINEERING PARTS LIST	A
7-4	1	ENGINEERING PARTS LIST	A
7-5	1	ENGINEERING PARTS LIST	A
7-6	1	ENGINEERING PARTS LIST	A
8	1	LIST OF EQUIPMENT	A
9	1	ISO OF KIT 1 INSTALLED	A
10	1	ELEVATION OF KIT 1 INSTALLED	A
11	1	ISO SECTION CUT OF ITEM 4, TABLE 11	A
12	1	ISOMETRIC OF KIT 1	A
13	1	ISOMETRIC OF ITEM A1	A
14	1	ASSY & MACH DET OF ITEM A1, SECTION 14-A	A
15	1	DETAIL OF ITEM 1	A
16	1	DETAIL 16-A	A
17	1	DETAIL OF ITEM 1	A
18	1	DETAIL OF ITEM 3	A
19	1	ISOMETRIC OF ITEM A2	A
20	1	ASSY & MACH DET OF ITEM A2, SECT 20-A	A
21	1	DETAIL OF ITEM 11, SECTION 21-A	A
22	1	DETAIL OF ITEM 11	A
23	1	DETAIL OF ITEM 2 AND 13	A
24	1	ISOMETRIC OF ITEM A3	A
25	1	ASSEMBLY OF ITEM A3, DET OF ITEM 16	A

SHEET	QTY	TITLE	REV
26	1	VIEW 26-A, DETAIL OF ITEM 17	A
27	1	DETAIL OF ITEMS 18 THRU 22	A
28	1	ISOMETRIC OF ITEM A4	A
29	1	ASSY OF ITEM A4, DET OF IT 25-27, DET 29-A	A
30	1	DETAIL OF ITEM 29 THRU 31	A
31	1	DETAIL OF ITEM 32 AND 33	A
32	1	DETAIL OF ITEMS 34 THRU 36	A

NAVSEA DWG NO.	SHEET 3

RESERVATIONS

SIZE	CAGE CODE	WBS	NAVSEA DRAWING NO.	REV
B				A

SCALE	DOC TYPE	EB CORP DRAWING NO.	SHEET
NONE	FX	S71390168	3

LAST MOD

NAVSEA DWG NO.	SHEET 4

REVISIONS

REV	DESCRIPTION	REV	DESCRIPTION
A	INITIAL ISSUE		

SIZE	CAGE CODE	WBS	NAVSEA DRAWING NO.	REV
B				A
SCALE	DOC TYPE	EB CORP DRAWING NO.		SHEET
NONE	FX	S71390168		4

LAST MOD

NAVSEA DWG NO. | SHEET 5

REFERENCES

NO	TITLE	CAGE / CAGE	NAVSEA DWG NO / DRAWING NUMBER
1	COMBINATION THRUST AND JOURN	----- / 07332	---------- / 061000099
2	MAIN SHAFT ASSY, DET & INSTL	53711 / 96169	243-6985876 / H713-0105
3	SHIPPING ASSEMBLY	----- / 07332	---------- / 075001424

NO	TITLE	CAGE / CAGE	NAVSEA DWG NO / DRAWING NUMBER

SIZE	CAGE CODE	WBS	NAVSEA DRAWING NO.	REV
B				A

SCALE	DOC TYPE	EB CORP DRAWING NO.	SHEET
NONE	FX	S71390168	5

LAST MOD 07/08/99 19:17

GENERAL NOTES

6005 ITEM(S) DEPICTED ON THIS DRAWING SHALL BE EXAMINED FOR COMPLETENESS AFTER FABRICATION, OR AT THE TIME OF RECEIPT FOR PURCHASED ITEMS.

6008 UNLESS OTHERWISE SPECIFIED, ALL DIMENSIONS ARE IN INCHES.

6009 BREAK ALL SHARP CORNERS.

6012 MARK AFTER COMPLETION OF FABRICATION, IN THE AREA SHOWN, THE FOLLOWING INFORMATION:
1. DRAWING NUMBER
2. SPECIAL PROPERTY IDENTIFICATION NUMBER USN8800168
3. PART NUMBER (SHOWN ON GRAPHICS SHEETS)

6013 ITEMS IDENTIFIED WITH "<>" ARE FOUND IN THE LIST OF EQUIPMENT ON SHEET 8.

6016 MARKING TO BE MADE WITH LOW STRESS STEEL DIE STAMP WITH 1/4 INCH HIGH LETTERS IN LOCATIONS AS SHOWN.

6026 THE MANUFACTURE OF ITEMS ON THIS DRAWING IS AUTHORIZED BY SPECIAL PROPERTY REQUEST NO. USN8800168.

6042 EXCEPT FOR ITEM(S) A1 AND A2, AFTER FABRICATION IS COMPLETE, ALL UNMACHINED STRUCTURE SHALL BE CLEANED (SSPC SP-3) AND COATED WITH ONE TOUCH-UP COAT AND ONE FULL COAT OF ZINC MOLYBDATE PRIMER, TT-P-645 OR EQUAL, AND TWO COATS OF IMPERIAL CHEMICAL INDUSTRIES' ICI DEVOE DEVLEX 4208-9800 SAFETY BLUE WATERBORNE ACRYLIC ENAMEL PAINT (PART NUMBER 218022606), THE COLOR OF WHICH IS TO BE EQUAL TO COLOR CHIP 15123 AS SHOWN IN FEDERAL SPECIFICATION 595. (PAINTING REQUIREMENTS FOR FIXTURES STORED AND USED IN INTERIOR LOCATIONS WITH ONLY BRIEF PERIODS OF OUTSIDE EXPOSURE.)

6055 AFTER FABRICATION IS COMPLETE, IN DESIGNATED AREA, A 2"X4" SURFACE SHALL BE CLEANED (SSPC SP-3) AND COATED WITH ONE TOUCH-UP COAT AND ONE FULL COAT OF ZINC MOLYBDATE PRIMER, TT-P-645 OR EQUAL, AND TWO COATS OF IMPERIAL CHEMICAL INDUSTRIES' ICI DEVOE DEVFLEX 4208-9800 SAFETY BLUE WATERBORNE ACRYLIC ENAMEL PAINT (PART NUMBER 218022606), THE COLOR OF WHICH IS TO BE EQUAL TO COLOR CHIP 15123 AS SHOWN IN FEDERAL SPECIFICATION 595. (PAINTING REQUIREMENTS FOR FIXTURES BEING PARTIALLY PAINTED FOR IDENTIFICATION PURPOSES ONLY.)

6057 UNLESS OTHERWISE NOTED, THE SHIPBUILDER, IN LIEU OF THE DESIGN YARD, MAY APPROVE DEVIATIONS FROM THIS DRAWING. SUCH DEVIATIONS WILL BE DOCUMENTED IN ACCORDANCE WITH THE NSSN CLASS SUBMARINE DRAWING APPROVAL PROCEDURE (NAVSEA DWG. NO 802-6983987).

6058 DEVIATIONS FROM THIS DRAWING THAT AFFECT USE OF THE FIXTURE/EQUIPMENT BY ANOTHER FACILITY SHALL BE APPROVED BY THE DESIGN YARD IN ACCORDANCE WITH THE NSSN CLASS SUBMARINE DRAWING APPROVAL PROCEDURE (NAVSEA DWG NO. 802-6983987).

6066 UNLESS OTHERWISE SPECIFIED:

A. THREE-PLACE DECIMAL HOLE DIAMETERS FROM .125" TO 3.000" SHALL MEET THE TOLERANCE GIVEN IN THE HOLE TOLERANCES BLOCK ON SHEET 1. THESE HOLES ARE INTENDED TO BE PRECISION DRILLED, PREFERABLY IN THE MACHINE SHOP.

B. TWO-PLACE DECIMAL HOLE DIAMETERS SHALL MEET THE TOLERANCE GIVEN IN THE MACHINING/GENERAL TOLERANCE BLOCK ON SHEET 1. THESE HOLES ARE INTENDED TO BE DRILLED, EQUIPMENT USED TO DRILL IS SHIPYARD'S OPTION.

C. ONE-PLACE DECIMAL HOLE DIAMETERS SHALL MEET THE TOLERANCE GIVEN IN THE MACHINING/GENERAL TOLERANCE BLOCK ON SHEET 1. ANY METHOD, E.G. BURNING, PUNCHING, DRILLING, ETC., MAY BE USED TO MAKE THESE HOLES; SHIPYARD'S OPTION.

6121 WHERE REFERENCED, COAT THREADS WITH ANTI-GALLING COMPOUND MOLYKOTE P-37, EB P/N P-37 OR EQUAL. (REFERENCE DOCUMENT A-A-59004)

7000 ALL 7000 SERIES NOTES ARE UNIQUE TO THIS DRAWING. TEXT FOR THESE NOTES IS NOT THE SAME ON ALL DRAWINGS.

7001 MAINTAIN LUBRICATION OF ITEM 12 (SPHERICAL BEARING) AND ITEM 4 WHERE IT SLIDES THRU ITEM 12.

7002 SHOP BLOCKING TO BE DETERMINED AT SHIPBUILDERS DISCRETION, HOWEVER THE FOLLOWING REQUIREMENTS MUST BE MET:
1. HEIGHT MUST BE BETWEEN 23 AND 24 INCHES. THE SHIPPING ASSEMBLY (REFERENCE 3) MAY BE SHIMMED TO SUIT THIS HEIGHT REQUIREMENT.

(NOTE CONTINUED ON NEXT SHEET)

GENERAL NOTES

7002 CONT'D

2. TOP MUST BE STEEL TO ALLOW A4 TO BE TACKWELDED IN PLACE.
3. MUST BE ABLE TO SUPPORT 25,000 LBS.

7003 ITEMS 30 AND 34 ARE TO BE USED ON THE FIRST SHIP ONLY TO ACCOMMODATE 3.0" DIAMETER HOLES IN THE THRUST BEARING SHAFT. ITEMS 29 AND 33 WILL BE USED ON ALL OTHER SHIPS WHERE THE THRUST BEARING SHAFT WILL COME IN WITH 3.125" DIAMETER HOLES.

WELD NOTES

6001 UNLESS OTHERWISE NOTED, ALL WELDING OF OR TO STRUCTURES ON THIS DRAWING SHALL BE TO PROCEDURES AND BY PERSONNEL QUALIFIED TO MIL-STD-1688 FOR HY-80 AND HY-100 MATERIAL; TO MIL-STD-1689 FOR OTHER MILITARY MATERIALS; OR TO AWS D1.1-94 FOR COMMERCIALLY PROCURED FIXTURE/ASSEMBLIES. (PERSONNEL AND PROCEDURES QUALIFIED TO MIL-STD-248 SATISFY THESE REQUIREMENTS).
(CONTRACTUALLY INVOKED NAVSEA TECHNICAL PUBLICATIONS MAY BE USED IN LIEU OF MIL-STD'S REFERENCED IN THIS NOTE.)

6014 UNLESS OTHERWISE NOTED, ALL WELDS ARE TYPICAL FOR SIMILAR CONNECTIONS.

6028 ALL FILLET AND PARTIAL PENETRATION GROOVE TEE WELD SIZES FOR WELDS OF, OR TO CARBON STEEL, ORDINARY STRENGTH STEEL OR HIGHER STRENGTH STEEL ARE BASED ON THE USE OF E70XX WELDING ELECTRODES. USE OF OTHER ALLOWABLE ELECTRODES OF HIGHER STRENGTH WILL NOT REQUIRE RESIZING OF WELD JOINT.

6052 ALL WELDS SHALL BE VERIFIED BY A TRADESPERSON FOR MINIMUM SIZE AND COMPLETENESS TO DRAWING REQUIREMENTS. NO RECORDS ARE REQUIRED.

6065 ALL WELD JOINT DESIGNS SHOWN ON THIS DRAWING SHALL BE CONSIDERED "SIMILAR TO" WELD JOINT DESIGNS SHOWN IN MIL-STD-22D. WELD JOINT DESIGNS FOR FIXTURES AND HANDLING EQUIPMENT ON TYPE FX DRAWINGS ARE NOT REQUIRED TO BE IN STRICT CONFORMANCE WITH MIL-STD-22D. THIS DOCUMENT IS ONLY USED AS GUIDANCE WHEN DEVELOPING JOINT DESIGNS.

ENGINEERING PARTS LIST

EPL DEFINITIONS

PS LVL	PRODUCT STRUCTURE LEVEL
MF/EQ PART NO.	MAKE FROM OR EQUIVALENT PART NO. OR BLANK IF NOT APPLICABLE
REV	AUTHORIZING REVISION OF EPL RECORD
PSC	PART STATUS CODE (F=FINAL PART, O=OPTIONAL, A=ALTERNATE, I=INFORMATION, E=ESTIMATE B=BULK, M=FURNISHED WITH, R=REFERENCE PART)
C/G	CONTRACTOR (CON) OR GOVERNMENT FURNISHED MATERIAL (GFM)
SS	SUBSAFE MATERIAL IDENTIFICATION (SS = SUBSAFE, NS = NOT SUBSAFE)
HI	HULL INTEGRITY MATERIAL (YES OR NO)
LVL	MATERIAL IDENTIFICATION AND CONTROL LEVEL (I, III, OR NA)
QTY	QUANTITY
UM	UNIT OF MEASURE
M/E	MAKE FROM (MF) OR EQUIVALENT (EQ) PART CODE OR BLANK
PICL	PIPE CLASS
PART NAME	PART NAME INCLUDING NOUN NAME, TYPE, MODIFIER
MF/EQ PART NAME	MF/EQ PART NAME INCLUDING NOUN NAME, TYPE, MODIFIER
DESCRIPTION	PART OR MF/EQ PART DESCRIPTION IF APPLICABLE (MAT'L, SIZE, PRESSURE RATING, ELECTRICAL CABLE/COMP TYPE)
CAGE/ SPECIFICATION	COMMERCIAL OR GOVERNMENT ENTITY CODE/PRIMARY SPECIFICATION (DOCUMENTS) AND SPECIFICATION CLASS DATA
TILE SYSTEM	TILE SYSTEM APPLIED TO THE PART
HSC	HIERARCHICAL STRUCTURE CODE
CLHAP	CLASS AND HULL APPLICABILITY
SHEET/ZONE	SHEET AND ZONE OF LABEL OF PART

ENGINEERING PARTS LIST - QTY PER SHIP

PART NUMBER PS LVL MF/EQ PART NO.	REV PSC C/G	SS HI LVL	QTY UM M/E PICL	PART NAME MF/EQ PART NAME DESCRIPTION CAGE/SPECIFICATION			REMARKS 1 REMARKS 2 REMARKS 3 TILE SYSTEM HSC	CLHAP	SHEET / ZONE
KIT1 1	A F CON	NS NO NA	1 PC	FIXTURE	EQUIPMENT MACHINING	INBOARD COUPLING ER	NONE	NSSN	
A1 2	A F CON	NS NO NA	1 PC	ASSEMBLY	AFT BEARING	SUPPORT	NONE	NSSN	
1 3 24-03-3000	A F CON	NS NO NA	1 PC MF	PLATE PLATE AL COMME/	PRECISION PRECISION 3.000 THK	CAST TOOL & JIG	NONE	NSSN	14 /
2 3 24-03-1000	A F CON	NS NO NA	4 PC MF	PLATE PLATE AL COMME/	PRECISION PRECISION 1.000 THK	CAST TOOL & JIG	NONE	NSSN	14 /
3 3 24-03-1500	A F CON	NS NO NA	1 PC MF	PLATE PLATE AL COMME/	PRECISION PRECISION 1.500 THK	CAST TOOL & JIG	NONE	NSSN	14 /
5 3 CLB-3000	A F CON	NS NO NA	3 PC EQ	BUSHING BUSHING STL 99862/CLB-3000	DOWEL DOWEL 0.375ID X 0.6250D X 0.600LG		NONE	NSSN	14 /
6 3 CL-3-BND	A F CON	NS NO NA	3 PC EQ	PIN DOWEL STL 99862/CL-3-BND	DOWEL BULLET HEAD OD 0.375 X 1.030 LG	BULLET NOSE NOSE	NONE	NSSN	14 /
7 3 68-00-0000	A F CON	NS NO NA	8 PC EQ	SCREW SCREW STL 81346/ASTM-A574 MOD	CAP CAP 0.500-13UNRC-3AX1.000	SCH CYL SCH CYL	NONE	NSSN	14 /
8 3 218009975	A F CON	NS NO NA	4 PC EQ	SCREW SCREW STL 81349/MIL-S-1222 TY 2 GR 574 MOD	CAP CAP 0.312-18UNC-3AX1.500	SCH CYL SCH CYL	NONE	NSSN	14 /
9 3 60-50-0233	A F CON	NS NO NA	8 PC EQ	INSERT INSERT CRES #MECH 96906/MS122125 MS122125	SCR THD SCR THD 0.500-13X0.750	NCH NCH	NONE	NSSN	

SIZE	CAGE CODE	WBS	NAVSEA DRAWING NO.	REV
B				A

SCALE	DOC TYPE	EB CORP DRAWING NO.	SHEET
NONE	FX	S71390168	7-2

LAST MOD 07/12/99 13:32

ENGINEERING PARTS LIST - QTY PER SHIP

PART NUMBER PS LVL MF/EQ PART NO.	REV PSC C/G	SS HI LVL	QTY UM M/E PICL	PART NAME MF/EQ PART NAME DESCRIPTION CAGE/SPECIFICATION	REMARKS 1 REMARKS 2 REMARKS 3 TILE SYSTEM HSC	CLHAP	SHEET / ZONE
10 3 60-50-0224	A F CON	NS NO NA	4 PC EG	INSERT SCR THD NCH INSERT SCR THD NCH CRES #MECH 0.312-18X0.468 96906/MS-122122 MS122122	NONE	NSSN	
A2 2	A F CON	NS NO NA	1 PC	ASSEMBLY FWD BEARING SUPPORT	NONE	NSSN	
2 3 24-03-1000	A F CON	NS NO NA	4 PC MF	PLATE PRECISION PLATE PRECISION CAST TOOL & JIG AL 1.000 THK COMME/	NONE	NSSN	20 /
7 3 68-00-0000	A F CON	NS NO NA	8 PC EQ	SCREW CAP SCH CYL SCREW CAP SCH CYL STL 0.500-13UNRC-3AX1.000 81346/ASTM-A574 MOD	NONE	NSSN	20 /
9 3 60-50-0233	A F CON	NS NO NA	8 PC EQ	INSERT SCR THD NCH INSERT SCR THD NCH CRES #MECH 0.500-13X0.750 96906/MS122125 MS122125	NONE	NSSN	
11 3 24-03-2000	A F CON	NS NO NA	1 PC MF	PLATE PRECISION PLATE PRECISION CAST TOOL & JIG AL 2.000 THK COMME/	NONE	NSSN	20 /
12 3 15SF24	A F CON	NS NO NA	1 PC EQ	BEARING PLAIN SPHER BEARING PLAIN SPHER STL 1.5000 (BORE) 60380/15SF24	NONE	NSSN	20 /
13 3 218001192	A F CON	NS NO NA	1 PC MF	BAR ROUND BAR ROUND HIGH STRENGTH STL 4.250 81349/MIL-S-22698 AH-36, CL-U	NONE	NSSN	20 /
14 3 218009955	A F CON	NS NO NA	3 PC EQ	SCREW CAP SCH CYL SCREW CAP SCH CYL STL 0.250-20UNC-3AX1.000 81349/MIL-S-1222 TY 2 GR 574 MOD	NONE	NSSN	20 /
15 3 60-50-0222	A F CON	NS NO NA	3 PC EQ	INSERT SCR THD NCH INSERT SCR THD NCH CRES #MECH 0.250-20X0.750 96906/MS-122241	NONE	NSSN	

SIZE	CAGE CODE	WBS	NAVSEA DRAWING NO.	REV
B				A

SCALE	DOC TYPE	EB CORP DRAWING NO.	SHEET
NONE	FX	S71390168	7-3

LAST MOD 07/12/99 13:32

ENGINEERING PARTS LIST - QTY PER SHIP

PART NUMBER PS LVL MF/EQ PART NO.	REV PSC C/G	SS HI LVL	QTY UM M/E PICL	PART NAME MF/EQ PART NAME DESCRIPTION CAGE/SPECIFICATION	REMARKS 1 REMARKS 2 REMARKS 3 TILE SYSTEM HSC	CLHAP	SHEET / ZONE
A3 2	A F CON	NS NO NA	1 PC	ASSEMBLY V BLOCK	NONE	NSSN	
16 3 211040377	A F CON	NS NO NA	1 PC MF	PLATE PLATE HIGH STR STL 1.500 THK 81349/MIL-S-22698 EH-36T, CL-P	NONE	NSSN	25 /
17 3 218001998	A F CON	NS NO NA	2 PC MF	PLATE PLATE HIGH STR STL 0.750 THK 81349/MIL-S-22698 EH-36T, CL-P	NONE	NSSN	25 /
18 3 EB218001124	A F CON	NS NO NA	1 PC MF	PLATE PLATE HIGH STR STL 0.500 THK 81349/MIL-S-22698 EH-36T, CL-P	NONE	NSSN	25 /
19 3 EB218002464	A F CON	NS NO NA	2 PC MF	PLATE PLATE HIGH STR STL 2.000 THK 81349/MIL-S-22698 EH-36T, CL-P	NONE	NSSN	25 /
20 3 EB218001125	A F CON	NS NO NA	4 PC MF	PLATE PLATE HIGH STR STL 1.000 THK 81349/MIL-S-22698 EH-36T, CL-P	NONE	NSSN	25 /
21 3 EB218001999	A F CON	NS NO NA	2 PC MF	PLATE PLATE HIGH STR STL 1.250 THK 81349/MIL-S-22698 EH-36T, CL-P	NONE	NSSN	25 /
22 3 56-10-3617	A F CON	NS NO NA	2 PC MF	SHEET SHEET PTFE VIRGIN TEFLON 0.500 81346/ASTM-D3293 TYPE-II	NONE	NSSN	25 /
23 3 67-00-C375F	A F CON	NS NO NA	4 PC EQ	SCREW FULLY THREADED HEX HD SCREW FULLY THREADED HEX HD STL 1.500-12UNF-2A X 3.750 81346/ASTM-A354 GRADE BC MOD	NONE	NSSN	24 /
38 3 60-23-1271	A F CON	NS NO NA	18 PC EQ	SCREW MACH FLH SLTD GALV SCREW MACH FLH SLTD GALV STL 0.250-20UNC-2A X 2.000 81348/FF-S-92 TY 1 STY 2S	NONE	NSSN	25 /

SIZE	CAGE CODE	WBS	NAVSEA DRAWING NO.	REV
B				A
SCALE	DOC TYPE	EB CORP DRAWING NO.		SHEET
NONE	FX	S71390168		7-4

LAST MOD 07/12/99 13:32

ENGINEERING PARTS LIST - QTY PER SHIP

PART NUMBER PS LVL MF/EQ PART NO.	REV PSC C/G	SS HI LVL	QTY UM M/E PICL	PART NAME MF/EQ PART NAME DESCRIPTION CAGE/SPECIFICATION	REMARKS 1 REMARKS 2 REMARKS 3 TILE SYSTEM HSC	CLHAP	SHEET / ZONE
39 3 60-08-1210	A F CON	NS NO NA	16 PC EG	NUT SLFLKG HEX GALV NUT SLFLKG HEX GALV STL 0.250-20UNC-3B 96906/MS17829 MS17829-4C MOD	NONE	NSSN	25 /
A4 2	A F CON	NS NO NA	1 PC	ASSEMBLY BASE PLATE	NONE	NSSN	
24 3 EB218002464	A F CON	NS NO NA	1 PC MF	PLATE PLATE HIGH STR STL 2.000 THK 81349/MIL-S-22698 EH-36T, CL-P	NONE	NSSN	29 /
25 3 EB218002464	A F CON	NS NO NA	4 PC MF	PLATE PLATE HIGH STR STL 2.000 THK 81349/MIL-S-22698 EH-36T, CL-P	NONE	NSSN	29 /
26 3 EB218001124	A F CON	NS NO NA	8 PC MF	PLATE PLATE HIGH STR STL 0.500 THK 81349/MIL-S-22698 EH-36T, CL-P	NONE	NSSN	29 /
27 3 EB218001124	A F CON	NS NO NA	4 PC MF	PLATE PLATE HIGH STR STL 0.500 THK 81349/MIL-S-22698 EH-36T, CL-P	NONE	NSSN	29 /
28 3 67-00-8550F	A F CON	NS NO NA	8 PC EQ	SCREW CAP HEX HD FULLY THD SCREW CAP HEX HD FULLY THD STL 1.000.12UNF-2AX5.500 81346/ASTM-A354 GRADE BC MOD	NONE	NSSN	28 /
4 2 SMA1902A	A F CON	NS NO NA	1 PC EQ	ASSEMBLY SHELL REAMER ARBOR ASSEMBLY SHELL REAMER ARBOR N/A MTPAS/SMA1902A	NONE	NSSN	11 /
8 2 218009975	A F CON	NS NO NA	4 PC EQ	SCREW CAP SCH CYL SCREW CAP SCH CYL STL 0.312-18UNC-3AX1.500 81349/MIL-S-1222 TY 2 GR 574 MOD	NONE	NSSN	12 /
29 2 218014451	A F CON	NS NO NA	2 PC MF	BAR ROUND BAR ROUND HIGH STRENGTH STL 3.250 81349/MIL-S-22698 AH-36, CL-U	NONE	NSSN	12 /

ENGINEERING PARTS LIST - QTY PER SHIP

PART NUMBER PS LVL MF/EQ PART NO.	REV PSC C/G	SS HI LVL	QTY UM M/E PICL	PART NAME MF/EQ PART NAME DESCRIPTION CAGE/SPECIFICATION	REMARKS 1 REMARKS 2 REMARKS 3 TILE SYSTEM HSC	CLHAP	SHEET / ZONE
30 2 218014451	A F CON	NS NO NA	2 PC MF	BAR ROUND BAR ROUND HIGH STRENGTH STL 3.250 81349/MIL-S-22698 AH-36, CL-U	NONE	NSSN	9 /
31 2 11-NS-0152	A F CON	NS NO NA	2 PC MF	BAR ROUND BAR ROUND BRZ 4.500 DIA 81346/ASTM-B505 ALLOY C92200	NONE	NSSN	9 /
32 2 37-45-7864	A F CON	NS NO NA	2 PC MF	BAR ROUND BAR ROUND BRZ 4.000 81348/QQ-C-390 ALY-C90300 TY-3	NONE	NSSN	12 /
33 2 37-45-7864	A F CON	NS NO NA	2 PC MF	BAR ROUND BAR ROUND BRZ 4.000 81348/QQ-C-390 ALY-C90300 TY-3	NONE	NSSN	12 /
34 2 37-45-7864	A F CON	NS NO NA	2 PC MF	BAR ROUND BAR ROUND BRZ 4.000 81348/QQ-C-390 ALY-C90300 TY-3	NONE	NSSN	9 /
35 2 60-25-7435A	A F CON	NS NO NA	2 PC MF	ROD THREADED ROD THREADED CONTINUOUS STL 1.000-8UNC-2A 81349/MIL-S-1222 TY 4 SYM B7	NONE	NSSN	9 /
36 2 EB218001123	A F CON	NS NO NA	4 PC MF	PLATE PLATE HIGH STR STL 0.250 THK 81349/MIL-S-22698 DH-36, CL-P	NONE	NSSN	9 /
37 2 218017985	A F CON	NS NO NA	8 PC EQ	NUT PL HEX NUT PL HEX STL 1.000-8UNC-2B 81349/MIL-S-1222 TY 1 SYMB 4	NONE	NSSN	9 /

SIZE	CAGE CODE	WBS	NAVSEA DRAWING NO.	REV
B				A

SCALE	DOC TYPE	EB CORP DRAWING NO.	SHEET
NONE	FX	S71390168	7-6

LAST MOD 07/12/99 13:32

LIST OF EQUIPMENT

ITEM NO	QTY	DESCRIPTION	SOURCE
1	1	ROTATIONAL DRIVE ASSEMBLY CLIMAX MODEL #BB1149	MACHINIST STOCK
2	1	AXIAL FEED ASSEMBLY CLIMAX MODEL #BB1149	MACHINIST STOCK
3	1	BORING BAR 2.25" DIA. CLIMAX MODEL #BB1149 (MODIFIED FOR #5 FEMALE MORSE TAPER)	MACHINIST STOCK
4	1	AXIAL LEADSCREW ASSEMBLY CLIMAX MODEL #BB1149	MACHINIST STOCK
5	1	SPHERICAL BEARING CLIMAX MODEL #BB1149	MACHINIST STOCK

SIZE	CAGE CODE	WBS	NAVSEA DRAWING NO.	REV
B	–			A
SCALE: NONE	DOC TYPE FX	EB CORP DRAWING NO. S71390168		SHEET 8

06/10/99 22:05

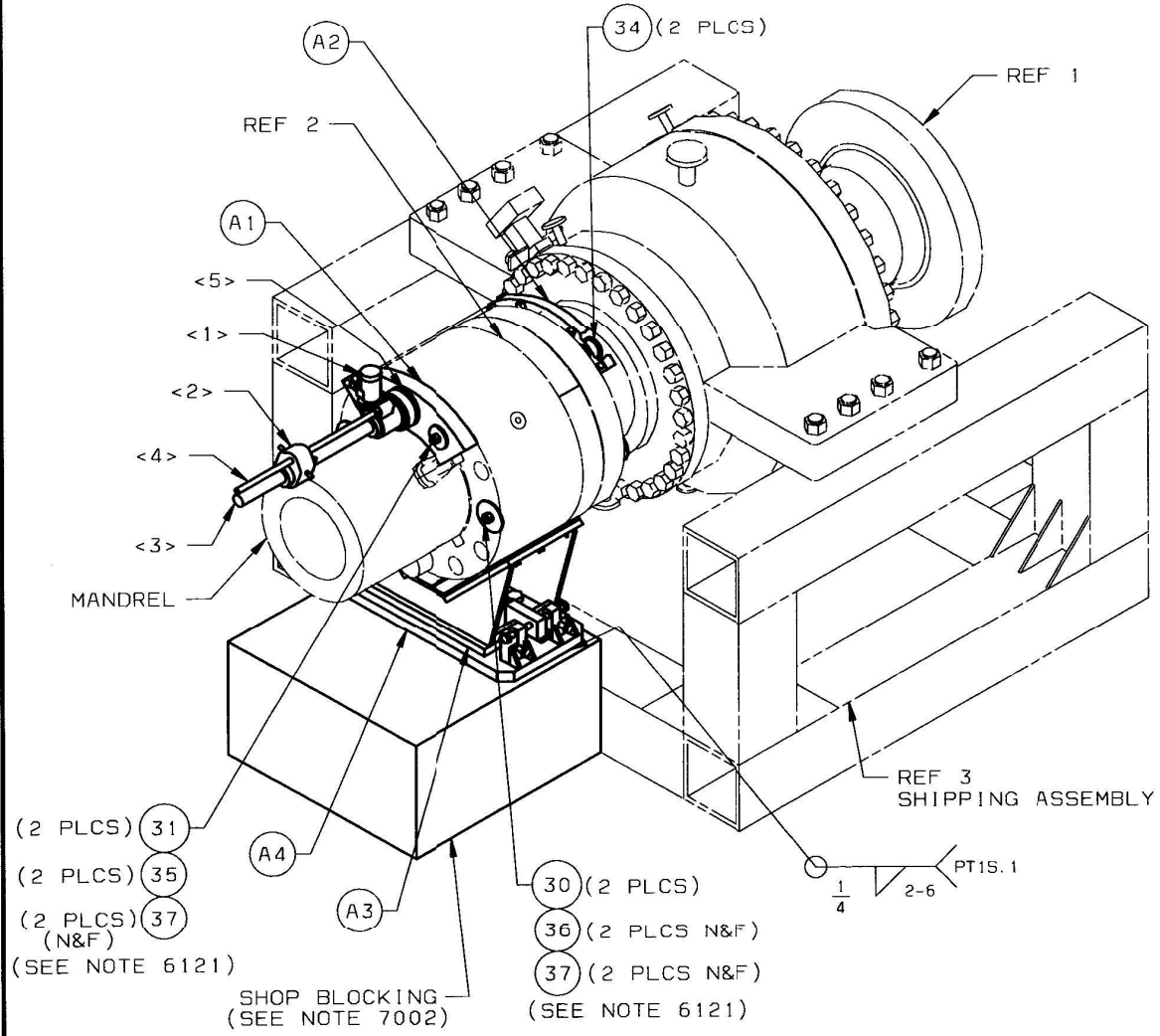

ISOMETRIC OF KIT 1 INSTALLED

(USAGE VIEWS AND REAMING PROCEDURES)
(ITEMS 4, 29, 32 AND 33 NOT SHOWN)

USAGE NOTES:

1. BLOCK UP MANDREL AND REF 2 ITEMS USING SHOP BLOCKING (SEE NOTE 7002), ITEM A3 AND ITEM A4. ALIGN REF 1, REF 2 ITEMS AND MANDREL TO REF 2 DRAWING REQUIREMENTS.
2. INSTALL ITEM A1 (WITHOUT ITEM 3) WITH ITEM 31 (2 PLCS) AND ITEM A2 WITH ITEM 34 (2 PLCS) USING ITEM 35 (2 PLCS) AND ITEM 37 (4 PLCS). ASSURE THERE IS EQUAL THREAD PROTRUSION ON EACH SIDE. SNUG ITEM 37 DO NOT TIGHTEN NOW.
3. INSTALL ITEM <5> ONTO ITEM 3 OF ITEM A1. ASSEMBLE ITEM 4 FOR THE 3.125 DIA REAMING OPERATION WITH ITEMS 4-4 AND 4-5. INSERT ITEM 4 INTO REF 2 AND THRU ITEM 12 (SEE NOTE 7001). INSTALL ITEM 3 OF A1 USING ITEM 8 (4 PLCS).
4. INSTALL ITEM 30 (2 PLCS) EACH 90° APART FROM THE FIRST HOLE TO BE REAMED WITH ITEMS 36 AND 37 AND TIGHTEN.
5. INSTALL ITEMS <3> ONTO ITEM 4 . INSTALL <1>, <2> AND <4> TO ITEM <5>. ASSURE ITEM 4 ROTATES FREELY AND TIGHTEN ITEM 37 (4 PLCS).
6. DURING REAMING IT WILL BE NECESSARY TO REMOVE ITEM 4-4 AND 4-5 AS THEY PASS THRU ITEM 12 DUE TO THE LIMITED SPACE BEHIND A2.
7. AFTER INITAL REAMING REMOVE ITEMS <1>, <2>, <3> AND <4>. REMOVE ITEM 3 OF A1 WITH ITEM <5> ATTACHED . REMOVE ITEM 4 FROM REF 2. REMOVE ITEM 4-6 OF ITEM 4 AND REPLACE WITH ITEM 4-7. REINSTALL ITEMS 4-4 AND 4-5 ONTO ITEM 4. REPEAT INSTALLATION/REAMING PROCEDURE.
8. REPEAT REAMING OPERATION WITH ITEMS 4-8 AND 4-9.
9. AFTER REAMING HOLE TO FINISHED SIZE, REMOVE ITEM A1 AND A2 AND INSTALL THE SHIPS FASTENER. REPEAT THE REAMING PROCESS AGAIN 180° FROM THE FIRST HOLE REAMED. WHEN FINISHED WITH THE

(CONT ON SHEET 10)

SIZE	CAGE CODE	WBS	NAVSEA DRAWING NO.	REV
B	–			A
SCALE: NONE	DOC TYPE FX	EB CORP DRAWING NO. S71390168		SHEET 9

07/08/99 16:18

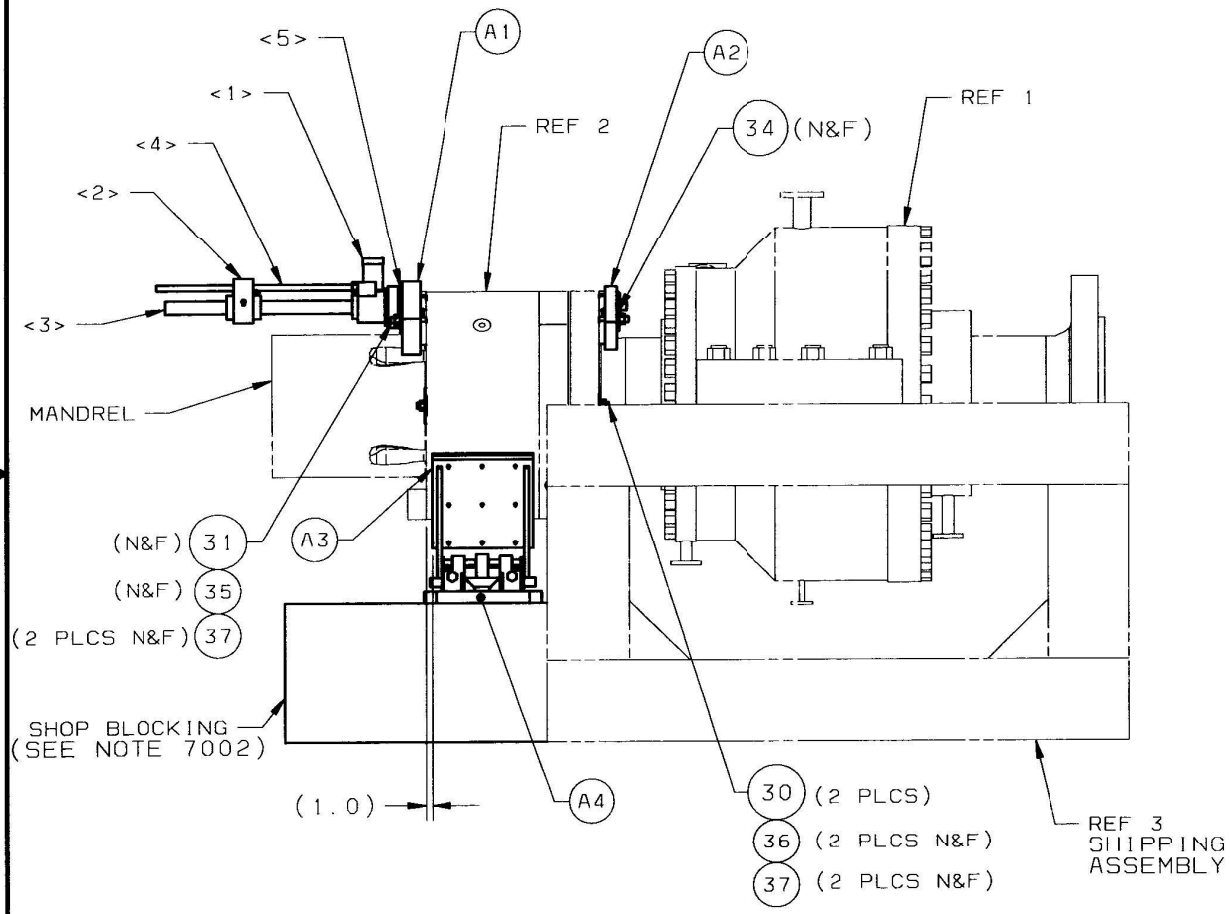

ELEVATION OF KIT 1 INSTALLED

(USAGE VIEWS AND REAMING PROCEDURES)
(ITEMS 4, 29, 32 AND 33 NOT SHOWN)

USAGE NOTES CONT.

(FROM SHEET 9)

9. CONT: SECOND HOLE, REAM ITS ADJACENT HOLES. INSTALL THE SHIPS FASTENERS IN AT LEAST ONE OF THE REAMED HOLES.
10. REMOVE ITEMS 30, 36 AND 37 AND CONTINUE THE REAMING PROCESS ALWAYS LEAVING TWO SHIPS FASTENERS INSTALLED TO MAINTAIN ALIGNMENT OF THE SHAFT AND THE THRUST BEARING.
11. WHEN RELOCATING ITEM A2 TO A LOCATION WHERE THE RETAINING HOLES LINE UP WITH HOLES THAT HAVE BEEN REAMED TO FINAL SIZE REPLACE ITEM 34 WITH ITEM 32.

SIZE	CAGE CODE	WBS	NAVSEA DRAWING NO.	REV
B	–			A
SCALE: NONE	DOC TYPE FX	EB CORP DRAWING NO. S71390168		SHEET 10

06/14/99 17:32

TABLE 11

DET. #	QTY.	PART NO	PART NAME
1	1	SMA1902D1	SHAFT, SHELL REAMER ARBOR
2	1	SMA1902D2	DRIVE COLLAR
3	1	#6 X 2.75	TAPER PIN
4	1	SMA1902D4	12" PILOT EXTENSION
5	1	SMA1902D5	20" PILOT EXTENSION
6	2	SMA1902D6	SHELL REAMER Ø3.125" (END CUT)
7	2	SMA1902D7	SHELL REAMER Ø3.1875" (STEP)
8	1	SMA1902D8	SHELL REAMER Ø3.219" (STEP)
9	1	SMA1902D9	SHELL REAMER Ø3.255" (FINISH)
10	1	SMA1902D10	SHELL REAMER Ø3.275" (SAFETY FINISH)
11	1	SMA1902D11	PLUG SCREW

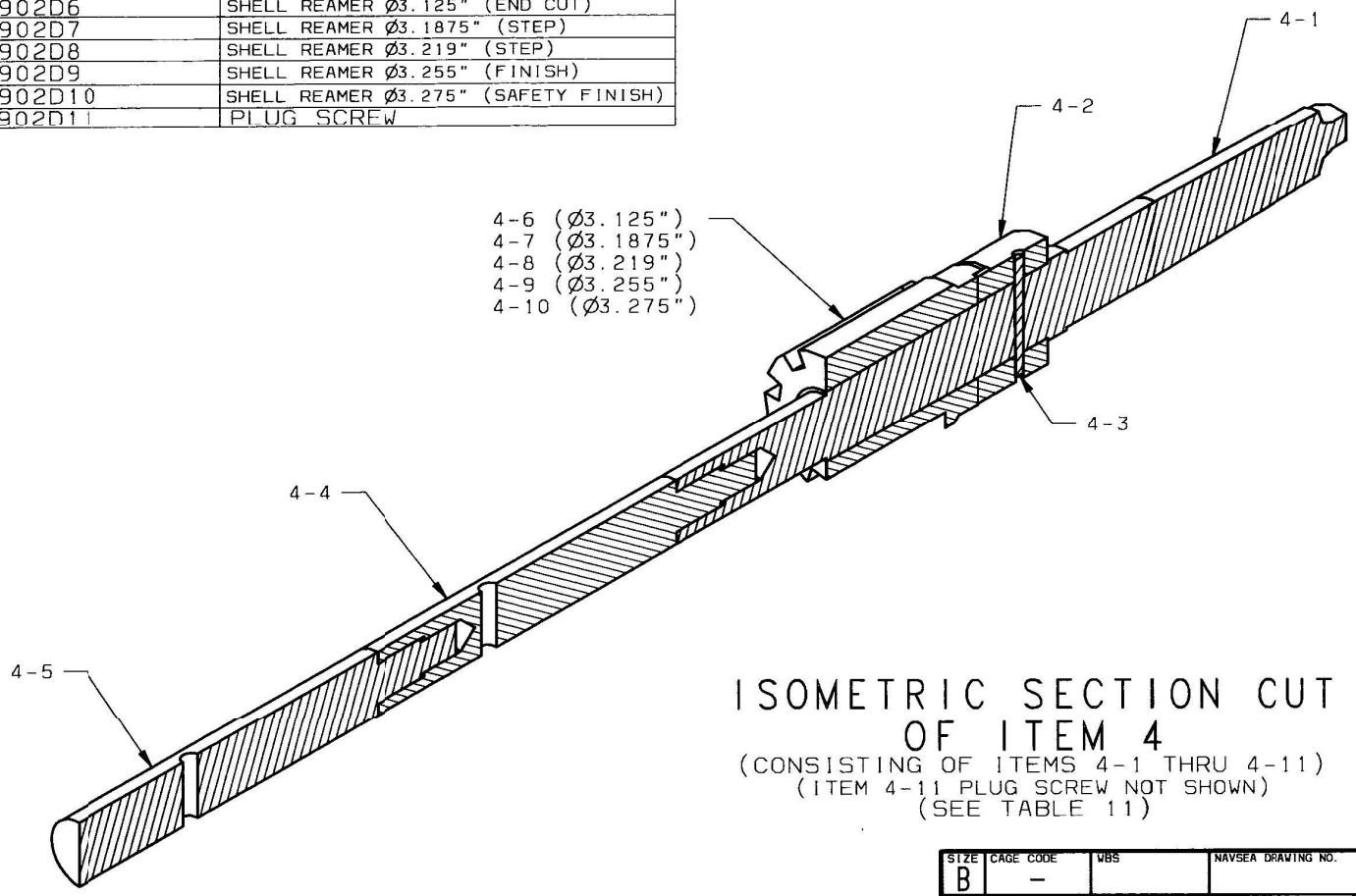

ISOMETRIC SECTION CUT OF ITEM 4
(CONSISTING OF ITEMS 4-1 THRU 4-11)
(ITEM 4-11 PLUG SCREW NOT SHOWN)
(SEE TABLE 11)

SIZE	CAGE CODE	WBS	NAVSEA DRAWING NO.	REV
B	–			A
SCALE: NONE	DOC TYPE FX	EB CORP DRAWING NO. S71390168		SHEET 11

07/08/99 18:27

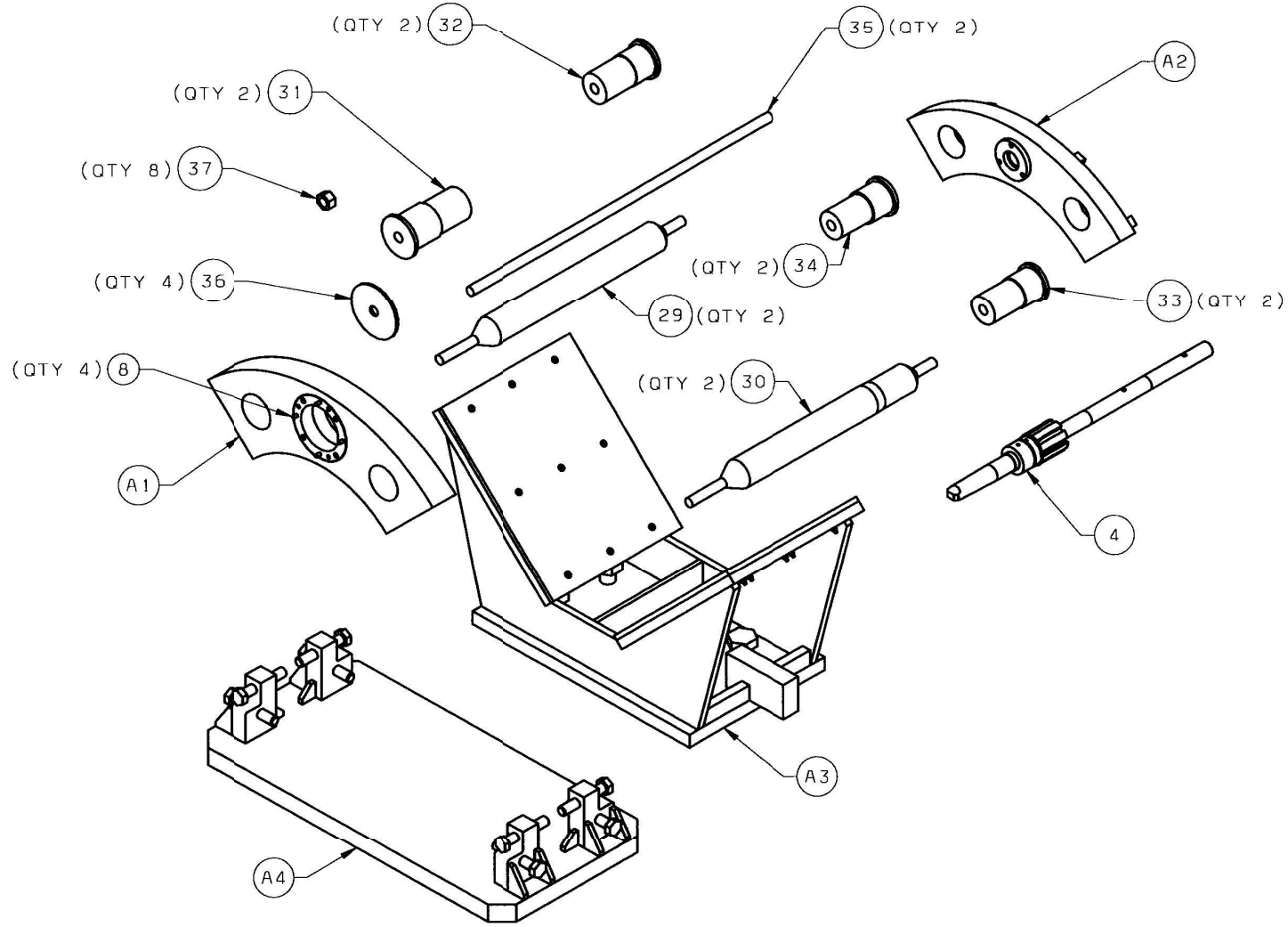

ISOMETRIC OF KIT 1

(SEE NOTE 7003 FOR ITEMS 29 AND 33)

SIZE	CAGE CODE	WBS	NAVSEA DRAWING NO.	REV
B	–			A
SCALE: NONE	DOC TYPE FX	EB CORP DRAWING NO. S71390168		SHEET 12

06/11/99 01:46

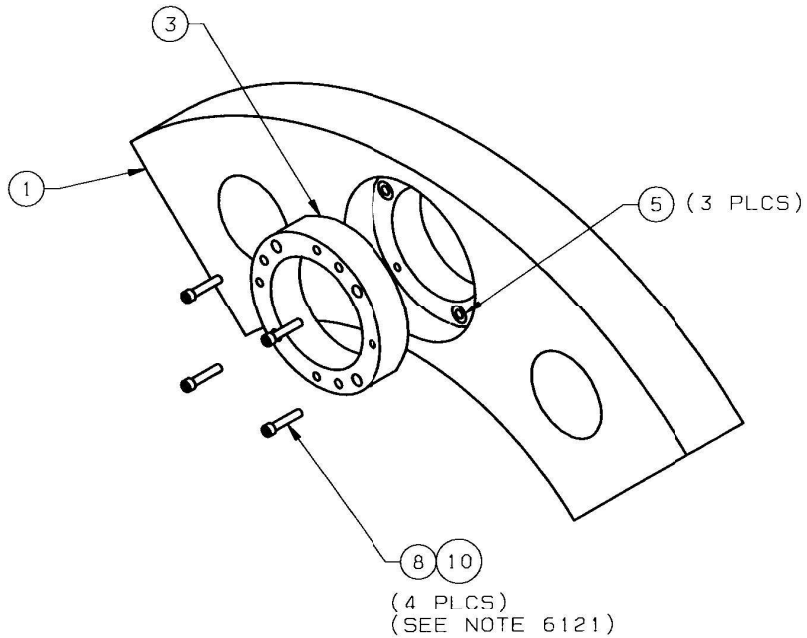

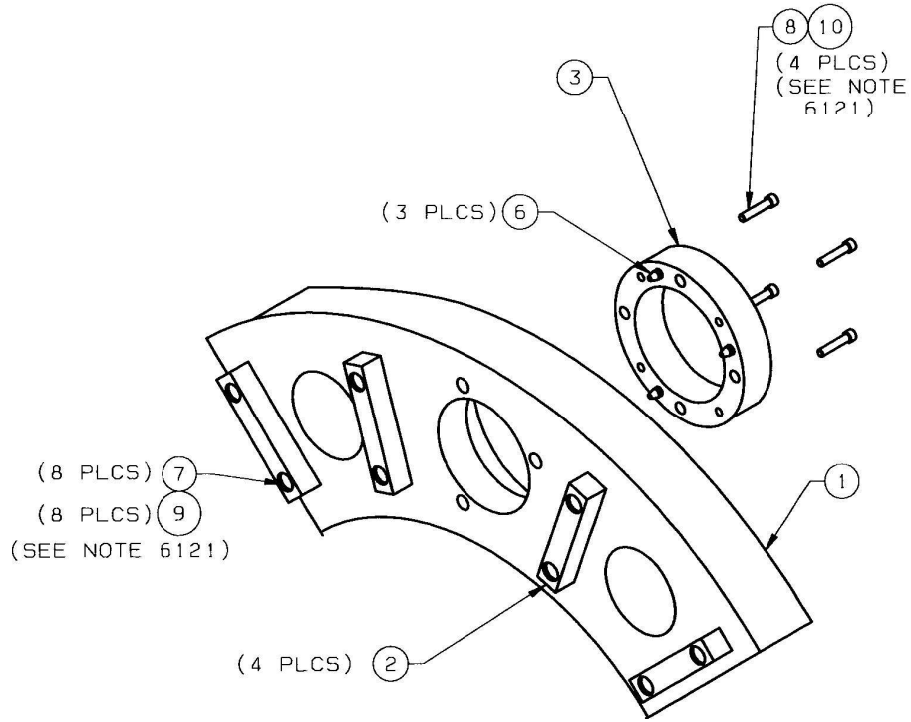

ISOMETRIC OF ITEM A1

SIZE	CAGE CODE	WBS	NAVSEA DRAWING NO.	REV
B	–			A
SCALE: NONE	DOC TYPE FX	EB CORP DRAWING NO. S71390168		SHEET 13

06/28/99 17:56

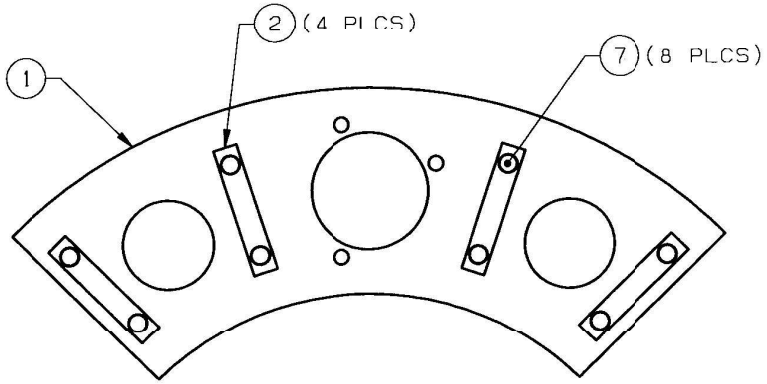

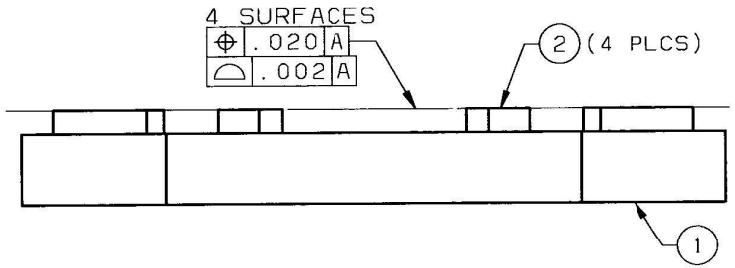

ASSEMBLY OF ITEM A1

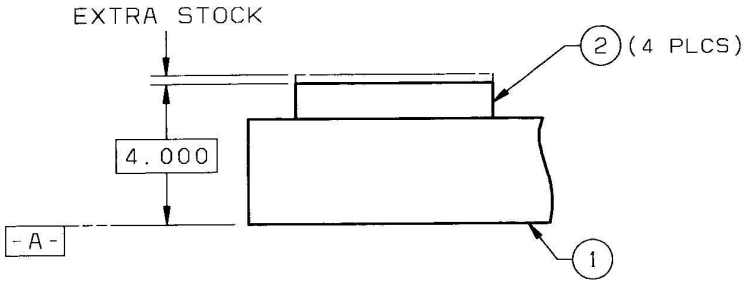

MACHINING DETAIL
OF ITEM A1
(SEE SHT 23 FOR DETAIL OF ITEM 2)

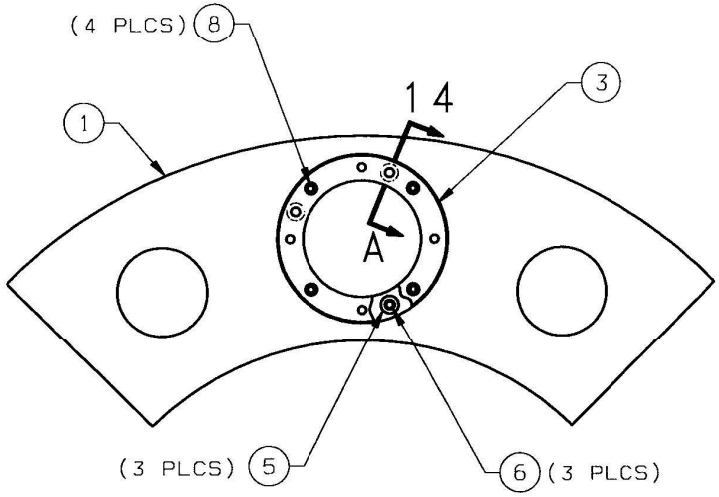

ASSEMBLY OF ITEM A1
(TOP SHOWN)

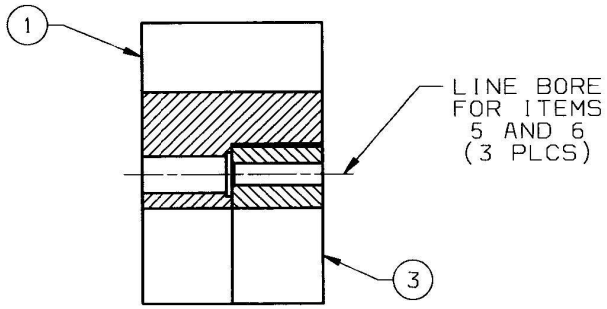

SECTION 14-A
(SHT 14)
(ITEMS 5 AND 6 NOT SHOWN FOR CLARITY)

SIZE	CAGE CODE	WBS	NAVSEA DRAWING NO.	REV
B	–			A

SCALE:	DOC TYPE	EB CORP DRAWING NO.	SHEET
NONE	FX	S71390168	14

07/08/99 18:36

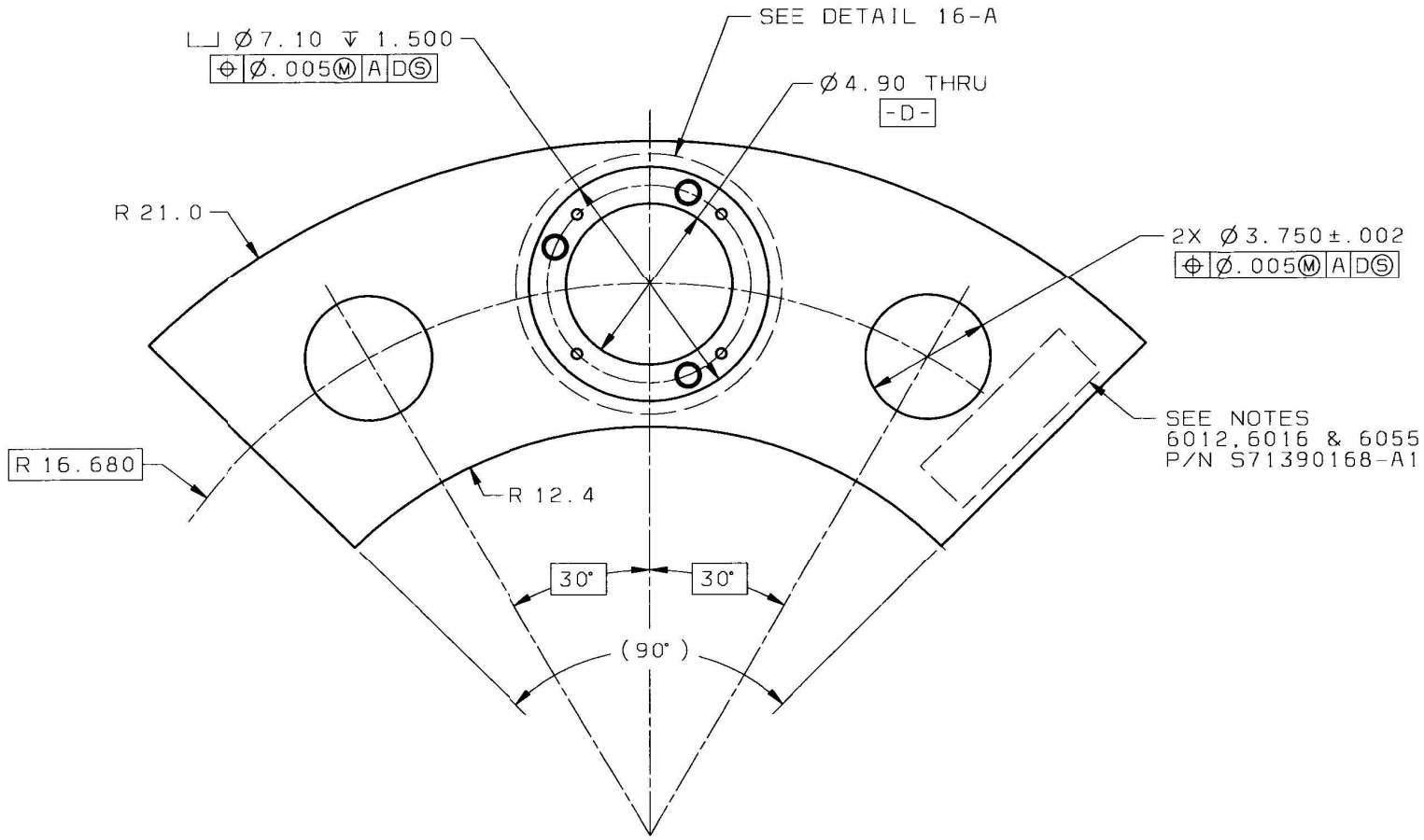

DETAIL OF ITEM 1

(TOP SHOWN)

SIZE	CAGE CODE	WBS	NAVSEA DRAWING NO.	REV
B	–			A
SCALE: NONE	DOC TYPE FX	EB CORP DRAWING NO. S71390168		SHEET 15

06/08/99 21:27

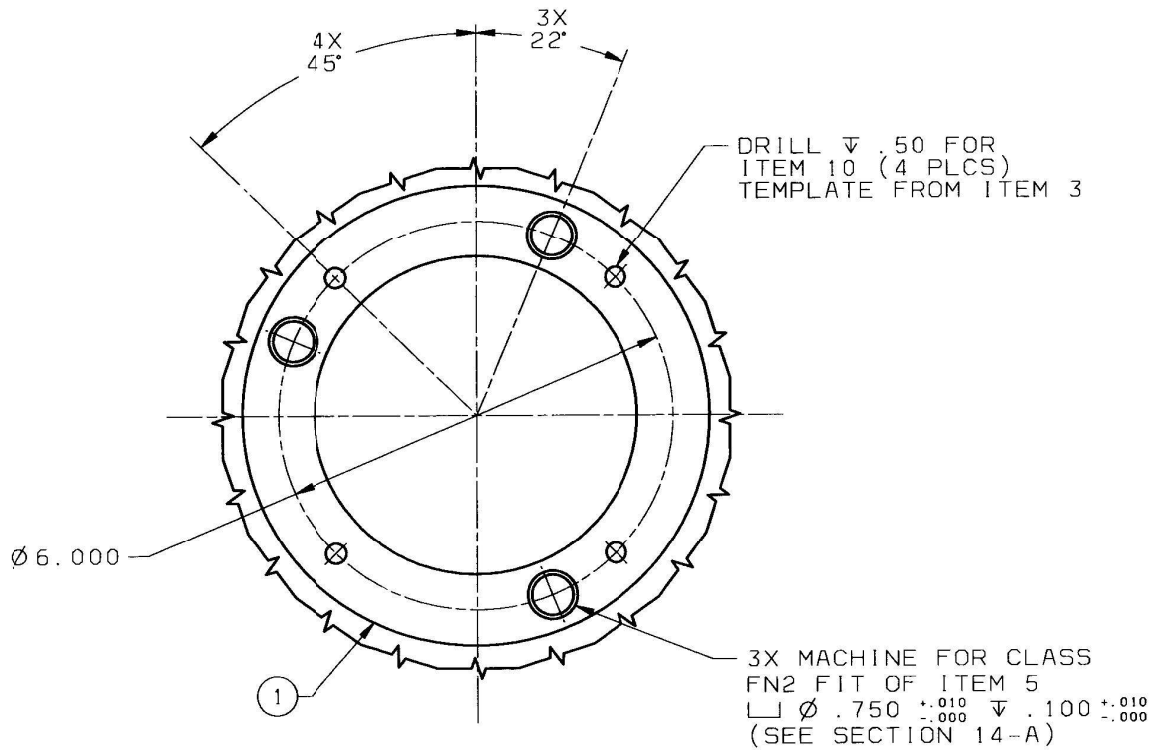

DETAIL 16-A

(SHT 15)

SIZE	CAGE CODE	WBS	NAVSEA DRAWING NO.	REV
B	–			A
SCALE: NONE	DOC TYPE FX	EB CORP DRAWING NO. S71390168		SHEET 16

07/08/99 19:11

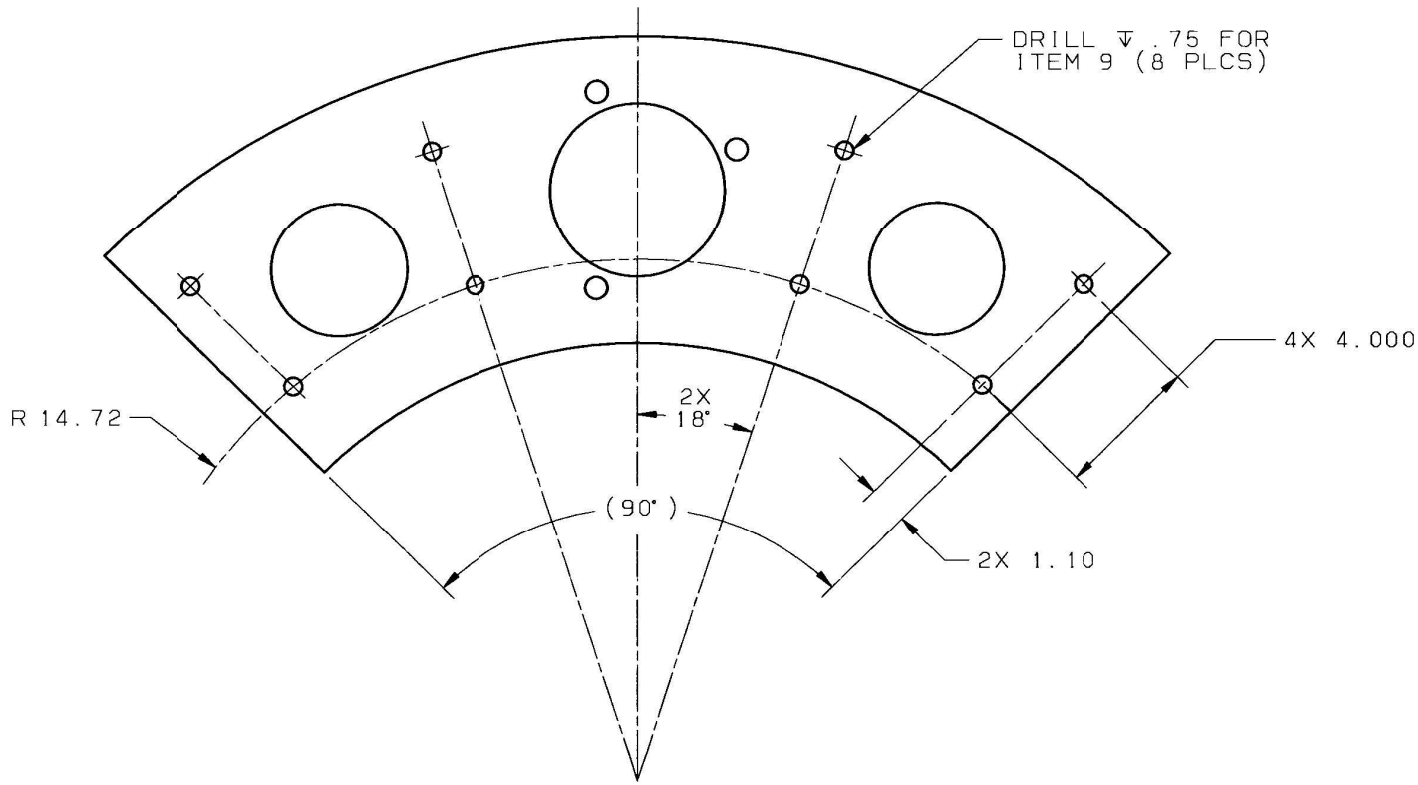

DETAIL OF ITEM 1

(BOTTOM SIDE SHOWN)

SIZE	CAGE CODE	WBS	NAVSEA DRAWING NO.	REV
B	–			A
SCALE: NONE	DOC TYPE FX	EB CORP DRAWING NO. S71390168		SHEET 17

06/08/99 21:36

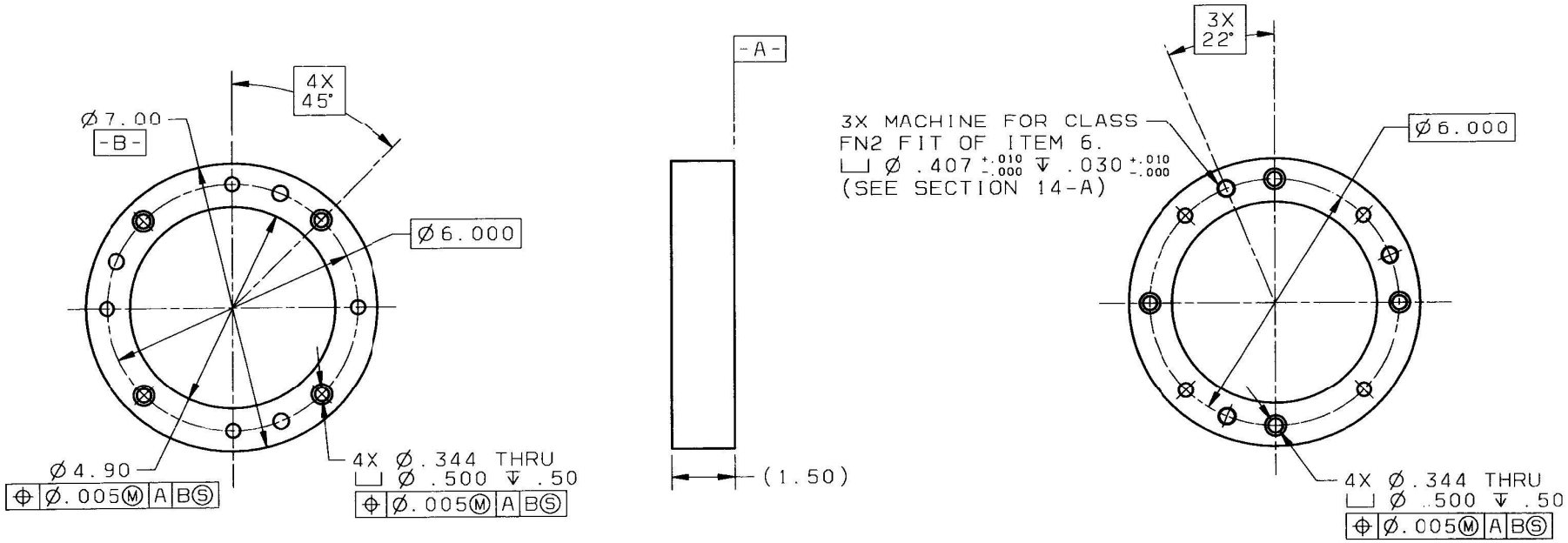

DETAIL OF ITEM 3

SIZE	CAGE CODE	VBS	NAVSEA DRAWING NO.	REV
B	–			A
SCALE: NONE	DOC TYPE FX	EB CORP DRAWING NO. S71390168		SHEET 18

07/08/99 19:34

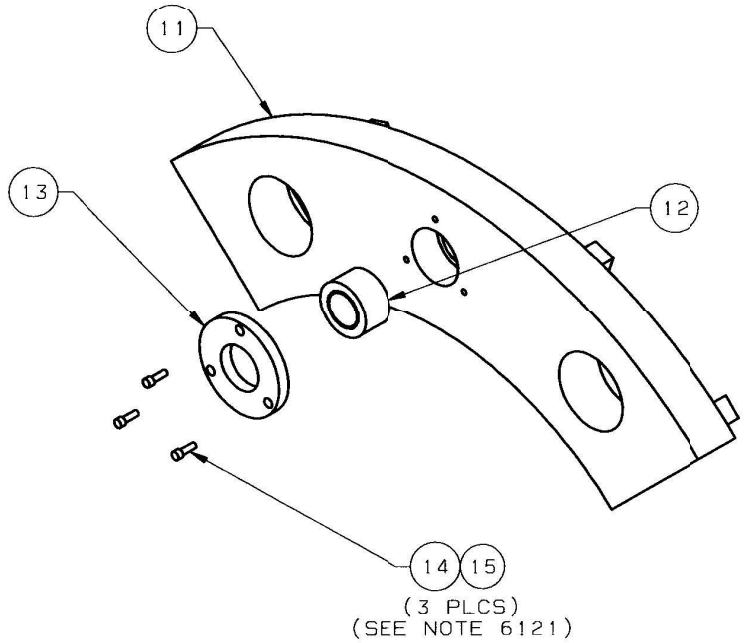

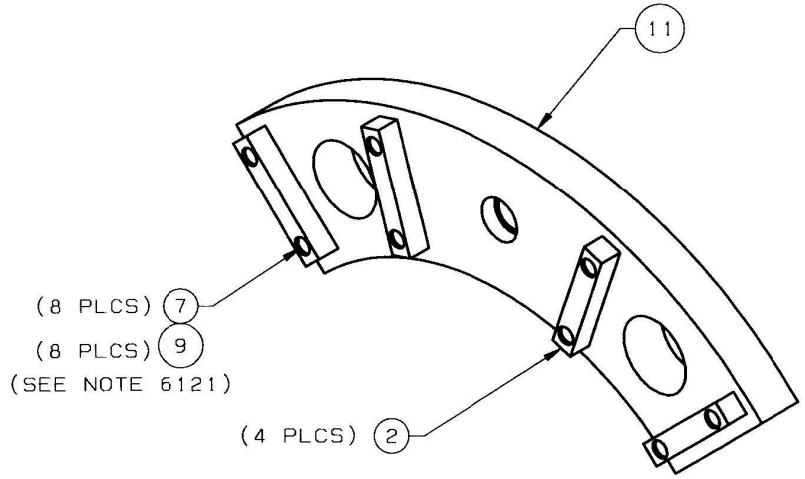

ISOMETRIC OF ITEM A2

SIZE	CAGE CODE	WBS	NAVSEA DRAWING NO.	REV
B	–			A
SCALE: NONE	DOC TYPE FX	EB CORP DRAWING NO. S71390168		SHEET 19

06/08/99 21:43

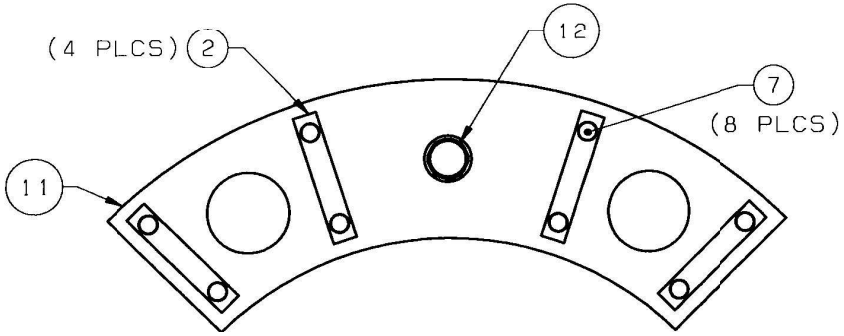

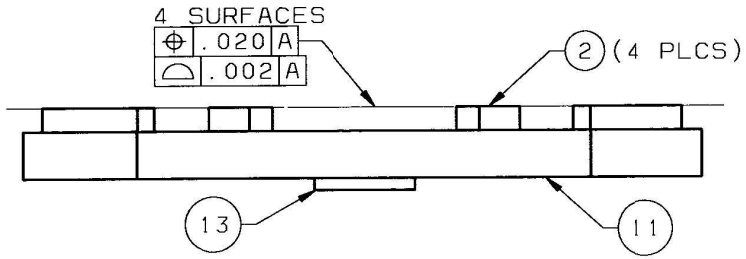

ASSEMBLY OF ITEM A2
(TOP SHOWN)

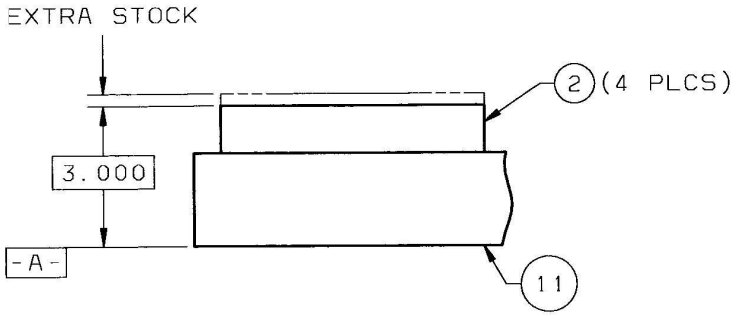

MACHINING DETAIL
OF ITEM A2

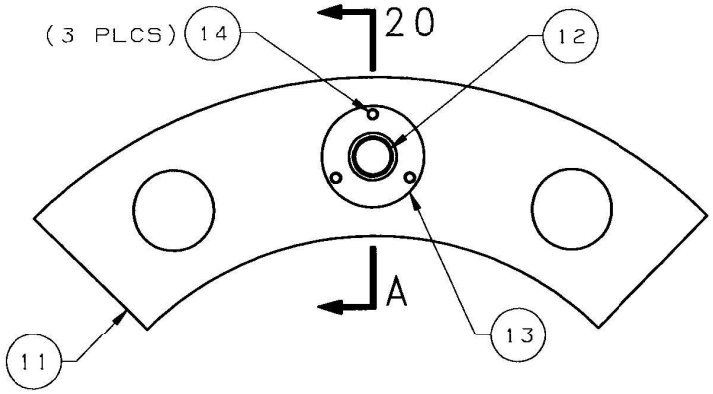

ASSEMBLY OF ITEM A2
(BOTTOM SHOWN)

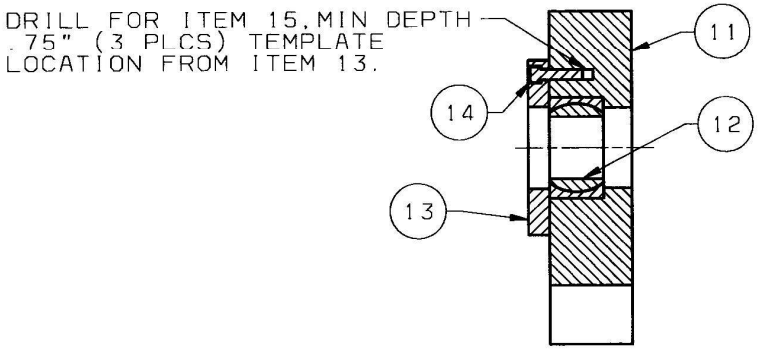

SECTION 20-A
(SHT 20)

SIZE	CAGE CODE	VBS	NAVSEA DRAWING NO.	REV
B	–			A
SCALE: NONE	DOC TYPE FX	EB CORP DRAWING NO. S71390168		SHEET 20

07/08/99 19:47

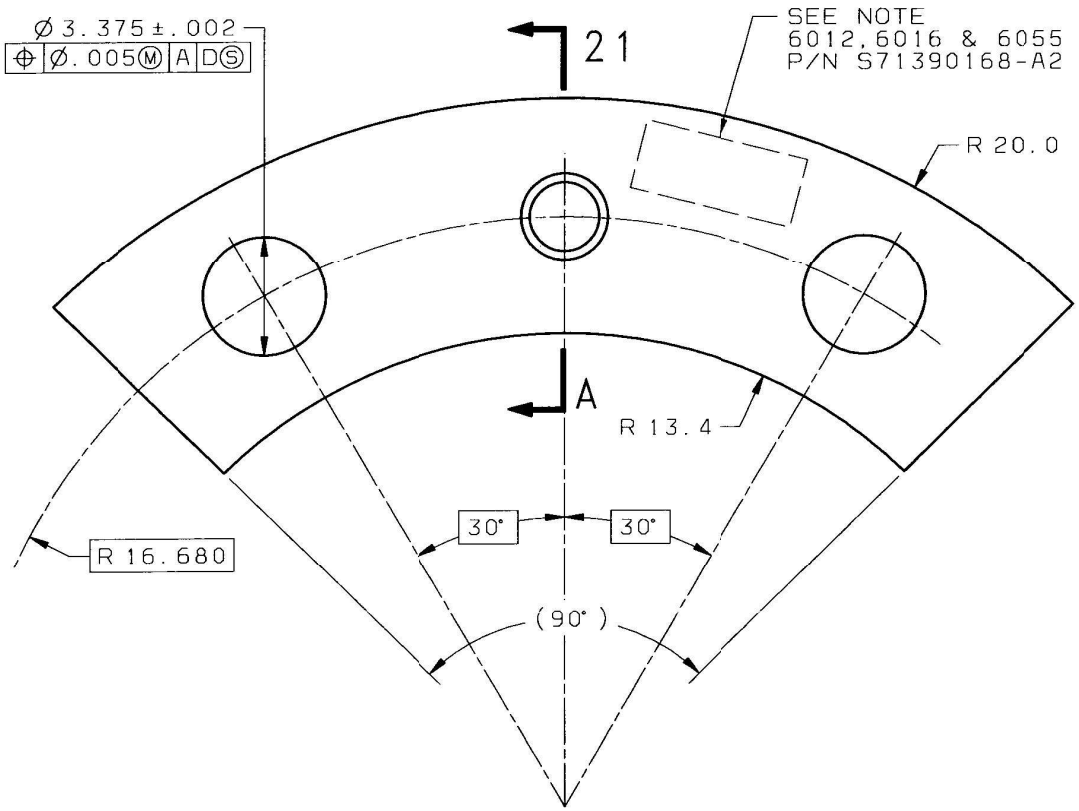

DETAIL OF ITEM 11
(BOTTOM SHOWN)

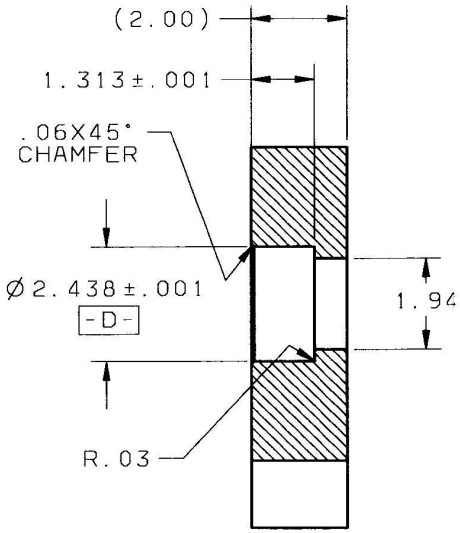

SECTION 21-A
(SHT 21)

SIZE	CAGE CODE	WBS	NAVSEA DRAWING NO.	REV
B	–			A
SCALE: NONE	DOC TYPE FX	EB CORP DRAWING NO. S71390168		SHEET 21

06/08/99 21:57

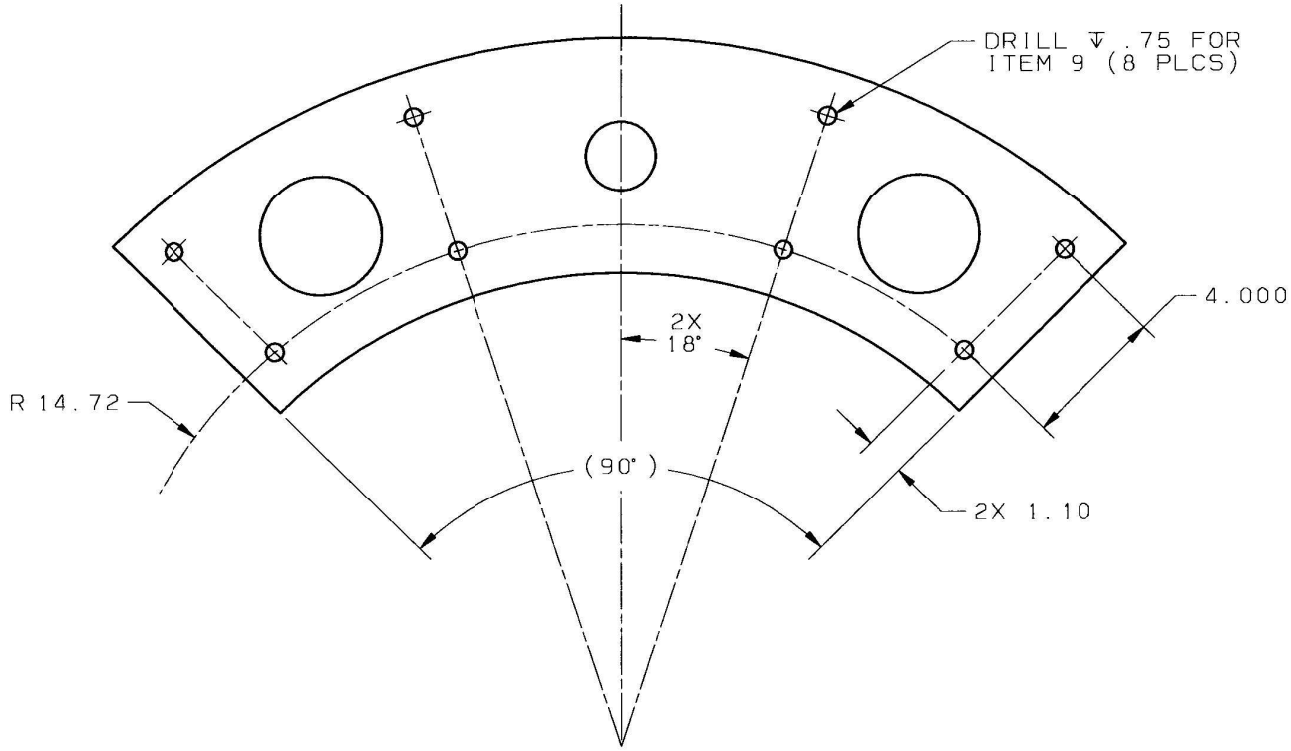

DETAIL OF ITEM 11

(TOP SHOWN)

SIZE	CAGE CODE	WBS	NAVSEA DRAWING NO.	REV
B	–			A
SCALE: NONE	DOC TYPE FX	EB CORP DRAWING NO. S71390168		SHEET 22

06/08/99 22:00

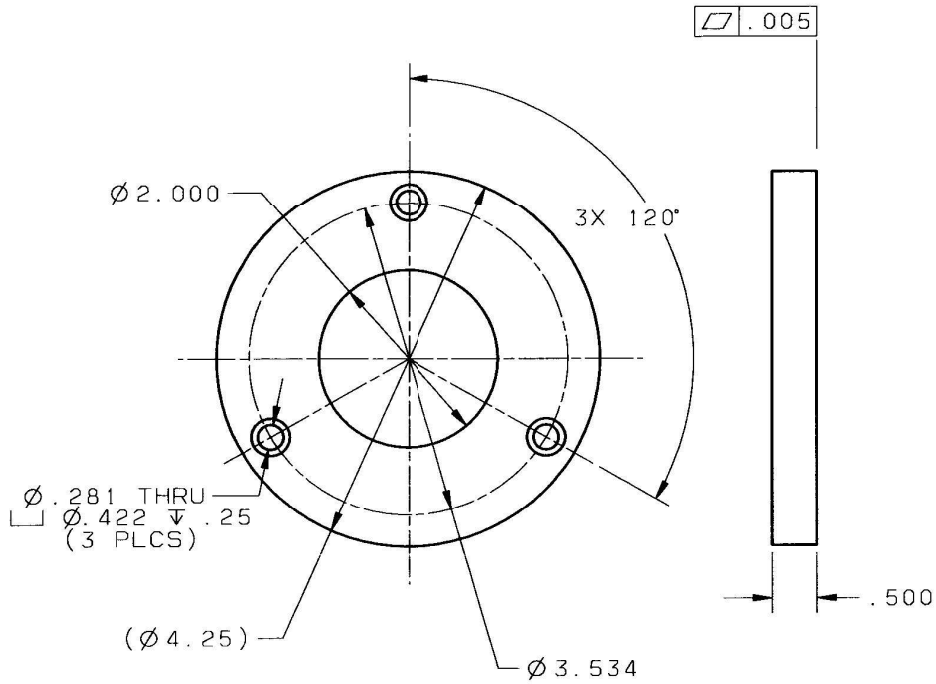

DETAIL OF ITEM 13

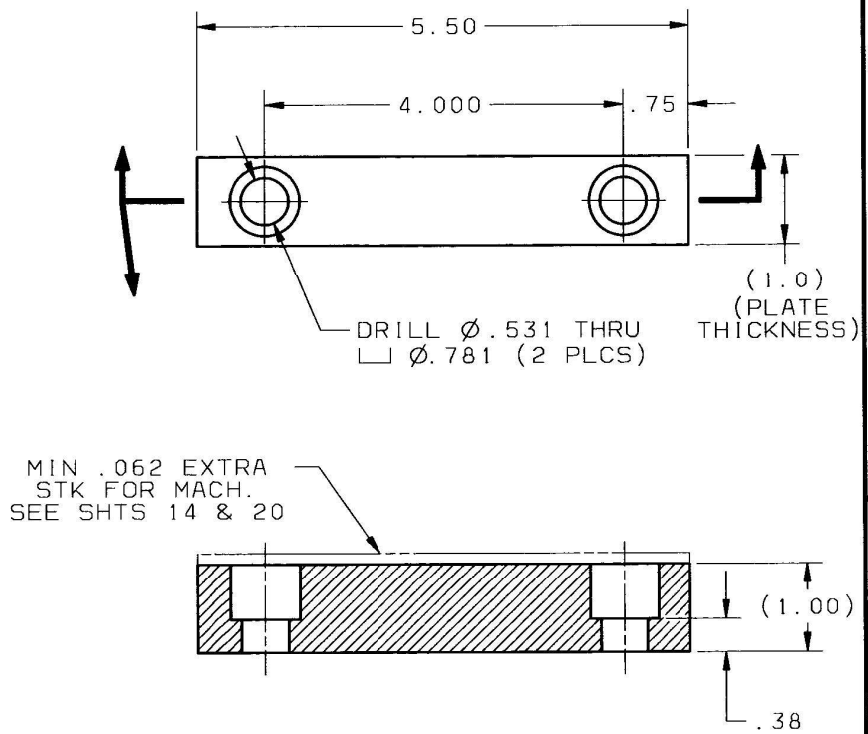

DETAIL OF ITEM 2

SIZE	CAGE CODE	WBS	NAVSEA DRAWING NO.	REV
B	–			A
SCALE: NONE	DOC TYPE FX	EB CORP DRAWING NO. S71390168		SHEET 23

07/08/99 19:53

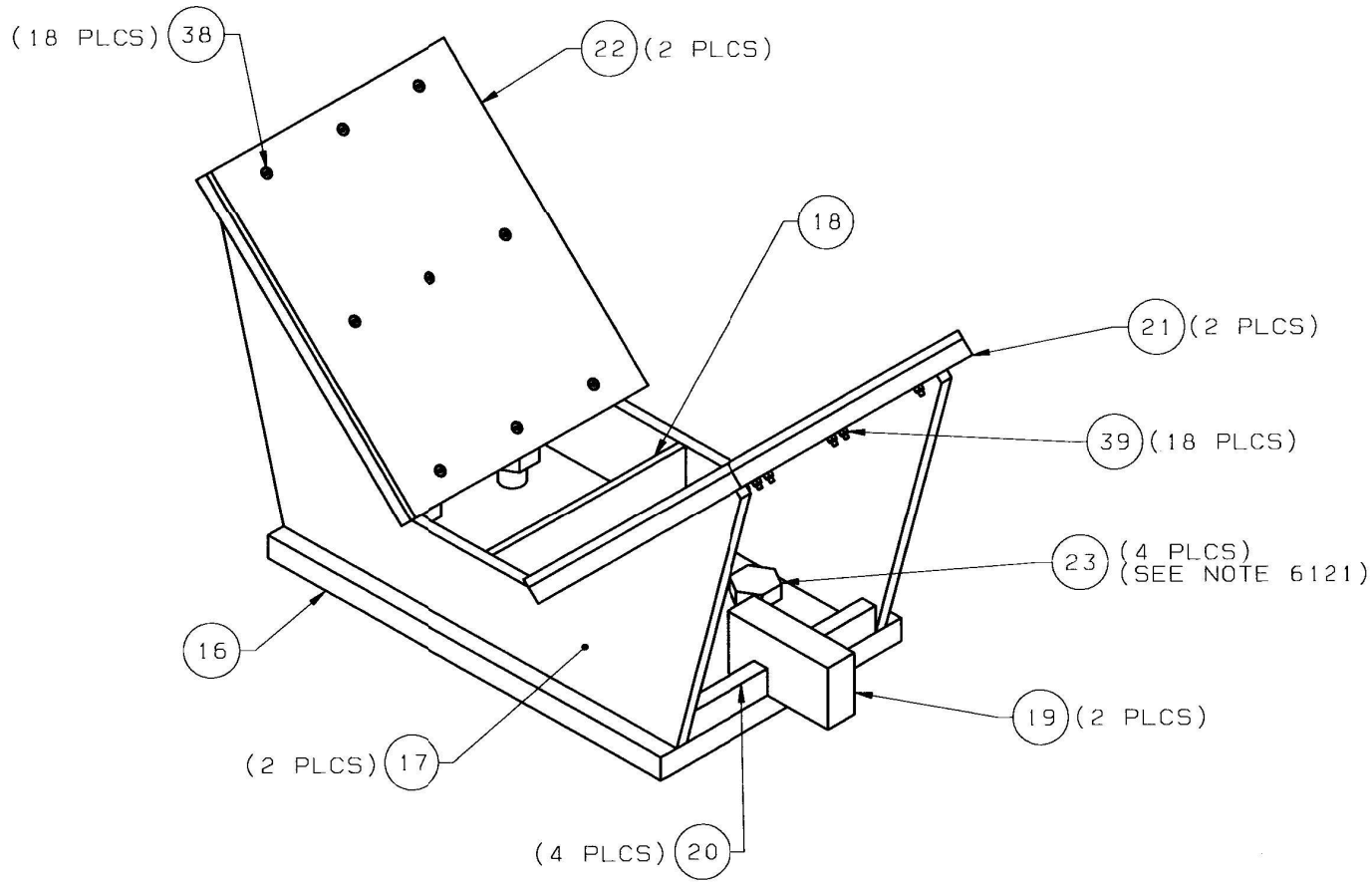

ISOMETRIC OF ITEM A3

SIZE	CAGE CODE	WBS	NAVSEA DRAWING NO.	REV
B	–			A
SCALE: NONE	DOC TYPE FX	EB CORP DRAWING NO. S71390168		SHEET 24

06/17/99 19:14

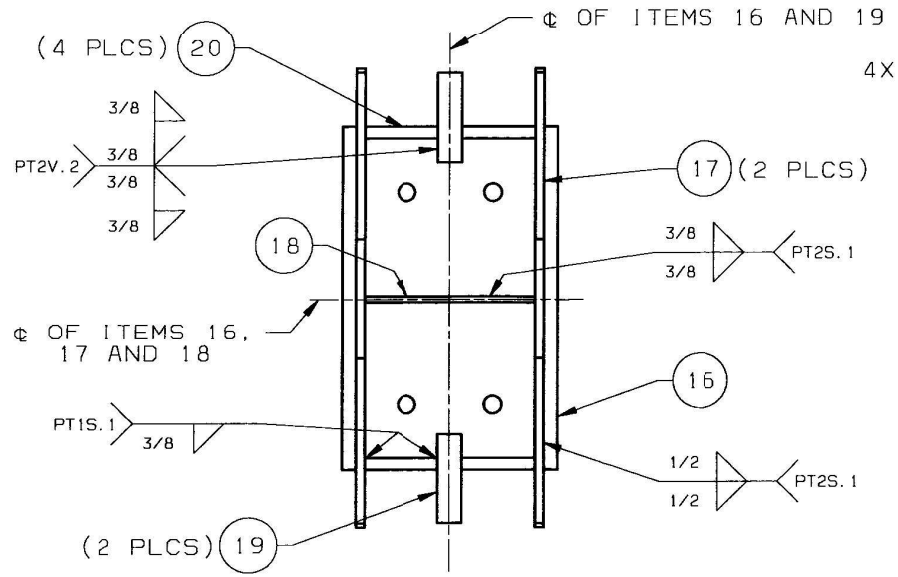

(ITEMS 21, 22, 38 AND 39 NOT SHOWN)

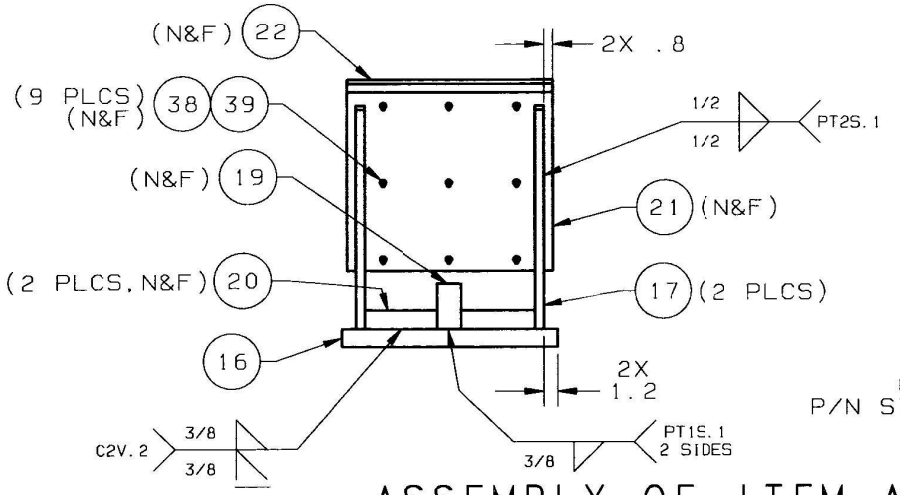

ASSEMBLY OF ITEM A3

(ITEM 23 NOT SHOWN FOR CLARITY)

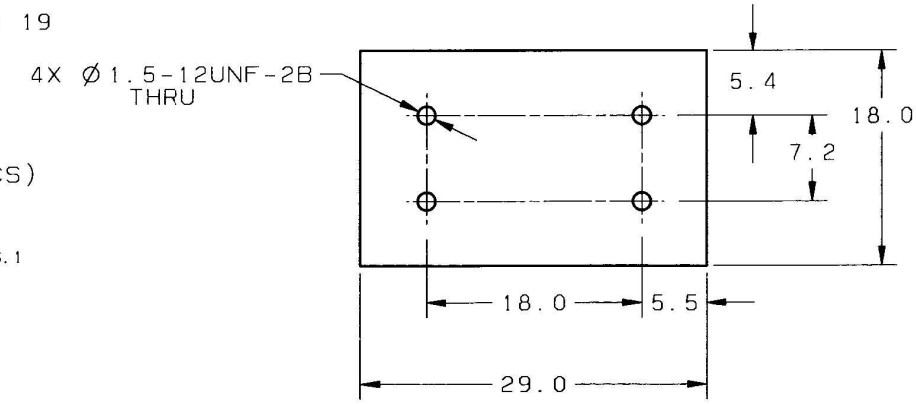

DETAIL OF ITEM 16

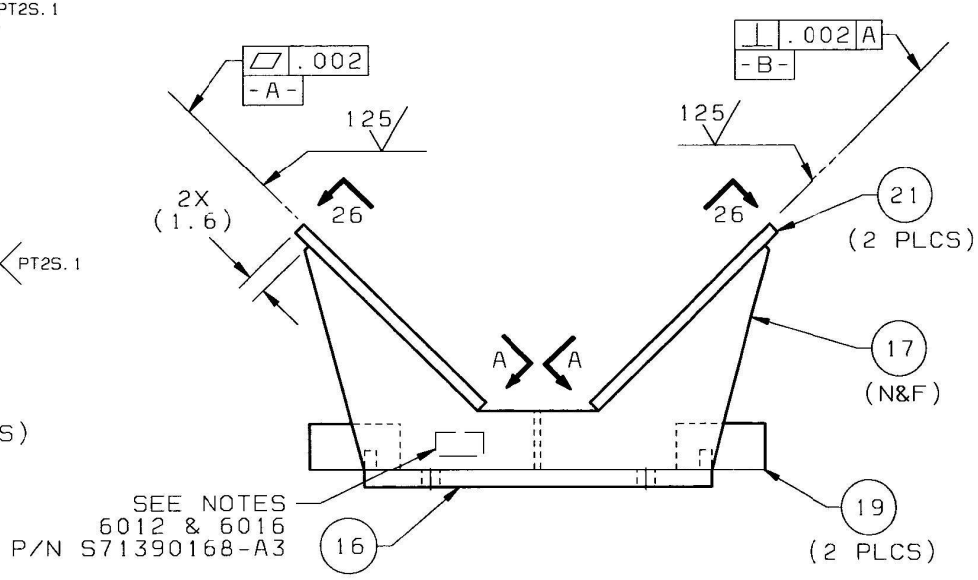

SIZE	CAGE CODE	WBS	NAVSEA DRAWING NO.	REV
B	–			A
SCALE: NONE	DOC TYPE FX	EB CORP DRAWING NO. S71390168		SHEET 25

07/08/99 20:06

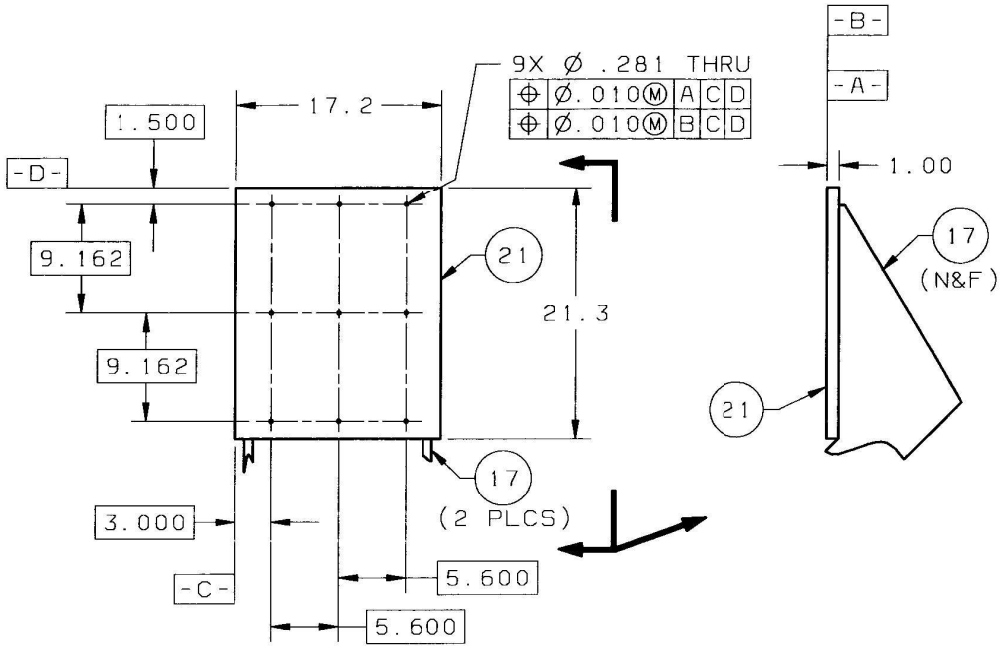

VIEW 26-A
(SHT 25)

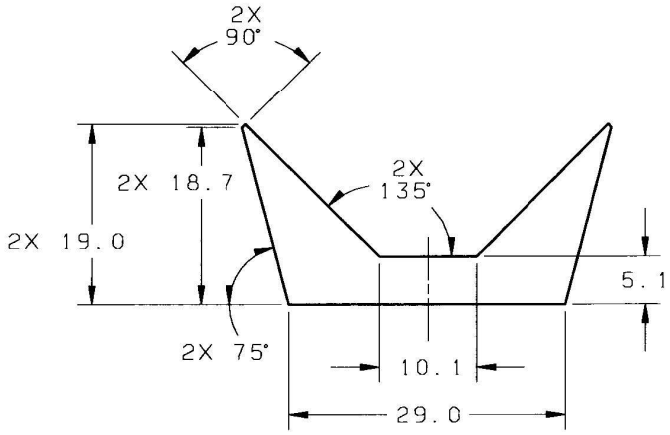

DETAIL OF
ITEM 17

SIZE	CAGE CODE	WBS	NAVSEA DRAWING NO.	REV
B	–			A
SCALE: NONE	DOC TYPE FX	EB CORP DRAWING NO. S71390168		SHEET 26

06/28/99 18:12

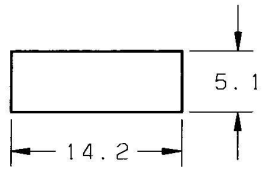

DETAIL OF
ITEM 18

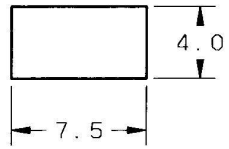

DETAIL OF
ITEM 19

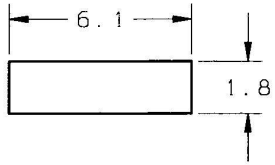

DETAIL OF
ITEM 20

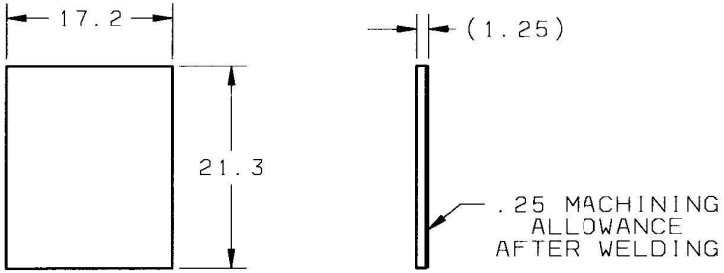

DETAIL OF
ITEM 21

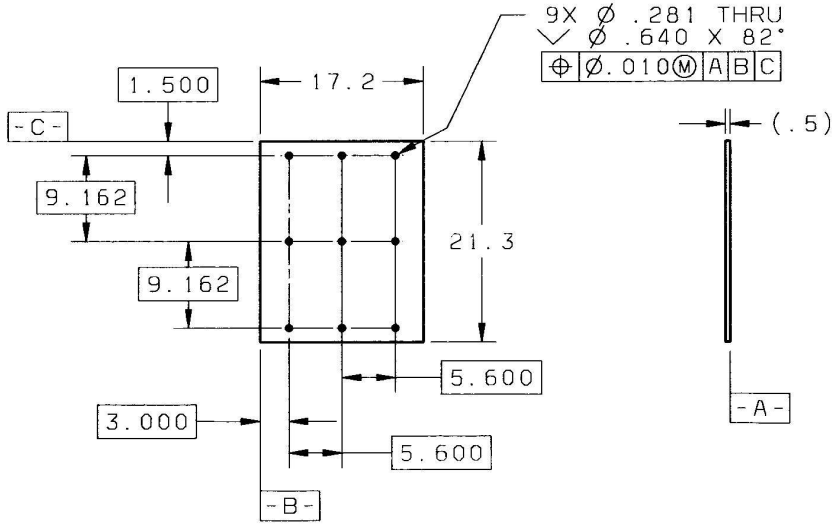

DETAIL OF
ITEM 22

SIZE	CAGE CODE	WBS	NAVSEA DRAWING NO.	REV
B	–			A
SCALE: NONE	DOC TYPE FX	EB CORP DRAWING NO. S71390168		SHEET 27

06/28/99 18:16

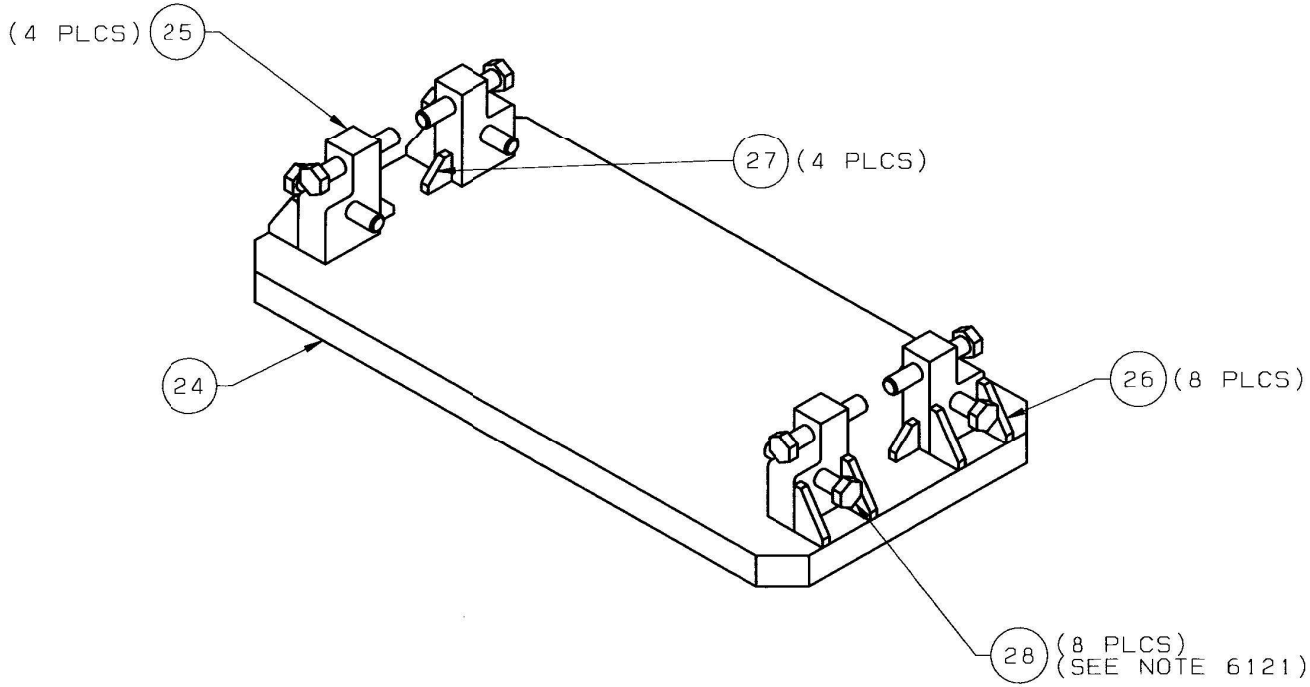

ISOMETRIC OF ITEM A4

SIZE	CAGE CODE	WBS	NAVSEA DRAWING NO.	REV
B	–			A
SCALE: NONE	DOC TYPE FX	EB CORP DRAWING NO. S71390168		SHEET 28

06/11/99 18:00

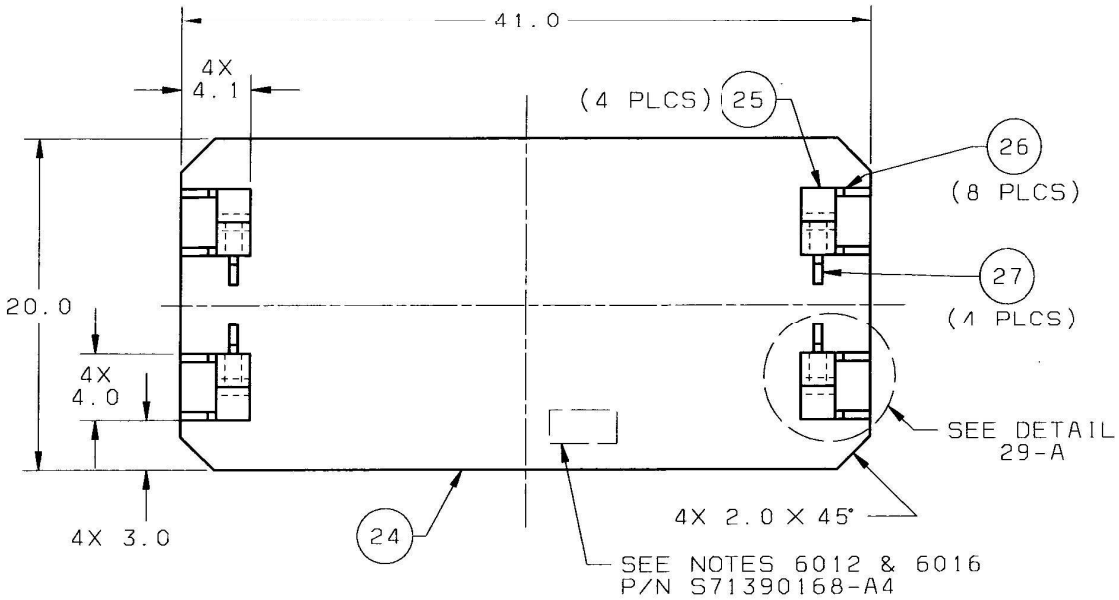

ASSEMBLY OF ITEM A4
(ITEM 28 NOT SHOWN FOR CLARITY)

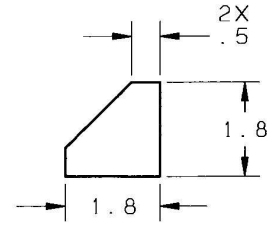

DETAIL OF
ITEM 27

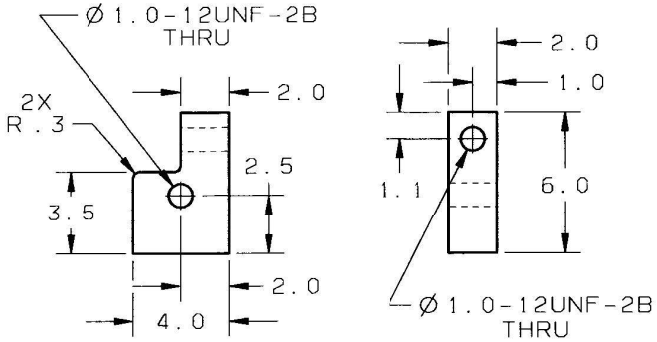

DETAIL OF
ITEM 25

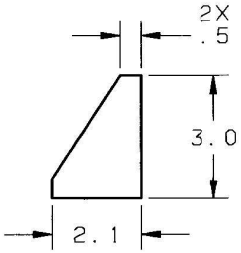

DETAIL OF
ITEM 26

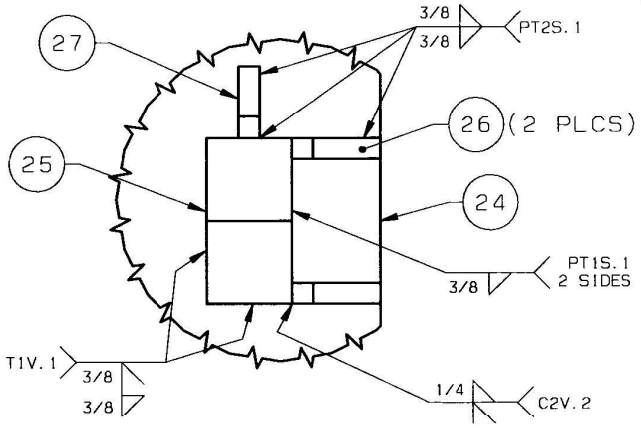

DETAIL 29-A
(TYPICAL WELD DETAIL 4 PLACES)
(SHT 29)

SIZE	CAGE CODE	WBS	NAVSEA DRAWING NO.	REV
B	–			A
SCALE: NONE	DOC TYPE FX	EB CORP DRAWING NO. S71390168		SHEET 29

06/11/99 17:58

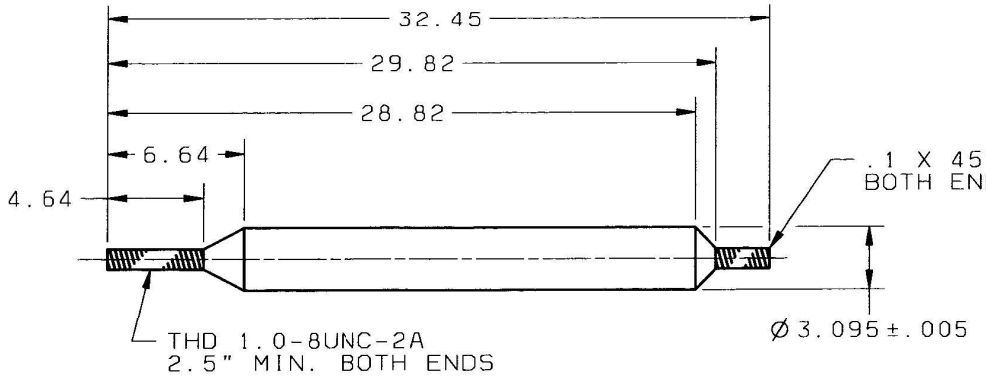

DETAIL OF ITEM 29

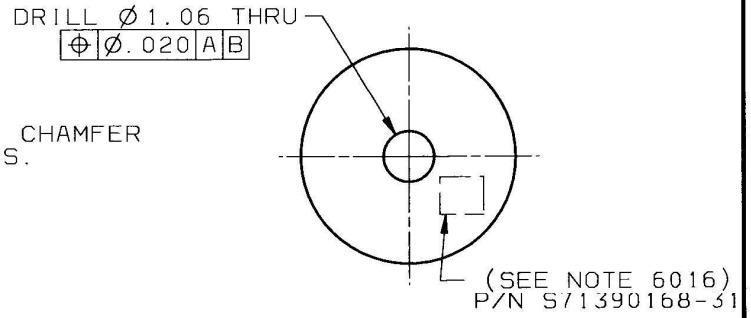

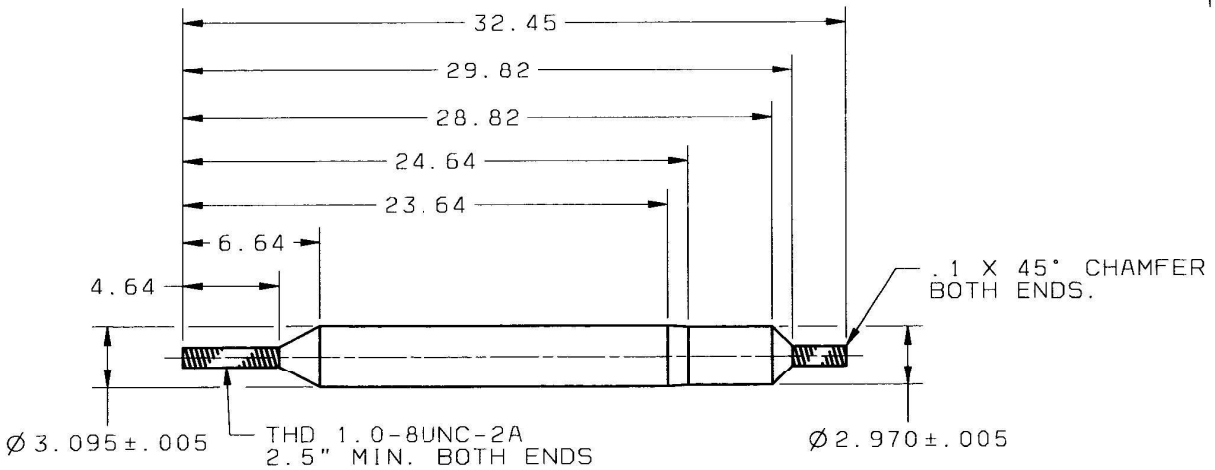

DETAIL OF ITEM 30

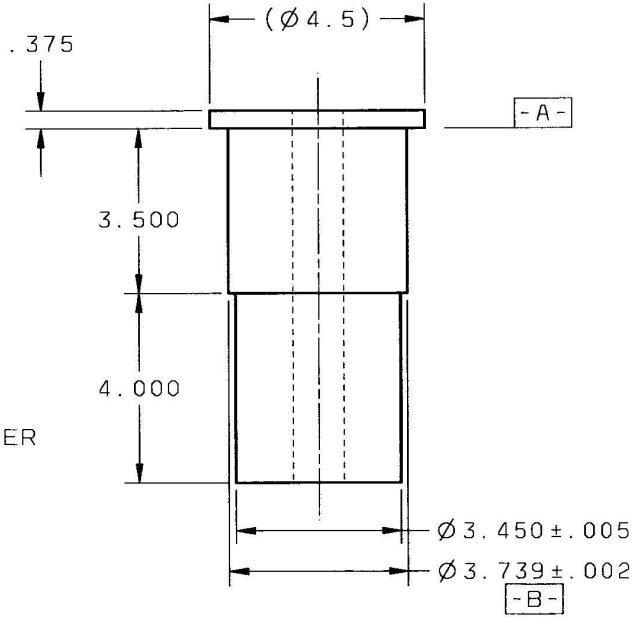

DETAIL OF ITEM 31

SIZE	CAGE CODE	WBS	NAVSEA DRAWING NO.	REV
B	-			A
SCALE: NONE	DOC TYPE FX	EB CORP DRAWING NO. S71390168		SHEET 30

07/08/99 21:02

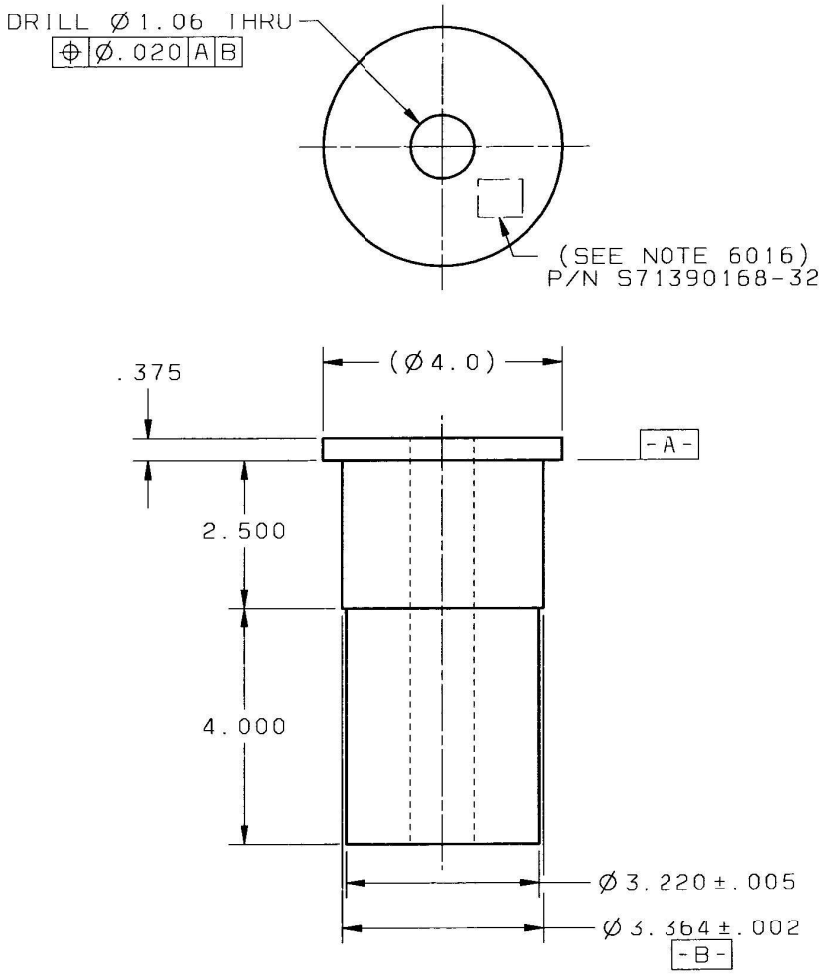

DETAIL OF ITEM 32

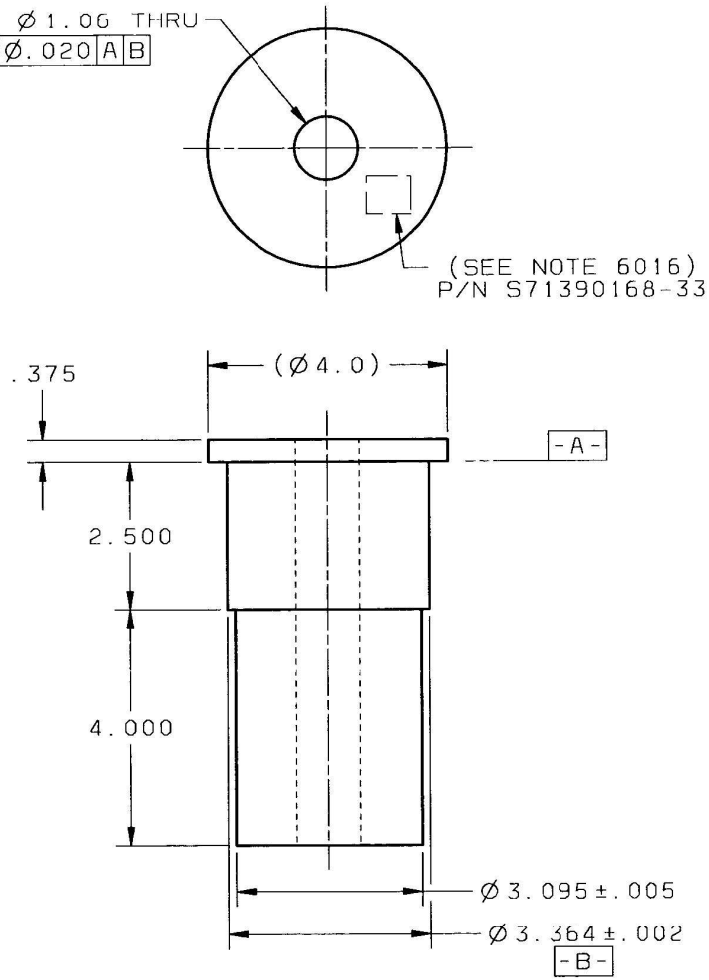

DETAIL OF ITEM 33

SIZE	CAGE CODE	WBS	NAVSEA DRAWING NO.	REV
B	–			A
SCALE: NONE	DOC TYPE FX	EB CORP DRAWING NO. S71390168		SHEET 31

07/08/99 21:08

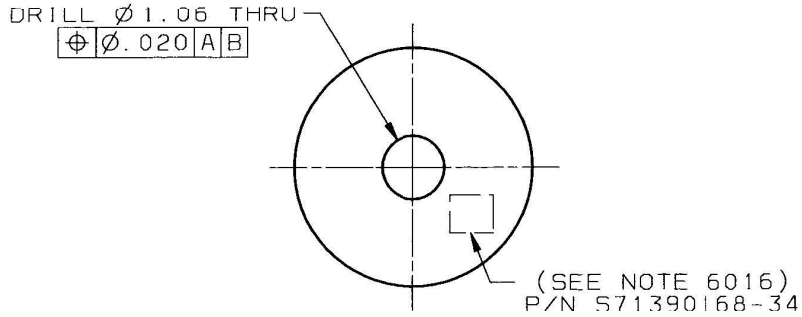

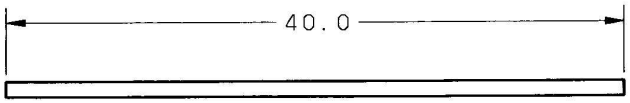

DETAIL OF ITEM 35

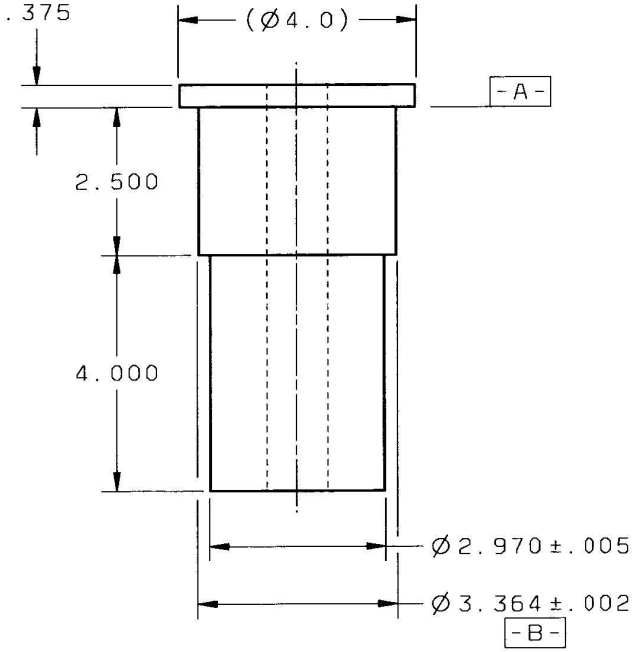

DETAIL OF ITEM 34

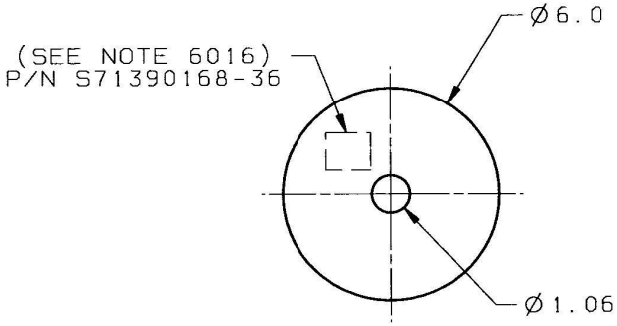

DETAIL OF ITEM 36

SIZE	CAGE CODE	WBS	NAVSEA DRAWING NO.	REV
B	–			A
SCALE: NONE	DOC TYPE FX	EB CORP DRAWING NO. S71390168		SHEET 32

07/08/99 21:15