GREAT SMOKY MOUNTAINS NATIONAL PARK

Newfound Gap Wastewater Rehabilitation Project

Date: October 23, 2024

PMIS 304884

The Great Smoky Mountains National Park
Newfound Gap Wastewater System Rehabilitation Project
Gatlinburg, TN 37738

PMIS # 304884

October 23, 2024

Table of Contents

Specification Section	**Issued**
Division 1 – General Requirements	
Section 01100 – Summary of Work	Award
Section 01270 – Price and Payment	Award
Section 01310 – Project Management and Coordination	Award
Section 01330 – Submittal Procedure	Award
Section 01430 – Quality Assurance	Award
Section 01600 – Materials and Equipment	Award
Section 01770 – Project Closeout	Award
Division 2 – Site Work	
Section 02110 – Site Clearing	Award
Section 02315 – Excavation, Trenching, and Backfill	Award
Section 02370 – Temporary Erosion Control	Award
Section 02372 – Environmental Protection	Award
Section 02530 – Sanitary Sewer	Award
Section 02532 – Sewer Manholes	Award
Section 02920 – Topsoiling, Seeding, Fertilizing	Award
Section 02958 – Pipe Bursting	Award
Division 03 –Concrete	
Section 03300 – Cast in Place Concrete (Non-Structural)	Award

SECTION 01100
SUMMARY OF WORK

PART 1 - GENERAL

1.01 SUMMARY

A. The work to be performed under this contract shall consist of furnishing the following to perform the work outlined in these specifications and as indicated by Project Drawings (133/60155):

1. tools
2. equipment
3. materials
4. labor
5. supplies
6. manufactured articles
7. all transportation to complete the work
8. temporary facilities

B. Location of Work: Newfound Gap Overlook Area, Great Smoky Mountains National Park.

C. Incidental Items: All work, materials, and services not expressly listed as being provided by others or not expressly called for in the contract but are necessary for the completion of the work in good faith, shall be furnished, installed, and performed by the contractor.

1.02 BACKGROUND

A. The Newfound Gap Overlook Area is one of the oldest areas in the Park. The Newfound Gap Wastewater System was designed and built in the late 1930's during the early years of Great Smoky Mountains National Park. This system serves the Newfound Gap rest area, which resides at the top (elevation) of Newfound Gap Road at the Tennessee and North Carolina border. It is also the highest elevation point along the entire Appalachian Trail. This area is a primary destination location in the middle of the park offering stunning views of the surrounding mountains to millions of visitors each year.

The picnic area was constructed in the early 1960's and underwent a renovation in the late 1990's. Little has changed in the systems distribution system and upgrades are needed for more efficient operation.

1.03 SCHEDULING

A. The Newfound Gap Overlook comfort station open year-round. The proposed work will be done while the comfort station is in use; therefore, the contractor shall either maintain operation or provide temporary toilet facilities. The contractor is expected to be courteous to the Park's visitors; and provide appropriate barriers and protection.

1.04 SUMMARY OF WORK TO BE DONE BY CONTRACTOR

A. Sewer System Improvements

1. Provide and install a new 5,000-gallon septic tank as illustrated on the design plans.

2. Provide and install new manholes and sewer pipe as illustrated on the plans.

3. Pipe-burst and line the existing 6" main line sanitary sewer with 6" HDPE, SDR 26 pipe.

4. Provide and install a new flow diversion structure to provide alternating use of the existing and proposed septic tanks.

5. Install 2 new dosing siphons in the existing dosing tank.

6. Install new precast concrete (or cast-in-place) lids and an aluminum access hatch on the existing dosing tank.

7. Replace the plastic valve box lids with cast-iron lids.

8. Remove the existing chain link fence and install a new chain link fence. A 12-foot wide vehicle gate and a 4-foot wide man-gate shall also be provided.

9. Restore all disturbed areas, and hydroseed with the approved Park seed mix.

1.05 SPECIAL CONSTRUCTION REQUIREMENTS

A. The Great Smoky Mountains National Park is a visitor friendly environment.

1. Provide barriers to protect the public and control visitor access.
2. Coordinate with Park when commercial vehicles will enter the Park.

1.06 SAFETY

A. The contractor shall provide a Safety Plan prior to the commencement of work. The Safety Plan shall address employee safety practices for all phases of the proposed work; and shall be accessible to all on-site personnel.

B. All aspects of jobsite safety are the responsibility of the contractor. Sub-contractors, regardless of being an excluded party (i.e. owner of company), are required to follow all Federal, State, and Local safety laws. This includes, but is not limited to:
   1. Fall Protection
   2. Trench Safety
   3. Hard hats
   4. Eye Protection

1.07 DISTURBED AREAS

A. All areas that are disturbed by the contractor are to be returned to their original condition or better. This includes, but is not limited to:
   1. Sidewalks
   2. Roadways
   3. Grass
   4. Vegetation

END OF SECTION

This Page Intentionally Left Blank

SECTION 01270
PRICE AND PAYMENT

PART 1 - GENERAL

1.01 SUMMARY

A. Work covered by this section includes method of measurement and basis of payment for all divisions included.

B. Payment for the various items of the Schedules, as further specified herein, shall include all compensation to be received by the contractor for furnishing all tools, equipment, materials, labor, supplies, manufactured articles, transportation, and temporary facilities required to complete the work in accordance with contract documents including incidentals.

C. Respective prices and payment shall constitute full compensation for all work completed including incidentals.

D. All items not expressly listed as being provided by others that are necessary for the completion of work shall be furnished and installed by the contractor.

1.02 ESTIMATED QUANTITIES

A. All quantities stipulated in the schedule or other contract documents are approximate and are to be used: (1) as a basis for estimating the probable cost of the work and (2) for the purpose of comparing the bids submitted.

B. The contractor shall be paid based upon a lump sum contract for this project. Partial payments will be based upon actual quantities installed during the time-period addressed by the invoice. Quantities included in the invoice will be measured in the field. The actual amounts of work completed and materials furnished may differ from estimated quantities. The contractor shall make no claim for damages, anticipated profits, or otherwise, on account of differences between the estimated amounts and the actual amount of work performed and materials furnished.

1.03 SURVEY AND MEASUREMENTS

A. All quantity measurements shall be the responsibility of the contractor and will be verified by the COTR.

B. All measurements and subsequent payments will be based on completed and accepted work performed in strict accordance with the drawings, specifications, and other contract documents.

PART 2 – SCHEDULE ITEMS

2.01 GENERAL

A. Payment shall be full compensation to complete the work items in good faith, including incidental work.

B. In addition to the those things listed under each item, the unit price shall be full compensation for all of the following:

1. General requirements in Division 01, but not limited to the following.

    a. Submittals
    b. Record drawings
    c. Schedules and Plans

2. Specific requirements in Division 02, including but not limited to the following (unless otherwise expressly defined as a line item in the bid schedule):

    a. Erosion control
    b. Clearing and grubbing
    c. Removal and replacement of obstructions
    d. Associated trenching, excavation and backfill including the removal of any nuisance water, bedding, haunching, and compaction.
    e. Disposal of any excess material
    f. Traffic control
    g. Rough grading
    h. Finish work, where called for, including finish grading, topsoiling, and landscaping

2.02 ITEMS

A. Sewer System Improvements Schedule

1. Mobilization

    a. Measurement: By the Lump Sum.

    b. Basis of Payment: Includes all labor, materials, equipment, tools and all other appurtenances required to transport equipment, materials, and/or staff to the job site.

2. 4” PVC, SDR 35 Pipe

    a. Measurement: By the linear foot as installed measured horizontally along the length of the line.

b. Basis of payment: Includes all labor, materials, equipment, tools and other appurtenances required to complete the installation and testing of the pipe.

3. 6” PVC, SDR 35 Pipe

c. Measurement: By the linear foot as installed measured horizontally along the length of the line.

d. Basis of payment: Includes all labor, materials, equipment, tools and other appurtenances required to complete the installation and testing of the pipe.

4. 6” HDPE, SDR 26 Pipe (Lining for Pipe-Bursted Lines)

e. Measurement: By the linear foot as installed measured horizontally along the length of the line.

f. Basis of payment: Includes all labor, materials, equipment, tools and other appurtenances required to complete the installation and testing of the pipe.

5. Sanitary Sewer Manholes – 4 Ft. Dia.

a. Measurement: Measured per manhole installed.

b. Basis of payment: Includes all labor, materials, equipment, tools and other appurtenances required to complete the installation of the manholes.

6. Flow Diversion Manhole

a. Measurement: Measured per Flow Diversion Manhole installed.

b. Basis of Payment: Includes all fittings, base and backfill stone, custom flow diversion assembly, access frame and grate and all other appurtenances required to complete the work as specified.

7. Precast Concrete Septic Tank

a. Measurement: Measured per each septic tank

b. Basis of payment: Includes all labor, materials, equipment, tools, base and backfill stone, and other appurtenances required to provide and install the installation of each septic tank.

8. Dosing Tank Aluminum Access Hatch

   a. Measurement: Measured per each access hatch installed.

   b. Basis of payment: Includes all labor, materials, equipment, tools and other appurtenances required to complete the installation of the hatch.

9. Dosing Tank Cast Iron Frame and Lid

   a. Measurement: By the Lump Sum for each lid provided and installed. .

   b. Basis of Payment: Includes all labor, materials, equipment, tools and all other appurtenances required to provide and install the frame and lid.

10. Dosing Tank Dosing Siphons

    a. Measurement: Measured per each dosing siphon provided and installed in the dosing tank.

    b. Basis of Payment: Includes all pipe, fittings, flushing, pressure testing, and all other appurtenances required to complete the installation of the dosing siphon in the dosing tank as specified.

11. 6’ x 4’ Precast Concrete Lid

    a. Measurement: Per each installed.

    b. Basis of Payment: Includes the precast (or poured in place) concrete lid provided and installed on the dosing tank per the construction plans. Price included removing and disposing of the existing lid off-site in an approved landfill. Contractor shall field verify all dimensions to insure a solid fit on the existing dosing tank.

12. 8’ x 4’ Precast Concrete Lid

    c. Measurement: Per each installed.

    c. Basis of Payment: Includes the precast (or poured in place) concrete lid provided and installed on the dosing tank per the construction plans. Price included removing and disposing of the existing lid off-site in an approved landfill. Contractor shall field verify all dimensions to insure a solid fit on the existing dosing tank.

13. Cast Iron Meter Box Lid

    d. Measurement: By each installed.

    e. Basis of Payment: Includes providing the appropriately sized cast iron lid and installing the lid on the existing HDPE valve box. The specified lids are designed specifically for HDPE valve boxes. Work also included removing and disposing of the existing HDPE lids in an approved landfill.

14. Chain Link Fence

    a. Measurement: Lump Sum payment for the fence to surround the subsurface drain field.

    b. Basis of Payment: Includes all posts, footings, supports, connections, and appurtenances required to complete the work as specified.

15. 12 Foot Double Swing Gate

    a. Measurement: By each installed.

    b. Basis of Payment: Includes all fence material, posts, concrete, supports and other appurtenances required to complete the work as specified.

16. 4 Foot Man-Gate

    a. Measurement: By each installed.

    b. Basis of Payment: Includes all fence material, posts, concrete, supports and other appurtenances required to complete the work as specified.

17. Restoration/Hydroseeding

    a. Measurement: Lump Sum.

    b. Basis of Payment: Includes fine-grading and hydroseeding all disturbed areas, removal of all erosion control materials and construction debri, and providing the asphalt surface course mix, and placement to repair all existing disturbed and/or damaged asphalt walkway areas. All asphalt work shall be done in accordance with the Tennessee Department of Transportation Standard Specifications.

END OF SECTION

This Page Intentionally Left Blank

SECTION 01310
PROJECT MANAGEMENT AND COORDINATION

PART 1 - GENERAL

1.01 SUMMARY

A. Section includes the preconstruction conference, construction scheduling and coordination requirements.

1.02 PRE-CONSTRUCTION CONFERENCE

A. Required after award of contract and prior to start of construction.

B. Representatives from the following shall attend.

1. Prime Contractor
2. Subcontractors
3. Owner

C. Contracting Officer/ COTR will arrange a date that is mutually acceptable to all parties planning to attend.

D. Contractor shall notify subcontractors of time and date of meeting.

1.03 CONSTRUCTION SCHEDULE

A. Present project engineer with a written preliminary construction schedule (Critical Path Method) containing start and completion dates of the major items at the preconstruction meeting.

B. Notify the COTR three full working days in advance of any construction.

C. Communicate major changes to the schedule to the COTR in writing.

1.04 COORDINATION WITH OTHER CONTRACTORS/UTILITIES

A. Coordinate work with other contractors (i.e. roads, building, etc) in the area as necessary to complete the work specified.

B. Coordinate work with local utilities (i.e. water and sewer, power, telephone). Note: all buried utilities may not be shown on the plans. Contractor's responsibility for having utilities marked prior to construction.

END OF SECTION

This Page Intentionally Left Blank

SECTION 01330
SUBMITTAL PROCEDURE

PART 1 - GENERAL

1.01 SUMMARY

A. This section includes information on submittal procedures. All items noted in Section 01270, Price and Payment require submittals.

1.02 SUBMITTAL PROCEDURES

A. Submit an electronic copy (Word or pdf file) to the COTR via email, unless requested otherwise.

B. Identify each cut sheet or shop drawing with the following information:

1. Contract number.
2. Supplier.
3. Specification section to which the submittal pertains.

C. Submit the following information, as applicable:

1. Manufacturer's cut sheets indicating compliance with references (e.g. applicable ASTM, AWWA standards).
2. Laboratory results, as applicable.
3. Dimensional drawings or shop drawings, as applicable.
4. Other information necessary for the Project Engineer to determine compliance with the specifications.

D. Variations from the contract documents or products specified:

1. Bring any and all submitted variations to the attention of the Contracting Officer.
2. Variations not brought to the Contracting Officer‘s attention, in writing, and that conflict with the Contract Documents, do not relieve the contractor from the requirements of the contract documents.

E. Revise and resubmit submittals as required and identify all changes made since previous submittal.

1. No additional contract time will be given for resubmittals required as a result of the contractor submitting incomplete or rejected submittals.

F. Distribute copies of reviewed submittals to concerned parties, (i.e. suppliers, sub-contractors).

G. Submit written communication of any inability to comply with the Project Engineer's comments.

H. Submit information to the Contracting Officer at least three weeks in advance of the work to be performed.

I. Approval of submittals must be provided by the Contracting Officer prior to installation of materials.

1.03 DEFINITIONS

A. Approved: Deemed to be acceptable for use in accomplishing the requirements of the plans and specifications, but does not extend to the means, methods, or procedures of construction (except where specific means, methods, or procedures are specifically required by the contract documents) and does not imply approval of the system or construction in which the submitted item is a part.

B. Conditionally Approved: Deemed to be acceptable for use in accomplishing the requirements of the plans and specifications, if the conditions noted in the submittal approval letter are met. The approval does not extend to the means, methods, or procedures of construction (except where specific means, methods, or procedures are specifically required by the contract documents) and does not imply approval of the system or construction in which the submitted item is a part.

C. Rejected: Deemed unacceptable for the use for which it was submitted.

D. Incomplete Submittal: Information is insufficient to ascertain acceptability. Neither approval nor rejection is implied.

END OF SECTION

SECTION 01430
QUALITY ASSURANCE

PART 1 - GENERAL

1.01 SUMMARY

A. This section includes prerequisites and procedures to assure the quality of construction.

1.02 CONTRACTORS QUALIFICATIONS

A. Work shall be performed by a registered contractor in the state where the project is proposed and for the type of construction and magnitude of construction being performed. The proposed project borders the Tennessee and North Carolina border; therefore, a contractor may be licensed in either state.

1.03 INSTALLER QUALIFICATIONS

A. Work shall be performed under the direction of personnel licensed in the state (Tennessee or North Carolina) where the project is proposed and where licensing of the trade is regulated by the state including, but not limited to, plumbing, well drilling, septic system installation, HVAC, and electrical work.

B. Where no license is required, work shall be performed under the direction of personnel certified by the manufacturer of the product where applicable.

1.04 CONTROL OF INSTALLATION

A. Review materials for acceptability when delivered to the site.

B. Store and handle materials to prevent damage.

C. Review materials, services, and workmanship to ensure that work is performed in accordance with the specifications.

D. Comply fully with manufacturers' instructions.

E. Should manufacturers' instructions conflict with contract documents, request clarification from Project Engineer before proceeding.

F. Correct defective work to the satisfaction of the Contracting Officer.

1.05 SAMPLES

A. When requested by the Contracting Officer, supply samples of materials proposed for use.

1.06 START-UP

A. Prior to start-up, ensure that all equipment is ready for its use, as designed.

B. Ensure that all power sources are balanced and ready for use.

C. Provide the services of manufacturers' field representative for start-up, testing, and adjustment of all major equipment items.

D. Provide reports from the manufacturer, including their observations and documentation of workmanship to the Contracting Officer within 30 days of manufacturer's visit, unless a sooner response is required by the applicable specification section.

E. Work will not be considered complete until all systems and subsystems have been tested for proper functionality and proper adjustment.

1.07 WARRANTY

A. Provide a minimum one (1) year warranty for all materials and labor, covering defects in the materials or deficiencies resulting from contractor installation.

B. Provide additional warranties as required by specific sections.

END OF SECTION

SECTION 01600
MATERIAL AND EQUIPMENT

PART 1 GENERAL

1.01 SUMMARY

A. The work of this section consists of the general procedures for handling, storing, and protecting material and equipment.

1.02 TRANSPORTATION AND HANDLING

A. Arrange deliveries of materials in accordance with construction schedules; coordinate to avoid conflict with work and conditions at the site. Deliver materials in undamaged condition, in manufacturer's original containers or packaging, with identifying labels intact and legible. Contractor is encouraged to obtain materials in biodegradable or recyclable/reusable packaging which uses the minimum amount of packaging possible.

B. Newfound Gap Road, Route 441, is closed to commercial truck traffic without prior approval. All commercial delivery drivers shall contact the Park Dispatch Office at 865-436-1294 to notify Park staff of the commercial delivery. Contractor shall also notify the COR of the pending commercial delivery. All deliveries in commercial vehicles shall take the shortest route through the Park to their destination. Contractor shall ensure that companies making deliveries are aware of the restrictions.

1.03 STORAGE AND PROTECTION

A. Store materials in accordance with manufacturer's instructions, with seals and labels accessible for inspection.

1. Materials stored on-site are the responsibility of the contractor. Items lost, stolen or damaged are the contractors responsibility until the items are installed AND accepted by the Contracting Officer. A material payment does not constitute acceptance of materials.

B. Exterior Storage:

1. Store products subject to damage by the elements in weather tight enclosures.
2. Store fabricated products above the ground, on blocking or skids; prevent soiling or staining. Cover products subject to damage or deterioration with impervious sheet coverings; provide adequate ventilation to avoid condensation.

C. Protection after Installation:

1. Provide adequate coverings as necessary to protect installed materials from damage resulting from natural elements, traffic, and subsequent construction.

END OF SECTION

This Page Intentionally Left Blank

SECTION 01770
PROJECT CLOSEOUT

PART 1 - GENERAL

1.01 SUMMARY

A. This section describes the requirements for final cleanup, closeout submittals and final inspection.

1.02 RELATED WORK

A. Section 01430 – Quality Assurance

1.03 DELIVERY

A. Provide all closeout submittals meeting these requirements and any specific requirements of each section.

B. All closeout submittals must be received in a correct and complete manner before final payment can be made.

1.04 DEFINITIONS

A. Record Drawing: A drawing showing the actual installation of facilities, showing changes from the plans; and showing detail enough that future persons can readily locate all objects.

B. Ties: Measurements from permanent easily located objects to an installed object.

PART 2 – PRODUCTS

2.01 CLEANING MATERIALS

A. As recommended by the manufacturer of surface to be cleaned.

PART 3 - EXECUTION

3.01 CLEANING

A. Before scheduling the final inspection, remove all tools, equipment, surplus materials, and rubbish. Restore or refinish surfaces that are damaged due to work of this contract to original condition. Remove grease, dirt, stains, foreign materials, and labels from finished surfaces. Thoroughly clean building interiors. Pick up all construction debris from

the site. At time of final inspection, project shall be thoroughly clean and ready for use.

3.02 WARRANTIES

A. Submit all warranty information regarding the materials installed.

B. Minimum warranty information is listed in Section 01430. Specific warranties may be required for each Section of specifications.

3.03 OPERATION AND MAINTENANCE INFORMATION

A. Submit all operation and maintenance information as included in the packaging from the manufacturer regarding the materials installed.

END OF SECTION

This Page Intentionally Left Blank

SECTION 02110

SITE CLEARING

PART 1 - GENERAL

1.1 SECTION INCLUDES

This specification shall govern all work necessary for clearing, grubbing, and stripping of objectionable matter as required to complete the project and shall include removing and disposing of trees, stumps, brush, roots, vegetation, rubbish and all other objectionable matter from the project site.

1.2 RELATED SECTIONS INCLUDE BUT ARE NOT NECESSARILY LIMITED TO:

A. Section 02200 – Topsoiling and Earthwork.

B. Section 02260 - Finished Grading.

C. Section 02270 - Soil Erosion and Sediment Control.

PART 2 - PRODUCTS - (NOT APPLICABLE TO THIS SECTION)

PART 3 - EXECUTION

3.1 PREPARATION

A. Protect existing trees and other vegetation to remain against damage.

1. Provide temporary tree protection barriers prior to construction activities as shown on drawings.

2. Do not smother trees by stockpiling construction materials or excavated materials within drip line.

3. Avoid foot or vehicular traffic or parking of vehicles within drip line.

B. Repair or replace trees and vegetation damaged by construction operations.

1. Repair to be performed by a qualified tree surgeon per ANSI A300 1995 or most recent edition.

2. Remove trees which cannot be repaired and restore to full-growth status.

3. Replace with new trees of minimum 4 IN caliper per ANSI Z60.1, Nursery Stock. Plant per Park standards.

4. Excess material shall be placed in stockpiles which shall be located at a location approved by the Contracting Officer.

C. Place temporary erosion control measures such as silt fence around all stockpiles.

3.2 SITE CLEARING

A. Clearing and Grubbing:

1. Trees may be cut between November 15 and March 31. Outside of these dates any tree cutting shall require a “bat survey” which shall be coordinated with the COR.

2. Clear from within limits of construction all trees identified for removal.

   a. Include shrubs, brush, downed timber, rotten wood, heavy growth of grass and weeds, vines, rubbish, structures and debris.

3. Grub (remove) from within limits of construction all stumps, roots, root mats, logs and debris encountered.

   a. Grub areas to be paved to a depth 2 feet below natural ground.

   b. Grubbing in non-paved areas:

      1) In cut areas, grub to a depth 2 feet below natural ground.

      2) In fill areas, where fill is less than 3 FT, grub ground to a depth 2 feet below natural ground.

      3) Where fill is 3 FT or more in depth, stumps may be left no higher than 6 IN above existing ground surface.

B. Disposal of Waste Materials:

1. Do not burn combustible materials on site.

2. Remove all waste materials from site and dispose of properly.

3. Do not bury organic matter on site.

3.3 ACCEPTANCE

Upon completion of the site clearing, obtain contracting officer's acceptance of the extent of clearing, depth of stripping, and rough grade.

END OF SECTION

SECTION 02315
EXCAVATION, TRENCHING AND BACKFILL

PART 1 - GENERAL

1.01 SUMMARY

A. This section includes excavation, trenching and backfill necessary for the construction of the facilities as indicated on the plans including, but not limited to: water mains and service lines, sewer mains and service lines, concrete manholes, septic tanks, and other structures.

1.02 RELATED WORK (as applicable)

A. Section 01119 – Revisions to Standard Specifications
B. Section 01720 – Staking and Construction Surveying
C. Section 01780 – Closeout Submittals
D. Section 02310 – Grading
E. Section 02316 – Rock Excavation
F. Section 02370 – Temporary Erosion And Sediment Control
G. Section 02510 – Water Distribution
H. Section 02511 – Water Service Lines
I. Section 02705 – Road Restoration
J. Section 02920 – Topsoiling, Seeding, Fertilization and Mulching

1.03 REFERENCES

A. Manual on Uniform Traffic Control Devices.

B. ASTM D698 – Test Methods for Moisture Density Relations of Soils and Soil-Aggregate Mixtures Using 5.5 lb. Rammer and 12-in. Drop [Standard Proctor Test].

C. ASTM D3035 – Underground installation of High-Density Polyethylene Pipe.

D. ASTM D2487 – Classification of Soils for Engineering Purposes [Unified Soil Classification System].

1.05 DEFINITIONS

A. Bedding, Haunching and Initial Backfill zones as defined herein and on the standard thermoplastic pipe trench detailed drawing below.

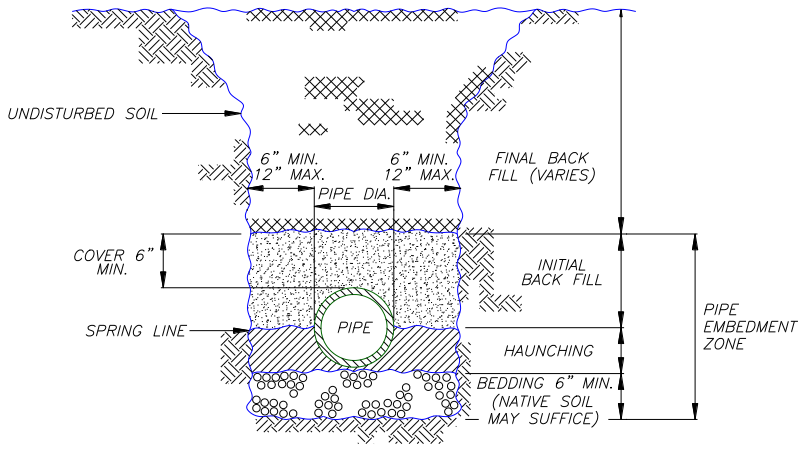

THERMOPLASTIC PIPE TRENCH DETAIL

B. Soil Materials as summarized in the table below and defined in ASTM D2321 and ASTM D2487

Description and Comparison of Soil Material Classifications

ASTM D2321		*ASTM D2487*	
Class	*Type*	*USCS Group Symbol*	*Description*
IA	Manufactured aggregates: ¼ to 1 ½ inch open graded, clean.	* *None*	Closest to "Poorly graded gravel (GP)"
IB	Manufactured aggregates: ¼ to 1 ½ inch dense graded, clean.	* *None*	Closest to "Poorly graded gravel with sand (GP)"
II	Coarse sands and gravels with maximum particle size of 1 ½ inch, clean.	GW	Well-graded gravels and gravel-sand mixtures; little or no fines.
		GP	Poorly graded gravels and gravel sand mixtures; little or no fines.
		SW	Well-graded sands and gravelly sands; little or no fines.
		SP	Poorly graded sands and gravelly sands; little or no fines
	Coarse sands and gravels with maximum particle size of 1 ½ inch, borderline clean.	GW-GC SP-SM Etc.	Sands and gravels which are borderline between clean and with fines
III	Fine sand and clayey gravels.	GM	Silty gravels, gravel-sand-silt mixtures.
		GC	Clayey gravels, gravel-sand-clay mixtures
		SM	Silty sands, sand-silt mixtures
		SC	Clayey sands, sand-clay mixtures
IV	Fine grained soils (inorganic)	ML	Inorganic silts and very fine sands, rock flour, silty or clayey fine sands, silts with slight plasticity.
		CL	Inorganic clays of low to medium plasticity, gravely clays, sandy clays, silty clays, lean clays.
		MH	Inorganic silts, micaceous or diatomaceous fine sandy or silty soils, elastic silts.
		CH	Inorganic clays of high plasticity, fat clays.

V	Organic soils	OL	Organic silts and organic silty clays of low plasticity.
		OH	Organic clays of medium to high plasticity, organic silts.
		PT	Peat and other high organic soils.

* USCS system is limited to naturally occurring soils. Manufactured aggregates not covered.

PART 2 – PRODUCTS

2.01 BEDDING, HAUNCHING AND INITIAL BACKFILL MATERIAL

A. Class I, Class II or Class III, utilized in accordance with restrictions described in Part 3 - Execution.

PART 3 - EXECUTION

3.01 GENERAL

A. Trenching and excavation work shall be done in accordance with proper emphasis on safety as determined by the contractor to conform to recommended safety standards such as OSHA 1910 and 1926.

B. Obtain all permits from appropriate road agency for construction within road right of way.

C. Repair damage resulting from settlement, slides, cave-ins, water pressure, and other causes.

D. Provide adequate signs, barricades, fences and amber lights and take all necessary precautions to protect the work and the safety of the public in all construction areas.

1. Placement of construction signs and barricades shall conform to the “Manual on Uniform Traffic Control Devices.”

2. Protect barricades and obstructions at night by amber signal lights that burn from sunset to sunrise. Barricades shall also be of substantial construction, painted white or with reflective paint to increase their visibility at night.

3. Perform work without obstruction to traffic or inconvenience to the general public and the residents in the vicinity of the work.

E. Road Crossing

1. Comply with all construction and material requirements of roadway authorities having jurisdiction.

2. Maintain one lane of traffic open at all times.

3. Refer to Section 02705 – Road Restoration for backfill and restoration requirements (where applicable).

3.03 EXCAVATION

A. All excavation shall be considered as "unclassified excavation". No additional payment shall be made for rock excavation.

B. Remove stumps from excavation and site. Tree tops shall be ground or mulched up and may be spread in the woods to a depth of no more than 4". Tree trunks shall be cut into sections no longer than 10' and laid flat in the woods.

C. Remove and stockpile existing topsoil.

D. Install facilities as staked unless otherwise approved by Project Engineer.

E. Maintain surface drainage away from trenching or excavation.

E. Remove unsuitable foundation materials from excavation as shown on the plans or as authorized by the Project Engineer.

F. Maintain a minimum 1-foot clearance between outer surface of structure being installed and wall of excavation.

G. **Rock encountered shall be excavated and removed as necessary with no additional payment.**

3.04 TRENCHING

A. All trench excavation shall be considered as "unclassified excavation". No additional payment shall be made for rock removal from trenches.

B. Bottom width: No less than 12 inches or more than 24 inches wider than the outside diameter of the pipe.

C. Depth: Provide minimum cover as specified, or depths shown on plans.

3.05 BEDDING

A. If existing soil cannot provide uniform, stable bearing support, over-excavate 6 inches below bottom of pipe or structure and provide bedding material.

B. Utilize Class I, II or III materials as appropriate for bedding as listed in Table below.

Use of Soils and Aggregate for Bedding

	Class IA	*Class IB*	*Class II*	*Class III*
General	Excellent pipe support. Excellent drainage.	Excellent pipe support. Good drainage. Minimizes migration of adjacent material.	Good pipe support. Fair drainage.	Reasonable pipe support. Poor drainage
Compaction	Not required	Not required	Required 90% of Standard Proctor.	Required 90% of Standard Proctor.
Wet Conditions (below current or future water table). Rock Cuts	Acceptable. Must use same material for Haunching.	Acceptable. Must use same material for Haunching.	Acceptable. Clean groups only suitable for drainage blanket.	Not- Acceptable
Dry Conditions	Acceptable	Acceptable	Acceptable	Acceptable

3.06 HAUNCHING AND INITIAL BACKFILL

A. General

1. Provide complete and uniform bearing and support for the pipe, including allowance for bell holes, or structure.

2. Work material under and around the pipe to ensure full pipe support.

3. Prevent movement of the pipe during placement of material.

4. Avoid contact between the pipe and mechanical compaction equipment.

B. Utilize Class I, II or III materials as appropriate for haunching and initial backfill as listed in Table below. No frozen materials or frozen clods.

Use of Soils and Aggregate for Haunching and Initial Backfill

	Class IA	*Class IB*	*Class II*	*Class III*
General	Excellent pipe support. Excellent drainage. Install to a minimum of 6” above the pipe crown.	Excellent pipe support. Good drainage. Minimizes migration of adjacent material. Install to a minimum of 6” above the pipe crown.	Good pipe support. Fair drainage. Install and compact to a minimum of 6” above the pipe crown.	Reasonable pipe support. Poor drainage. Install and compact to a minimum of 6” above the pipe crown.

Compaction	Not required	Not required	Required 85% of Standard Proctor. 6 inch maximum lifts.	Required 90% of Standard Proctor. 6 inch maximum lifts.
Wet Conditions (below current or future water table). Rock Cuts	Acceptable. Must use same material for Bedding. Extend Haunching to the top crown of the pipe.	Acceptable. Must use same material for Bedding. Extend Haunching to the top crown of the pipe.	Acceptable. Clean groups only suitable for drainage.	Not- Acceptable
Dry Conditions	Acceptable	Acceptable	Acceptable	Acceptable

3.07 FINAL BACKFILL

A. Backfill remainder of excavation with native material, free from large clods, large stones, organic material or frost chunks.

B. Compact in 12-inch lifts to a density not less than the density of the surrounding undisturbed soil.

   1. Compact with a mechanical tamper to a density not less than 90% of the maximum dry density, determined by ASTM D 698.

   2. Provide 4 feet minimum cover over the top of the pipe before utilization of hydro-hammer compaction equipment.

   3. Provide 3 feet minimum of backfill over the pipe before wheel loading the trench.

C. Conform to Section 02705 – Road Restoration for backfill requirements under roadways.

D. Backfill and compact around manholes, valve boxes, and other appurtenances in 12-inch lifts.

   1. Compact with a mechanical tamper to a density not less than 90% of the maximum dry density, determined by ASTM D 698.

E. Backfill around septic tanks in 18-inch lifts.

   1. Compact in a manner that will not produce undue strain on the tank.

   2. Compaction may be accomplished with the use of water, provided the material is thoroughly wetted from the bottom up, and the tank is filled with water to prevent floating.

F. Repair any trenches improperly backfilled or where settlement occurs, then refill and compact.

G. Restore surface to the required grade and compaction. Conform to Section 02310 – Grading for rough grading, finish grading and site surface drainage.

H. Remove all surplus backfill materials to a location approved by the Engineer.

3.08 REMOVAL OF NUISANCE WATER

A. Remove nuisance water entering the trenches. Nuisance water that can be removed through the use of sump or trash pumps is not considered dewatering.

B. Keep trenches free from water until the facilities are in place, sealed against the entrance of water, and backfill has been placed and compacted above the water level.

3.09 LOCATE EXISTING UTILITIES

A. Field locate all existing underground utilities.

1. Utilize state “dig-safe” or “one-call” hotlines.

2. Contact all other utility owners not covered by the state “dig safe” hotlines.

3.10 UTILITY CONFLICTS

A. Protect existing utilities from damage during excavation and backfilling operations.

B. Provide temporary support for existing water, gas, telephone, power, or other utility services that cross the trench until backfilling of trench is complete

1. Compact backfill to 95% of Standard Proctor Density under disturbed utilities.

2. Repair or replace any damaged existing utilities, at no additional cost to the project.

C. Water and sewer <u>main</u> crossing and parallel installation

1. Maintain a 10-foot horizontal separation (O.D. to O.D.) for parallel mains.

2. Upon approval by the Engineer, water and sewer mains may be installed closer than 10-feet, provided all of the following conditions;

a. Vertical separation is 18 inches (O.D. to O.D.)
b. Water main is above the sewer main.
c. Separate trenches are maintained.

3. Maintain a minimum 18-inch vertical separation (O.D. to O.D.) for crossing mains.

   a. Lay pipe with joints equidistant from the point of crossing.

4. If it is impossible to meet any of the above separation distances and deviations, one of the following methods shall be adhered to.

   a. Sewer main shall be constructed to water main pressure pipe standards, and successfully pass a 150-psi pressure test prior to backfilling.

   b. Either the water main or the sewer main may be encased in a watertight carrier pipe that extends 10 feet on both sides of the crossing. The carrier pipe shall be of materials approved by the regulatory agency for use in water main construction.

D. Water and sewer <u>service</u> crossing and parallel installation.

1. Maintain a 10-foot horizontal separation from water and sewer services.

2. Maintain an 18-inch vertical separation for crossing water and sewer services, with the sewer service below the water service

3. Water service line splices or joints will not be permitted within 10 feet of a sewer line crossing.

3.12 MOVING FENCES AND MINOR STRUCTURES

A. Remove and reset culverts, drainage pipes, gates or other minor structures that fall within the alignment of the new construction, to their original location and grade.

B. Visit the project site and determine actual conditions with regard to the existence of old car bodies, abandoned houses, fences, driveways, trees, stumps, brush, sidewalks, approaches, and other miscellaneous obstacles to construction.

1. Unless specifically referenced in a bid item, no separate payment will be made for the removal or replacement of these items.

3.14 RECORDS

A. Conform to as-built requirements in Section 01780 – Closeout Submittals.

END OF SECTION

This Page Intentionally Left Blank

SECTION 02370
TEMPORARY EROSION AND SEDIMENT CONTROL

PART 1 - GENERAL

1.01 SUMMARY

A. This section includes erosion and siltation control measures accomplished through the use of interception embankments, berms, dikes, dams, silt fences, settling basins, slope paving, ditch checks, rip-rap, mulches, erosion mats, and other erosion control devices or methods.

1.02 RELATED WORK

A. Section 02310 – Grading

B. Section 02315 – Excavation, Trenching and Backfill

C. Section 02920 – Topsoiling, Seeding, Fertilizing and Mulching

1.03 REFERENCES

A. North Carolina Division of Water Quality – Stormwater Best Management Practices Manual

B. Tennessee Department of Environment and Conservation – Erosion and Sediment Control Handbook

C. Environmental Protection Agency - 1987 Congressional Amendments, Clean Water Act, Section 402.

1.04 SUBMITTALS

A. Biodegradable Logs

B. Silt fence material, (or alternate erosion control material proposed).

C. Erosion Control Plan (If requested by the Project Engineer)

1.05 QUALITY ASSURANCE

A. Erosion control materials, methods and practices shall conform to the applicable state agency handbooks of Best Management Practices.

B. Obtain and pay for permits and inspections in accordance with the provisions of all local government agencies having jurisdiction. No additional claim for

compensation will be allowed because of the contractor's failure to obtain or pay for such permits and inspections.

PART 2 - PRODUCTS

2.01 POSTS

A. Wood or steel, 2" x 2" x 54" minimum.

2.02 EROSION BALES

A. Will only be allowed if made of non-grass material (no straw or hay)

2.03 SILT FENCING

A. 15 mil thick screen fabric with a minimum of 120 pounds of grab tensile strength and an equivalent minimum opening size of 170.

B. All seams shall be heat sealed or sewn.

2.04 BIODEGRADABLE LOG

A. Sized to accommodate drainage area.

B. Made of non-grass material (no straw or hay).

C. America Excelsior Company Curlex logs or equal.

2.05 OTHER

A. Other materials proposed by the contractor shall conform to standards published by the applicable state agency handbooks of Best Management Practices (BMP's).

PART 3 – EXECUTION

3.01 GENERAL

A. Coordinate temporary and permanent erosion control measures to assure economical, effective and continuous erosion control.

B. Keep construction areas small.

C. Divert drainage away from construction areas.

D. Perform construction in and adjacent to rivers, streams, lakes or other waterways in such a manner as to avoid washing, sloughing or deposition of material into waterways which will result in undue or avoidable contamination, pollution or siltation of such waterways.

E. Inspect and maintain erosion control materials to ensure its continued effectiveness.

1. Remove sediment material captured by erosion control systems when the silt reduces the remaining system capacity to 50% of the total system.

2. Inspect and repair erosion control systems within 48 hours of rain event.

F. Remove erosion control only after the area has stabilized and vegetation has developed to the extent that further erosion is unlikely.

G. Submit an erosion control plan in accordance with State BMP's and Federal EPA requirements, if the area to be disturbed is greater than 1 acre total.

3.02 TEMPORARY EROSION CONTROL

A. Use temporary erosion control measures to protect ditches and drainage ways as shown on the detailed drawings and as directed by the project engineer.

B. Biodegradable Logs

1. Place logs at right angles to the direction of flow.

2. Securely anchor each log with stakes as shown on the plans.

C. Silt Fencing

1. Place silt fences in an arc or horseshoe shape with the ends pointing up towards the slope.

D. Spoil and Material piles

1. Cover all soil/gravel piles with a tarp(s) at the end of each day.

END OF SECTION

This Page Intentionally Left Blank

SECTION 02372
ENVIRONMENTAL PROTECTION

PART 1 – GENERAL

1.01 SECTION INCLUDES

A. Requirements for prevention of environmental pollution and damage as the result of construction operations under this Contract.

1.02 RELATED WORK

A. Section 02310 – Grading

B. Section 02315 – Excavation, Trenching, and Backfilling

1.03 SYSTEM DESCRIPTION

A. Environmental pollution and damage are defined as the presence of chemical, physical, or biological elements or agents which adversely affect human health or welfare; unfavorably alter ecological balances of importance to human life; affect other species of importance to man; or degrade the utility of the environment for aesthetic, cultural, and/or historical purposes.

B. The control of environmental pollution and damage requires consideration of air, water, and land, and includes management of visual esthetics, noise, solid waste, radiant energy and radioactive materials, as well as other pollutants.

1.04 QUALITY ASSURANCE

A. Comply with this specification and the projects Storm Water Pollution Prevention Plan.

B. Inspection Logs will need to be submitted with Applications for Payment.

1.05 SUBMITTALS

A. Qualifications of Inspector (if SWPPP is issued)

PART 2 – PRODUCTS

2.01 STORM WATER POLLUTION INSPECTOR

A. Contractor is to provide a state qualified and licensed (if applicable) inspector to maintain and update the Storm Water Pollution Prevention Plan.

PART 3 – EXECUTION

3.01 PROTECTION OF ENVIRONMENTAL RESOURCES

A. Protect the environmental resources within the project boundaries and those affected outside the limits of permanent Work during the entire period of this Contract. Confine activities to areas defined by the Drawings and Specifications.

B. Protection of Land Resources:

1. Prior to the beginning of any construction, identify all land resources to be preserved within the Work area.
2. Do not remove, cut, deface, injure, or destroy land resources including trees, shrubs, vines, grasses, topsoil, and landforms without special permission from the OWNER.
3. Do not fasten ropes, cables, or guy wires to any trees for anchorage unless specifically authorized. Where such special emergency use is permitted, provide effective protection for land and vegetation resources at all times.

C. Location of Field Offices, Storage, and Other Contractor Facilities:

1. Place field offices, staging areas, stockpile storage, and temporary buildings in areas designated by the OWNER.
2. Temporary movement or relocation of facilities shall be made only on approval by the OWNER.

D. Disposal of Waste:

1. Dispose of solid wastes (excluding clearing debris) in containers which are emptied on a regular schedule. All handling and disposal shall be conducted to prevent contamination.
2. Transport all solid waste off property and dispose of it in compliance with applicable Federal, State, and local requirements for solid waste disposal.
3. Store chemical waste in corrosion resistant containers, removed from the Work area and disposed of in accordance with applicable Federal, State, and local regulations.
4. Discarded materials other than those which can be included in the solid waste category shall be handled as directed by the OWNER.

3.02 PROTECTION OF WATER RESOURCES

A. Keep construction activities under surveillance, management, and control to avoid pollution of surface and ground waters. Special management techniques as set out herein shall be implemented to control water pollution.

B. Washing and Curing Water:

1. Wastewaters directly derived from construction activities shall not be allowed to enter water areas.
2. These wastewaters shall be collected and placed in retention ponds where suspended materials can be settled out or the water evaporates so that pollutants are separated from the water.

C. Monitor all water areas affected by construction activities.

3.03 PROTECTION OF FISH AND WILDLIFE RESOURCES

A. Keep construction activities under surveillance, management, and control to minimize interference with, disturbance to, and damage of fish and wildlife.

B. Clean all equipment before entering the Park to limit invasive species

3.04 PROTECTION OF AIR RESOURCES

A. Keep construction activities under surveillance, management, and control to minimize pollution of air resources.

B. All activities, equipment, processes and Work operated or performed in accomplishing the specified construction shall be in strict accordance with the applicable air pollution standards of the State and all Federal emission and performance laws and standards.

3.05 PROTECTION OF SOUND INTRUSIONS

A. Keep construction activities under surveillance, and control to minimize damage to the environment by noise.

3.06 ADJUSTING AND CLEANING

A. Clean up any area(s) used for construction.

B. Restore all landscape features damaged or destroyed during construction operations outside the limits of the approved work areas. Such restoration shall be in accordance with the plan submitted to the OWNER for approval.

3.07 TRAINING OF CONTRACTOR PERSONNEL IN POLLUTION CONTROL

A. Train personnel in all phases of environmental protection.

B. Include methods of detecting and avoiding pollution, familiarization with pollution standards, both statutory and contractual, and installation and care of facilities to ensure adequate and continuous environmental pollution control.

C. Train and inform quality control and supervisory personnel in the proper use of monitoring devices and abatement equipment, and Federal, State, and local laws, regulations, and permits, as listed in the Environmental Protection Plan submitted by the CONTRACTOR.

3.08 MAINTAINING STORM WATER POLLUTION PREVENTION PLAN

A. The Storm Water Pollution Prevention Plan is considered a “living document” and as such, will not show all the erosion control measures that will likely be needed at the time of bidding.

B. Obtain any permits required to cover the contractor for work being perform, including (as applicable) but not limited to NOI and NOT.

C. Maintain and update the Storm Water Pollution Prevention Plan as needed.

D. Inspect pollution prevention measures at the frequency outlined in the Storm Water Pollution Prevention Plan using a trained and qualified inspector.

E. If a BMP is required that is not covered by the Storm Water Pollution Prevention Plan, follow the Tribal, State, or local authority’s recommendations for the BMP.

END OF SECTION

This Page Intentionally Left Blank

SECTION 02530
SANITARY SEWER

PART 1 - GENERAL

1.01 SUMMARY

A. This section includes the construction of sanitary sewer mains, sewer main cleanouts, sewer line testing, and connection to existing sewage collection systems.

1.02 RELATED WORK (as applicable)

A. Section 01119 – Revisions to Standard Specifications
B. Section 02315 – Excavation, Trenching and Backfill
C. Section 02531 – Sewer Service Lines
D. Section 02532 – Sanitary Sewer Manholes
E. Section 03300 – Cast-in-Place Concrete (Non-Structural)

1.03 REFERENCES

A. ANSI/AWWA C110 / A21.10 – Ductile-Iron and Gray-Iron Fittings, 3 Inch Through 48 Inch, for Water and Other Liquids

B. ANSI / AWWA C111 / A21.11 – Rubber Gasket Joints for Ductile Iron and Gray-Iron Pressure Pipe and Fittings

C. ANSI / AWWA C151 / A21.51 – Ductile Iron Pipe, Centrifugally Cast, for Water or Other Liquids

D. ASTM D 1248 – Polyethylene Plastics Molding and Extrusion Materials

E. ASTM D 2122 – Determining Dimensions of Thermoplastic Pipe and Fittings

F. ASTM D 3034 – Type PSM Polyvinyl Chloride (PVC) Sewer Pipe and Fittings

G. ASTM D 3212 – Joints for Drain and Sewer Plastic Pipes Using Flexible Elastomeric Seals

H. ASTM F 477 – Elastomeric Seals (Gaskets) for Joining Plastic Pipe

I. ASTM F 1417 – Installation Acceptance of Plastic Gravity Sewer Lines Using Low-Pressure Air

1.04 SUBMITTALS

A. Sewer Main Pipe

B. Frame and Cover for Sewer Main Cleanouts

1.05 ACCEPTANCE

A. The Work will not be accepted until satisfactory pipe backfilling, testing, and clean up is complete.

B. If the Work does not meet the specified requirements of this section and related sections, remove, replace, and retest at no additional cost.

PART 2 - PRODUCTS

2.01 SEWER PIPE MATERIALS

A. Polyvinyl Chloride (PVC) Sewer Pipe

1. Conform to ASTM D 3034.

2. Pipe Class: SDR-35

3. Bell ended joints conforming to ASTM D 3212

4. Elastomeric gaskets conforming to ASTM F 477

5. Each length of pipe shall be clearly marked with the following:

a. Manufacturer
b. Nominal Pipe Size
c. The PVC Cell Classification
d. Type PSM PVC Sewer Pipe
e. ASTM Designation
f. Pipe Class

B. Ductile Iron Sewer Pipe

1. Conform to AWWA C151.

2. Pipe Thickness Class: 50

3. Exterior Coating: asphaltic coating, 1 mil thick, minimum

4. Rubber gasket, push on joints conforming to ASTM C111

5. Interior Lining: Polyethylene meeting ASTM D 1248, fusion bonded

6. Each length of pipe shall be clearly marked with the following:

    a. Manufacturer
    b. Nominal Pipe Size
    c. ASTM Designation
    d. Pipe Class

2.03 SEWER APPURTENANCES

A. Manholes: Refer to Section 02532.

B. Sewer Main Cleanouts

1. Riser Pipe:

    a. Conform to ASTM D 3034.
    b. Pipe Class: SDR-35
    c. Elastomeric gasket joints conforming to ASTM D 3212
    d. 6-Inch diameter unless otherwise specified.
    e. 6-Inch gasketed air-tight plug

2. Concrete Collar: Cast-In-Place - Refer to Section 03300 for concrete requirements.

3. Frame and Cover:

    a. Heavy duty slab type
    b. Machined bearing surfaces
    c. Neoprene gasket seal
    d. Lockable with stainless steel cap screws
    e. Neenah R-6461-CH or approved equal.

PART 3 - EXECUTION

3.01 EXAMINATION

A. Verify that dimensions and elevations are as indicated on the Drawings.

B. Verify that all products are in new condition.

C. Inspect pipe and fittings for defects.

D. Remove materials from the site that are defective, damaged, used, unsound, or that otherwise do not meet the specifications.

3.02 UTILITY CONFLICTS

A. Refer to Section 02315.

3.03 SEWER MAIN INSTALLATION

A. Staking: Provided by the Contractor.

B. Pipe Installation:

1. Adhere to the excavation, trenching and backfill requirements of Section 02315.

2. Install pipe and fittings in accordance with these specifications and the manufacturer's recommendations.

3. Lay pipe of the size, and to the line and grade indicated on the drawings.

   a. Ensure that the vertical alignment does not deviate from 0.05% or 0.1 feet (whichever is less) from the design grade as shown on the plans.

4. Install pipe beginning at the lowest elevation and proceeding to the highest elevation unless otherwise directed by the Project Engineer.

5. Point the spigot end in the direction of flow.

6. Protect pipe interior from soil, trench water and foreign objects.

7. Temporarily plug the exposed end of pipes whenever the trench is left unattended or when trench conditions necessitate.

C. Connection to Existing Manholes: Make connection as directed by the Project Engineer with the manhole floor reshaped to provide a channel in conformance with Section 02531 – Sanitary Sewer Manholes.

3.04 SEWER MAIN CLEANOUTS

A. Furnish and install at the locations indicated on the Drawings.

B. Construct as shown on the standard detail drawing.

3.05 SEWER MAIN TESTING

A. General:

1. Furnish all materials, labor and equipment to perform the required tests.

2. Perform all tests in the presence of the Project Engineer or his/her representative.

3. Repair all sections of sewer not passing the tests, in accordance with Project Engineer approved methods, at no cost to the Project.

4. Retest sewer until tests pass the requirements, at no cost to the Project.

B. Alignment

1. Alignment will be checked by the Project Engineer and at the discretion of the Project Engineer.

2. Lamping shall be performed, at the discretion of the Project Engineer, after the sewer line has been completely backfilled.

3. Sewer main out of alignment with respect to line or grade, by more than 0.10 feet, shall be reinstalled at the contractor's expense.

C. Deflection Test

1. Perform the deflection test on all sewer main.

2. Testing Device:

a. Use a mandrel, or some other Project Engineer approved rigid, cylindrical object of proper dimensions.

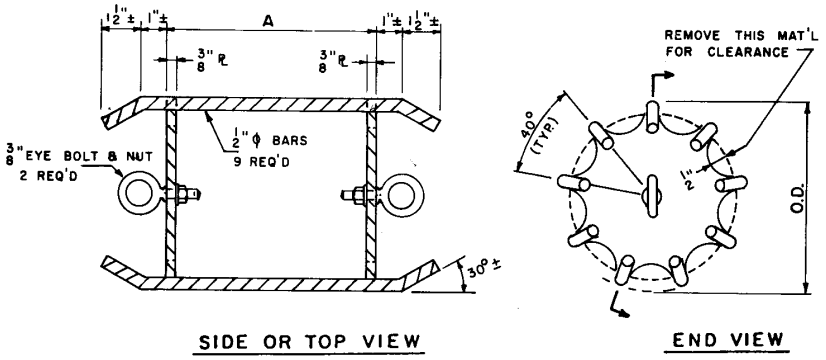

Nominal Pipe Size I.D. (inches)	Length (A) (inches)
8	8
10	10
12	10
15	12

b. Tests Within 30 Days of Installation: Mandrel outside diameter shall be equal to 95% of the sewer main inside diameter

c. Tests Beyond 30 Days of Installation: Mandrel outside diameter shall be equal to 92.5% of the sewer main inside diameter.

3. To be considered a successful test, the mandrel shall pass through the entire length of sewer main in one pass without mechanical force.

D. Infiltration Test

1. Infiltration tests shall be made in a manner approved by and in the presence of the Project Engineer.

2. Minimum level of ground water above pipe during test: 2 feet.

3. Maximum allowable infiltration is 50 gallons per day per inch diameter per mile of sewer line ***and*** the infiltration between any two adjacent manholes shall not be greater than 250% of the allowable infiltration rate.

Diameter of Sewer (inches)	Infiltration per foot per hour (gallons)
4	0.0063
6	0.0095
8	0.0126
10	0.0158
12	0.0190

4. Infiltration allowance for manholes is computed using the total number of vertical feet of manhole expressed as the equivalent diameter sewer.

Diameter of Manhole (inches)	Infiltration per vertical foot per hour (gallons)
42	0.0663
48	0.0758

5. All gravity sewers and appurtenances shall be free of visible leakage and all such leaks shall be corrected.

6. Infiltration of groundwater in an amount greater than specified, following a successful air test shall be considered as evidence that the air test was in error or that subsequent failure of the pipelines has occurred.

7. Failures, which occur within the warranty period, shall be corrected at no additional expense to the project.

E. Air Test

1. All gravity sewers and appurtenances shall successfully pass a low-pressure air test prior to acceptance.

2. Preparation: Clean all sewer pipe before the test.

3. Testing Equipment:

   a. Plugs: mechanical or pneumatic type. One shall have a inlet tap for adding air to the sewer line.
   b. Air Compressor
   c. Main Shutoff Valve
   d. Pressure Relief Valve: 9 psig relief
   e. Input Pressure Gauge
   f. Continuous Monitoring Pressure Gauge: Minimum divisions of 0.10 psi with an accuracy of +/- 0.04 psi.

4. Testing Procedure: Test according to the Time-Pressure Drop Method outlined in ASTM F 1417.

   a. Plug all pipe outlets with test plugs capable of holding under the test pressures.

   b. Install plugs and brace as necessary to ensure that the plugs will not blow out when the main is under pressure.

   c. Inspect sewer main pipe integrity in the area that will not be tested due to the plug, and report any possible defects to the Project Engineer.

   d. Pressurize Pipe:

      (1) Introduce air slowly until air pressure reaches 4.0 psig greater than any backpressure resulting from groundwater over the pipe, where the pressure equals:

4.0 psi + (0.43 psi X Depth of Groundwater over Pipe Invert in Feet)

(2) Never exceed a pressure of 9.0 psig.

e. Do not enter manhole once pipe is pressurized.

f. Maintain pressure for at least two (2) minutes.

g. Disconnect air supply after the initial two (2) minutes have passed.

h. Adjust pressure to test pressure.

(1) Decrease air pressure to 3.5 psig greater than any pressure resulting from groundwater over the pipe, where the test pressure equals:

3.5 psi + (0.43 psi X Depth of Groundwater over Pipe Invert in Feet)

i. Determine elapsed time for the pressure to drop 1.0 psig and use Table 1; or determine the elapsed time for the pressure to drop 0.5 psig from the test pressure and use Table 2.

TABLE 1: Minimum Specified Time Required for a 1.0 psig Pressure Drop

Pipe Dia. (in.)	Min. Time (min:sec)	100 Feet	150 Feet	200 Feet	250 Feet	300 Feet	350 Feet	400 Feet	Time for Longer Pipe Lengths (Seconds)
4	3:46	3:46	3:46	3:46	3:46	3:46	3:46	3:46	.380*L
6	5:40	5:40	5:40	5:40	5:40	5:40	5:40	5:42	.854*L
8	7:34	7:34	7:34	7:34	7:34	7:36	8:52	10:08	1.520*L
10	9:26	9:26	9:26	9:26	9:53	11:52	13:51	15:49	2.374*L
12	11:20	11:20	11:20	11:24	14:15	17:05	19:56	22:47	3.418*L
15	14:10	14:10	14:10	17:48	22:15	26:42	31:09	35:36	5.342*L
18	17:00	17:00	19:13	25:38	32:03	38:27	44:52	51:16	7.692*L

TABLE 2: Minimum Specified Time Required for a 0.5 psig Pressure Drop

Pipe Dia. (in.)	Min. Time (min:sec)	100 Feet	150 Feet	200 Feet	250 Feet	300 Feet	350 Feet	400 Feet	Time for Longer Pipe Lengths (Seconds)
4	1:53	1:53	1:53	1:53	1:53	1:53	1:53	1:53	.190*L
6	2:50	2:50	2:50	2:50	2:50	2:50	2:50	2:51	.427*L
8	3:47	3:47	3:47	3:47	3:47	3:48	4:26	5:04	.760*L
10	4:43	4:43	4:43	4:43	4:57	5:56	6:55	7:54	1.187*L
12	5:40	5:40	5:40	5:42	7:08	8:33	9:58	11:24	1.709*L
15	7:05	7:05	7:05	8:54	11:08	13:21	15:35	17:48	2.671*L
18	8:30	8:30	9:37	12:49	16:01	19:14	22:26	25:38	3.846*L

j. Ensure test apparatus and gauges are accessible to owner's representative without entry into the manhole.

k. The time interval recorded in the field must be greater than the time listed for the length and pipe diameter being tested and for the pressure drop recorded.

l. If the pressure drop time is less than that in the appropriate table, for the pipe diameter and the length being tested, the test shall be considered failed.

m. No variance in the time allowances shall be granted for the fact that sewer service lines have been installed.

5. Individual service lines need not be tested unless otherwise specified in Section 01119 – Revisions to Standard Specifications

6. In lieu of low-pressure air testing of the sewer system, the Project Engineer may approve a hydrostatic exfiltration testing procedure to test the lines.

   a. Approval of the procedure, equipment and basis of acceptance for this testing method will be sent in writing by the Project Engineer prior to the initiation of testing.

END OF SECTION

This Page Intentionally Left Blank

SECTION 02532
SANITARY SEWER MANHOLES

PART 1 - GENERAL

1.01 SUMMARY

A. Work covered by this section includes standard and shallow concrete manholes, temporary covers, adjustment rings, chimney seals, frames, and covers for community wastewater collection systems.

1.02 RELATED WORK (as applicable)

A. Section 02315 – Excavation, Trenching and Backfill for Sanitation Facilities
B. Section 02530 – Sanitary Sewers

1.03 REFERENCES

A. ASTM C 39-86 – Compressive Strength of Cylindrical Concrete Specimens

B. ASTM C 267-77 – Chemical Resistance of Mortars

C. ASTM C 443 – Joints for Circular Concrete Sewer and Culvert Pipe, Using Rubber Gaskets

D. ASTM C 478 – Precast Reinforced Concrete Manhole Sections

E. ASTM C 923 – Resilient Connectors Between Reinforced Concrete Manhole Structures and Pipes

F. ASTM C 990 – Joints for Concrete Pipe, Manholes, and Precast Box Sections Using Preformed Flexible Joint Sealants

G. ASTM C 1244 – Standard Test Method for Concrete Sewer Manholes by the Negative Air Pressure (Vacuum) Test

H. CRD C48-73 – Permeability of Concrete

1.04 SUBMITTALS

A. Manhole frame and cover

B. Manhole steps

C. Precast manhole sections

D. Precast manhole base section

E. Joint sealing material

F. Pipe to manhole connections

G. Chimney seals w/manufacturer's instructions

H. Product data for coating with installation instructions

I. Product data for Internal Drop Manholes

1.05 DEFINITIONS

A. Shallow Manhole: Manholes with a depth from rim to outlet pipe invert equal to 5-feet or less, with a flat top or conical top section as required.

B. Standard Manhole: Manholes with a depth from rim to outlet pipe invert greater than 5-feet, and with a conical top section.

PART 2 - PRODUCTS

2.01 MANHOLES

A. Design and fabricate reinforced concrete manholes to conform to ASTM C 478.

B. Base Section:

1. Precast integral concrete bottom section and base (monolithic).

2. Precast bases with channels.

3. Channel (or invert) shape:

a. Smooth
b. Semicircular
c. Same diameter as adjoining sewer pipe
d. Ogee shaped, so there is no free drop.

4. Drop:

a. Minimum: 0.10 feet on through manholes measured from any invert in the structure to the invert out of the structure. 0.20 feet when there are bends between in and out of the structure.

b. Maximum: 2 feet through manholes measured from any invert into the structure to the invert out without a drop manhole.

5. Changes in Pipe Size or Grade: Make changes in size and grade of channels gradually and evenly.

6. Changes in Direction: Smooth curve of as large a radius as the size of the manhole will permit with the intersection of the lines occurring at the center of the manhole.

7. Benches: Construct the manhole floor, outside of the channel, smooth and slope toward the channel not less than ½-inch per foot.

C. Barrel Sections:

1. 48-Inch inside diameter unless modified by Section 01119.

D. Cone Sections:

1. Eccentric Cone Sections.

E. Top Slab Sections:

1. Provide manhole opening eccentrically located to allow positioning over the outlet.

F. Manhole Steps:

1. Cast and anchor steps in concrete sections, aligned to form a continuous ladder.

2. Install steps so they are horizontal, protruding 5-inches, minimum.

3. Material: 1/2-inch steel steps encased in neoprene or polypropylene.

4. Width: 12-inches, minimum.

5. Space rungs 16-inches apart.

6. Maximum spacing from the top of the cone to the first rung shall be 6-inches.

7. Center steps over the manhole outlet.

G. Manhole Adjustment Rings:

1. Concrete or HDPE.

H. Sewer Pipe Connection:

1. Watertight gasket precast into the manhole wall conforming to ASTM C 923.

2. Acceptable Products:

a. PSX Seal Gasket or approved equal.
b. A-Lok (Tullytown, Pennsylvania) or approved equal.
c. Kor-N-Seal (NPC, Incorporated, Milford, New Hampshire) or approved equal.

I. Joints:

1. Conform to ASTM C 443.

2. Joint Sealant:

a. Conform to ASTM C 990.
b. Rub-R-Nek (Henry Group, Houston, Texas) or approved equal.
c. Con-Seal (Concrete Sealants, Incorporated, New Carlisle, Ohio) or approved equal.

J. Chimney Seals

1. Urethane sealant

2. Minimum tensile strength: 3000 psi.

3. Equal to Ring Seal.

K. Coating

1. Cementitious crystalline waterproofing coating.

2. Chemical resistance testing shall have performed according to ASTM C 39-86 and ASTM C 267-77 standards.

3. Permeability tested according to CRD C48-73.

4. Equal to Xypex coating.

2.02 FRAMES AND COVERS

A. Integrated hinged Frame and Cover opening to over 100 degrees with blocking at 90 degrees to prevent accidental closure.

B. Fabricate from ductile iron.

1. Clean and smooth.

2. Free from distortion, shrinkage or other defects.

C. Combined Weight: 240 pounds, minimum (heavy duty).

D. Minimum opening of 30 inches.

E. Solid cover with “Sewer” lettering

F. Use Neenah R-1743-LM; or approved equal with the word “SEWER” on the cover for all standard manholes (and the Flow Diversion Manhole).

2.03 DROP MANHOLES

A. Install an inside manhole drop where the invert of the inlet pipe is more than 24-inches higher than the invert of the outlet pipe.

B. Drop Bowl fabricated from marine grade fiberglass.

1. Drop Bowl shall be equal to Reliner with optional hood.

C. Internal drop pipe shall be constructed of SDR 35 PVC.

PART 3 - EXECUTION

3.01 INSTALLATION

A. Construct manholes at the locations and elevations shown on the plans or as directed by the Project Engineer.

B. Refer to section 02315 for excavation and backfill requirements.

C. Install manholes so that the walls are vertically plumb.

D. Bed precast manhole bases in a minimum of 8 inches of compacted clean sand or crushed rock.

E. Construction of Invert:

1. PVC Pipe Invert Channel:

    a. Install a full length of pipe through the manhole.
    b. Form a concrete bench up to the spring-line of the pipe.
    c. Slope the concrete bench toward the channel at a ½ - inch per foot, minimum.
    d. Cut the top hemisphere of the pipe off for the entire length of the pipe through the manhole.

2. Formed Concrete Channel:

    a. Form a channel that meets the requirements outlined in 2.01B.
    b. Ensure that the channel is smooth and free of rough patches.

3. Drop Manholes shall have formed channels.

F. Connection of Sewer Main Pipe:

1. Install sanitary sewer main to manhole using an approved watertight gasket in accordance with the manufacturer's recommendations and/or as illustrated on the plan details.

G. Top Slab Section Installation:

1. Install with the opening over the outlet of the manhole.

2. Use on shallow manholes only.

H. Conical Section Installation:

1. Install with the opening over the outlet of the manhole.

2. Install 4-feet of manhole section with cylindrical configuration before installing a conical section.

3. Use on standard manholes.

I. Joint Sealants:

1. Install joint sealants around entire circumference of each manhole joint.

2. Place sealant on the lower horizontal surface of the joint.

3. Ensure that a watertight seal is provided at the joint.

Adjustment Rings:

1. Group adjustment rings in place when the manhole is constructed.

2. Install at least one adjustment ring, and no more than 12-inches of adjustment rings.

3. Discard all cracked adjustment rings.

4. Grout manhole rings on outside and inside.

J. Frame and Cover:

1. If a road finish grade exists, set manhole frames and covers to the finish grade of the road.

2. If plans indicate rim elevations, set manhole frames and covers to the elevation indicated on the plans and adjust the elevation of the frame and cover to meet field requirements as determined by the Project Engineer.

K. Chimney Seals:

1. Apply to the adjustment ring area 3 inches above the bottom of the frame, and 3 inches below the lowest adjustment ring.

2. Installation must also be in accordance with manufacturer's recommendations.

L. Manhole Coating

1. Install in accordance with manufacturer instructions.

3.02 DROP MANHOLES

A. Shall contain stainless steel hardware where applicable.

B. Cut and mount SDR 35 PVC drop pipe of appropriate diameter to Drop Bowl.

C. Pipe Bracket secured to structure with two stainless steel bolts at 4' intervals.

1. minimum 2 brackets.

D. Install appropriate pipe elbow to provide smooth transition into channel flow.

1. Invert shall be precast into manhole.

E. Installation must also follow manufacturer specifications.

3.03 PRESSURE AND LEAKAGE TESTING OF MANHOLES

A. Test all manholes using a low-pressure vacuum test after backfilling is complete.

B. Preparation:

1. Plug all lift holes.

2. Temporarily plug all pipes entering the manholes.

3. Brace all plugs to prevent them from being drawn into the manhole.

C. Testing Procedure: Test according to ASTM C 1244.

1. Place test head at the top of the manhole in accordance with manufacturer's recommendations.

2. Evacuate manhole to 4.9 psi (10 inches of mercury).

3. Determine elapsed time for the pressure to drop 0.5 psi (1 inch of mercury) from the test pressure and use the following table to determine acceptability.

Minimum Test Times for Various Manhole Diameters (ASTM C1244)

Depth (ft)	Diameter, in								
	30	33	36	42	**48**	54	60	66	72
	Times, s								
8	11	12	14	17	**20**	23	26	29	33
10	14	15	18	21	**25**	29	33	36	41
12	17	18	21	25	**30**	35	39	43	49
14	20	21	25	30	**35**	41	46	51	57
16	22	24	29	34	**40**	46	52	58	67
18	25	27	32	38	**45**	52	59	65	73
20	28	30	35	42	**50**	53	65	72	81
22	31	33	39	46	**55**	64	72	79	89
24	33	36	42	51	**59**	64	78	87	97
26	36	39	46	55	**64**	75	85	94	105
28	39	42	49	59	**69**	81	91	101	113
30	42	45	53	63	**74**	87	98	108	121

4. The time interval recorded in the field must be greater than the time listed for the length and manhole diameter being tested and for the pressure drop recorded.

5. If the pressure drop time is less than that in the table for the diameter of manhole being tested, the test shall be considered failed.

    a. Repair manhole and retest until the test passes.

D. Repair all leakage or seepage that appears during the warranty period in a Project Engineer approved method.

END OF SECTION

This Page Intentionally Left Blank

SECTION 02920
TOPSOILING, SEEDING, FERTILIZING, AND MULCHING

PART 1 - GENERAL

1.01 SUMMARY

A. This section includes topsoiling, seeding, fertilizing, and mulching areas disturbed by construction activities.

1.02 RELATED WORK (as applicable)

A. Section 02310 – Grading
B. Section 02370 – Environmental Protection

1.04 SUBMITTALS

A. Topsoil
B. Seed Mixture and Application Rate Data
C. Mulching Material

PART 2 - PRODUCTS

2.01 TOPSOIL

A. Natural loam, sandy loam, silt loam, silty clay loam, or clay loam humus-bearing soils adapted to the sustenance of plant life.

B. Neither excessively acid nor excessively alkaline.

C. Use existing onsite topsoil whenever practical

D. Any material brought into the Park shall be certified as weed-free.

2.02 SEED MIXTURE

A. Notify the COR in advance of the need for native seed from the National Park Service. Furnish signed copies by the seed vendor certifying that each lot of seed has been tested by a recognized laboratory of seed testing within 12 months of the date of delivery.

B. Seed Mixture, in pounds per acre

1. Fescue, Hard	60
2. Fescue, Red	50
3. Fescue, Chewings	40
4. Annual Ryegrass	40
5. Native Seed (Provided by NPS as available)	40
Total Seed:	230

2.03 FERTILIZER

A. Biosol Forte Organic Fertilizer shall be applied. The rate of application shall be at 1,500 pounds per acre.

B. Agricultural Limestone (85 percent CaCo3) shall be applied at a rate of 1,500 pounds per acre.

2.04 MULCHING MATERIAL

B. None required – all seeding shall be performed with hydroseeding.

PART 3 - EXECUTION

3.01 EQUIPMENT

A. Any and all equipment brought into the Park shall be thoroughly cleaned to remove any material from out of Park areas. All measures shall be taken, as required, to prevent the introduction of non-native plant and animal species into the Park.

3.02 TOPSOIL

B. After grading is completed, spread stockpiled topsoil over all disturbed areas, excluding those where another type of finished surface is being provided.

3.03 SEEDING

A. Apply all seed, fertilizer, mulch etc. using the hydraulic method only. Dry method seeding will only be allowed in otherwise inaccessible areas as approved by the COR.

B. Thoroughly clean all equipment used for applying seed and mulch. A tactifier shall be used with all seed and mulch application. No straw or hay is allowed.

C. Lightly rake soil to cover the seed with approximately ¼ inch of soil.

END OF SECTION

This Page Intentionally Left Blank

PIPE BURSTING
SECTION 02958

PART 1 GENERAL

1.1 DESCRIPTION

A. Section includes requirements to replace existing sanitary sewers using a pipe bursting system. This includes removal and replacement of service lateral connections, connections to manholes, construction of drop manholes, and placing replacement pipelines into service.

1.2 DEFINITIONS

A. Pipe Bursting: Process of splitting or fracturing the host sewer main and forcing the fragments into the surrounding soil, for the purpose of inserting a new pipe of equal or larger diameter.
   1. Accomplished by use of pneumatic, static or hydraulic bursting head, with pipe splitters as cutting wheels as needed.
   2. Mole or bursting head is directionally guided by host sewer main and towed under tension by winch, chain or rod assembly.
   3. New pipe towed or jacked in immediately behind mole or bursting head.

B. Host Sewer Main: Existing pipeline subject to pipe bursting system, made of vitrified clay, asbestos cement, polyvinyl chloride (PVC), cast iron, concrete, steel or lined pipe.

C. Replacement Pipe: Pipe inserted into host sewer main by pipe bursting system.

D. Continuous Pipe: Pipe, such as High-Density Polyethylene (HDPE) pipe, with welded joints, assembled and inserted to form continuous section between access pits.

E. Renew Lateral: Replace service lateral in public space or easement by pipe bursting, or if necessary by excavation and replacement.

1.3 QUALITY ASSURANCE

A. Follow ASTM standards.

B. Pipe Bursting System commercially proven: Minimum of 100,000 linear feet sewer main line and 1,000 linear feet of sewer service laterals of successful wastewater lining.

C. Personnel performing pipe bursting:
   1. Certified by manufacturer of pipe bursting system having successfully completed training in:
      a. Operating bursting head.
      b. Installing proposed replacement pipe.
      c. Operation and maintenance of all equipment to be used.

D. Personnel performing fusing of HDPE pipe and fittings:
   1. Certified by manufacturer of fusing equipment having successfully completed training in:
      a. Handling replacement pipe materials.
      b. Butt fusion of pipe joints, saddle fusion of fittings for service laterals.
      c. Operation and maintenance of all equipment to be used.

E. Provide information regarding production, delivery, handling, and storage aspects of replacement pipe.

F. Contractor: Internally inspect pre-bursting and post-bursting work.

1.4 SUBMITTALS

A. Submit following Section 01330.
   1. Pipe bursting plan including at minimum:
      a. Description of process to be used.
      b. Replacement pipe and fitting selection and composition.
      c. Recommended manufacturer's installation procedures.
      d. ASTM references.
      e. Layout, storage and pipe handling area requirements for maintenance of pedestrian and vehicle traffic for each project site.
   2. Plan for locating, exposing and re-connecting service laterals and restoring manhole connections.
      a. Manhole connection to include waterstop/pipe restraint.
   3. Proposed point repair method to remove sags, offset joints and constrictions or obstructions prior to bursting.
   4. Bypass pumping plan following Section 02960.
   5. Emergency plan following Section 02530. Maintain a copy of emergency plan on site for duration of project.
   6. Certification backup equipment is available and can be delivered to project sites within 24 hours.

B. Submit following Section 01450.
   1. Certificates of Compliance for raw materials, pipe, joints, fittings, and service connections.
   2. Certificates of Training for processes to be used, including joint fusion, if applicable.
      a. Include installer's name, date of issuance and process for which certified.
   3. Pre-bursting and post-bursting television inspection reports following Section 02956. Complete post-bursting inspection after bursting process, reconnection of laterals and renewals are completed.
   4. Weiring Logs: pre- and post-bursting weir readings.
      a. Mark submittals with host sewer main's sewer pipe Identification Number, Work Order number, contract number, beginning date, times, and readings, and final date, times, and readings.
   6. Pulling log to include Allowable Tensile Load (ATL) and duration of pull of the replacement pipe.
   7. Field testing results.

C. Packing list, invoice, or delivery ticket with every shipment, to contain Contract number, type and class of pipe, length, and other pertinent information.

1.5 DELIVERY AND STORAGE

A. Transport, handle, and store pipes and fittings as recommended by manufacturer.

B. Replace pipe or fittings damaged before or during installation at no additional cost to the Commission.

PART 2 PRODUCTS

2.1 PIPE BURSTING SYSTEMS

A. Pipe Insertion Method (PIM).

B. TT Technology method.

C. Tenbusch method.

D. TRS System method.

E. TTS300 methods.

F. XPANDIT method.

G. Vermeer Hammerhead mole method.

H. Nowak Pipe Reaming InneReam method.

I. Or Equal.

2.2 MATERIALS

A. General.
   1. Same for mainline and lateral.
   2. Minimum life span: 50 years.
   3. Chemically resistant to internal exposure to sewage containing small quantities of hydrogen sulfide, carbon dioxide, methane, mercaptans, kerosene, moisture, and diluted sulfuric acid.
   4. Chemically and physically resistant to external exposure of soil, bacteria, moisture, roots, and chemical attack due to material in surrounding ground.
   5. Metal in saddles, clamps and appurtenances: 300 or 304 stainless steel following ASTM A240.
   6. Elastomeric materials, gaskets, clamps, connectors: Oil resistant and manufactured following ASTM F477.
   7. Select appropriate type pipe to maintain nominal inside diameter specified for each pipe segment.
   8. Pipe and joints specifically designed for selected pipe bursting application.
      a. Threaded or solvent-cement joints and connections: Not permitted.
      b. Sectional pipe: Joint following manufacturer's recommendations and approved submittals for leak-proof stab joint method, using EPDM O-ring synthetic elastomeric gaskets.
   9. Fittings.
      a. Pressure rated and classified same as adjoining pipe.
      b. Inside diameter to match inside diameter of adjoining pipe.
      c. Designed for pipe bursting or pipe jacking applications.

B. HDPE pipe, joints, and fittings:
   1. Polyethylene: Minimum cell classification of PE 345464C for black and PE 345464E for colors following ASTM D3350.
   2. Material designation: PE 3408 following ASTM F412.
   3. Hydrostatic Design Basis at 73.4 degrees F: 1,600 psi following ASTM D2837 4. Pipe.
      a. Manufactured, sized and marked following ASTM F714.
      b. Minimum wall thickness: SDR 17.
      c. Measure length to provide continuous, homogeneous pipe from manhole to manhole with enough extra length to allow relaxing and finishing off at manholes.

d. Interior Pipe color:
   1) Use fully bonded light-colored interior liner meeting specifications above.
e. Pipe Markings:
   1) Mark following ASTM F714.
   2) Legibly marked in green to identify as sewer pipe.
f. Approved Pipe Manufacturers.
   1) Performance Pipe, Division of Chevron Phillips Chemical Company, LP.
   2) Poly Pipe.
   3) Or Equal.

5. Molded fittings.
   a. Manufactured, sized and marked following ASTM D3261.
6. Field fabricated fittings.
   a. Stock manufactured, sized and marked following ASTM F714.
7. Joint connection minimum requirements:
   a. Continuous pipe.
      1) Assemble pipe lengths in field with butt-fused joints following ASTM D2657 and approved submittals or with electrofused joints following approved submittals.
         a) In case of conflicts between ASTM D2657 and approved submittals or if the ASTM reference is nonspecific, follow approved submittals. 2) Joint strength: Equal to or greater than pipe strength.
   b. Excavations for pipe bursting insertion or depression removal made between manholes.
      1) Joint pipe ends using butt-fused joints or electrofusion coupling.
      2) With Engineer's approval, use full circle seal clamps specified herein or seal and restraint type mechanical couplings manufactured by:
         a) Dresser Piping Specialties, Universal Style 90 for HDPE by HDPE, 2-inches and smaller, and Style 711 for HDPE by HDPE, 12-inches and smaller diameter pipes.
         b) Smith-Blair, Inc., Maxi-Grip EZ for HDPE by HDPE 12-inches and smaller diameter pipes.
         c) Or equal.

C. Manhole Connection Materials.
   1. Concrete:
      a. High strength, non-shrink, chemical resistant.
      b. Cures in presence of water.
   2. Approved Manufacturers of Flexible Gasket Connector.
      a. A-Lok.
      b. Kor-N-Seal.

c. Fernco.
d. Or Equal.

3. Approved Manufacturers of Fused-on Waterstop.
   a. ISCO Industries Wall Anchor.
   b. Central Plastics Electrofusion Flex Restraint.
   c. Or Equal.
4. Approved Manufacturers of Hydrophobic Grout for Oakum Collar.
   a. Avanti AV 202.
   b. DeNeef Hydro Active Sealfoam.
   c. Or Equal.

D. Lateral Reconnections: Follow Contract Drawings.
   1. Heat fusion or electrofusion saddles.
      a. Nominal inside diameter of existing service.
      b. Made of polyethylene pipe compound following ASTM D3350 and suitable for fusion welding to polyethylene pipe.
         1) Branch saddle style or approved equal.
      c. Approved manufacturers.
         1) Molded Branch Saddle, Performance Pipe, Division of Chevron Phillips Chemical Company, LP.
         2) Poly Pipe.
         3) Electrofusion Branch Saddle, Central Plastics Company. 4) Or Equal.
   2. Insertion connections.
      a. Nominal inside diameter of existing service.
      b. Approved manufacturers.
         1) Inserta Fittings Co.
         2) Or Equal.

E. Connection Appurtenances.
   1. Use Full Circle Elastomeric Seal Clamps for joining plain ends of pipe.
      a. Rubber sleeve coupling with stainless steel shear ring.
      b. Follow ASTM C1173.
      c. Approved manufacturers:
         1) Fernco.
         2) Mission Rubber Company Flex-Seal.
         3) DFW by NDS. 4) Or Equal.
   2. Joint lubricants.
      a. Follow manufacturer recommendations.
      b. Approved methods of application.
         1) By brush.
         2) By hand.

2.3 SOURCE QUALITY CONTROL

A. Follow referenced ASTMs.

PART 3 EXECUTION

3.1 PUBLIC NOTIFICATION (If applicable)

A. Coordinate with the COR prior to commencement of work.

3.2 MAINLINE PREPARATION

A. Respond to project site within 2 hours of Engineer's notification of problem on site.
   1. Cost incurred by the Owner due to failure to respond within time frame specified may be deducted from monies owed Contractor.

B. Bypass pumping.
   1. As required.

C. Pre-bursting inspections.
   1. Perform internal inspection.
   2. Confirm, locate, and identify by building address, existing lateral connections and services attached to host sewer main. Furnish log to Engineer.
   3. Confirm host pipe is ready for bursting.
      a. Demonstrate on CCTV recording:
         1) Realigned major sags.
         2) Removed obstructions, offset joints, missing or collapsed pipe that could interfere with bursting process.
   4. Notify Engineer if bursting is not viable with pre-inspection CCTV recording to support assertion.

D. Locate and protect existing utilities prior to all excavation activities.

E. External point repairs prior to bursting.
   1. Before bursting, perform external point repair to remove sags, offset joints and bursting constrictions or obstructions that cannot be removed internally, and may impede process or prevent successful completion.

G. Maintaining invert and slope.
   1. Ascertain elevations of upstream and downstream manhole invert of host sewer main to be burst as well as intermediate point on mainline for verification that line and grade is maintained.

F. Vibration monitoring equipment: Placed where necessary when directed by Engineer.

3.3 MANHOLE PREPARATION

A. Enlarge manhole pipe openings to size sufficient to allow bursting head to pass without damaging manhole.

B. Remove manhole drop connections that interfere with bursting process.

C. Remove brick manhole and replace with precast manhole following Section 02530 and Standard Details.

3.4 BURSTING AND PIPE INSTALLATION

A. Disconnect laterals from host sewer main following approved submittals.

B. Provide access pits as required to facilitate pipe bursting insertion process.
   1. Locate pits where interference to vehicular traffic and inconvenience to public is minimized.
   2. Use sewer lateral connection locations, changes in sewer line and grade, and sags as access pit locations, and provide access to sewer from both directions.
   3. Prevent damage to adjacent areas during bursting process.

C. Do not exceed approved submittal insertion rate or force at any time. Maintain logs verifying rate and force did not exceed submitted calculations.

D. Use approved lubricant to ease installation friction. Match lubricants to soil and insertion conditions.

E. Remove irregular internal bead projections that are not uniform and rolled-back from butt-fused joints.

F. Extend DIP joints to remove slack in locking restrained joints.

G. Remove and replace improperly burst sewer mains at no additional cost to the Commission.

H. Contractor is responsible for all costs related to inaccurately located or misidentified live/active sewer lateral connections.
   1. Re-connect missed or active taps and abandon erroneously opened connections at no additional cost to the Commission.

3.5 RELAX PERIOD

A. Allow inserted HDPE pipes to rest for a period of 4 hours before cutting and trimming replacement pipe or making any manhole connections.

B. If replacement pipe exhibits retraction, at end of relax period and after flexible manhole connectors' grout has set, anchor HDPE pipe at manholes following approved submittals.

C. After relax period, cut and trim replacement pipe 3 inches inside upstream and downstream manholes.

3.6 MANHOLE RECONNECTION

A. Replace exterior drops with inside drops, following Standard Details.

B. Reconnect to manhole following approved submittals.
   1. Restrain and seal pipe at manhole wall.
   2. Use flexible gasket connector, fuse-on water stop, or hydrophobic grout-soaked oakum collar embedded in concrete poured or parged across manhole wall opening.

C. Flexible gasket connector.
   1. Preferred restraint and seal for precast manholes.
   2. Embed flexible connector in place in manhole wall, filling all voids, front and back, for full thickness of manhole wall following Standard Details.
   3. If flexible connector is not water-tight, perform pipe seal with chemical grout following Section 02957.

D. Oakum Collar.
   When flexible gasket connector or fused-on water stop is not used, use quick setting non-shrink concrete and embed replacement pipe with chemical grout-soaked oakum collar within manhole wall connection and add exterior bentonite collar following Standard Details.

3.7 FIELD TESTING

A. Air test pipe following Section 02530 prior to reconnection of lateral connections.
   1. Stabilize test pressures for replacement pipe at 4.0 PSIG with a minimum holding time of two minutes and maximum 0.5 PSIG pressure drop.
   2. Repair or replace pipelines that fail air tests and re-test at no additional cost to the Commission.

C. Perform post-bursting inspection of mainline following completion of work.

3.8 RENEW LATERALS

A. Renew laterals by pipe bursting as specified herein, within 14 days after bursting the sewer main. Follow Section 02530.
   1. Pre-renewal CCTV to confirm lateral has no depressions or obstructions to prevent the bursting.
   2. Laterals 20 linear feet or smaller: Pipe burst by sectional bursting.
   3. Laterals over 20 linear feet: Use sectional or standard method of bursting.
   4. Separate double connections.
   5. Refer the following to Engineer for resolution:
      a. Laterals with issues that prevent bursting.
      b. Connections with less than 2 percent slope.
      c. Connections that do not meet length requirements.

B. Provide elevations and logs showing confirmation of lateral grade.
   1. Position tap location to achieve required lateral grade without going beyond downstream property limits and without going below the four o'clock or eight o'clock positions respectively, within sewer main.
   2. Keep tap location in line with original lateral.
   3. When grade cannot be obtained within this criteria refer to the COR for resolution.

C. Install cleanout at property line where applicable.

D. Laterals recently renewed with PVC pipe and existing cleanout: Reconnect only.

E. Perform post-CTTV inspection of renewed lateral and mainline connection within 7 days.

F. Reconnect missed or active taps and abandon erroneously opened connections at no additional cost to the Commission.

3.9 RECONNECTION OF NON-RENEWED LATERALS

A. Perform following approved submittals.

B. Internally inspect laterals not renewed after mainline bursting.
   1. Repair any damaged laterals at no cost to the Commission.

END OF SECTION

SECTION 03300
CAST-IN-PLACE CONCRETE (NON-STRUCTURAL)

PART 1 - GENERAL

1.01 SUMMARY

A. This section includes provisions for non-structural cast-in-place concrete.

1.02 RELATED WORK

A. Section 01119 – Revisions to Standard Specifications
B. Section 03200 – Concrete Reinforcement

1.03 REFERENCES

A. ASTM C33 – Standard Specification for Concrete Aggregates.

B. ASTM C94 – Standard Specification for Ready Mix Concrete.

C. ASTM C150 – Standard Specification for Portland Cement.

D. ASTM A185 – Welded Steel Wire Fabric, Plain for Concrete Reinforcement

E. ASTM A615 – Deformed and Plain Billet-Steel Bars for Concrete Reinforcement

1.04 QUALITY ASSURANCE

A. Obtain cement and aggregate from the same source for all work.

PART 2 - PRODUCTS

2.01 CONCRETE MATERIALS

A. Cement: ASTM C150, Portland Cement Type – IA, Air Entrained.

B. Aggregates: ASTM C33.

1. Fine Aggregates:

a. Fine aggregates shall be clean, hard, tough, water sound and free of deleterious substances.

b. One hundred percent passing 3/8 inch sieve.

At least fifty percent passing No. 16 sieve.

2. Coarse Aggregates

a. Coarse aggregates shall be clean, hard, tough, water sound and free of deleterious substances.

b. Maximum aggregate size for reinforced concrete shall not be larger than 1/5 of the narrowest dimension between forms, nor larger than 3/4 of the minimum clear spacing between reinforcing bars or between bars and forms.

c. Maximum aggregate size for unreinforced slabs shall not be larger than 1/3 the slab thickness or 2 inches, whichever is smaller.

C. Mixing Water

1. Use potable water unless approved by Project Engineer.

D. Color Additive

1. Color concrete when visible to public to Federal Standard 595C #26081.

E. Material Storage

1. Store materials in such a manner as to prevent deterioration or intrusion of foreign matter.

2.02 METAL REINFORCEMENT

A. Rebar: Conforming to ASTM A615

B. Welded Wire Fabric: Conform to ASTM A185

PART 3 - EXECUTION

3.01 PLACING CONCRETE

A. Concrete shall not be placed when atmospheric temperature is below 40 degrees Fahrenheit unless authorized in writing by the Project Engineer.

B. Forms shall conform to shapes, lines and dimensions of members as called for on the plans and shall be sufficiently tight to prevent leakage of mortar.

1. Properly brace and tie forms together to maintain position and shape and prevent leakage.

C. Remove water from place of deposit before concrete is placed.

D. Moisten subgrade at the time the concrete is deposited.

E. For job mixed concrete, rotate the mix at the speed recommended by the manufacturer in a clean batch machine. Mix the materials until they are uniformly distributed.

F. Deliver and mix Ready-Mixed Concrete in accordance with ASTM C94.

G. Access to the mixing plant shall be provided to the Project Engineer.

H. Tickets indicating time of adding initial mixing water may be required by the Project Engineer.

I. Place concrete in one continuous operation, once placing is started.

J. Remove supporting forms and shoring after members have acquired sufficient strength to support their weight and imposed loads safely.

K. If concrete placement is authorized for atmospheric temperatures at or below 40 degrees Fahrenheit, concrete temperature shall not be less than 45 degrees Fahrenheit at the time of placement.

   1. Heating procedures that alter or prevent the entrainment of the required amount of air in the concrete will not be permitted.

   2. Do not heat aggregates and water used for mixing to a temperature exceeding 120 degrees Fahrenheit.

L. Air temperatures surrounding concrete shall be maintained at a temperature of not less than 45 degrees Fahrenheit, nor more than 70 degrees Fahrenheit, for a period of four days.

   1. Following the four-day period, the concrete shall be protected from air temperatures below 35 degrees Fahrenheit, for an additional four-day period.

M. Chemical or other foreign material shall not be added to the concrete.

3.02 FIELD QUALITY CONTROL

A. Concrete shall have a compressive strength of 3000 psi at 28 days.
B. The Project Engineer may require slump and compression tests.

END OF SECTION

This Page Intentionally Left Blank