# FORT BLISS, TEXAS

## BUILDING 2414
## ROOF REPLACEMENT
## & INTERIOR REPAIRS

### INDEX OF DRAWINGS


| SHEET NO. | DESCRIPTION |
|---|---|
| 1 | = COVER SHEET |
| 2 | = SITE PLAN |
| 3 | = DEMOLITION WORK PLAN - ROOF |
| 4 | = NEW WORK PLAN - ROOF |
| 5 | = DEMO\NEW WORK PLAN - 1ST FLOOR |
| 6 | = DEMO\NEW WORK PLAN - 2ND FLOOR |
| 7 | = DEMO\NEW WORK PLAN - 3RD FLOOR |
| 8 | = DETAILS |
| 9 | = DETAILS (CONTINUED) |
| 10 | = PROJECT INFORMATION SIGNAGE DETAIL |


### PROJECT LOCATION

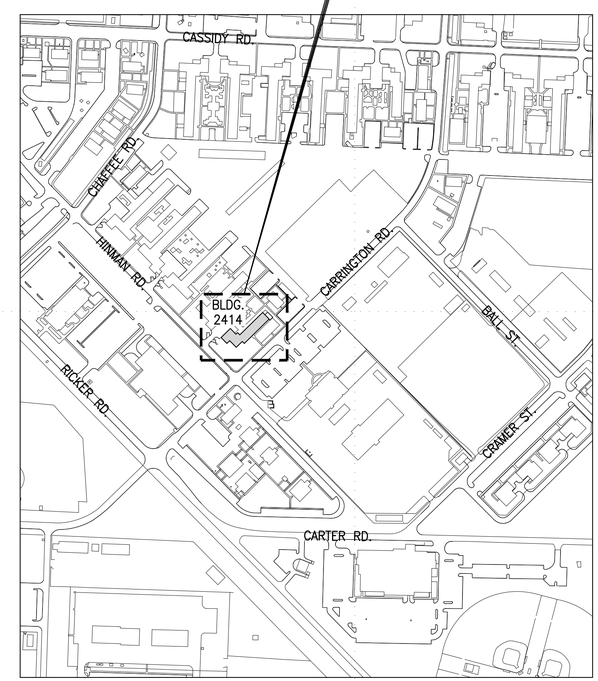


PROJECT LOCATION MAP
NOT TO SCALE

| MARK | DESCRIPTION | DATE |
|---|---|---|
| | | |

DESIGNED BY: C.R.
DATE: 05/04/2026
DRAWN BY: M.A.A.
W.O. # AMD-10098-6J
REVIEWED BY: C.R.
SPEC. #
SCALE: AS SHOWN

DIRECTORATE OF PUBLIC WORKS
FORT BLISS, TEXAS

FORT BLISS DPW

BUILDING 2414
ROOF REPLACEMENT
& INTERIOR REPAIRS

COVER SHEET

SHEET NUMBER:
CVRSHT

1 OF 10

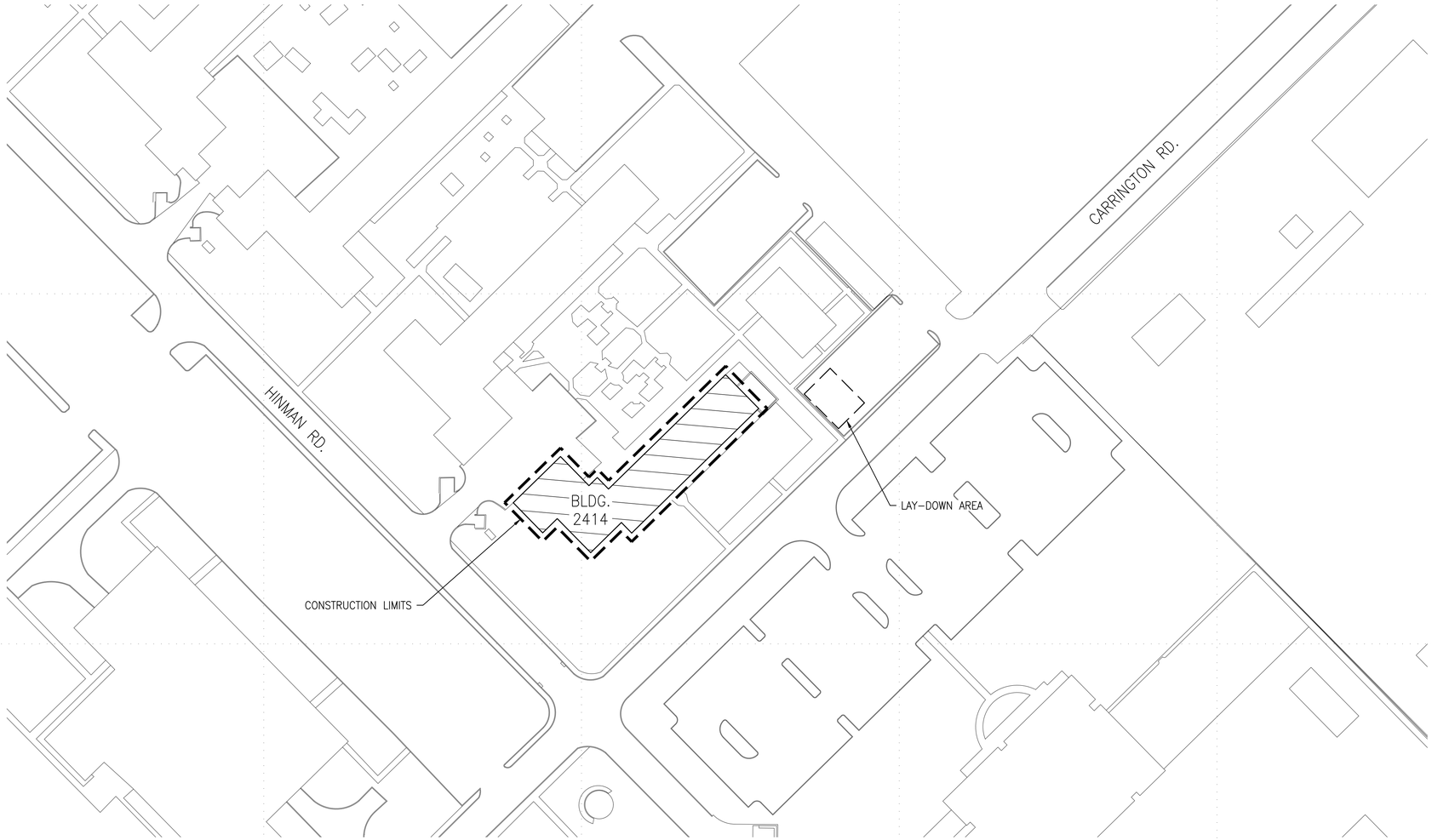


N

1 SITE PLAN
SCALE: 1"=50'

## GENERAL NOTES

1. CONTRACTOR SHALL FIELD VERIFY ALL DIMENSIONS, EXACT LOCATIONS AND QUANTITIES BEFORE COMMENCING WORK.
2. CONTRACTOR SHALL BE RESPONSIBLE TO MAINTAIN A COMPLETE SET OF CONSTRUCTION DOCUMENTS (DRAWINGS AND SPECIFICATIONS) ON SITE AT ALL TIMES AND INDICATE CHANGES AS THE PROJECT PROGRESSES.
3. CONTRACTOR SHALL UTILIZE STATEMENT OF WORK, SPECIFICATIONS, DRAWINGS AND CONTRACT TO ENSURE ALL CONSTRUCTION, DELIVERABLES, AND RESOURCES ARE DELIVERED TO THE GOVERNMENT.
4. CONTRACTOR SHALL NOTIFY CONTRACTING OFFICER'S FIELD REPRESENTATIVE IMMEDIATELY OF ANY CONFLICTS DISCOVERED IN THE FIELD IMMEDIATELY VIA RFI, TO ALLOW SUFFICIENT TIME TO REVIEW AND RESOLVE THE ISSUE.
5. PRIOR TO ANY CHANGE OR MODIFICATION TO THE DRAWINGS DUE TO ACTUAL CONDITIONS, DPW REPRESENTATIVE SHALL BE NOTIFIED FOR REVIEW AND APPROVAL.
6. CONTRACTOR SHALL MAINTAIN AND CLEAN CONSTRUCTION AREA IN ACCORDANCE WITH THE CONTRACT AND SAFETY RECOMMENDATIONS.
7. PRIOR TO CONSTRUCTION START, CONTRACTOR SHALL CONDUCT A THOROUGH PHOTOGRAPHIC SURVEY OF THE SITE. CRACKED SIDEWALKS, BROKEN WINDOWS, BENT EQUIPMENT, ETC. THIS INCLUDES INVENTORY OF ALL ITEMS ON SITE AND THEIR CONDITION. FAILURE TO DO SO MAY RESULT IN CONTRACTOR RESPONSIBILITY TO REPAIR.
8. BUILDING WILL BE OCCUPIED DURING CONSTRUCTION. PROVIDE TEMPORARY COOLING/HEATING UNITS IF NECESSARY, DURING PERIODS AC AND HEATER ARE DOWN.
9. CONTRACTOR SHALL PROVIDE BUILDING ACCESS TO USER.
10. CONTRACTOR SHALL PROVIDE AND FURNISH TRAFFIC CONTROL FOR AREA ADJACENT TO CONSTRUCTION AREA. CONTRACTOR SHALL PROVIDE ALL REQUIRED TRAFFIC CONTROL PLANS. ALL SIGNS, BARRICADES, CHANNELIZATION DEVICES, SIGN FRAMES AND ERECTION OF SUCH DEVICES SHALL CONFORM TO THE REQUIREMENTS OF THE LOCAL TRAFFIC CONTROL AUTHORITY.
11. CONTRACTOR SHALL PROVIDE VEHICULAR ACCESS TO PARKING SPACES.
12. NO OBSTRUCTIONS WILL BE PERMITTED WITHIN THREE FEET OF FIRE HYDRANTS.
13. CONTRACTOR SHALL PROVIDE TEMPORARY SUPPORT FOR ALL EXISTING UTILITIES INCLUDING BUT NOT LIMITED TO EXISTING ELECTRICAL CONDUIT, GAS LINES, WIRES, ETC., AS REQUIRED TO ALLOW FOR CONSTRUCTION.
14. CONSTRUCTION & DEMOLITION DIVERSION: FORT BLISS REQUIRES A MINIMUM OF 60% OF CONSTRUCTION WASTE AND DEMOLITION MATERIALS AND DEBRIS BE RECYCLED. IF THE CONTRACTOR HAS A VALID REASON FOR NOT BEING ABLE TO MEET THIS DIVERSION GOAL, THE CONTRACTOR NEEDS TO PRESENT THEIR REASONING IN WRITING TO DPW–ENVIRONMENTAL DIVISION FOR APPROVAL.
15. CONTRACTOR IS RESPONSIBLE TO PROTECT ALL EXISTING EQUIPMENT, MATERIALS AND FINISHES THAT ARE TO REMAIN. ANY DAMAGES SHALL BE REPLACED OR RESTORED WITHOUT ADDITIONAL COST TO THE GOVERNMENT.
16. ANY DEMOLITION DEBRIS SUSPECTED TO CONTAIN HAZARDOUS MATERIALS, SHALL BE IMMEDIATELY BROUGHT TO THE ATTENTION OF THE CONTRACTING OFFICER REPRESENTATIVE PRIOR TO CONTINUING ANY ADDITIONAL WORK.
17. ALL REMOVED EQUIPMENT SHALL BE REINSTALLED AND TESTED IN THE PRESENCE OF A CONTRACTING OFFICER REPRESENTATIVE.
18. EXISTING SITE IMPROVEMENTS DAMAGED BY THE CONTRACTOR SHALL BE REMOVED AND REPLACED BY THE CONTRACTOR AT THE CONTRACTOR'S EXPENSE.
19. ALL SURFACES IN CONTACT WITH NEW WORK THAT ARE DAMAGED DUE TO NEW WORK IN PROGRESS, SHALL BE PATCHED AND REPAIRED AS REQUIRED.
20. ALL WORK SHALL COMPLY WITH ALL MANUFACTURER'S SPECIFICATIONS/RECOMMENDATIONS, FEDERAL, STATE, AND LOCAL REGULATIONS/CODES.

## LAY–DOWN ARE NOTES

1. LAY–DOWN AREA SHALL BE DESIGNATED PRIOR TO THE START OF CONSTRUCTION. CONTRACTOR SHALL COORDINATE WITH DPW MASTER PLANNING.
2. THE CONTRACTOR SHALL RESTORE ANY ACCESS ROADS AND LAY–DOWN AREAS USED DURING CONSTRUCTION BACK TO THEIR ORIGINAL STABILIZED CONDITION OR BETTER.
3. CONTRACTOR SHALL PROVIDE AND INSTALL ALL EQUIPMENT AND SUPPLIES REQUIRED TO SECURE THE TEMPORARY STORAGE AREA.

## UTILITY NOTES

1. IT SHALL BE THE RESPONSIBILITY OF THE CONTRACTOR, WHETHER INDICATED ON THE DRAWING OR NOT, TO VERIFY THE LOCATION, DEPTH, AND CONDITION OF ALL EXITING UTILITIES AND SUBSTRUCTURES AND PROTECT THEM FROM ANY DAMAGE.
2. THE CONTRACTOR SHALL CONTACT ALL THE UTILITY COMPANIES AND CONDUCT ALL NECESSARY FIELD INVESTIGATIONS PRIOR TO ANY EXCAVATION. ANY DAMAGE TO EXISTING UTILITIES SHALL BE PROMPTLY REPAIRED BY THE CONTRACTOR AT NO EXPENSE TO GOVERNMENT.
3. NOTIFY THE DPW REPRESENTATIVE IN WRITING AT LEAST 14 DAYS BEFORE ANY UTILITY OUTAGE OR ROAD CLOSURE.

## LEGEND

CONSTRUCTION LIMITS – CONSTRUCTION AREA TO USE DEMARCATION POINTS SUCH AS FENCING, CURBS, ETC., WHEREVER FEASIBLE UNLESS OTHERWISE NOTED.

LAY DOWN YARD LOCATION TO BE SUBMITTED BY CONTRACTOR AND APPROVED BY COR & MASTER PLANNING

| MARK | DESCRIPTION | DATE |
|---|---|---|
| | | |

DESIGNED BY: C.R.
DRAWN BY: M.A.A.
REVIEWED BY: C.R.
SCALE: AS SHOWN
DATE: 05/04/2026
W.O. # AMD–10098–6J
SPEC. #

FORT BLISS DPW

DIRECTORATE OF PUBLIC WORKS
FORT BLISS, TEXAS

BUILDING 2414
ROOF REPLACEMENT
& INTERIOR REPAIRS

SITE PLAN

SHEET NUMBER:
A–100

2 OF 10

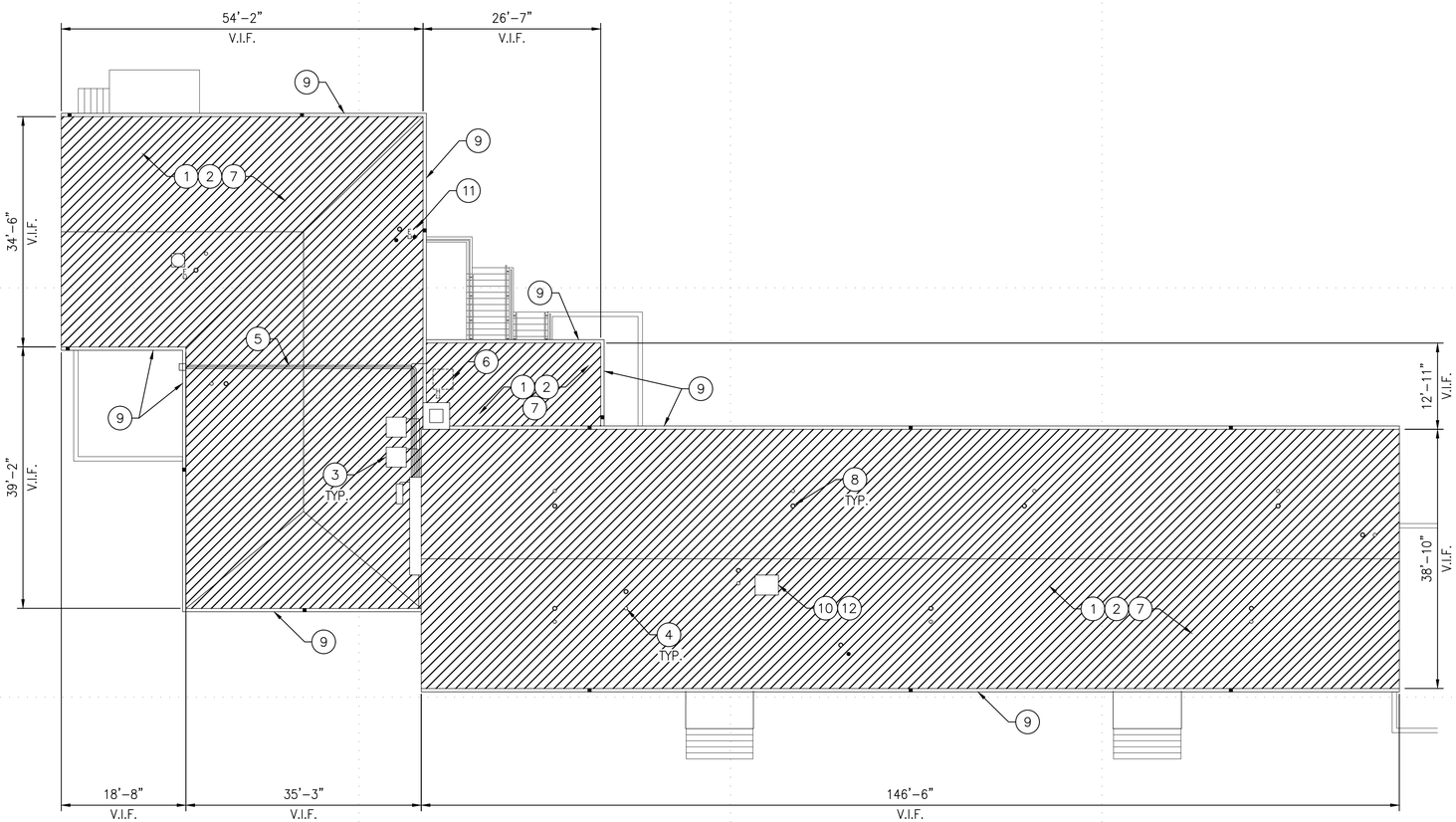


1 DEMOLITION WORK PLAN – ROOF
SCALE: 3/32"=1'-0"

## LEGEND

- EXISTING ROOF SYSTEM
- EXISTING EXHAUST FAN
- EXISTING EXHAUST VENT
- EXISTING PIPE PENETRATION
- EXISTING LIGHT SENSOR
- EXISTING ANTENNA
- EXISTING ELECTRICAL PENETRATION
- ABANDONED HVAC LINE PENETRATION
- ABANDONED HVAC STAND

## DEMOLITION GENERAL NOTES

1. THESE PLANS ARE FOR REFERENCE ONLY AND MAY NOT REFLECT ALL AVAILABLE INFORMATION, THE EXACT LOCATION AND QUANTITY OF EXISTING DUCTWORK, PENETRATIONS AND EQUIPMENT MAY DEVIATE FROM LOCATIONS AND QUANTITY SHOWN ON DRAWINGS. CONTRACTOR MUST FIELD VERIFY AND EXAMINE EXISTING STRUCTURES, NOTE ALL CONDITIONS AS TO CHARACTER AND EXTENT OF ALL WORK INVOLVED, VALIDATE AND BID ACCORDINGLY.
2. CONTRACTOR SHALL FIELD VERIFY ALL DIMENSIONS, EXACT LOCATIONS AND QUANTITIES BEFORE COMMENCING WORK.
3. GENERAL CONTRACTOR SHALL ASSURE THAT ALL SUB–CONTRACTORS HAVE REVIEWED THE ENTIRE SET OF CONSTRUCTION DOCUMENTS, THIS INCLUDES BUT NOT LIMITED TO CONSTRUCTION DRAWINGS, PROJECT MANUAL (SPECIFICATIONS), AMENDMENTS, MODIFICATIONS, AND CHANGE ORDERS. THE CONTRACT IS BASED ON CONSTRUCTION DOCUMENTS AS A WHOLE AND COORDINATION BETWEEN SUBCONTRACTOR IS THE SOLE RESPONSIBILITY OF THE GENERAL CONTRACTOR.
4. THE DEMOLITION PLAN INDICATES THE GENERAL SCOPE OF ITEMS AND EXISTING CONSTRUCTION ELEMENTS TO BE REMOVED. ANY ADDITIONAL ITEMS ENCOUNTERED IN THESE GENERAL DEMOLITION AREAS, WHICH WILL INTERFERE WITH THE NEW CONSTRUCTION SHALL ALSO BE REMOVED AT NOT ADDITIONAL COST.
5. CONTRACTOR SHALL BE RESPONSIBLE TO MAINTAIN A COMPLETE SET OF CONSTRUCTION DOCUMENTS ON SITE AND INDICATE CHANGES AS THE PROJECT PROGRESSES.
6. CONTRACTOR SHALL NOTIFY CONTRACTING OFFICER'S FIELD REPRESENTATIVE IMMEDIATELY OF ANY CONFLICTS DISCOVERED IN THE FIELD VIA RFI, ASAP TO ALLOW SUFFICIENT TIME TO REVIEW AND RESOLVE THE ISSUE.
7. CONTRACTOR SHALL ENSURE SAFE ACCESS TO BUILDING DURING CONSTRUCTION AND SHALL PROVIDE ALL REQUIRED BARRICADES, FENCING, COVERED WALKS, PLANKING, LIGHTING, BRACING, SHORING, WARNING SIGNS, ETC. AS REQUIRED BY OSHA AND FORT BLISS REGULATIONS FOR THE PROTECTION OF WORKMEN, STAFF AND USERS.
8. CONTRACTOR SHALL PROTECT ALL GOVERNMENT PROPERTY TO INCLUDE CARS, EQUIPMENT AND BUILDING SYSTEMS.
9. THE CONTRACTOR IS RESPONSIBLE TO PROTECT ALL EXISTING EQUIPMENT, MATERIALS, AND FINISHES THAT ARE TO REMAIN AND WITHOUT UNNECESSARY DAMAGE. ITEMS AND MATERIAL TO BE REMOVED SHALL BE DONE IN SUCH A MANNER AS TO PREVENT DAMAGES TO ITEMS AND MATERIALS THAT REMAIN. SUCH DAMAGES SHALL BE REPAIRED OR REPLACED TO THE SATISFACTION OF THE DPW REPRESENTATIVE AND AT NO ADDITIONAL COST TO THE GOVERNMENT. ITEMS INCLUDE BUT ARE NOT LIMITED TO BROKEN CURBS, CRACKED SIDEWALKS, ETC.
10. THE CONTRACTOR SHALL OVERSEE CLEANING AND ENSURE THAT THE PREMISES ARE MAINTAINED RUBBISH FREE DURING DEMOLITION WORK. FINAL CLEANUP IS THE RESPONSIBILITY OF THE CONTRACTOR.
11. ALL WORK SHALL COMPLY WITH THE MANUFACTURER'S SPECIFICATIONS/RECOMMENDATIONS, FEDERAL, STATE, AND LOCAL CODES.
12. THE GOVERNMENT RESERVES THE FIRST RIGHT OF REFUSAL FOR ALL DEMOLITION ITEMS. THOSE DEMOLITION ITEMS THE GOVERNMENT DOES NOT WISH TO KEEP SHALL BECOME PROPERTY OF THE CONTRACTOR FOR PROPER DISPOSAL.
13. ANY ITEMS SCHEDULED FOR DEMOLITION SUSPECTED TO CONTAIN HAZARDOUS MATERIALS, SHALL BE IMMEDIATELY BROUGHT TO THE ATTENTION OF THE COR PRIOR TO DEMOLITION.
14. CONTRACTOR TO VALIDATE/VERIFY LEAD OR ASBESTOS MATERIAL TO BE REMOVED/ABATED. CONTRACTOR SHALL COMPLY WITH ALL REGULATORY REQUIREMENTS APPLICABLE TO LEAD AND ASBESTOS ABATEMENT AS INDICATED IN SURVEYS AND TESTED.
15. CONTRACTOR SHALL IDENTIFY AREAS OF ROOF DECK WHERE CRACKS, SPALLING, DETERIORATION AND/OR OTHER STRUCTURAL DAMAGE IS EVIDENT AND REPAIR IS NECESSARY FOR GOVERNMENT CONSIDERATION. CONTRACTOR SHALL BID 700 SF OF CONCRETE ROOF DECK REPAIR AND 200 SF OF STEEL DECK REPLACEMENT DUE TO WATER DAMAGE.
16. CONTRACTOR TO LIFT ALL MECHANICAL EQUIPMENT IN PLACE TO ALLOW FOR CONSTRUCTION AND REINSTALL ONCE CONSTRUCTION IS COMPLETE.
17. CONTRACTOR SHALL PROVIDE TEMPORARY SUPPORT FOR ALL EXISTING UTILITIES INCLUDING BUT NOT LIMITED TO ELECTRICAL CONDUIT, GAS LINES, WIRES, ETC., AS REQUIRED TO ALLOW FOR CONSTRUCTION.
18. SECURE AND SAFEGUARD EXISTING AND\OR NEW GAS LINES EXPOSED ON THE ROOF. PRIME WITH ONE COAT AND PROVIDE TWO COATS OF SAFETY YELLOW PAINT.
19. ANY ABANDONED PENETRATIONS SHALL BE REMOVED AND THE DECK REPAIRED PRIOR TO INSTALLATION OF THE NEW ROOF SYSTEM. SECURE ALL SLEEVES AND PIPES BEFORE ROOF MATERIAL IS REMOVED.

## DEMOLITION GENERAL NOTES (CONTINUED)

20. CONTRACTOR WILL FIELD VERIFY BEFORE REMOVING ANY ABANDONED PENETRATIONS.
21. ALL EQUIPMENT TO BE REMOVED SHALL BE DONE SO IN THE PRESENCE OF A GOVERNMENT REPRESENTATIVE AND INSTALLED AND TESTED IN THE PRESENCE OF A GOVERNMENT REPRESENTATIVE.
22. CONSTRUCTION & DEMOLITION DIVERSION: FORT BLISS REQUIRES A MINIMUM OF 60% OF CONSTRUCTION AND DEMOLITION MATERIALS AND DEBRIS FROM LANDFILLS. IF THE CONTRACTOR HAS A VALID REASON FOR NOT BEING ABLE TO MEET THIS DIVERSION GOAL, THE CONTRACTOR NEEDS TO PRESENT THEIR REASONING IN WRITING TO DPW–ENVIRONMENTAL DIVISION.
23. THE CONTRACTOR SHALL NOT EMPLOY FORT BLISS TRASH BINS TO DISPOSE OF CONSTRUCTION MATERIALS.
24. BURNING ON FORT BLISS PROPERTY IS NOT PERMITTED.

## DEMOLITION KEY NOTES

1. EXISTING CONCRETE DECK, BUILDING ADDITIONS MAY HAVE STEEL ROOF DECK. CONTRACTOR TO INCLUDE THE COST OF ROOF CORES AT ALL ROOF LEVELS TO VERIFY EXISTING CONSTRUCTION.
2. CONTRACTOR SHALL REMOVE EXISTING ROOFING SYSTEM IN ITS ENTIRETY DOWN TO THE STRUCTURAL DECK. CLEAN AND PREPARE SURFACE FOR NEW ROOFING SYSTEM. CONTRACTOR TO INCLUDE 700 SF OF STRUCTURAL CONCRETE ROOF DECK REPAIR AND 200 SF OF STEEL DECK REPLACMENT/INFILL IN BID, REFERENCE DEMOLITION GENERAL NOTE #15.
3. EXISTING HVAC UNIT TO BE REMOVED AND PROTECTED TO ALLOW FOR CONSTRUCTION. REMOVE ALL EXISTING CONDENSATE DRAIN LINES. REMOVE ALL EXISTING ROOF CURBS AT ALL HVAC EQUIPMENT TO ALLOW FOR NEW TPO ROOFING SYSTEM INSTALLATION. PREPARE FOR NEW ROOF CURBS AND FLASHING.
4. REMOVE ALL FLASHING AT ALL EXISTING ROOF PIPE PENETRATIONS AND PREPARE FOR NEW FLASHING. EXISTING VENT PIPING SHALL BE RAISED TO ACCOUNT FOR NEW ROOF HEIGHT DUE TO NEW INSULATION. CONTRACTOR TO PROVIDE TEMPORARY COOLING AND HEATING DURING PERIODS WHEN AC AND HEATER ARE NOT OPERATIONAL DUE TO CONSTRUCTION.
5. ALL EXISTING GAS LINES ON ROOF TO BE REMOVED AND REPLACED.
6. REMOVE ANY EXISTING, ABADONED HVAC STANDS.
7. CONTRACTOR TO NOTIFY COR OF ANY ISSUES AT THE EXPANSION JOINTS ONCE EXISTING ROOF SYSTEM IS REMOVED.
8. REMOVE ALL FLASHING AT ALL ROOF VENTS, PREPARE FOR NEW FLASHING.
9. REMOVE EXISTING METAL GUTTERS AND DOWNSPOUT TO REMAIN. CAREFULLY REMOVE. ORIGINAL ANCHOR POINTS ON BUILDING SHOULD BE REUSED FOR REINSTALLATION OF NEW DOWNSPOUTS ONCE CONSTRUCTION IS COMPLETE.
10. EXISTING ROOF HATCH.
11. ALL EXISTING ANTENNA AND ELECTRICAL WEATHERHEADS ARE TO BE PROTECTED DURING CONSTRUCTION. CONTRACTOR SHALL REMOVE ANTENNA IF NECESSARY TO ALLOW FOR CONSTRUCTION AND REINSTALL ONCE CONSTRUCTION IS COMPLETE.
12. REMOVE EXISTING FIXED WALL ROOF ACCESS LADDER (AT INTERIOR SOUTH STAIRWELL) AND PREPARE FOR NEW FIXED LADDER.

| MARK | DESCRIPTION | DATE |
|---|---|---|
| | | |

DESIGNED BY: C.R.
DRAWN BY: M.A.A.
REVIEWED BY: C.R.
SCALE: AS SHOWN
DATE: 05/04/2026
W.O. # AMD–10098–6J
SPEC. #

FORT BLISS DPW

DIRECTORATE OF PUBLIC WORKS
FORT BLISS, TEXAS

BUILDING 2414
ROOF REPLACEMENT
& INTERIOR REPAIRS

DEMOLITION WORK PLAN – ROOF

SHEET NUMBER:
A–101

3 OF 10

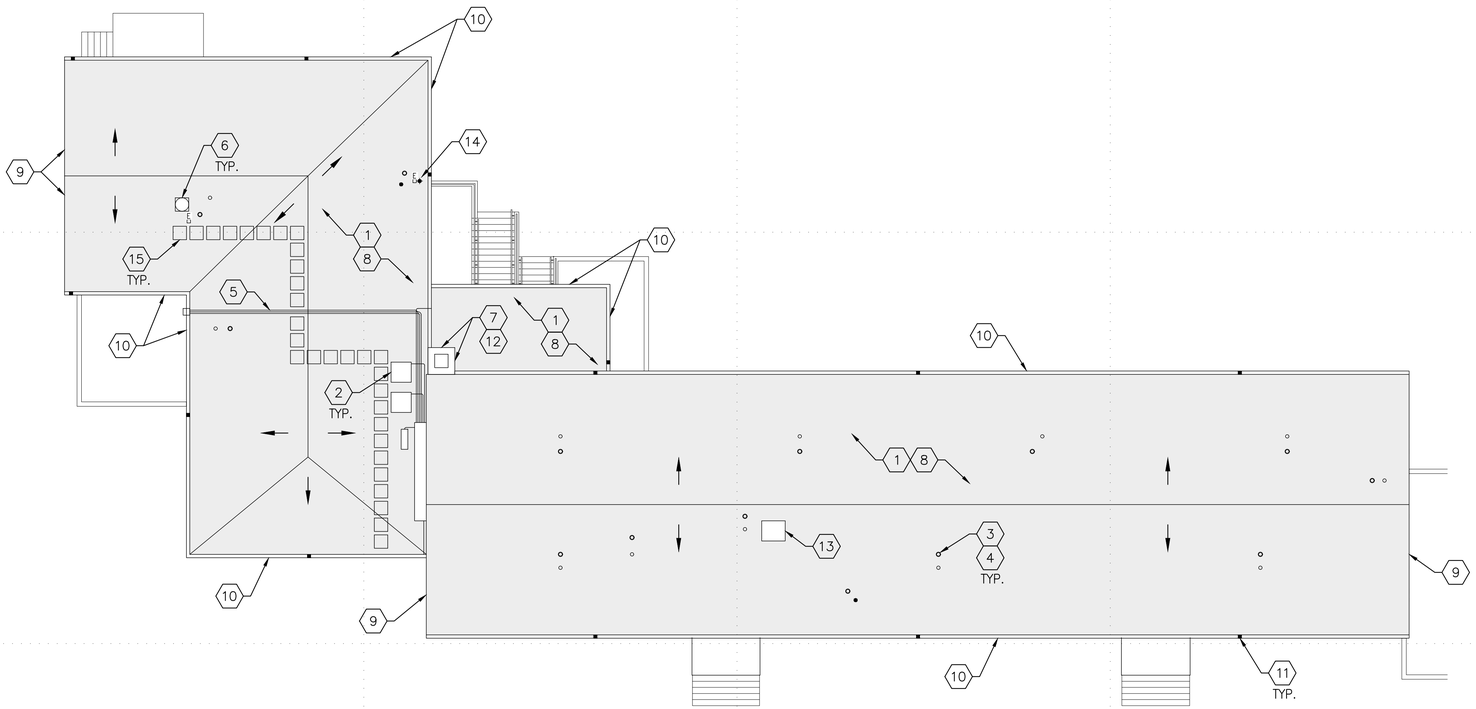


1 NEW WORK PLAN – ROOF
SCALE: 3/32"=1'-0"

## LEGEND

- NEW ROOF SYSTEM
- EXISTING EXHAUST FAN
- EXISTING EXHAUST VENT
- EXISTING PIPE PENETRATION
- EXISTING LIGHT SENSOR
- EXISTING ANTENNA
- EXISTING ELECTRICAL PENETRATION

## NEW WORK GENERAL NOTES

1. THESE PLANS ARE FOR REFERENCE ONLY AND MAY NOT REFLECT ALL AVAILABLE INFORMATION, THE EXACT LOCATION AND QUANTITY OF EXISTING DUCTWORK, PENETRATIONS AND EQUIPMENT MAY DEVIATE FROM LOCATIONS AND QUANTITY SHOWN ON DRAWINGS. CONTRACTOR MUST FIELD VERIFY AND EXAMINE EXISTING STRUCTURES, NOTE ALL CONDITIONS AS TO CHARACTER AND EXTENT OF ALL WORK INVOLVED, VALIDATE AND BID ACCORDINGLY.
2. CONTRACTOR SHALL FIELD VERIFY EXISTING CONDITIONS, ALL DIMENSIONS, EXACT LOCATIONS AND QUANTITY BEFORE COMMENCING WORK.
3. GENERAL CONTRACTOR SHALL ASSURE THAT ALL SUB–CONTRACTORS HAVE REVIEWED THE ENTIRE SET OF CONSTRUCTION DOCUMENTS, THIS INCLUDES BUT NOT LIMITED TO CONSTRUCTION DRAWINGS, PROJECT MANUAL (SPECIFICATIONS), AMENDMENTS, MODIFICATIONS, AND CHANGE ORDERS. THE CONTRACT IS BASED ON CONSTRUCTION DOCUMENTS AS A WHOLE AND COORDINATION BETWEEN SUBCONTRACTOR IS THE SOLE RESPONSIBILITY OF THE GENERAL CONTRACTOR.
4. CONTRACTOR SHALL BE RESPONSIBLE TO MAINTAIN A COMPLETE SET OF CONSTRUCTION DOCUMENTS ON SITE AND INDICATE CHANGES AS THE PROJECT PROGRESSES.
5. CONTRACTOR SHALL NOTIFY CONTRACTING OFFICER'S FIELD REPRESENTATIVE IMMEDIATELY OF ANY CONFLICTS DISCOVERED IN THE FIELD VIA RFI, ASAP TO ALLOW SUFFICIENT TIME TO REVIEW AND RESOLVE THE ISSUE.
6. CONTRACTOR SHALL ENSURE SAFE ACCESS TO BUILDING DURING CONSTRUCTION AND SHALL PROVIDE ALL REQUIRED BARRICADES, FENCING, COVERED WALKS, PLANKING, LIGHTING, BRACING, SHORING, WARNING SIGNS, ETC. AS REQUIRED BY OSHA AND FORT BLISS REGULATIONS FOR THE PROTECTION OF WORKMEN, STAFF AND USERS.
7. ALL WORK SHALL COMPLY WITH THE MANUFACTURER'S SPECIFICATIONS/RECOMMENDATIONS, FEDERAL, STATE, AND LOCAL CODES.
8. NO NEW MATERIALS SHALL CONTAIN ASBESTOS, LEAD, OR ANY REGULATED MATERIALS.
9. THE INSTALLATION OF TAPERED INSULATION, AS SHED RAINWATER, THE FALL SHOULD BE PREFERABLE 1:40 WITH THE MINIMUM 270 MM THICK. USE THE FOUR–WAY INSULATION METHOD TO DRAIN THE ROOF.
10. ALL ROOF PENETRATION AND FLASHING WORK SHALL BE THE RESPONSIBILITY OF ROOFING CONTRACTOR USING MANUFACTURER'S STANDARD DETAILS AND SHALL BE COVERED AS PART OF THE MANUFACTURER'S WARRANTY. CONTRACTOR WILL PROVIDE ALL NEW ACCESSORIES, PIPE SUPPORTS, PIPE BOOTS, CANT STRIPS, ETC. SUPPORTS SHALL NOT PENETRATE THE NEW ROOF SYSTEM.
11. ALL SHEET METAL INCLUDING COPING, GUTTERS, FLASHING, TRIM, LEADER BOXES AND LEADERS ARE TO BE SUPPLIED BY METAL ROOFING MANUFACTURER AND INSTALLED ACCORDING TO MANUFACTURERS INSTRUCTIONS. ALL GAUGES OF SHEET METAL SHALL BE ACCORDING TO MANUFACTURERS RECOMMENDATIONS.
12. ALL ROOF AND WALL PANEL TERMINATIONS, COPING, EDGE METAL, SHALL MEET ES–1 STANDARDS.
13. SECURE AND SAFEGUARD EXISTING AND\OR NEW GAS LINES EXPOSED ON THE ROOF. PRIME WITH ONE COAT AND PROVIDE TWO COATS OF SAFETY YELLOW PAINT.
14. CONTRACTOR SHALL IDENTIFY AREAS OF ROOF WHERE ROOF DECK OR STRUCTURAL REPAIRS ARE NEEDED FOR GOVERNMENT CONSIDERATION. UNLESS NOTED OTHERWISE, CONTRACTOR WILL BID ON AN ESTIMATED 500 SF OF ROOF DECK AREA TO BE REPLACED DUE TO CORROSION AND PROVIDE FULL REPLACEMENT TO INCLUDE STEEL ANGLE REINFORCEMENT SUPPORT AS NEEDED.
15. PROVIDE TAPERED INSULATION CRICKETS AT HIGH SIDES OF ALL ROOF MOUNTED EQUIPMENT, SKYLIGHTS, CORNERS, ETC. AND ALONG WALLS AS REQUIRED TO PROVIDE POSITIVE DRAINAGE. SLOPE FOR ALL CRICKETS SHALL MATCH THE ADJACENT ROOF ASSEMBLY, SLOPE = 1/4" PER FOOT. REFER TO NRCA ROOFING MANUAL, CURRENT EDITION.
16. EXISTING CONCRETE SPLASH BLOCKS TO REMAIN.
17. PROVIDE AND INSTALL SIX, STAINLESS STEEL, MINIMUM 5,000 LB (22.2 kN) TENSILE STRENGTH 'D' RING TYPE PERMANENT FALL PROTECTION ROOF ANCHORS. ROOF ANCHORS SHALL COMPLY WITH OSHA 1926.502. INSTALL IN ACCORDANCE WITH MANUFACTURERS INSTRUCTIONS.
18. REMOVE AND REPLACE ALL DAMAGED NAILERS, SOFFIT, AND FASCIA BOARDING TO MATCH EXISTING MATERIALS.
19. ALL SURFACES IN CONTACT WITH NEW WORK THAT ARE DAMAGED DUE TO NEW WORK IN PROGRESS, SHALL BE PATCHED AND REPAIRED AS REQUIRED.
20. EXISTING SITE DAMAGED BY THE CONTRACTOR SHALL BE REMOVED AND REPLACED BY THE CONTRACTOR AT THE CONTRACTOR'S EXPENSE. ITEMS INCLUDE BUT ARE NOT LIMITED TO BROKEN CURBS, CRACKED SIDEWALKS, ETC.
21. CONSTRUCTION & DEMOLITION DIVERSION: FORT BLISS REQUIRES A MINIMUM OF 60% OF CONSTRUCTION AND DEMOLITION MATERIALS AND DEBRIS FROM LANDFILLS. IF THE CONTRACTOR HAS A VALID REASON FOR NOT BEING ABLE TO MEET THIS DIVERSION GOAL, THE CONTRACTOR NEEDS TO PRESENT THEIR REASONING IN WRITING TO DPW–ENVIRONMENTAL DIVISION.
22. THE CONTRACTOR SHALL NOT EMPLOY FORT BLISS TRASH BINS FOR DISPOSE OF CONSTRUCTION MATERIALS.
23. BURNING ON FORT BLISS PROPERTY IS NOT PERMITTED.

## NEW WORK KEY NOTES

1. PROVIDE FLEECE BACK REINFORCED THERMOPLASTIC POLYOLEFIN (TPO) MEMBRANE ROOFING SYSTEM WITH 5/8 INCH GLASS–MAT ROOF BOARD OVER POLYISOCYANURATE (POLYISO) FOAM BOARD INSULATION SYSTEM (R–38) WITH FACER MATERIAL. INSTALL IN ACCORDANCE WITH ROOFING MANUFACTURERS DETAILS REQUIRED TO MEET MANUFACTURER'S 30 YEAR ROOF WARRANTY 120 MPH WIND SPEED COVERAGE. ROOFING SYSTEM INCLUDING ALL FLASHING TO BE VALIDATED AND INSPECTED BY MANUFACTURER'S REPRESENTATIVE DURING AND AFTER CONSTRUCTION COMPLETION.
2. NEW PREFABRICATED ROOF CURBS AT ALL HVAC UNITS. CURB TO BE 8 INCHES MIN. ABOVE NEW ROOF SYSTEM ELEVATION. ROOF MATERIAL SHALL GO UP AND OVER TOP OF NEW CURB WITH FLASHING, REFERENCE DETAILS, THIS SET.
3. CONTRACTOR TO RAISE ALL VENT PIPING TO ACCOUNT FOR THE NEW ROOF ELEVATION.
4. NEW PRE–MANUFACTURED TPO MEMBRANE PIPE BOOTS AT ALL PIPE PENETRATIONS. PROVIDE MANUFACTURER REQUIRED SEALANT AT THE TOP OF ALL BOOT FLASHINGS IN ACCORDANCE WITH ROOF MANUFACTURER'S REQUIREMENTS. INSTALL IN ACCORDANCE WITH ROOFING MANUFACTURERS DETAILS REQUIRED TO MEET MANUFACTURER'S 30 YEAR ROOF WARRANTY 120 MPH WIND SPEED COVERAGE.
5. ALL NEW STEEL GAS PIPE, JOINTS AND FITTINGS ON PIPE SUPPORTS. CONTRACTOR TO INCLUDE THE COST OF GAS PRESSURE TEST IN ACCORDANCE WITH FORT BLISS GAS REQUIREMENTS. PAINT SAFETY YELLOW.
6. PROVIDE NEW FLASHING AND NEUTRAL CURING SILICONE (NS) SEALANT AT EXHAUST FANS. INSTALL IN ACCORDANCE WITH ROOFING MANUFACTURERS DETAILS REQUIRED TO MEET MANUFACTURER'S 30 YEAR ROOF WARRANTY 120 MPH WIND SPEED COVERAGE.
7. NEW BASE FLASHING, TERMINATION BARS, FLASHING, COUNTERFLASHING AND NEUTRAL CURING SILICONE SEALANT AT ALL PARAPET AND/OR SIDE WALLS IN ACCORDANCE WITH ROOF MANUFACTURER'S 30 YEAR ROOF WARRANTY 120 MPH WIND SPEED COVERAGE.
8. PROVIDE NEW TAPERED RIGID INSULATION AND CANT STRIPS WITH A MINIMUM SLOPE OF 1/4 INCH PER FOOT.
9. PROVIDE 22–GAUGE GALVANIZED STEEL METAL DRIP EDGE PREFINISHED WITH PVDF COATING FOR EXTERIOR ARCHITECTURAL USE. COLOR TO BE DETERMINED BY COR.
10. REMOVE AND PROVIDE ALL NEW 24–GAUGE GALVANIZED STEEL GUTTERS PREFINISHED WITH PVDF COATING FOR EXTERIOR ARCHITECTURAL USE. COLOR TO BE DETERMINED BY COR.
11. NEW 22–GAUGE GALVANIZED STEEL DOWNSPOUTS PREFINISHED WITH PVDF COATING FOR EXTERIOR ARCHITECTURAL USE. COLOR TO BE DETERMINED BY COR.
12. CONTRACTOR TO INCLUDE THE COST TO REPAIR AND PAINT 60 SQUARE FOOT AREA OF THREE COAT STUCCO IN BID. CONTRACTOR AND COR TO IDENTIFY AND VALIDATE AREAS FOR REPAIR.
13. NEW HEAVY DUTY FIXED STEEL ROOF ACCESS LADDER WITH WELDED ASSEMBLIES AT INTERIOR OF SOUTH STAIRWELL. PROVIDE 3/4 INCH CORRUGATED STEEL ROUND RUNGS SPACED 12 INCHES ON CENTER AND 7 INCH STAND OFF BRACKETS. LADDER SHALL BE POWER COATED SAFETY YELLOW. LADDER SHALL MEET OSHA AND ANSI STANDARDS.
14. REINSTALL EXISTING ANTENNA WITH APPROPRIATE FASTENERS AND NEUTRAL CURING SILICONE (NS) SEALANT.
15. PROVIDE FULLY ADHERED ROOF WALK PADS AS MANUFACTURED BY ROOF MANUFACTURER.

| MARK | DESCRIPTION | DATE |
|---|---|---|
| | | |

DESIGNED BY: C.R.
DATE: 05/04/2026
DRAWN BY: M.A.A.
W.O. # AMD–10098–6J
REVIEWED BY: C.R.
SPEC. #
SCALE: AS SHOWN

DIRECTORATE OF PUBLIC WORKS
FORT BLISS, TEXAS

FORT BLISS DPW

BUILDING 2414
ROOF REPLACEMENT
& INTERIOR REPAIRS

NEW WORK PLAN – ROOF

SHEET NUMBER:
A–102

4 OF 10

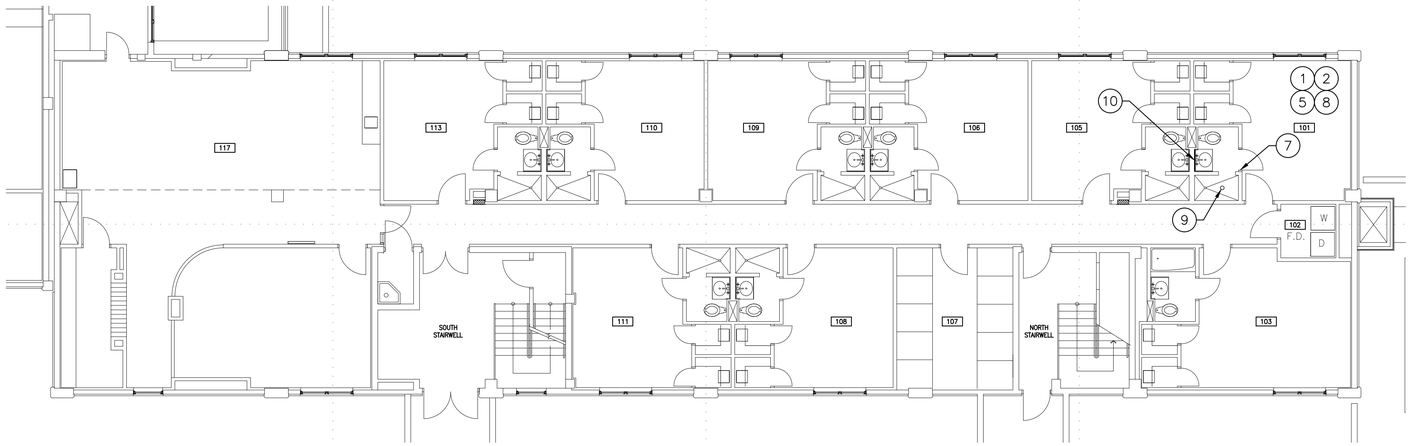


1 DEMOLITION WORK PLAN – 1ST FLOOR
SCALE: 3/32"=1'-0"

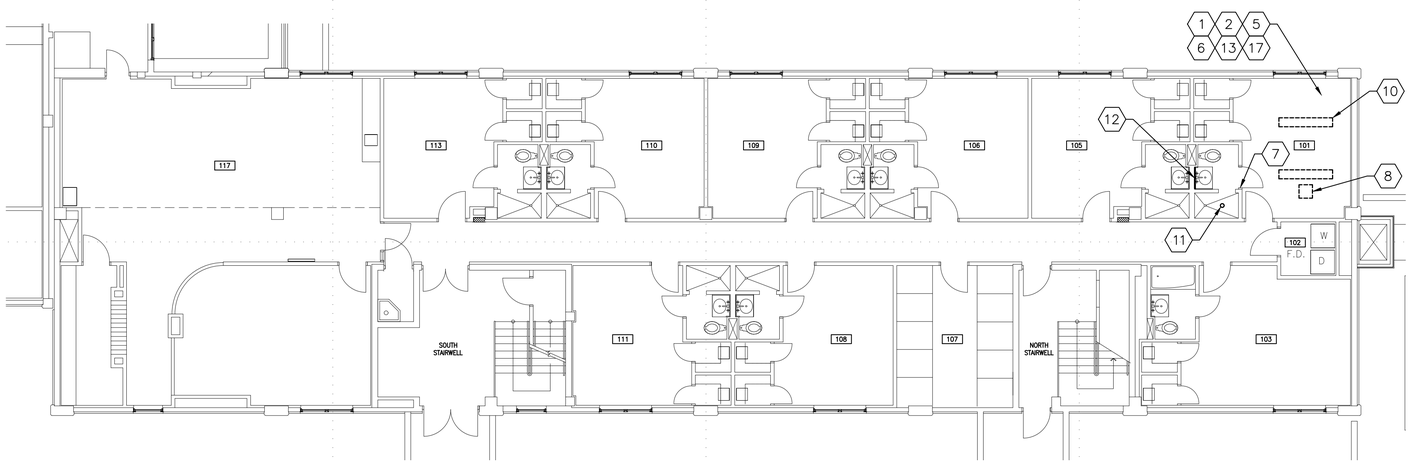


1 NEW WORK PLAN – 1ST FLOOR
SCALE: 3/32"=1'-0"

## DEMOLITION WORK NOTES

NOTE: TEMPORARILY STRAP AND PROTECT ALL EXISTING FIRE DEVICES, AND DIFFUSERS TO ALLOW FOR CONSTRUCTION AND REINSTALL ONCE WORK IN COMPLETE. CONTRACTOR TO FIELD VERIFY EXISTING CONDITIONS AND TAKE PHOTO DOCUMENTATION FOR RECORD PURPOSES PRIOR TO CONSTRUCTION. CONTRACTOR TO COORDINATE FIRE ALARM TEST WITH FORT BLISS FIRE AND DPW PM PRIOR TO CONSTRUCTION AND ONCE CONSTRUCTION IS COMPLETE TO ENSURE ALL DEVICES ARE WORKING PROPERLY. WORK SHALL BE DONE BY A CERTIFIED FIRE ALARM CONTRACTOR.

1. REMOVE EXISTING GYPSUM BOARD CEILING AND ALL ASSOCIATED COMPONENTS AT BEDROOM, CLOSET AND BATHROOM.
2. REMOVE AN ADDITIONAL 125 SF OF GYPSUM BOARD AT WALLS, AREAS TO BE IDENTIFIED AND VALIDATED WITH COR AND CONTRACTOR.
3. REMOVE AN ADDITIONAL 300 SF OF GYPSUM BOARD AT WALLS, AREAS TO BE VALIDATED WITH COR AND CONTRACTOR.
4. REMOVE EXISTING GYPSUM BOARD AND ASSOCIATED WALL BASE AT SOUTH WALL IN ITS ENTIRETY (WET WALL). EXISTING CASEWORK AND SINK TO REMAIN, PROTECT DURING CONSTRUCTION.
5. REMOVE EXISTING VINYL COMPOSITION TILE (VCT) IN BEDROOM AREA AND ALL CLOSETS INCLUDING RESILIENT WALL BASE, AND TRANSITIONS TRIPS, AND PREPARE CONCRETE FOR NEW FLOORING.
6. REMOVE EXISTING RESILIENT WALL BASE.
7. AT BATHROOM HOLLOW METAL DOOR FRAME (BOTH SIDES), CLEAN AND REMOVE CORROSION USING WIRE BRUSHING, SANDING OR CHEMICAL MEANS. SAND TO ENSURE PROPER PAINT ADHESION.
8. REMOVE EXISTING 1–FOOT X 4–FOOT RECESSED MOUNTED LIGHT FIXTURES, EXISTING J–BOX AND ASSOCIATE WIRING TO REMAIN.
9. REMOVE EXISTING RECESSED LIGHT FIXTURE LOCATED OVER THE SHOWER, EXISTING J–BOX AND ASSOCIATE WIRING TO REMAIN.
10. REMOVE EXISTING BATHROOM LIGHT FIXTURE, EXISTING J–BOX AND ASSOCIATE WIRING TO REMAIN.
11. ROOF ACCESS LADDER, SEE ROOF DEMOLITION AND NEW WORK PLANS.

## NEW WORK NOTES

1. NEW DRYWALL SUSPENSION SYSTEM INCLUDING TYPE 'X' GYPSUM BOARD AND MOLD/MOISTURE RESISTANT GYPSUM BOARD AT BATHROOMS, TAPE, BED, AND TEXTURE. PAINT 2 COATS.
2. PROVIDE 125 SF OF NEW GYPSUM BOARD AT WALLS, AREAS TO BE IDENTIFIED AND VALIDATED WITH COR AND CONTRACTOR. PROVIDE NEW TYPE 'X' GYPSUM BOARD AND INCLUDE TAPE, BED, TEXTURE, AND PAINT.
3. PROVIDE 300 SF OF NEW GYPSUM BOARD AT WALLS, AREAS TO BE IDENTIFIED AND VALIDATED WITH COR AND CONTRACTOR. PROVIDE NEW TYPE 'X' GYPSUM BOARD AND INCLUDE TAPE, BED, TEXTURE, AND PAINT.
4. AT ROOM 307 AND SOUTH STAIRWELL, CLEAN AND PAINT EXISTING CONCRETE CEILING WHERE WATER DAMAGE IS EVIDENT.
5. FILL CRACKS, GROOVES, VOIDS, DEPRESSIONS, AND OTHER MINOR IMPERFECTIONS WITH ARDEX (OR APPROVED EQUAL) CEMENT–BASED PATCHING/LEVELING COMPOUNDS AT ALL EXISTING CONCRETE PRIOR TO INSTALLATION OF SCHEDULED FLOORING.
6. NEW VINYL COMPOSITION TILE (VCT) – 12" X 12" X 1/8" INCLUDING ADHESIVE. APPLY A HIGH–QUALITY STAIN–RESISTANT SEALER BELOW TWO COATS OF HIGH–QUALITY COMMERCIAL FLOOR POLISH.
7. CLEAN AND REMOVE CORROSION AT HOLLOW METAL DOOR FRAME (BOTH SIDES), USING WIRE BRUSHING, SANDING OR CHEMICAL MEANS. SAND TO ENSURE PROPER PAINT ADHESION. PROVIDE TWO COATS OF FIELD APPLIED RUST INHIBITIVE PRIMER AND PAINT.
8. PROVIDE 18–INCH X 18–INCH FIRE RATED CEILING ACCESS PANEL. LOCATION TO BE DETERMINED IN FIELD. PAINT TO MATCH CEILING.
9. PROVIDE 12–INCH X 12–INCH WALL ACCESS PANEL. PAINT TO MATCH WALL.
10. PROVIDE NEW LED SURFACE MOUNTED LIGHTS (TWO).
11. NEW RECESSED WET LOCATION LIGHT FIXTURE LOCATED OVER THE SHOWER.
12. NEW WET LOCATION BATHROOM LIGHT FIXTURE.
13. 4–INCH TRADITIONAL RUBBER WALL BASE WITH TOE.
14. AT 'WET' WALL, PROVIDE TYPE 'X' MOLD/MOISTURE RESISTANT GYPSUM BOARD AND NEW WASHING MACHINE WALL BOX WITH CENTER DRAIN. TAPE, BED, TEXTURE, AND PAINT NEW GYPSUM BOARD WALL. PAINT ALL WALLS AND CEILING, 2 COATS.
15. CLEAN AND PAINT EXISTING CONCRETE CEILING WHERE WATER DAMAGE IS EVIDENT. PAINT, 2 COATS.
16. ROOF ACCESS LADDER, SEE ROOF DEMOLITION AND NEW WORK PLANS.
17. PAINT ALL WALLS AND CEILING, 2 COATS.

| MARK | DESCRIPTION | DATE |
|---|---|---|
| | | |

DESIGNED BY: C.R.
DRAWN BY: M.A.A.
REVIEWED BY: C.R.
SCALE: AS SHOWN
DATE: 05/04/2026
W.O. # AMD–10098–6J
SPEC. #

DIRECTORATE OF PUBLIC WORKS
FORT BLISS, TEXAS

FORT BLISS DPW

BUILDING 2414
ROOF REPLACEMENT
& INTERIOR REPAIRS
DEMO\NEW WORK PLAN – 1ST FLOOR

SHEET NUMBER:
A–103
5 OF 10

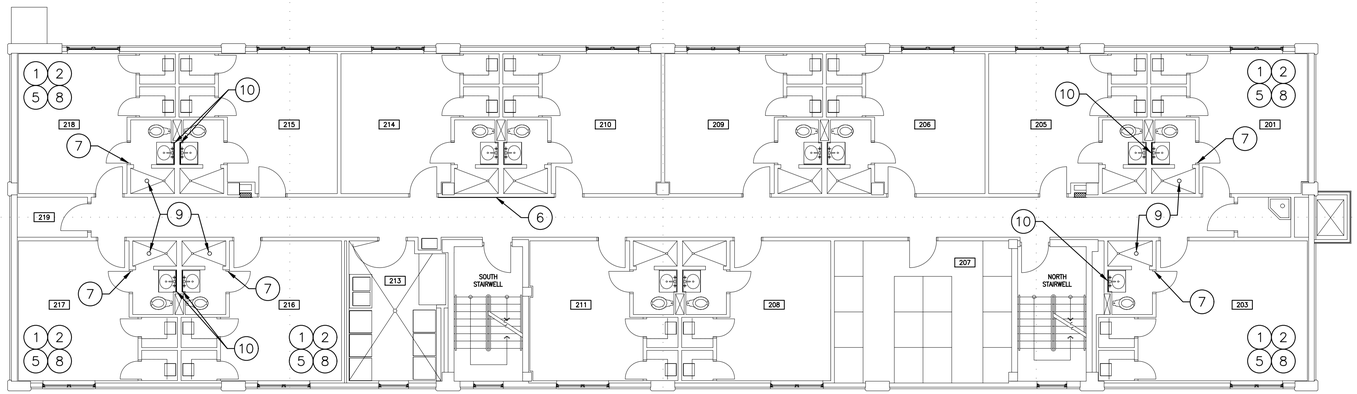


1 DEMOLITION WORK PLAN – 2ND FLOOR
SCALE: 3/32"=1'-0"

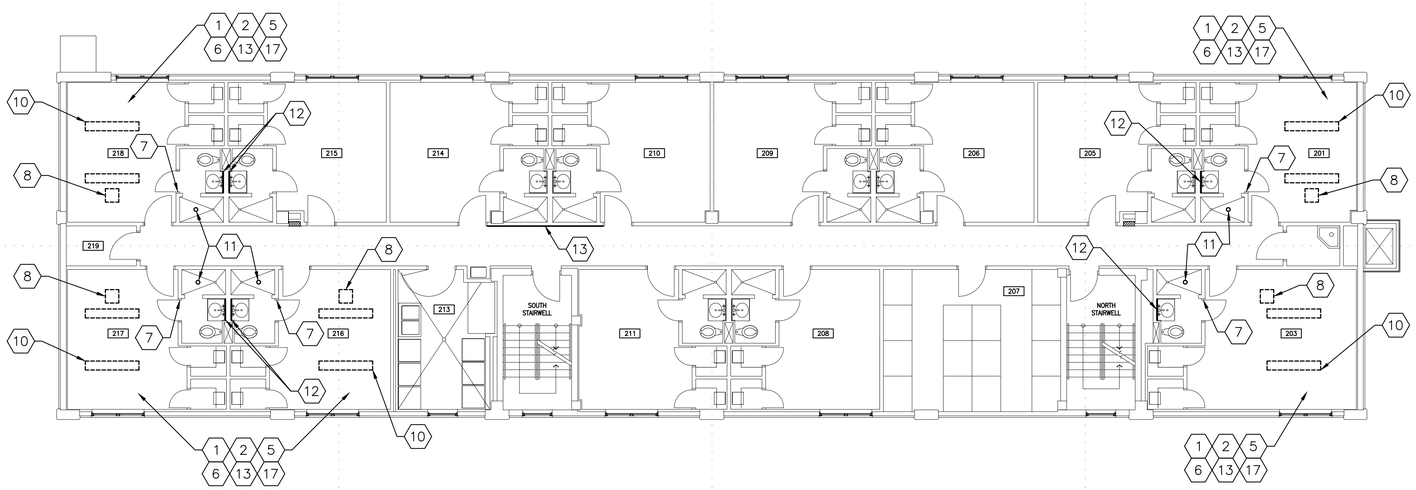


1 NEW WORK PLAN – 2ND FLOOR
SCALE: 3/32"=1'-0"

## DEMOLITION WORK NOTES

NOTE: TEMPORARILY STRAP AND PROTECT ALL EXISTING FIRE DEVICES, AND DIFFUSERS TO ALLOW FOR CONSTRUCTION AND REINSTALL ONCE WORK IN COMPLETE. CONTRACTOR TO FIELD VERIFY EXISTING CONDITIONS AND TAKE PHOTO DOCUMENTATION FOR RECORD PURPOSES PRIOR TO CONSTRUCTION. CONTRACTOR TO COORDINATE FIRE ALARM TEST WITH FORT BLISS FIRE AND DPW PM PRIOR TO CONSTRUCTION AND ONCE CONSTRUCTION IS COMPLETE TO ENSURE ALL DEVICES ARE WORKING PROPERLY. WORK SHALL BE DONE BY A CERTIFIED FIRE ALARM CONTRACTOR.

1. REMOVE EXISTING GYPSUM BOARD CEILING AND ALL ASSOCIATED COMPONENTS AT BEDROOM, CLOSET AND BATHROOM.
2. REMOVE AN ADDITIONAL 125 SF OF GYPSUM BOARD AT WALLS, AREAS TO BE IDENTIFIED AND VALIDATED WITH COR AND CONTRACTOR.
3. REMOVE AN ADDITIONAL 300 SF OF GYPSUM BOARD AT WALLS, AREAS TO BE VALIDATED WITH COR AND CONTRACTOR.
4. REMOVE EXISTING GYPSUM BOARD AND ASSOCIATED WALL BASE AT SOUTH WALL IN ITS ENTIRETY (WET WALL). EXISTING CASEWORK AND SINK TO REMAIN, PROTECT DURING CONSTRUCTION.
5. REMOVE EXISTING VINYL COMPOSITION TILE (VCT) IN BEDROOM AREA AND ALL CLOSETS INCLUDING RESILIENT WALL BASE, AND TRANSITIONS TRIPS, AND PREPARE CONCRETE FOR NEW FLOORING.
6. REMOVE EXISTING RESILIENT WALL BASE.
7. AT BATHROOM HOLLOW METAL DOOR FRAME (BOTH SIDES), CLEAN AND REMOVE CORROSION USING WIRE BRUSHING, SANDING OR CHEMICAL MEANS. SAND TO ENSURE PROPER PAINT ADHESION.
8. REMOVE EXISTING 1–FOOT X 4–FOOT RECESSED MOUNTED LIGHT FIXTURES, EXISTING J–BOX AND ASSOCIATE WIRING TO REMAIN.
9. REMOVE EXISTING RECESSED LIGHT FIXTURE LOCATED OVER THE SHOWER, EXISTING J–BOX AND ASSOCIATE WIRING TO REMAIN.
10. REMOVE EXISTING BATHROOM LIGHT FIXTURE, EXISTING J–BOX AND ASSOCIATE WIRING TO REMAIN.
11. ROOF ACCESS LADDER, SEE ROOF DEMOLITION AND NEW WORK PLANS.

## NEW WORK NOTES

1. NEW DRYWALL SUSPENSION SYSTEM INCLUDING TYPE 'X' GYPSUM BOARD AND MOLD/MOISTURE RESISTANT GYPSUM BOARD AT BATHROOMS, TAPE, BED, AND TEXTURE. PAINT 2 COATS.
2. PROVIDE 125 SF OF NEW GYPSUM BOARD AT WALLS, AREAS TO BE IDENTIFIED AND VALIDATED WITH COR AND CONTRACTOR. PROVIDE NEW TYPE 'X' GYPSUM BOARD AND INCLUDE TAPE, BED, TEXTURE, AND PAINT.
3. PROVIDE 300 SF OF NEW GYPSUM BOARD AT WALLS, AREAS TO BE IDENTIFIED AND VALIDATED WITH COR AND CONTRACTOR. PROVIDE NEW TYPE 'X' GYPSUM BOARD AND INCLUDE TAPE, BED, TEXTURE, AND PAINT.
4. AT ROOM 307 AND SOUTH STAIRWELL, CLEAN AND PAINT EXISTING CONCRETE CEILING WHERE WATER DAMAGE IS EVIDENT.
5. FILL CRACKS, GROOVES, VOIDS, DEPRESSIONS, AND OTHER MINOR IMPERFECTIONS WITH ARDEX (OR APPROVED EQUAL) CEMENT–BASED PATCHING/LEVELING COMPOUNDS AT ALL EXISTING CONCRETE PRIOR TO INSTALLATION OF SCHEDULED FLOORING.
6. NEW VINYL COMPOSITION TILE (VCT) – 12" X 12" X 1/8" INCLUDING ADHESIVE. APPLY A HIGH–QUALITY STAIN–RESISTANT SEALER BELOW TWO COATS OF HIGH–QUALITY COMMERCIAL FLOOR POLISH.
7. CLEAN AND REMOVE CORROSION AT HOLLOW METAL DOOR FRAME (BOTH SIDES), USING WIRE BRUSHING, SANDING OR CHEMICAL MEANS. SAND TO ENSURE PROPER PAINT ADHESION. PROVIDE TWO COATS OF FIELD APPLIED RUST INHIBITIVE PRIMER AND PAINT.
8. PROVIDE 18–INCH X 18–INCH FIRE RATED CEILING ACCESS PANEL. LOCATION TO BE DETERMINED IN FIELD. PAINT TO MATCH CEILING.
9. PROVIDE 12–INCH X 12–INCH WALL ACCESS PANEL. PAINT TO MATCH WALL.
10. PROVIDE NEW LED SURFACE MOUNTED LIGHTS (TWO).
11. NEW RECESSED WET LOCATION LIGHT FIXTURE LOCATED OVER THE SHOWER.
12. NEW WET LOCATION BATHROOM LIGHT FIXTURE.
13. 4–INCH TRADITIONAL RUBBER WALL BASE WITH TOE.
14. AT 'WET' WALL, PROVIDE TYPE 'X' MOLD/MOISTURE RESISTANT GYPSUM BOARD AND NEW WASHING MACHINE WALL BOX WITH CENTER DRAIN. TAPE, BED, TEXTURE, AND PAINT NEW GYPSUM BOARD WALL. PAINT ALL WALLS AND CEILING, 2 COATS.
15. CLEAN AND PAINT EXISTING CONCRETE CEILING WHERE WATER DAMAGE IS EVIDENT. PAINT, 2 COATS.
16. ROOF ACCESS LADDER, SEE ROOF DEMOLITION AND NEW WORK PLANS.
17. PAINT ALL WALLS AND CEILING, 2 COATS.

| MARK | DESCRIPTION | DATE |
|---|---|---|
| | | |

DESIGNED BY: C.R.
DRAWN BY: M.A.A.
REVIEWED BY: C.R.
SCALE: AS SHOWN
DATE: 05/04/2026
W.O. # AMD–10098–6J
SPEC. #

DIRECTORATE OF PUBLIC WORKS
FORT BLISS, TEXAS

FORT BLISS DPW

BUILDING 2414
ROOF REPLACEMENT
& INTERIOR REPAIRS

DEMO\NEW WORK PLAN – 2ND FLOOR

SHEET NUMBER:
A–104

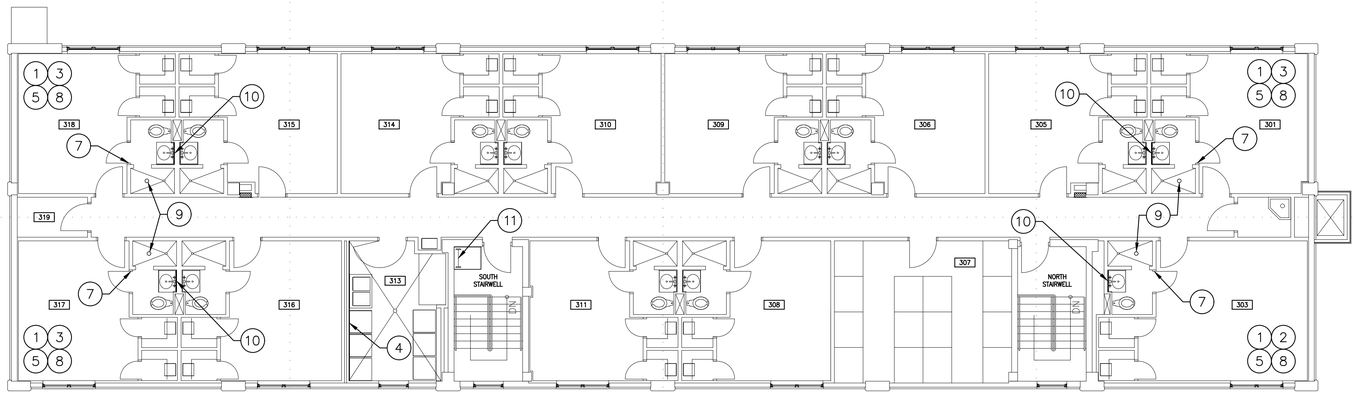


1 DEMOLITION WORK PLAN – 3RD FLOOR
SCALE: 3/32"=1'-0"

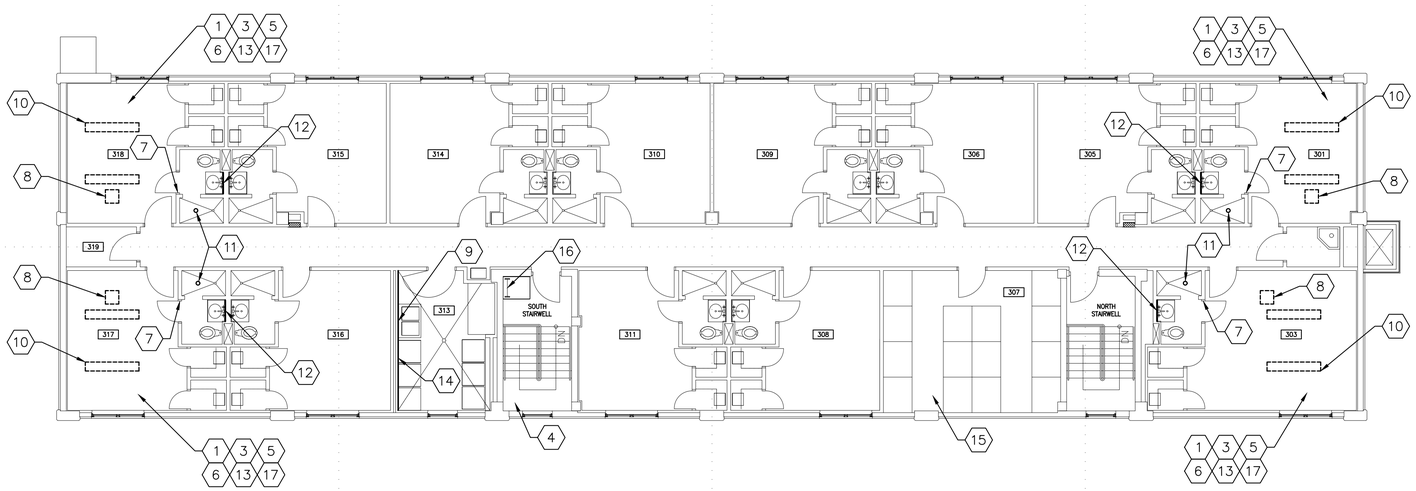


1 NEW WORK PLAN – 3RD FLOOR
SCALE: 3/32"=1'-0"

## DEMOLITION WORK NOTES

NOTE: TEMPORARILY STRAP AND PROTECT ALL EXISTING FIRE DEVICES, AND DIFFUSERS TO ALLOW FOR CONSTRUCTION AND REINSTALL ONCE WORK IN COMPLETE. CONTRACTOR TO FIELD VERIFY EXISTING CONDITIONS AND TAKE PHOTO DOCUMENTATION FOR RECORD PURPOSES PRIOR TO CONSTRUCTION. CONTRACTOR TO COORDINATE FIRE ALARM TEST WITH FORT BLISS FIRE AND DPW PM PRIOR TO CONSTRUCTION AND ONCE CONSTRUCTION IS COMPLETE TO ENSURE ALL DEVICES ARE WORKING PROPERLY. WORK SHALL BE DONE BY A CERTIFIED FIRE ALARM CONTRACTOR.

1. REMOVE EXISTING GYPSUM BOARD CEILING AND ALL ASSOCIATED COMPONENTS AT BEDROOM, CLOSET AND BATHROOM.
2. REMOVE AN ADDITIONAL 125 SF OF GYPSUM BOARD AT WALLS, AREAS TO BE IDENTIFIED AND VALIDATED WITH COR AND CONTRACTOR.
3. REMOVE AN ADDITIONAL 300 SF OF GYPSUM BOARD AT WALLS, AREAS TO BE VALIDATED WITH COR AND CONTRACTOR.
4. REMOVE EXISTING GYPSUM BOARD AND ASSOCIATED WALL BASE AT SOUTH WALL IN ITS ENTIRETY (WET WALL). EXISTING CASEWORK AND SINK TO REMAIN, PROTECT DURING CONSTRUCTION.
5. REMOVE EXISTING VINYL COMPOSITION TILE (VCT) IN BEDROOM AREA AND ALL CLOSETS INCLUDING RESILIENT WALL BASE, AND TRANSITIONS TRIPS, AND PREPARE CONCRETE FOR NEW FLOORING.
6. REMOVE EXISTING RESILIENT WALL BASE.
7. AT BATHROOM HOLLOW METAL DOOR FRAME (BOTH SIDES), CLEAN AND REMOVE CORROSION USING WIRE BRUSHING, SANDING OR CHEMICAL MEANS. SAND TO ENSURE PROPER PAINT ADHESION.
8. REMOVE EXISTING 1–FOOT X 4–FOOT RECESSED MOUNTED LIGHT FIXTURES, EXISTING J–BOX AND ASSOCIATE WIRING TO REMAIN.
9. REMOVE EXISTING RECESSED LIGHT FIXTURE LOCATED OVER THE SHOWER, EXISTING J–BOX AND ASSOCIATE WIRING TO REMAIN.
10. REMOVE EXISTING BATHROOM LIGHT FIXTURE, EXISTING J–BOX AND ASSOCIATE WIRING TO REMAIN.
11. ROOF ACCESS LADDER, SEE ROOF DEMOLITION AND NEW WORK PLANS.

## NEW WORK NOTES

1. NEW DRYWALL SUSPENSION SYSTEM INCLUDING TYPE 'X' GYPSUM BOARD AND MOLD/MOISTURE RESISTANT GYPSUM BOARD AT BATHROOMS, TAPE, BED, AND TEXTURE. PAINT 2 COATS.
2. PROVIDE 125 SF OF NEW GYPSUM BOARD AT WALLS, AREAS TO BE IDENTIFIED AND VALIDATED WITH COR AND CONTRACTOR. PROVIDE NEW TYPE 'X' GYPSUM BOARD AND INCLUDE TAPE, BED, TEXTURE, AND PAINT.
3. PROVIDE 300 SF OF NEW GYPSUM BOARD AT WALLS, AREAS TO BE IDENTIFIED AND VALIDATED WITH COR AND CONTRACTOR. PROVIDE NEW TYPE 'X' GYPSUM BOARD AND INCLUDE TAPE, BED, TEXTURE, AND PAINT.
4. AT ROOM 307 AND SOUTH STAIRWELL, CLEAN AND PAINT EXISTING CONCRETE CEILING WHERE WATER DAMAGE IS EVIDENT.
5. FILL CRACKS, GROOVES, VOIDS, DEPRESSIONS, AND OTHER MINOR IMPERFECTIONS WITH ARDEX (OR APPROVED EQUAL) CEMENT–BASED PATCHING/LEVELING COMPOUNDS AT ALL EXISTING CONCRETE PRIOR TO INSTALLATION OF SCHEDULED FLOORING.
6. NEW VINYL COMPOSITION TILE (VCT) – 12" X 12" X 1/8" INCLUDING ADHESIVE. APPLY A HIGH–QUALITY STAIN–RESISTANT SEALER BELOW TWO COATS OF HIGH–QUALITY COMMERCIAL FLOOR POLISH.
7. CLEAN AND REMOVE CORROSION AT HOLLOW METAL DOOR FRAME (BOTH SIDES), USING WIRE BRUSHING, SANDING OR CHEMICAL MEANS. SAND TO ENSURE PROPER PAINT ADHESION. PROVIDE TWO COATS OF FIELD APPLIED RUST INHIBITIVE PRIMER AND PAINT.
8. PROVIDE 18–INCH X 18–INCH FIRE RATED CEILING ACCESS PANEL. LOCATION TO BE DETERMINED IN FIELD. PAINT TO MATCH CEILING.
9. PROVIDE 12–INCH X 12–INCH WALL ACCESS PANEL. PAINT TO MATCH WALL.
10. PROVIDE NEW LED SURFACE MOUNTED LIGHTS (TWO).
11. NEW RECESSED WET LOCATION LIGHT FIXTURE LOCATED OVER THE SHOWER.
12. NEW WET LOCATION BATHROOM LIGHT FIXTURE.
13. 4–INCH TRADITIONAL RUBBER WALL BASE WITH TOE.
14. AT 'WET' WALL, PROVIDE TYPE 'X' MOLD/MOISTURE RESISTANT GYPSUM BOARD AND NEW WASHING MACHINE WALL BOX WITH CENTER DRAIN. TAPE, BED, TEXTURE, AND PAINT NEW GYPSUM BOARD WALL. PAINT ALL WALLS AND CEILING, 2 COATS.
15. CLEAN AND PAINT EXISTING CONCRETE CEILING WHERE WATER DAMAGE IS EVIDENT. PAINT, 2 COATS.
16. ROOF ACCESS LADDER, SEE ROOF DEMOLITION AND NEW WORK PLANS.
17. PAINT ALL WALLS AND CEILING, 2 COATS.

| MARK | DESCRIPTION | DATE |
|---|---|---|
| | | |

DESIGNED BY: C.R.
DRAWN BY: M.A.A.
REVIEWED BY: C.R.
SCALE: AS SHOWN
DATE: 05/04/2026
W.O. # AMD–10098–6J
SPEC. #

DIRECTORATE OF PUBLIC WORKS
FORT BLISS, TEXAS

FORT BLISS DPW

BUILDING 2414
ROOF REPLACEMENT
& INTERIOR REPAIRS

DEMO\NEW WORK PLAN – 3RD FLOOR

SHEET NUMBER:
A–105

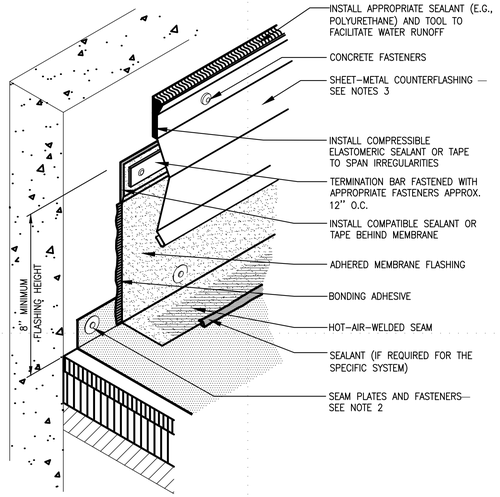


NOTES:

1. THIS DETAIL DOES NOT ALLOW FOR DIFFERENTIAL MOVEMENT BETWEEN THE DECK AND WALL.
2. REFER TO THE INTRODUCTION OF THE CONSTRUCTION DETAILS CHAPTER FOR ALTERNATIVE BASE SECUREMENT OPTIONS.
3. REFER TO THE ARCHITECTURAL METAL FLASHING SECTION OF THE NRCA ROOFING MANUAL: ARCHITECTURAL METAL FLASHING, CONDENSATION AND AIR LEAKAGE CONTROL, AND REROOFING FOR DESIGN, JOINERY AND SECUREMENT OPTIONS FOR COUNTERFLASHINGS.

## 1 BASE FLASHING WITH SURFACE–MOUNTED COUNTERFLASHING AT CONCRETE WALL
N.T.S.

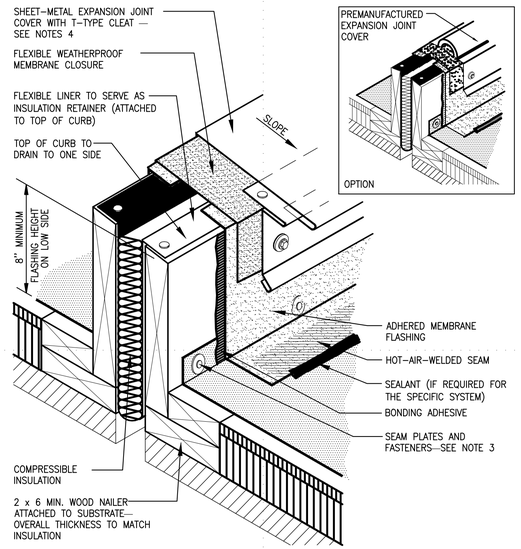


NOTES:

1. THIS DETAIL ALLOWS FOR BUILDING MOVEMENT IN MULTIPLE DIRECTIONS.
2. FLASHING REQUIREMENTS ARE TYPICAL FOR BOTH SIDES OF THE EXPANSION JOINT.
3. REFER TO THE INTRODUCTION OF THE CONSTRUCTION DETAILS CHAPTER FOR ALTERNATIVE BASE SECUREMENT OPTIONS.
4. REFER TO THE ARCHITECTURAL METAL FLASHING SECTION OF THE NRCA ROOFING MANUAL: ARCHITECTURAL METAL FLASHING, CONDENSATION AND AIR LEAKAGE CONTROL, AND REROOFING FOR DESIGN, JOINERY AND SECUREMENT OPTIONS FOR EXPANSION JOINT COVERS.

## 2 BASE FLASHING AT EXPANSION JOINT WITH METAL COVER
N.T.S.

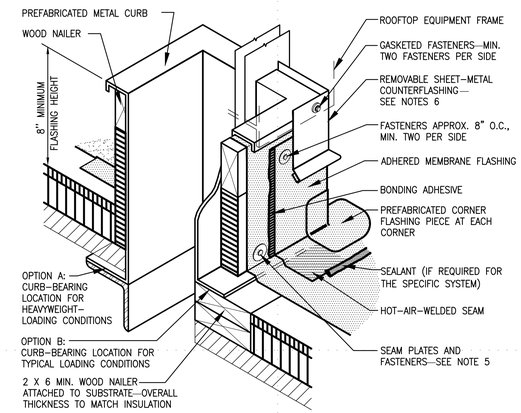


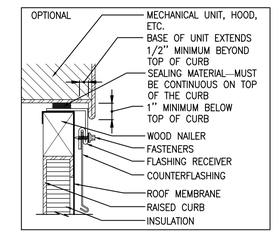


NOTES:

1. THE CURBS, TOP WOOD NAILER AND SEAL STRIP ARE TO BE SUPPLIED BY THE CURB MANUFACTURER.
2. WHEN POSSIBLE, THE MECHANICAL UNITS SHOULD NOT BE SET UNTIL THE ROOF MEMBRANE AND FLASHING HAVE BEEN INSTALLED.
3. WHERE THE SKYLIGHT, SCUTTLE OR SMOKE VENT FRAME OVERLAPS THE BASE FLASHING AT LEAST 3 INCHES, THE REMOVABLE SHEET–METAL COUNTERFLASHING IS NOT REQUIRED.
4. NRCA RECOMMENDS DESIGNERS CONSIDER PERMANENT INTERNAL OR EXTERNAL FALL–PROTECTION DEVICES AT ALL SKYLIGHTS.
5. REFER TO THE INTRODUCTION OF THE CONSTRUCTION DETAILS CHAPTER FOR ALTERNATIVE BASE SECUREMENT OPTIONS.
6. REFER TO THE ARCHITECTURAL METAL FLASHING SECTION OF THE NRCA ROOFING MANUAL: ARCHITECTURAL METAL FLASHING, CONDENSATION AND AIR LEAKAGE CONTROL, AND REROOFING FOR DESIGN, JOINERY AND SECUREMENT OPTIONS FOR COUNTERFLASHINGS.

## 3 BASE FLASHING AT PREFABRICATED METAL CURB
N.T.S.

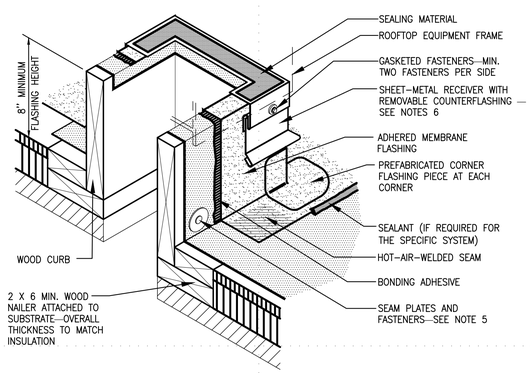


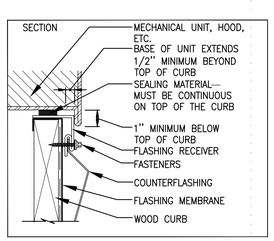


NOTES:

1. THE CURBS, TOP WOOD NAILER AND SEAL STRIP ARE TO BE SUPPLIED BY THE CURB MANUFACTURER.
2. WHEN POSSIBLE, THE MECHANICAL UNITS SHOULD NOT BE SET UNTIL THE ROOF MEMBRANE AND FLASHING HAVE BEEN INSTALLED.
3. WHERE THE SKYLIGHT, SCUTTLE OR SMOKE VENT FRAME OVERLAPS THE BASE FLASHING AT LEAST 3 INCHES, THE REMOVABLE SHEET–METAL COUNTERFLASHING IS NOT REQUIRED.
4. NRCA RECOMMENDS DESIGNERS CONSIDER PERMANENT INTERNAL OR EXTERNAL FALL–PROTECTION DEVICES AT ALL SKYLIGHTS.
5. REFER TO THE INTRODUCTION OF THE CONSTRUCTION DETAILS CHAPTER FOR ALTERNATIVE BASE SECUREMENT OPTIONS.
6. REFER TO THE ARCHITECTURAL METAL FLASHING SECTION OF THE NRCA ROOFING MANUAL: ARCHITECTURAL METAL FLASHING, CONDENSATION AND AIR LEAKAGE CONTROL, AND REROOFING FOR DESIGN, JOINERY AND SECUREMENT OPTIONS FOR COUNTERFLASHINGS.

## 4 BASE FLASHING AT WOOD CURB
N.T.S.

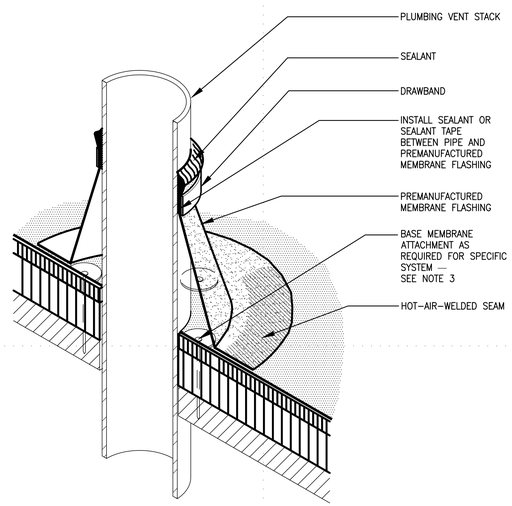


NOTES:

1. VENT STACKS AND OTHER PIPES SHOULD HAVE A MINIMUM OF 12 INCHES OF CLEARANCE ON ALL SIDES FROM WALLS, CURBS AND OTHER PROJECTIONS TO FACILITATE PROPER FLASHING. SEE THE INTRODUCTION TO THE CONSTRUCTION DETAILS FOR ADDITIONAL INFORMATION.
2. NRCA RECOMMENDS FLASHINGS BE 8 INCHES HIGH; HOWEVER, NRCA IS AWARE PREMANUFACTURED BOOT FLASHINGS GENERALLY WILL NOT MEET THE HEIGHT REQUIREMENT.
3. REFER TO MANUFACTURERS' SPECIFICATIONS FOR SPECIFIC REQUIREMENTS FOR BASE MEMBRANE ATTACHMENT AND PLACEMENT. MECHANICALLY ATTACHED SYSTEMS GENERALLY HAVE SPECIFIC ATTACHMENT REQUIREMENTS FOR PENETRATION LOCATIONS.

## 5 PLUMBING VENT (PREMANUFACTURED BOOT)
N.T.S.

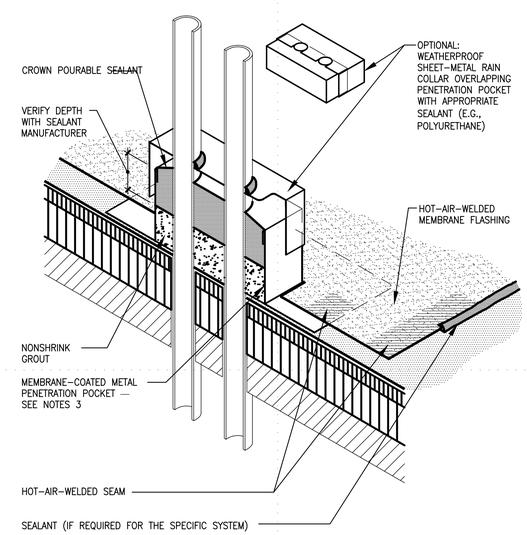


NOTES:

1. PENETRATION POCKETS ARE NOT THE PREFERRED FLASHING METHOD AT PENETRATIONS BECAUSE THEY MAY BE A MAINTENANCE PROBLEM.
2. REFER TO MANUFACTURERS' SPECIFICATIONS FOR SPECIFIC REQUIREMENTS FOR BASE MEMBRANE ATTACHMENT AND PLACEMENT. MECHANICALLY ATTACHED SYSTEMS GENERALLY HAVE SPECIFIC ATTACHMENT REQUIREMENTS AT PENETRATION LOCATIONS.
3. REFER TO THE ARCHITECTURAL METAL FLASHING SECTION OF THE NRCA ROOFING MANUAL: ARCHITECTURAL METAL FLASHING, CONDENSATION AND AIR LEAKAGE CONTROL, AND REROOFING FOR DESIGN, JOINERY AND SECUREMENT OPTIONS FOR PENETRATION POCKETS.

## 6 MEMBRANE–COATED METAL PENETRATION POCKET–DOUBLE PENETRATION
N.T.S.

| MARK | DESCRIPTION | DATE |
|---|---|---|
| | | |

DESIGNED BY: C.R. | DATE: 05/04/2026
DRAWN BY: M.A.A. | W.O. # AMD–10098–6J
REVIEWED BY: C.R. | SPEC. #
SCALE: AS SHOWN

FORT BLISS DPW

DIRECTORATE OF PUBLIC WORKS
FORT BLISS, TEXAS

BUILDING 2414
ROOF REPLACEMENT
& INTERIOR REPAIRS

DETAILS

SHEET NUMBER:
A–106

8 OF 10

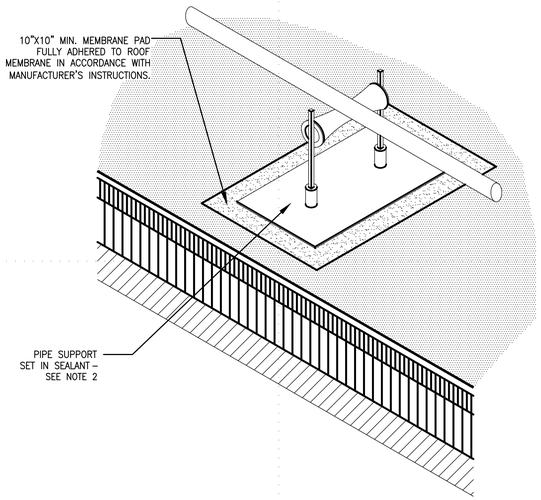


NOTES:

1. THIS DETAIL IS DESIGNED TO ELIMINATE ROOF DAMAGE DUE TO EXPANSION AND CONTRACTION OF PIPES.
2. PIPE SUPPORT PROFILES VARY. REFER TO THE MANUFACTURER FOR LOAD CAPACITY. SPACE SUPPORTS EVERY 6'–0" MIN. AND ALL CHANGES IN DIRECTION ON EACH SIDE OF TURN.

## 7 PIPE SUPPORT
N.T.S.

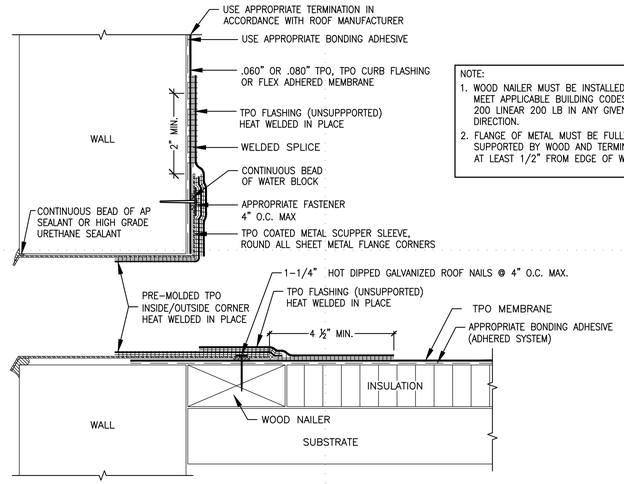


NOTE:

1. WOOD NAILER MUST BE INSTALLED TO MEET APPLICABLE BUILDING CODES OR 200 LINEAR 200 LB IN ANY GIVEN DIRECTION.
2. FLANGE OF METAL MUST BE FULLY SUPPORTED BY WOOD AND TERMINATED AT LEAST 1/2" FROM EDGE OF WOOD.

## 8 THROUGH–WALL SCUPPER
N.T.S.

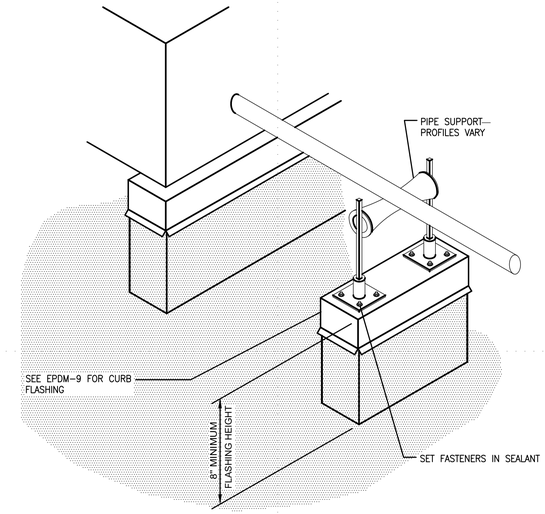


NOTES:

1. THIS DETAIL IS DESIGNED TO ELIMINATE ROOF DAMAGE DUE TO EXPANSION AND CONTRACTION OF PIPES. PIPE SUPPORT PROFILES VARY.
2. REFER TO THE ARCHITECTURAL METAL FLASHING SECTION OF THE NRCA ROOFING MANUAL: ARCHITECTURAL METAL FLASHING, CONDENSATION AND AIR LEAKAGE CONTROL, AND REROOFING FOR DESIGN, JOINERY AND SECUREMENT OPTIONS FOR SHEET–METAL COVERS.

## 9 PIPE SUPPORT CURB AT PIPING ON MECH. EQUIPMENT
N.T.S.

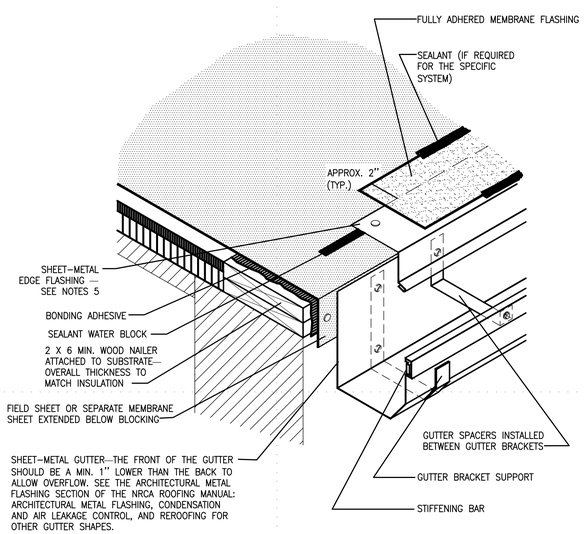


NOTES:

1. IN CLIMATES WHERE THE WINTER TEMPERATURE REMAINS BELOW FREEZING FOR EXTENDED PERIODS OF TIME, NRCA SUGGESTS INTERIOR DRAINS TO DRAIN THE ROOF.
2. GUTTER BRACKETS ARE RECOMMENDED TO BE AT LEAST ONE GAUGE HEAVIER THAN GUTTER STOCK.
3. ON BALLASTED SYSTEMS, A DRAINAGE BAR TO RETAIN BALLAST IS REQUIRED.
4. REFER TO MANUFACTURERS' SPECIFICATIONS FOR SPECIFIC REQUIREMENTS FOR BASE MEMBRANE ATTACHMENT AND PLACEMENT. MECHANICALLY ATTACHED SYSTEMS GENERALLY REQUIRE SPECIFIC ATTACHMENT REQUIREMENTS FOR PERIMETER LOCATIONS.
5. REFER TO THE ARCHITECTURAL METAL FLASHING SECTION OF THE NRCA ROOFING MANUAL: ARCHITECTURAL METAL FLASHING, CONDENSATION AND AIR LEAKAGE CONTROL, AND REROOFING FOR DESIGN, JOINERY AND SECUREMENT OPTIONS FOR PERIMETER EDGE METAL.

## 10 GUTTER WITH PERIMETER EDGE METAL
N.T.S.

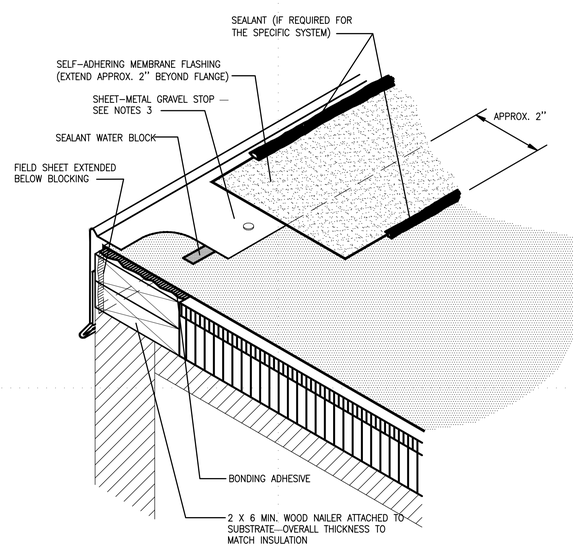


NOTES:

1. REFER TO THE INTRODUCTION OF THE CONSTRUCTION DETAILS CHAPTER FOR ALTERNATIVE BASE SECUREMENT OPTIONS.
2. REFER TO MANUFACTURERS' SPECIFICATIONS FOR SPECIFIC REQUIREMENTS FOR BASE MEMBRANE ATTACHMENT AND PLACEMENT. MECHANICALLY ATTACHED SYSTEMS GENERALLY HAVE SPECIFIC ATTACHMENT REQUIREMENTS FOR PERIMETER LOCATIONS.
3. REFER TO THE ARCHITECTURAL METAL FLASHING SECTION OF THE NRCA ROOFING MANUAL: ARCHITECTURAL METAL FLASHING, CONDENSATION AND AIR LEAKAGE CONTROL, AND REROOFING FOR DESIGN, JOINERY AND SECUREMENT OPTIONS FOR GRAVEL STOPS.

## 11 EMBEDED EDGE METAL FLASHING (GRAVEL STOP)
N.T.S.

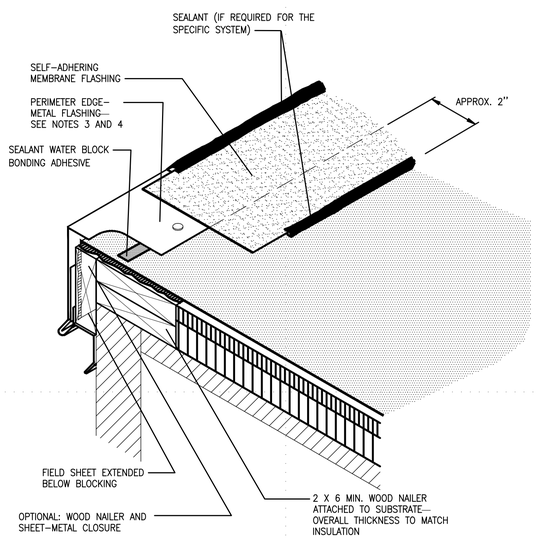


NOTES:

1. REFER TO THE INTRODUCTION OF THE CONSTRUCTION DETAILS CHAPTER FOR ALTERNATIVE BASE SECUREMENT OPTIONS.
2. REFER TO MANUFACTURERS' SPECIFICATIONS FOR SPECIFIC REQUIREMENTS FOR BASE MEMBRANE ATTACHMENT AND PLACEMENT. MECHANICALLY ATTACHED SYSTEMS GENERALLY HAVE SPECIFIC ATTACHMENT REQUIREMENTS FOR PERIMETER LOCATIONS.
3. REFER TO THE ARCHITECTURAL METAL FLASHING SECTION OF THE NRCA ROOFING MANUAL: ARCHITECTURAL METAL FLASHING, CONDENSATION AND AIR LEAKAGE CONTROL, AND REROOFING FOR DESIGN, JOINERY AND SECUREMENT OPTIONS FOR PERIMETER EDGE METAL.

## 12 DRAINING PERIMETER EDGE METAL
N.T.S.

| MARK | DESCRIPTION | DATE |
|---|---|---|
| | | |

DESIGNED BY: C.R. | DATE: 05/04/2026
DRAWN BY: M.A.A. | W.O. # AMD–10098–6J
REVIEWED BY: C.R. | SPEC. #
SCALE: AS SHOWN

FORT BLISS DPW

DIRECTORATE OF PUBLIC WORKS
FORT BLISS, TEXAS

BUILDING 2414
ROOF REPLACEMENT
& INTERIOR REPAIRS
DETAILS (CONTINUED)

SHEET NUMBER:
A–107

9 OF 10

NOTES:

1. THE SIGNS ARE TO BE ERECTED AT A LOCATION DESIGNATED BY THE COR AND SHALL CONFORM TO THE SIZE, FORMAT, AND TYPOGRAPHIC STANDARDS.
2. THE SIGN PANELS ARE TO BE FABRICATED FROM .75" HIGH DENSITY OVERLAY PLYWOOD.
3. SIGN GRAPHICS TO BE PREPARED ON A WHITE NON-REFLECTIVE VINYL FILM WITH POSITIONABLE ADHESIVE BACKING.
4. DRILL AND INSERT SIX (6) .375" T-NUTS FROM THE FRONT FACE OF THE SIGN PANEL. FLANGE OF T-NUT TO BE BLUSH WITH SIGN FACE.
5. SIGN UPRIGHT TO BE STRUCTURAL GRADE 4"X4" TREATED DOUGLAS FIR OR SOUTHERN YELLOW PINE. NO. 1 OR BETTER. DRILL SIX (6) .375" MOUNTING HOLES IN UPRIGHTS TO ALIGN WITH T-NUTS IN SIGN PANEL.COUNTERSINK (.5") BACK OF HOLE TO ACCEPT SOCKET HEAD CAP SCREW (4" X .375")
6. MINIMUM DISTANCE BETWEEN BOTTOM OF SIGN AND GROUND SHALL BE 4'.

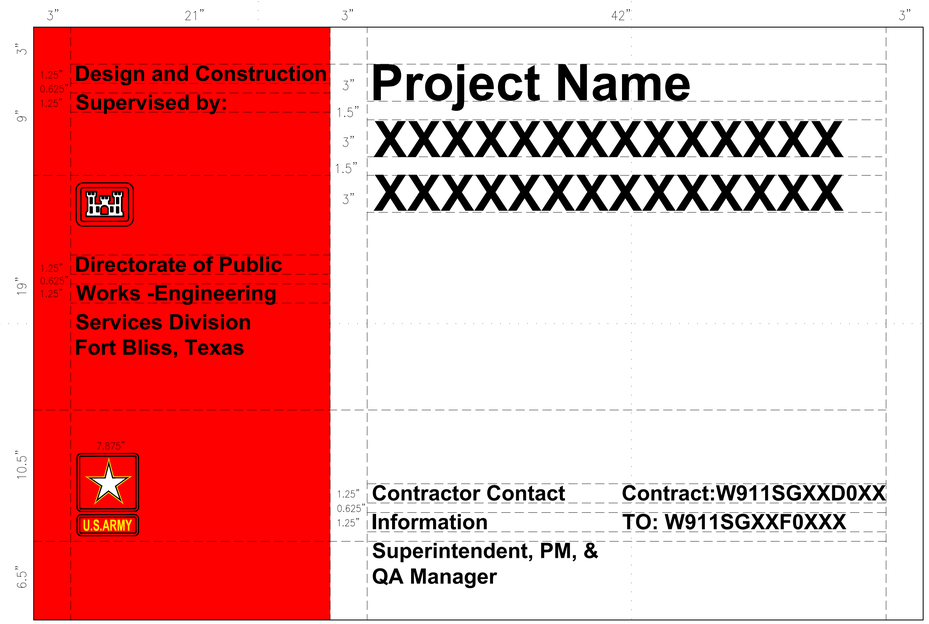


PROJECT INFORMATION SIGNAGE DETAIL

NOT TO SCALE

| MARK | DESCRIPTION | DATE |
|---|---|---|
| | | |

DESIGNED BY: C.R. | DATE: 05/04/2026
DRAWN BY: M.A.A. | W.O. # AMD-10098-6J
REVIEWED BY: C.R. | SPEC. #
SCALE: AS SHOWN

DIRECTORATE OF PUBLIC WORKS
FORT BLISS, TEXAS

FORT BLISS DPW

BUILDING 2414
ROOF REPLACEMENT
& INTERIOR REPAIRS

PROJECT INFORMATION SIGNAGE DETAIL

SHEET NUMBER:

G-100

10 OF 10