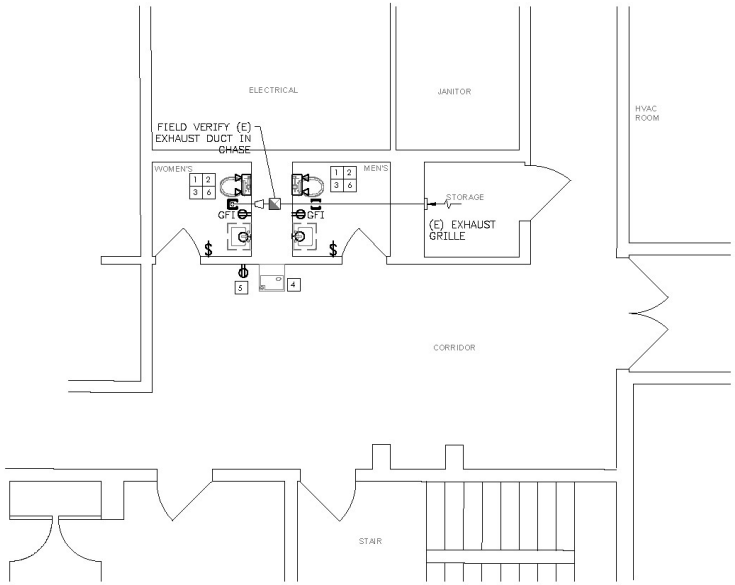

1 RESTROOMS DEMOLITION WORK PLAN
MEP1 SCALE: 1/4"=1'-0"

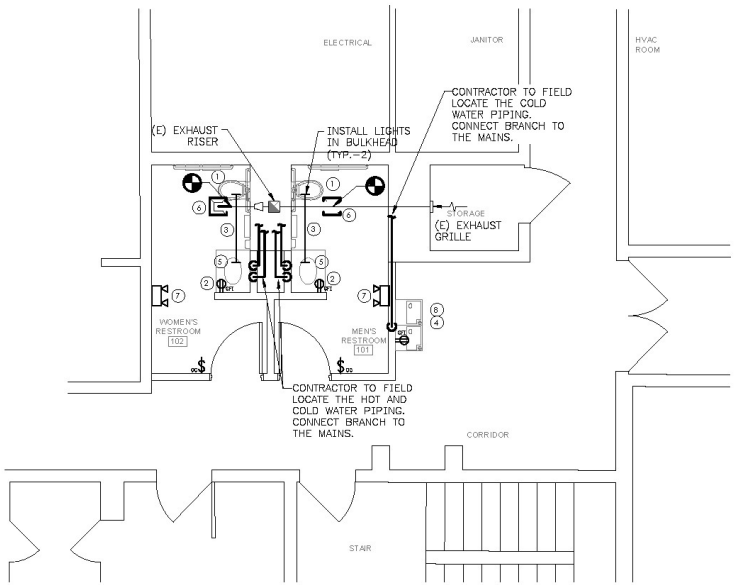

2 RESTROOMS NEW WORK PLAN
MEP1 SCALE: 1/4"=1'-0"

DEMOLITION KEY NOTES:

1. DEMO TOILETS, SINKS, AND FAUCETS. MODIFY (E) DOMESTIC WATER, SANITARY, AND VENT PIPING AS REQUIRED FOR NEW FIXTURE INSTALLATION.
2. DEMO RECEPTACLE. MODIFY WIRING AS REQUIRED FOR NEW LAYOUT. EXISTING CIRCUITS TO BE REUSED IN NEW LAYOUT.
3. DEMO LIGHTS, EMERGENCY LIGHTS, AND SWITCHES. MODIFY WIRING AS REQUIRED FOR NEW LAYOUT. EXISTING CIRCUITS TO BE REUSED IN NEW LAYOUT.
4. DEMO DRINKING FOUNTAIN. PREP PIPING AS NEEDED FOR EXTENSION TO NEW DRINKING FOUNTAIN LOCATION. DEMO AND REMOVE ASSOCIATED RECEPTACLE (FIELD VERIFY) AND EXTEND TO NEW LOCATION.
5. DEMO AND REMOVE RECEPTACLE BACK TO SOURCE.
6. DEMO AND REMOVE EXHAUST GRILLE AND BRANCH DUCTWORK. INFILL/PATCH DUCT PENETRATIONS MADE EMPTY DUE TO DEMO.

NEW WORK KEY NOTES:

1. INSTALL NEW WATER CLOSET (WC-1). CONNECT WC-1 TO EXISTING PIPING. MODIFY EXISTING PIPING AS REQUIRED.
2. CONNECT NEW GFCI RECEPTACLE TO EXISTING CIRCUIT. EXTEND WIRING AS NEEDED TO NEW LOCATION.
3. CONNECT NEW LIGHTING AND SWITCHES TO EXISTING LIGHTING CIRCUIT. EXTEND WIRING AS NEEDED.
4. INSTALL NEW DRINKING FOUNTAIN (DF-1). EXTEND 3/4" DOMESTIC WATER, 2" SANITARY, AND 1 1/2" VENT FROM EXISTING LOCATION AS NEEDED. PROVIDE NEW SHUT OFF VALVES IN BRANCH PIPING, AND DI-ELECTRIC FITTINGS.
5. INSTALL NEW LAVATORY (LAV-1). EXTEND EXISTING DOMESTIC WATER, SANITARY, AND VENT PIPE SIZES FROM EXISTING LOCATION AS NEEDED. PROVIDE NEW SHUT OFF VALVES IN BRANCH PIPING.
6. CLEAN ALL EXHAUST DUCTWORK. COORDINATE WITH OWNER FOR EXTENT OF CLEANING. PROVIDE NEW 12x12 EXHAUST GRILLE WITH PANEL BORDER FOR 24x24 FOR LAY IN CEILING APPLICATION. EXTEND 6x6 DUCT AS REQUIRED FROM EXISTING DUCT TO CEILING WITH NEW VOLUME DAMPER. BALANCE TO 50 CFM FOR CONTINUOUSLY RUNNING FAN.
7. NEW EMERGENCY LIGHT WITH BATTERY PACK AND TWO HEADS. CONNECT TO EXISTING LIGHTING CIRCUIT.
8. NEW GFCI RECEPTACLE FOR WATER COOLER. LOCATE IN ACCORDANCE WITH MANUFACTURES INSTRUCTIONS AND CODES.

GENERAL NOTES:

1. CONTRACTOR TO FIELD ROUTE ALL NEW PLUMBING PIPING AND DUCTWORK.
2. DEMOLISH ALL EXISTING ELECTRICAL EQUIPMENT. REUSE EXISTING CIRCUITS. PROVIDE NEW BRANCH CIRCUITS WHERE NECESSARY.

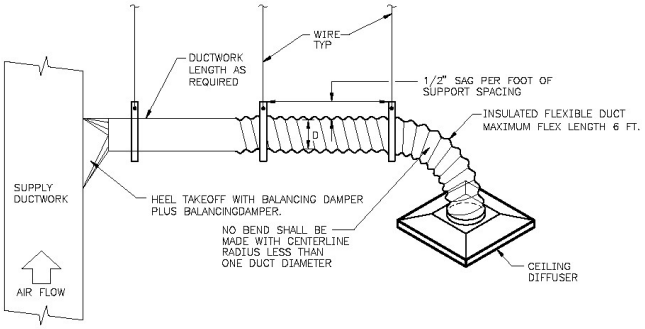

3 FLEXIBLE DUCTWORK DETAIL
MEP1 SCALE: NONE

PLUMBING FIXTURE SCHEDULE

TAG	BASIS OF DESIGN	FLUSH VALVE OR FAUCET	REMARKS
WC 1	AMERICAN STANDARD MODEL 3043.001 ADA COMPLIANT	SLOAN MODEL G28111-1.6 ADA COMPLIANT	PROVIDE WHITE FINISH, AMERICAN STANDARD MODEL 5901.100 ELONGATED OPEN FRONT SEAT, FLOOR MOUNTED WITH NEW WAX RING, AUTOMATIC BATTERY OPERATED FLUSH VALVE RATED FOR 1.6 GPF.
LAV 1	PROFLO PROVIDE ADA COMPLIANT	PROFLO MODEL PFXB3045 ADA COMPLIANT	PROVIDE STAINLESS STEEL FINISH, UNDERMOUNT STYLE, PROFLO STRAINER MODEL PF14315S PROVIDE PROFLO P-TRAP WITH CLEANOUT MODEL PFPTB201. PROVIDE STAINLESS STEEL BRAIDED FLEXIBLE SUPPLY LINE. COORDINATE MOUNTING HEIGHT WITH ARCHITECTURAL PLANS.
DF 1	ELKAY MODEL EZSTL8FC ADA COMPLIANT	–	PROVIDE NSF/ANSI 61 & 373 RATED LEAD FREE, LIGHT GRAY GRANITE FINISH, FILTER, 115V/1ø/60hz POWER, 8 GPH CHILLING, 4 FULL LOAD AMPS, 370 WATTS, UL LISTED, P-TRAP, AND ELECTRONIC ACTIVATION.

FWA JOB NUMBER 2191153.00

WARNING: Distribution authori Govt. agencies & their U.S. cont Reason: Administrative/Operati 2 December 1996; Other reques this document shall be referred Cdr, USAG, ATTN: AMSS APG, MD 21005-5001. DESTRUCTION NOTICE: Destroy by any method that will disclosure of contents or recons of the document.

DEDC LLC
ENGINEERING | DESIGN | CONSULTING
www.dedc-eng.com
315 South Chapel St.
Newark, DE 19711
Phone: (302)738-7172
Duane Morris Plaza
30 S. 17th Street, Suite 830
Philadelphia, PA 19103
Phone: (267) 804-7288
DEDC Project # 19P368

BERING STRAITS Technical Services
A Bering Straits Company

FREDERICK WARD ASSOCIATES
P.O. Box 727, 8 South Main Street Bel Air Maryland 21014
ARCHITECTS
ENGINEERS
PLANNERS
SURVEYORS
410-838-7900
www.frederickward.com

"PROFESSIONAL CERTIFICATION. I HEREBY CERTIFY THAT THESE DOCUMENTS WERE PREPARED OR APPROVED BY JOHN R. FARINA, AND THAT I AM A DULY LICENSED PROFESSIONAL ENGINEER UNDER THE LAWS OF THE STATE OF MARYLAND, LICENSE NO. 30332, EXPIRATION DATE: 9/23/20."

19P368 STATE OF MARYLAND JOHN FARINA 30332 PROFESSIONAL ENGINEER
DEDC, LLC
JOHN R. FARINA, PE
MD# 30332
6/17/20

ORIGINAL SIZE
0 1" 2" 3" 4"
1/8 3/8 1/2 1/10

NO.	DATE	REVISION DESCRIPTION

DIO — DIRECTORATE OF INSTALLATION OPERATIONS
ENGINEERING & CONSTRUCTION DIVISION
ABERDEEN PROVING GROUND, MARYLAND

DESIGNED DEDC
DRAWN DEDC
CHECKED DEDC
DATE 06/17/2020
SPEC. NO.
BLDG. NO. 4504
SCALE AS NOTED

TOILET ROOM RENOVATIONS FOR APG BUILDING 4504
ABERDEEN PROVING GROUND, ABERDEEN MARYLAND

RESTROOMS DEMOLITION AND NEW WORK PLAN

MEP
DRAWING
SHEET 4 OF

AS-
MF#