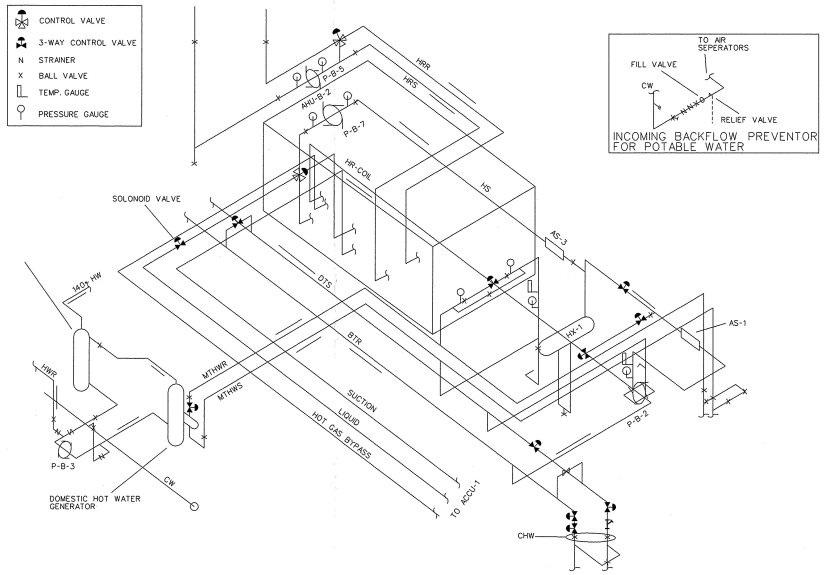

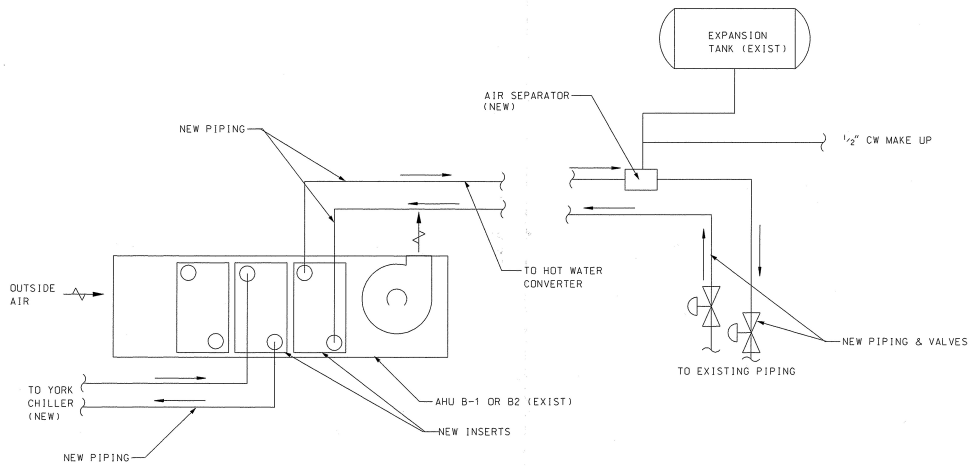

PROPOSED ADDITION TO EXIST SYSTEMS
SCALE-NONE

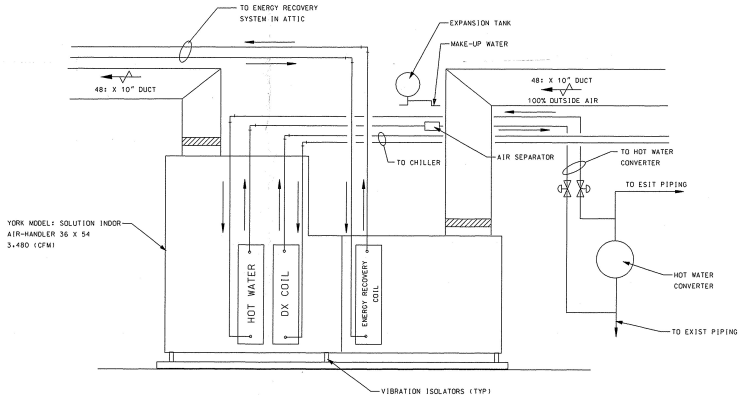

SYSTEM LAYOUT BLDG. 4501

SCALE-NONE

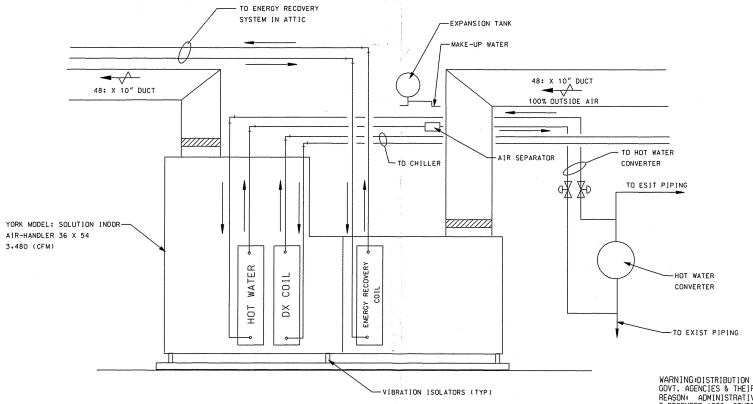

SYSTEM LAYOUT BLDG. 4504

SCALE-NONE

WARNING:DISTRIBUTION AUTHORIZED TO U.S. GOVT. AGENCIES & THEIR U.S. CONTRACTORS REASON: ADMINISTRATIVE/OPERATIONAL USE; 2 DECEMBER 1996; OTHER REQUESTS FOR THIS DOCUMENT SHALL BE REFERRED TO: COR, USAG,ATTN: AMSSB-GIO-E APG, MD 21005-5001.
DESTRUCTION NOTICE:
DESTROY BY ANY METHOD THAT WILL PREVENT DISCLOSURE OF CONTENTS OR RECONSTRUCTION OF THE DOCUMENT.

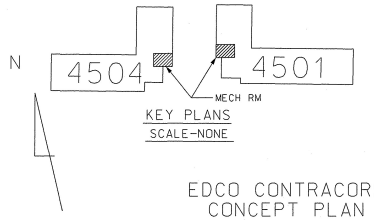

KEY PLANS
SCALE-NONE

EDCO CONTRACORS
CONCEPT PLAN
NOT-FOR-CONSTRUCTION

NO.	DATE	REVISION DESCRIPTION	BY
1	5/23/07	AS-BUILTS	CDF

DIO
DIRECTORATE OF INSTALLATION OPERATIONS
ENGINEERING & CONSTRUCTION DIVISION
ABERDEEN PROVING GROUND, MARYLAND

DESIGNED
DRAWN
CHECKED
DATE 30 MAY 06
SCALE AS-NOTED
P.O. NO.
W.R. NO. IND 86TM SJ

BUILDING 4501 & 4504
MECHANICAL UPGRADE
ABERDEEN AREA
ABERDEEN PROVING GROUND, MD

PROPOSED MECHANICAL PLAN

M-1
DRAWING NO.

SHEET 1 OF 1

AMSSB-GIO-E FORM REV 01 JUL 02

..\Bldg 4504\4504 ASBUILTS.dgn 3/25/2008 2:59:23 PM

MF#054886