ENLISTED BARRACKS PHASE IV

TYPICAL F.C.U. WITH 2 TWO-WAY CONTROL VALVE

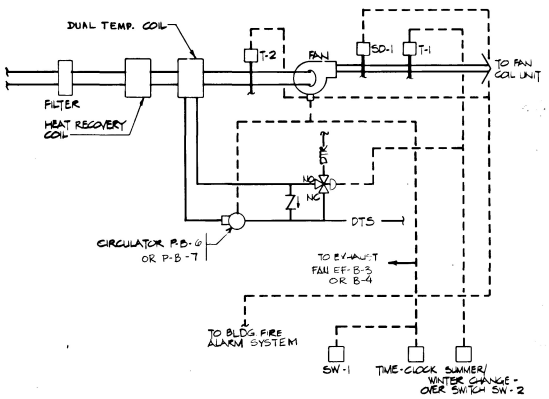

SEQUENCE OF OPERATION

GENERAL - THE SYSTEM SHALL BE PLACED IN OPERATION BY THE HAND-OFF-AUTOMATIC SWITCH SW-1 LOCATED WITHIN THE TEMPERATURE CONTROL PANEL AND SHALL RUN CONTINUOUSLY THROUGH A PRESET TIME CLOCK PROGRAM. PUMP P-B AND EXHAUST FAN SHALL BE INTERLOCKED TO START AND STOP WITH AIR HANDLING UNIT AHU-B-1. FAN STATUS, FAILURE, FILTER AND SMOKE ALARMS PUMP STATUS LIGHT SHALL BE LOCATED IN THE LOCAL TEMPERATURE CONTROL PANEL, IN THE MECH. RM. WHEN UNIT IS ACTIVATED, OUTSIDE AIR DAMPER SHALL OPEN.

COOLING CYCLE - SWITCH SW-2 SHALL BE IN THE SUMMER POSITION. WHEN THE DISCHARGE TEMPERATURE RISES ABOVE THE 66°F SET POINT OF THE T-1, THE CONTROL VALVE V-1 SHALL MODULATE TO ALLOW CHILLED WATER FLOW THROUGH THE COOLING COIL. WHEN THE TEMPERATURE OF T-1 DROPS BELOW THE SET POINT, THE CONTROL VALVE SHALL CLOSE.

HEATING CYCLE - SWITCH SW-2 SHALL BE IN THE WINTER POSITION. THE CONTROL VALVE V-1 SHALL MODULATE WATER FLOW THROUGH THE COIL TO MAINTAIN THE DISCHARGE TEMPERATURE AT 68°F. THE LOW LIMIT THERMOSTAT T-2 SHALL DEENERGIZE THE FAN WHEN COIL LEAVING AIR TEMPERATURE REACHES THE 35°F LOW LIMIT SET POINT.

UNOCCUPIED CYCLE - SWITCH SW-1 SHALL BE IN THE OFF POSITION. THE SYSTEM SHALL BE DEENERGIZED.

SMOKE DETECTION - SMOKE DETECTOR SD-1 LOCATED AT THE SUPPLY AIR FAN DISCHARGE SHALL AUTOMATICALLY SHUT DOWN THE UNIT WHEN SMOKE IS DETECTED. ACTUATION OF SMOKE DETECTOR SHALL SOUND THE BUILDING FIRE ALARM SYSTEM.

AIR HANDLING UNIT AHU-B-1 OR B-2 CONTROL

NO SCALE

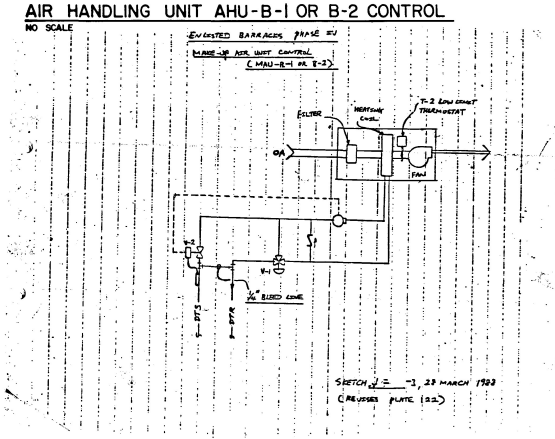

SEQUENCE OF OPERATION

THE MAKE-UP AIR UNIT (MAU-B) SHALL BE CONTROLLED BY A ON/OFF/AUTO SW. WHEN UNIT IS ACTIVATED, OUTSIDE AIR DAMPER SHALL OPEN. IN THE ON POSITION UNIT SHALL BE ACTIVATED.

AUTOMATIC POSITION:

SUMMER VENTILATION CYCLE - SWITCH SW-1 SHALL BE IN THE SUMMER POSITION WHEN THE SPACE TEMPERATURE RISES ABOVE THE 90°F SET POINT OF THE ROOM THERMOSTAT T-1, THE MAKE-UP AIR UNIT (MAU-B-) SHALL BE ENERGIZED. WHEN THE SPACE TEMPERATURE DROPS BELOW THE THERMOSTAT SET POINT, THE MAKE-UP AIR UNIT SHALL BE STOPPED.

WINTER HEATING CYCLE - SWITCH SW-1 SHALL BE IN THE WINTER POSITION. WHEN THE SPACE TEMPERATURE DROPS BELOW THE 68°F SET POINT OF THE ROOM THERMOSTAT T-1, THE MAU-B SHALL BE ENERGIZED. WHEN PIPE SURFACE MOUNTED TEMPERATURE SENSOR T-3 SENSES WATER TEMPERATURE 75°F OR ABOVE, THE TWO POSITION VALVE V-2 SHALL BE ENERGIZED TO ALLOW HOT WATER FLOW THRU THE HEATING COIL AND THE CIRCULATION PUMP P-B- SHALL BE ENERGIZED AND RUN CONTINUOUSLY. THE 3-WAY MIXING VALVE V-1 SHALL MODULATE WATER FLOW THROUGH THE COIL TO MAINTAIN THE ROOM TEMPERATURE SET POINT. THE LOW LIMIT THERMOSTAT T-2 SHALL DEENERGIZE MAKE-UP AIR UNIT FAN WHEN AIR TEMPERATURE REACHES THE 35°F LOW LIMIT SET POINT.

WHEN SWITCH IS OFF AND SPACE TEMP. DROPS BELOW 50°F, THE UNIT FAN SHALL OPERATE THROUGH RELAY-R-1 TO MAINTAIN A 50°F, SPACE TEMPERATURE.

MAKE-UP AIR UNIT CONTROL (MAU-B-1 or B-2)

NO SCALE

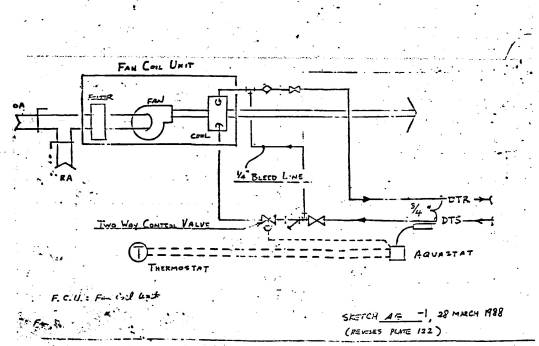

SEQUENCE OF OPERATION

GENERAL - THE FAN COIL UNIT SHALL BE STARTED AND STOPPED THROUGH A WALL-MOUNTED 3-SPEED SWITCH SW-1 LOCATED WITHIN CONDITIONED SPACE. THE SW-1 WILL BE MANUALLY OPERATED BY THE OCCUPANT TO POSITIONS, "OFF, LOW, MEDIUM, OR HIGH". RATED CONTROLS SHALL BE ENERGIZED. THE UNIT SHALL RUN CONTINUOUSLY UNLESS SWITCH SW-1 IS IN THE OFF POSITION. SEE RISER DIAGRAM (SHEET M-4) FOR WHICH UNITS HAVE TWO-WAY OR THREE-WAY VALVE CONTROL.

CHANGEOVER - AUTOMATIC CHANGEOVER CONTROL SHALL BE ACHIEVED VIA A PIPE SURFACE MOUNTED CHANGEOVER AQUASTAT SW-2. AS SURFACE TEMPERATURE RISES 75°F OR ABOVE, THE SW-2 ENERGIZES HEATING CIRCUIT AND AS SURFACE TEMPERATURE FALLS 60°F OR BELOW, THE SW-2 ENERGIZES COOLING CIRCUIT OF THE THERMOSTAT T-1.

COOLING CYCLE - SWITCH SW-2 SHALL BE IN THE COOLING POSITION AND SW-1 SHALL NOT BE IN THE "OFF" POSITION. WHEN THE SPACE TEMPERATURE RISES ABOVE THE 78°F SET POINT OF THE REMOTE CONCEALED THERMOSTAT T-1, THE CONTROL VALVE V-1 SHALL MODULATE OPEN TO ALLOW CHILLED WATER FLOW THROUGH THE COOLING COIL. WHEN THE SPACE TEMPERATURE DROPS BELOW THE THERMOSTAT SET POINT THE CONTROL VALVE SHALL MODULATE TO BI-PASS POSITION FOR THREE-WAY VALVES OR MODULATE CLOSE FOR TWO-WAY VALVES.

HEATING CYCLE - SWITCH SW-2 SHALL BE IN THE HEATING POSITION AND SW-1 SHALL NOT BE IN THE "OFF" POSITION. WHEN THE SPACE TEMPERATURE DROPS BELOW THE 68°F SET POINT OF THE THERMOSTAT T-1, THE CONTROL VALVE V-1 SHALL MODULATE OPEN TO ALLOW HOT WATER FLOW THROUGH THE HEATING COIL. WHEN THE SPACE TEMPERATURE RISES ABOVE THE THERMOSTAT SET POINT THE CONTROL VALVE SHALL MODULATE TO BI-PASS POSITION FOR THREE-WAY VALVES OR MODULATE CLOSE FOR TWO-WAY VALVES.

WHEN MULTISPEED SWITCH SW-1 IS IN THE "OFF" POSITION AND SPACE TEMPERATURE DROPS BELOW 35°F, THE UNIT FAN WILL OPERATE THROUGH A RELAY, R-1 TO MAINTAIN A 40°F SPACE TEMPEARTURE TO PROVIDE FREEZE PROTECTION.

FAN COIL UNITS CONTROL

NO SCALE

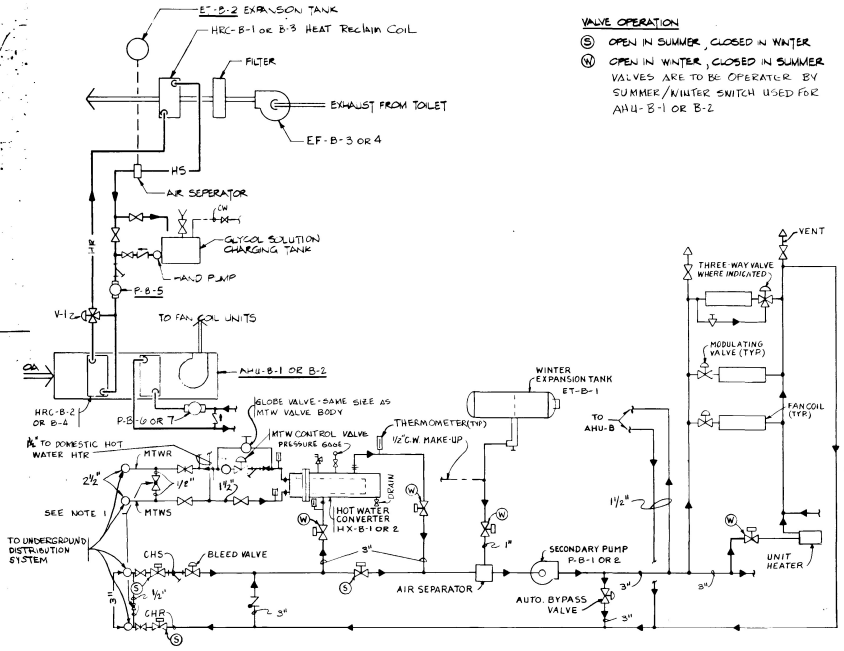

VALVE OPERATION

(S) OPEN IN SUMMER, CLOSED IN WINTER

(W) OPEN IN WINTER, CLOSED IN SUMMER

VALVES ARE TO BE OPERATED BY SUMMER/WINTER SWITCH USED FOR AHU-B-1 OR B-2

NOTES:

1. 1/2" ø 3000# BAR STOCK GLOBE VALVE. MAX. FLOW 1 GPM (ALSO APPLICABLE TO ADMIN/SUPPLY & HEADQUARTERS BLDGS)
2. SEE INDIVIDUAL EQUIPMENT (COIL) DETAILS FOR REQUIREMENTS FOR ALL VALVES, GAGES, UNIONS, ETC.

SYSTEM FLOW DIAGRAM

SCALE: NONE

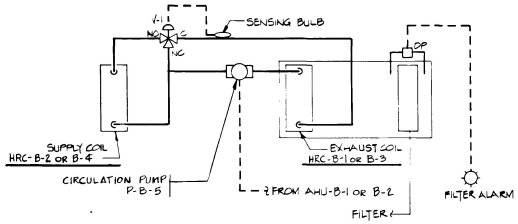

SEQUENCE OF OPERATION

CIRCULATION PUMP P-B SHALL BE IN OPERATION THROUGH AIR HANDLING UNIT AHU-B AND RUN CONTINUOUSLY.

THREE-WAY MIXING VALVE V-1 SHALL MODULATE FLUID FLOW THRU SUPPLY COIL HRC-B TO MAINTAIN GLYCOL TEMPERATURE, THE 35°F SET POINT OF SENSING BULB.

PUMP STATUS LIGHT SHALL BE ENERGIZED WHEN PUMP IS RUNNING AND DIRTY AIR FILTER ALARM SHALL BE ENERGIZED WHEN THE PRESSURE DROP ACROSS FILTER EXCEEDS 0.35 IN. WG. PUMP STATUS LIGHT AND DIRTY AIR FILTER ALARM SHALL BE LOCATED IN MECHANICAL ROOM.

HEAT RECOVERY SYSTEM CONTROL

NO SCALE

REV	DATE	DESCRIPTION	BY
2	MAY 90	REVISED AS BUILT	
1	3 APR 89	REVISED PER AMENDMENT P00009	

DEPARTMENT OF THE ARMY
BALTIMORE DISTRICT, CORPS OF ENGINEERS
BALTIMORE, MARYLAND

ABERDEEN PROVING GROUND MARYLAND

ENLISTED BARRACKS PHASE IV
BARRACKS BLDG.

CONTROLS AND FLOW DIAGRAM

DRAWING NUMBER F-721-90-12 PLATE 122

SCALE: NONE DATE 5 FEB. 1987 SHEET M-6

41827