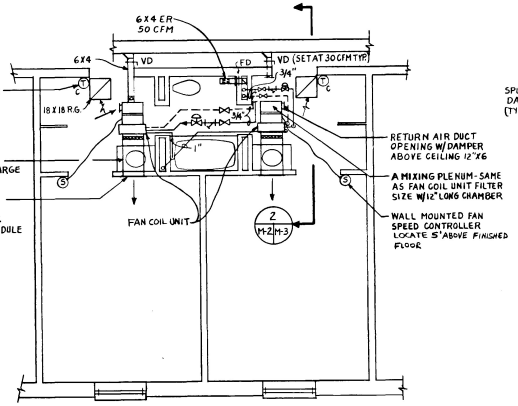

TYPICAL "2 PLUS 2" PERSONS ROOM
SCALE: 1/4" = 1'-0"

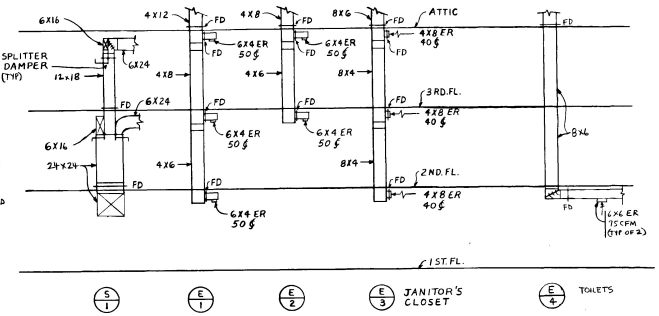

DUCT RISERS
SCALE: NONE

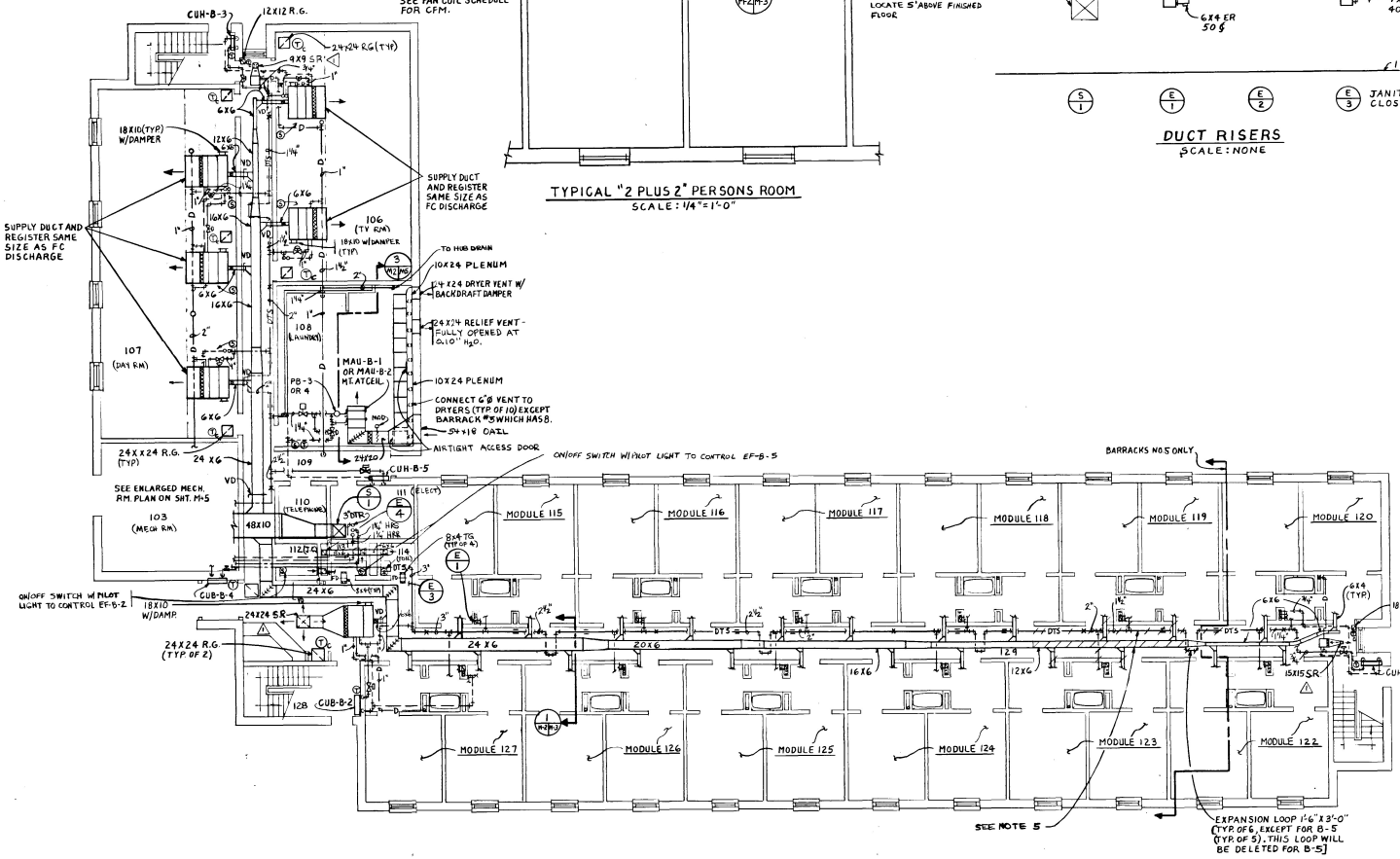

FIRST FLOOR PLAN
SCALE: 1/8" = 1'-0"

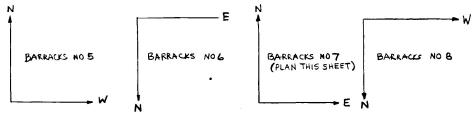

SCALE: 1/4 IN. = 1 FT.
SCALE: 1/8 IN. = 1 FT.

NOTES:

1. ALL EXHAUST RISERS TO BE DESIGNATED AS (E/1) UNLESS OTHERWISE INDICATED (FIRST, SECOND, THIRD, AND ATTIC FLOORS).
2. SEE RISER DIAGRAM FOR ALL PIPING AND FAN COIL SIZES.
3. DUCTWORK SHALL BE CONSTRUCTED FOR 1" STATIC PRESSURE AND SEALED FOR CLASS 'C'.
4. F.C. UNITS WITH 18X6 OR 18X10 RETURN DAMPER, SHALL HAVE AN 18" LONG MIXING PLENUM.
5. 12X6 DUCTWORK AND DTS LINE IN THIS AREA SHALL NOT BE INCLUDED IN BARRACKS NO 5. DUCTWORK, PIPING, FC UNIT, ETC BETWEEN MODULE 120 & 122 TO BE LOCATED BETWEEN MODULE 119 & 123 OF BARRACKS NO. 5.
6. SPEED CONTROLLER FOR F.C. UNITS IN LOBBY AND CORRIDOR TO BE LOCATED IN CEILING (TYPICAL FOR ALL FLOORS). SET AT HIGH SPEED.
7. SEE FAN COIL DETAIL FOR REQUIREMENTS ON ALL VALVES, GAGES, UNIONS, ETC.
8. PROVIDE ACCESS PANELS TO ALL VOLUME DAMPERS, VALVES, FIRE DAMPERS, ETC. LOCATED IN INACCESSIBLE CEILING SPACES.

REV	DATE	DESCRIPTION	BY
2	MAY 90	REVISED AS BUILT	
1	18 JAN 90	REVISED PER MOD P00032	

US Army Corps of Engineers
U.S. ARMY ENGINEER DISTRICT, BALTIMORE
CORPS OF ENGINEERS
BALTIMORE, MARYLAND

ABERDEEN PROVING GROUND — MARYLAND

ENLISTED BARRACKS PHASE IV
BARRACKS BLDG.
FIRST FLOOR PLAN, ENLARGED MODULE PLAN AND DUCT RISER

DRAWING NUMBER: F-721-90-12
PLATE: 118
SCALE: AS SHOWN
DATE: 5 FEB 1987
SHEET M-2

41823