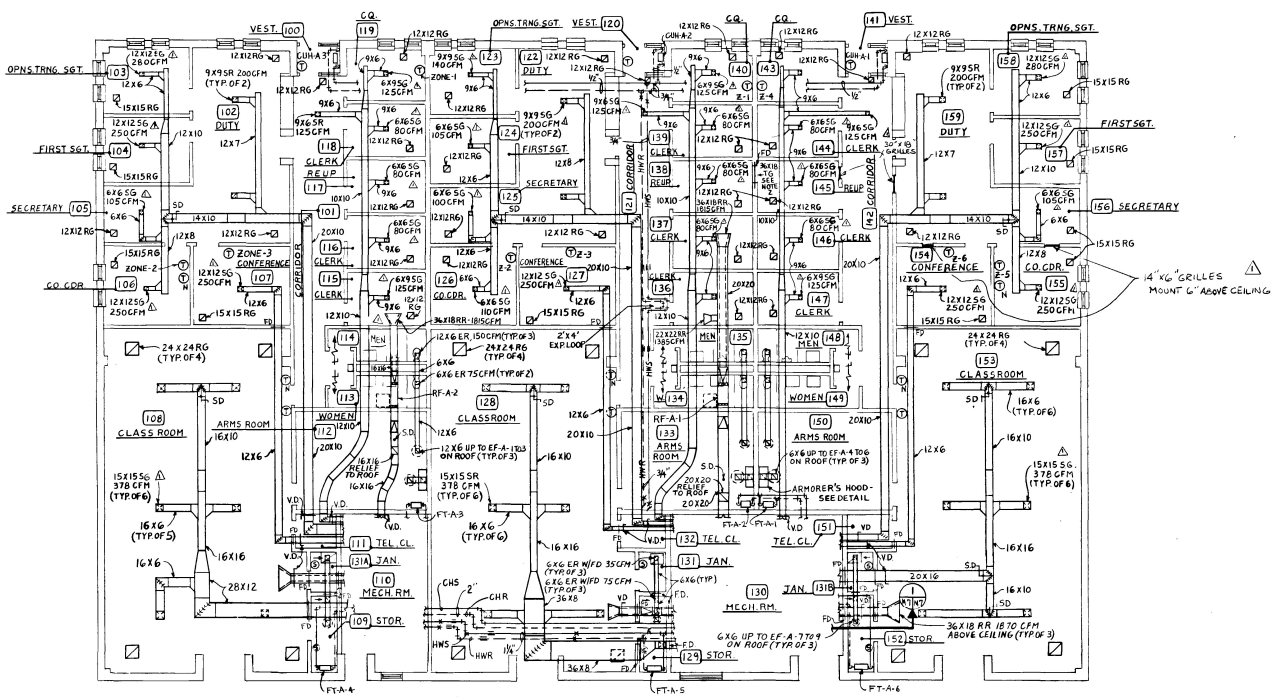

FLOOR PLAN

SCALE: 1/8"=1'-0"

NOTES:
1. ALL DUCTWORK TO BE CONSTRUCTED FOR 1" S.P. AND SEALED FOR CLASSIFICATION "C".
2. TRANSFER GRILL TO BE MTD. 6" ABOVE CEILING.
3. Ⓢ FOR STORAGE AND J.C. SHALL BE ON/OFF TYPE W/ PILOT LIGHT.
4. RMS. 114 & 135 SHALL HAVE 24"X 24" ACCESS PANEL TO RETURN FAN MOTOR.
5. DUCT, ER, AND FAN SIZES AS INDICATED FOR MEN'S (115) AND WOMEN'S (114) TOILET ROOMS APPLY TO LIKE ITEMS IN MEN'S (136 & 156) AND WOMEN'S (135 & 155) TOILET ROOMS.
6. DUCT AND FAN SIZES AS INDICATED FOR ARMS ROOM (154) APPLY TO LIKE ITEMS IN ARMS ROOM (113 & 134).
7. EXHAUST DUCTWORK IN TANK & STORAGE ROOMS TO BE COORDINATED WITH SUPPLY AND RETURN DUCTWORK FROM AHU'S.
8. PROVIDE ACCESS PANELS TO ALL VOLUME DAMPERS, VALVES, FIRE DAMPERS, ETC LOCATED IN INACCESSIBLE CEILING SPACES.

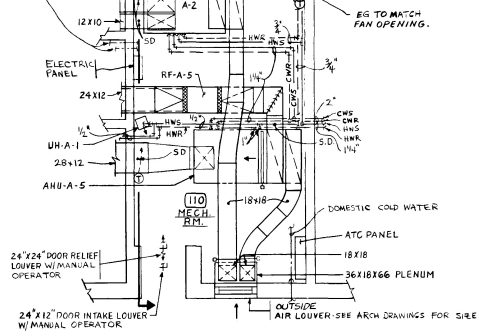

ENLARGED MECH. RM. PLAN

SCALE: 1/4"=1'-0"

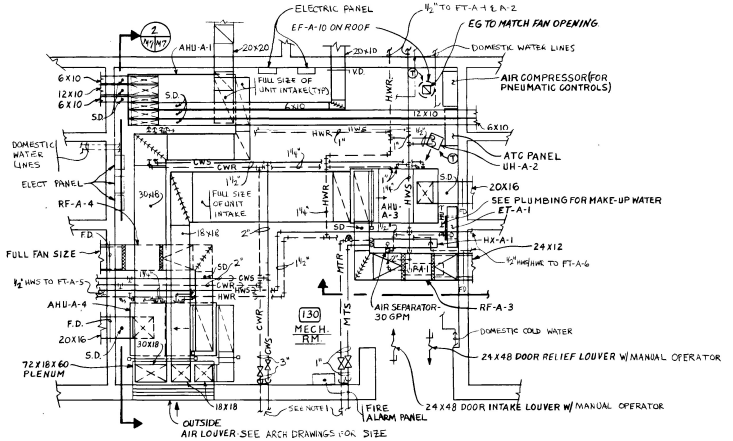

ENLARGED MECH. RM. PLAN

SCALE: 1/4"=1'-0"

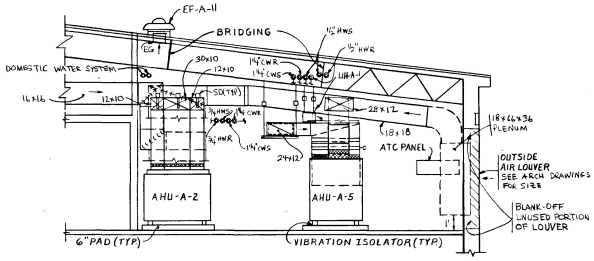

SECTION 3

SCALE: 1/4"=1'-0"

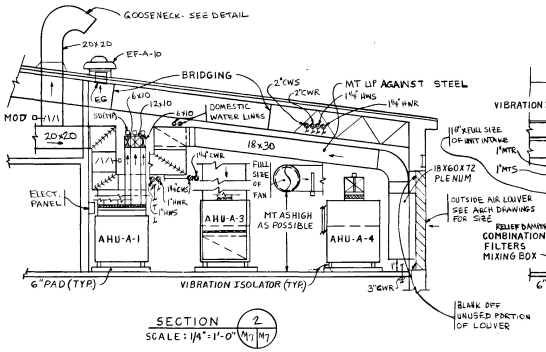

SECTION 2

SCALE: 1/4"=1'-0"

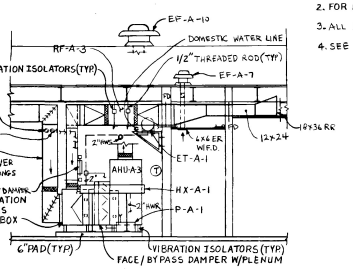

SECTION 1

SCALE: 1/4"=1'-0"

GENERAL NOTES:
1. FOR UNDERGROUND UTILITIES AND BUILDING ENTRANCE DETAILS SEE UNDERGROUND DISTRIBUTION DRAWINGS.
2. FOR PIPE SIZES SEE SYSTEM FLOW DIAGRAM ON SHT. M-8.
3. ALL MT AND HW PIPING SHALL BE HUNG FROM ABOVE BY SPRING HANGERS WITH 1" DEFLECTION.
4. SEE INDIVIDUAL EQUIPMENT (COIL) DETAILS FOR REQUIREMENTS ON ALL VALVES, GAGES, UNIONS, ETC.

SCALE: 1/8 IN. = 1 FT.

SCALE: 1/4 IN. = 1 FT.

REV	DATE	DESCRIPTION	BY
2	MAY 90	REVISED AS BUILT	
1	1-MAY 89	REVISED PER MOD P00015	

US Army Corps of Engineers

U.S. ARMY ENGINEER DISTRICT, BALTIMORE
CORPS OF ENGINEERS
BALTIMORE, MARYLAND

ABERDEEN PROVING GROUND MARYLAND

ENLISTED BARRACKS PHASE IV
ADMIN. AND SUPPLY BLDG.
FLOOR PLAN, ENLARGED MECH. RM PLANS AND SECTIONS

DRAWING NUMBER: F-721-90-12
PLATE: 123
SCALE: AS SHOWN
DATE: 5 FEB. 1987
SHEET M-7

41828