NOTES:

1. SEE SITE PLAN, SHEET ES-4, FOR WALKWAY AND PARKING LOT LIGHTING. SEE PANEL SCHEDULES FOR CIRCUIT DESIGNATIONS.
2. DAYTIME LIGHTING IN CORRIDORS, CIRCUIT A1-21, SHALL BE CONTROLLED BY A TIME SWITCH LOCATED IN THE ELECTRICAL ROOM.

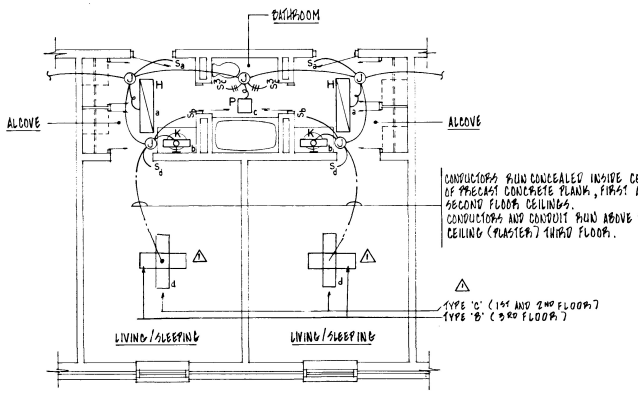

TYPICAL 2+2 ROOM LIGHTING PLAN

SCALE: 1/4" = 1'-0"

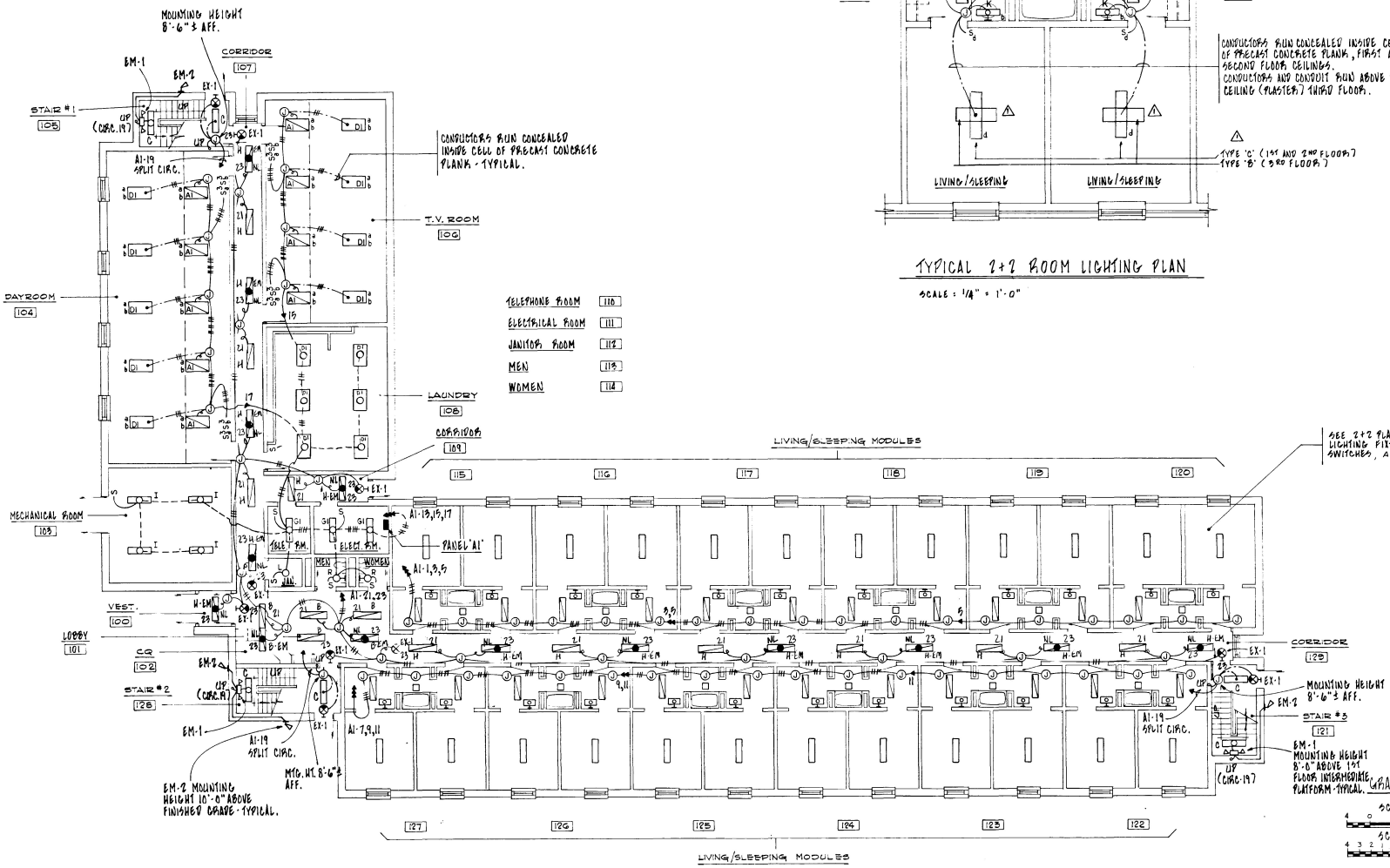

FIRST FLOOR PLAN - LIGHTING

SCALE: 1/8" = 1'-0"

GENERAL NOTES

1. WORK INDICATED IS TYPICAL FOR BARRACKS No. 5, 6, 7 AND 8 UNLESS OTHERWISE NOTED. TYPICAL FOR ALL BARRACKS PLANS.
2. IN BARRACKS No. 5 DELETE WORK INDICATED FOR THE FOLLOWING LIVING/SLEEPING MODULES:
   - 120, 122 } FIRST FLOOR
   - 217, 219 } SECOND FLOOR
   - 317, 319 } THIRD FLOOR
3. BARRACKS No. 5 HAS 42 MODULES, AND BARRACKS No. 6, 7 AND 8 HAVE 48 MODULES EACH.

GRAPHIC SCALES

SCALE: 1/8" = 1'-0"

SCALE: 1/4" = 1'-0"

REV	DATE	DESCRIPTION	BY
1	MAY 90	REVISED AS BUILT	

US Army Corps of Engineers

U.S. ARMY ENGINEER DISTRICT, BALTIMORE
CORPS OF ENGINEERS
BALTIMORE, MARYLAND

ABERDEEN PROVING GROUND MARYLAND

ENLISTED BARRACKS PHASE IV
BARRACKS BLDG.
FIRST FLOOR PLAN
LIGHTING

DRAWING NUMBER F-721-90-12 PLATE 176

SCALE: AS SHOWN DATE: 5 FEB. 1987 SHEET E-3

41881