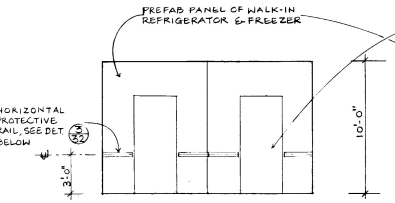

1/16 32 ELEVATION : REFRIGERATOR
SCALE : 1/4" = 1'-0"

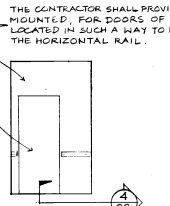

2 16 32 ELEVATION : FREEZER
SCALE : 1/4" = 1'-0"

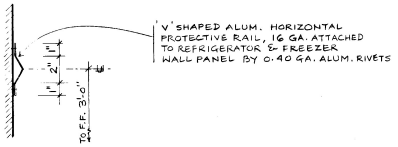

3 32 DETAIL : PROTECTIVE RAIL
SCALE : 3" = 1'-0"

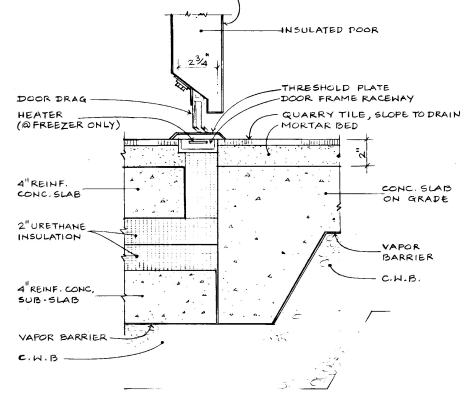

4 16 32 32 SECTION : SILL AT REFRIGERATED ROOMS
SCALE : 3" = 1'-0"

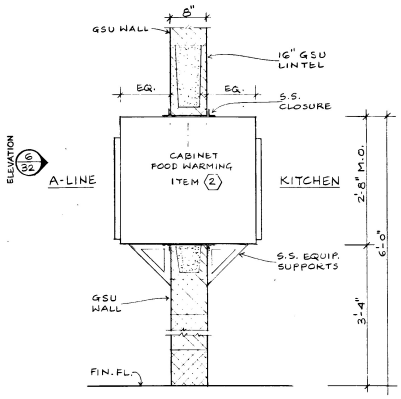

5 16 32 SECTION - DETAIL
SCALE : 1" = 1'-0"

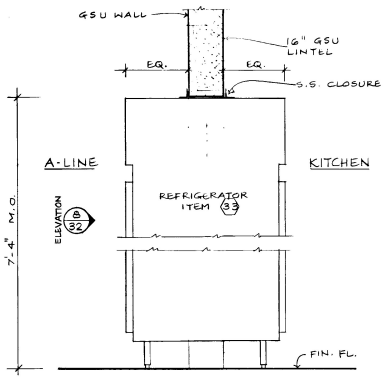

7 16 32 SECTION - DETAIL
SCALE : 1" = 1'-0"

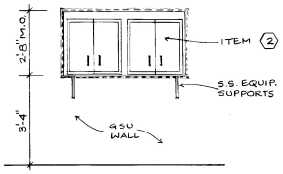

6 32 ELEVATION (PARTITION BETWEEN KITCHEN & A-LINE)
SCALE : 1/2" = 1'-0"

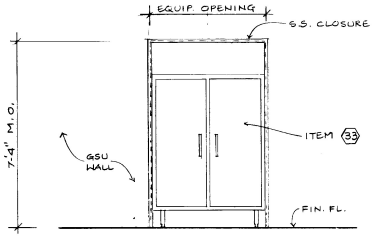

8 32 ELEVATION (PARTITION BETWEEN KITCHEN & A-LINE)
SCALE : 1/2" = 1'-0"

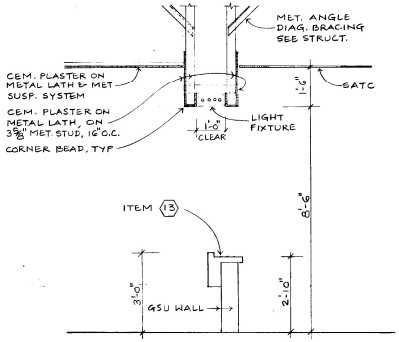

9 17 32 SECTION
SCALE : 1/2" = 1'-0"

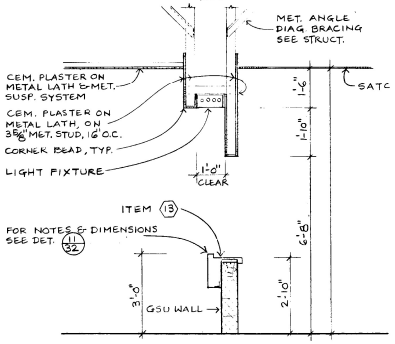

10 17 32 11 SECTION
SCALE : 1/2" = 1'-0"

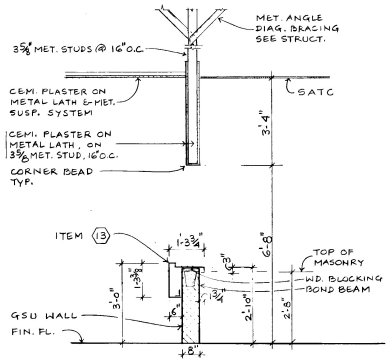

11 16 32 SECTION
SCALE : 1/2" = 1'-0"

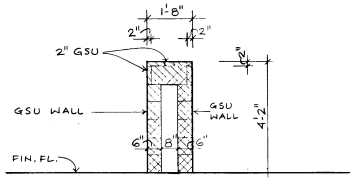

12 16 32 11 SECTION
SCALE : 1/2" = 1'-0"

REV	DATE	DESCRIPTION	BY
	MAY 90	AS BUILT	

U.S. ARMY ENGINEER DISTRICT, BALTIMORE
CORPS OF ENGINEERS
BALTIMORE, MARYLAND

US Army Corps of Engineers

ABERDEEN PROVING GROUND MARYLAND

ENLISTED BARRACKS PHASE IV

MISCELLANEOUS DETAILS

DRAWING NUMBER F-721-90-12 | PLATE 79

SCALE: AS SHOWN | DATE: 5 FEB. 1987 | SHEET A-32

41784