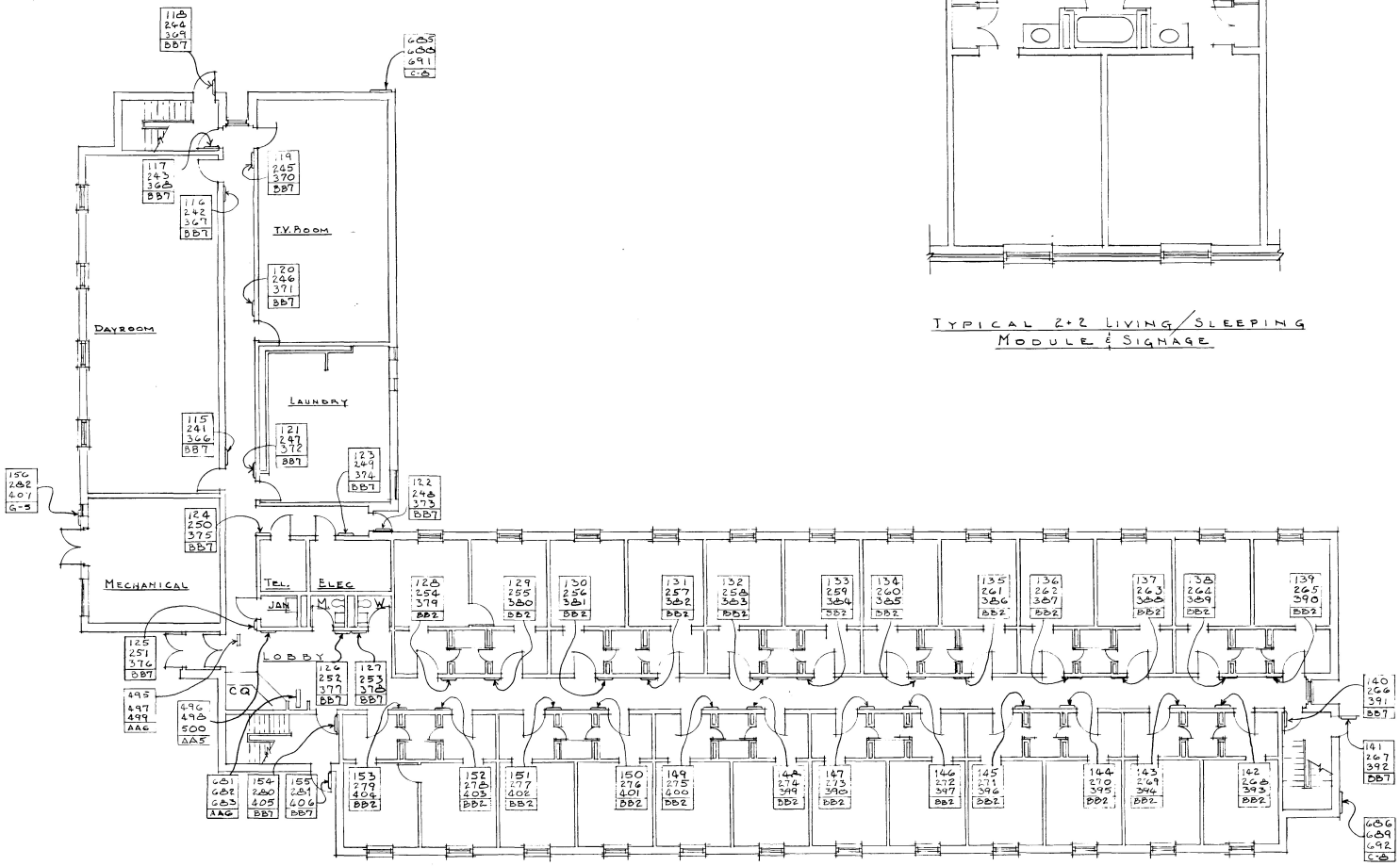

FIRST FLOOR PLAN
48 MODULES PER BUILDING

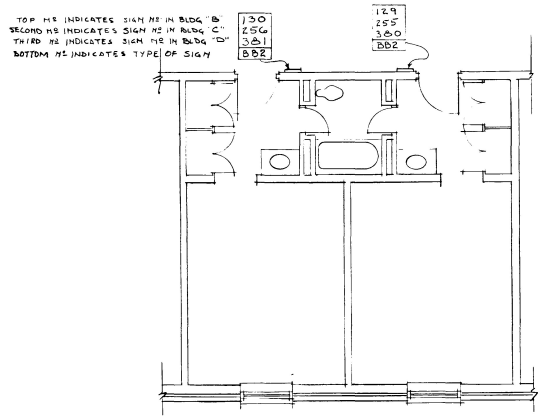

TYPICAL 2+2 LIVING/SLEEPING
MODULE & SIGNAGE

LEGEND INFORMATION:

130	INDICATES SIGN NO. IN BLDG "B" (6) ON FIRST LINE
256	INDICATES SIGN NO. IN BLDG "C" (7) ON SECOND LINE
381	INDICATES SIGN NO. IN BLDG "D" (8) ON THIRD LINE
BB2	INDICATES SIGN TYPE

REFER TO SPECIFICATION SECTION 10440 FOR SIGNAGE SCHEDULE.

NOTE:
BUILDING "B" PLAN IS OPPOSITE HAND. BUILDINGS "B", "C", AND "D" CORRESPOND TO BUILDING NOS 6, 7, AND 8. SEE SITE PLAN.

REV	DATE	DESCRIPTION	BY
	MAY 90	AS BUILT	

US Army Corps of Engineers

U.S. ARMY ENGINEER DISTRICT, BALTIMORE
CORPS OF ENGINEERS
BALTIMORE, MARYLAND

ABERDEEN PROVING GROUND — MARYLAND

ENLISTED BARRACKS PHASE IV
BUILDINGS "B", "C" & "D"

SIGNAGE LAYOUT

DRAWING NUMBER: F-721-90-12
PLATE: 94

SCALE: NO SCALE | DATE: 5 FEB. 1987 | SHEET A-47

41799