Description:

Two stage water-cooled portable water chiller system. System capacity indicated on table is the approximate BTU/hr based on a leaving fluid temperature of 50°F with a condenser water temperature of 85°F.

CAPACITY ±5% AT 50° LCWT / 85°F CONDENSER WT		240,000 BTU /HR				
COMPRESSOR / REFRIGERANT		TANDEM HERMETIC SCROLLS / R410A				
CONDENSER TYPE		STAINLESS STEEL / COPPER BRAZED				
EVAPORATOR TYPE		STAINLESS STEEL / COPPER BRAZED				
FLUID CONNECTIONS		2" MNPT (IN/OUT)				
ELECTRICAL:	V - Ø - HZ	COMP RLA / LRA (ea)		PUMP FLA	MCA	MOCP
- 1	575 - 3 - 60	12.8	80	3.3	32.1	45
- 5	230 - 3 - 60	33.3	239	8.4	83.3	110
- 6	460 - 3 - 60	17.9	125	3.9	44.1	60
PUMP HP / OUTPUT		3.0 HP / 95 GPM @ 30 PSI				
TANK SIZE / CONSTRUCTION		80 GALLON / 304 STAINLESS STEEL TANK WITH LID				
DIMENSIONS		64" L x 42" W x 55 ½" H				
WEIGHT (APPROX.)		1100 LBS				

Note: All specifications subject to change without notice. Specify voltage and ambient condition upon ordering.
MCA: Minimum circuit amps per UL 1995. MOCP: Maximum overcurrent protective device per UL 1995.

STANDARD FEATURES:

- **Controls:** Electronic programmed temperature controller with constant (set point & process) temperature readout.
- **Refrigeration Components:** Efficient scroll compressors, sight glass/moisture indicators, balanced port expansion valves, filter drier, service ports and or pump down valves, pressure actuated head pressure controls, liquid receiver.
- **Process Fluid Components:** Bronze "Y" strainer with 20 mesh stainless steel screen. Pumps are stainless steel centrifugal. Tanks are insulated with shoe box lid, fill port, and level sight glass. Portable systems will include a bypass flow valve.
- **Safety Controls:** High and low refrigerant pressure, high and low fluid temperature, freeze, low water flow, overloads for compressor, safety fuses or overloads for pump.
- **Construction:** Welded steel powder coated frame and full metal cabinet, copper piping connections.
- **Warranty:** One year parts / five year compressor.

SUITABLE AMBIENT CONDITIONS/FEATURES:

- **IND:** Indoor use only. Casters on frame.
- **40:** Suitable for outdoor use with an ambient of 40°F ambient.
- **0:** Suitable for outdoor use to 0°F ambient.
- **M20:** Suitable for outdoor use to -20°F ambient. Includes hot gas bypass.

[1] Flow Design (_=Portable, ST=Stationary, RF=Reverse Flow, EXCH=Extra Heat Exchanger, DP=Dual Pump, DR=Dual Return)
[2] Leaving Fluid Temperature (_=Standard, LT=Low Temperature-specify lowest temperature in °F)
[3] Ambient Temperature Conditions (see above)
[4] Electrical Power Code (see above)

Performance Curve and Data Sheet

PUOD-240-003-0-0

3-Hp/3Ø Motor ODP/ Pump with 5.5”Impeller and 0.250”Vane at 3500rpm

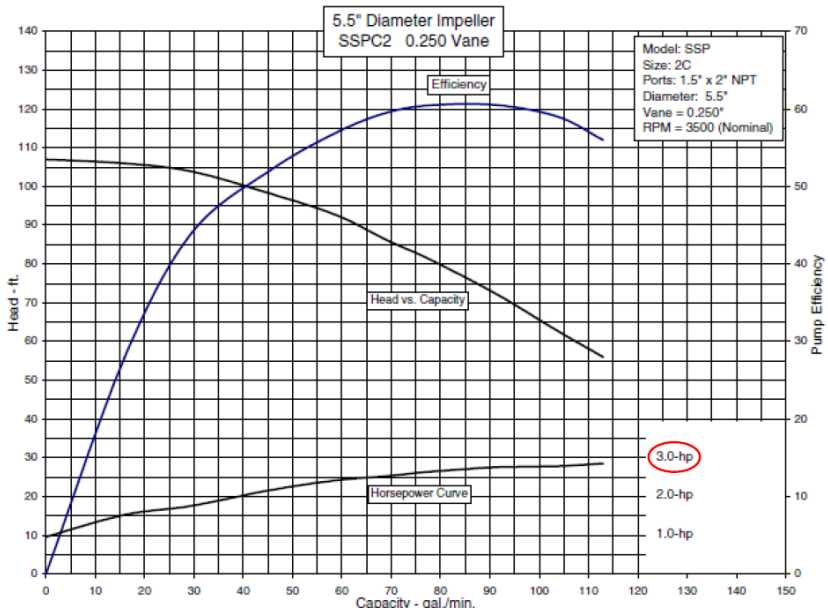

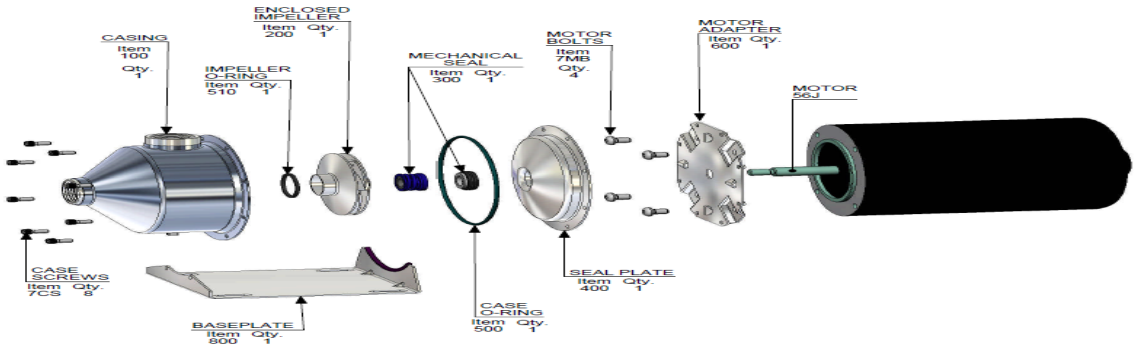

ASP-SSPC Pump/Motor Assembly Exploded View

- If needed, the pump label is located on the pump casing near outlet port under the insulation. Carefully pull insulation up near the unglued section. Pump Base *(not supplied with footed motors)*
- Reference the chiller serial number when ordering parts for specific supplied pump.

TECHNICAL SPECIFICATIONS-

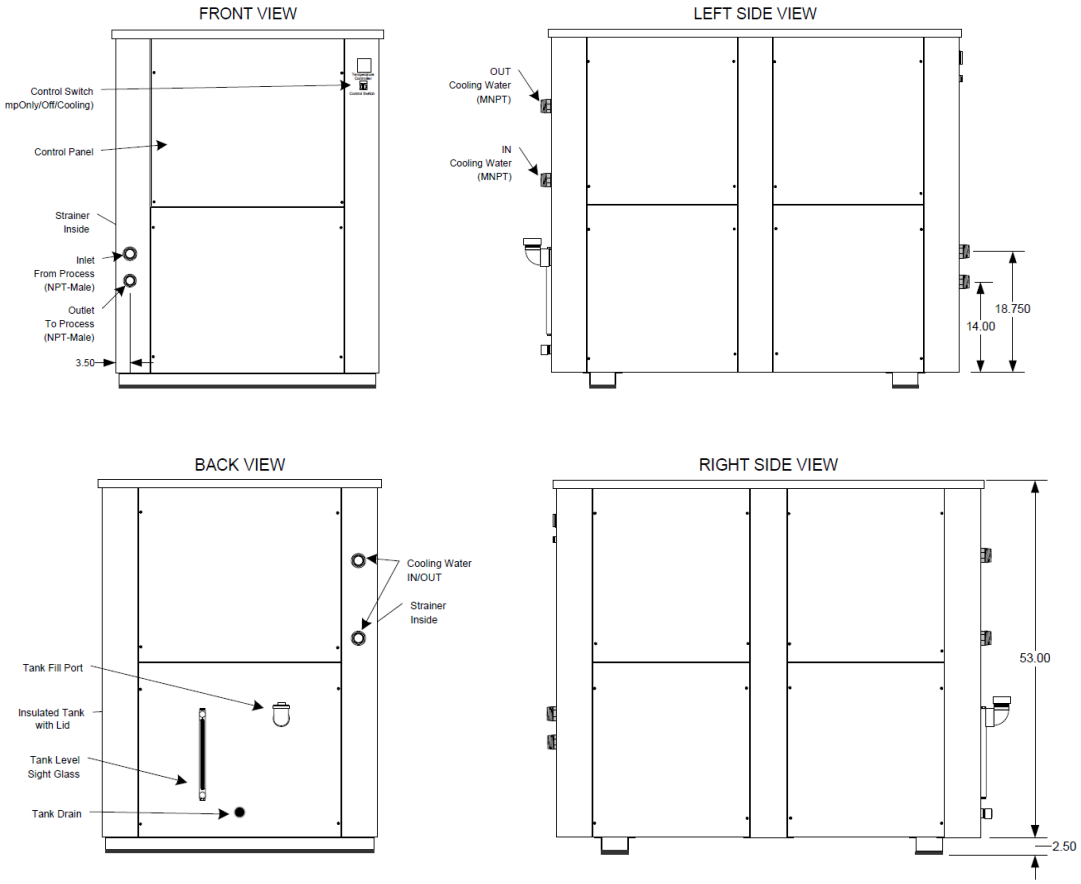

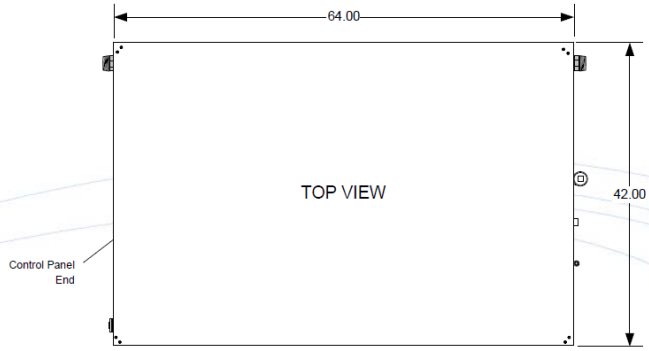

NOTES

- Unit should be installed with at least 2' clearance on all sides.
- Water-cooled units require water flow to the condenser based on the needs of the chiller.
- Dimensions are approximate. (inches)
- Casters (Optional) Add 6 ½"
- All specifications subject to change without notice.

DRAWN	SIZE	DIMENSION NOTES	DWG NO	REV
ENGINEERING	A	Dimensions are in inches Unless otherwise specified. +-¼"	**INSTALLATION DRAWING** **WCWC-150-240-E-_ (Typical)**	1

STANDARD/PORTABLE/PACKAGE (-)

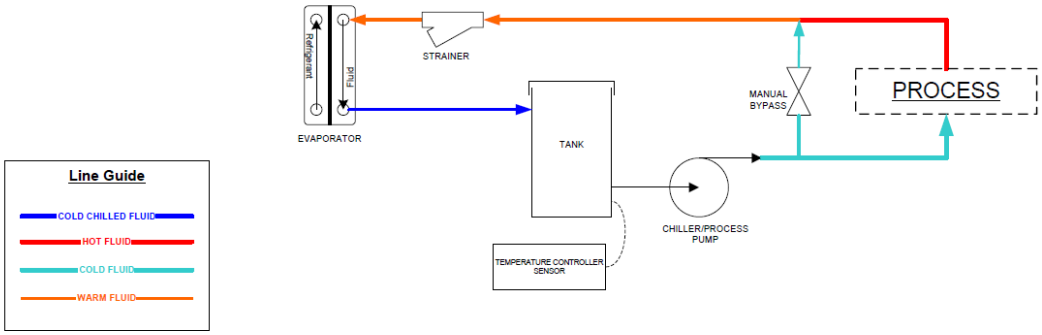

	SIZE	NOTES	DESCRIPTION	REV
ENGINEERING	A	- All designs are subject to change without notice. - The diagrams are to be used as a basic flow diagram only. - Color Code is for relative temperature comparison. - Additional components may be included. - Evaporator may be located in tank.	**Typical FLOW OPTIONS for Chiller Circuits**	1

ICM 450 THREE PHASE LINE VOLTAGE MONITOR

Stop Motor Burnouts!

Programmable 3-phase line voltage monitor with 25-fault memory, high temperature LCD display, easy setup & clear, diagnostic readout of system faults, 190 to 630 VAC operation...

The ICM450 was specifically designed to protect motors and other 3-phase loads from premature failure and damage due to common voltage faults such as voltage unbalance, over/under voltage, phase loss, reversal, incorrect sequencing and rapid short cycling.

Mode of Operation

At power up, the **ICM450** evaluates the incoming power for proper phase sequence, amplitude, and symmetry (voltage unbalance). If the three phase input at the line side connections is within user-set parameters, the load energize LED is turned on and the internal relay is energized. Continuity will be across terminals 4 and 6. If connections are made to the load side terminals, the **ICM450** will transfer monitoring over to the load side only.

When a critical fault condition (phase loss or phase reversal) is present, the relay will immediately de-energize, the load-energized LED will turn off, the fault LED will flash, and the fault is written to memory. Continuity will be across terminals 4 and 5.

If a non-critical fault condition (unbalance, high or low voltage) is present, the **ICM450** will ignore it during the interro-gation delay time. If it is still present following the interrogation delay time, the relay will de-energize, the load-energized LED will turn off, the fault LED will flash, and the fault is written to memory. Continuity will be across terminals 4 and 5.

The **ICM450** will store the last 25 faults in memory. The relay will not energize if any fault conditions exist. The integral adjustable delay on break timer will prevent short cycling.

Features

- Reliable, high temperature LCD display
  - Simplifies system setup and diagnostics. Indicates condition of incoming line voltage, fault conditions, system set-points and other user adjustments.
  - Temperature: -20°C to +75°C (-4°F to + 167°F)
- Simultaneous voltage display (an ICM exclusive)
  - View all 3 phases, no need to scroll through readouts.
- Fully adjustable variables
  - User may easily set and adjust variables in SETUP mode:
    - Line voltage: 190 to 600 VAC
    - Voltage unbalance: 2 to 20%
    - Delay on break period: 0 to 10 minutes
    - Fault interrogation: 0 to 15 seconds
    - Over/under voltage: 2 to 25%
    - Reset modes: AUTO or 0 to 10 retries
    - Control mode: ON or OFF
- 25-fault memory and storage
  - Clearly displayed on LCD
- Ultra bright LED indicators
  - Shows current mode:
    - Setup LED
    - Load energized LED
    - Control voltage LED
    - Fault LED
- Easy to install and configure
  - Simple 7-step push-button setup
  - Wiring diagram on unit
  - Installation and application guide included

Wiring Diagram

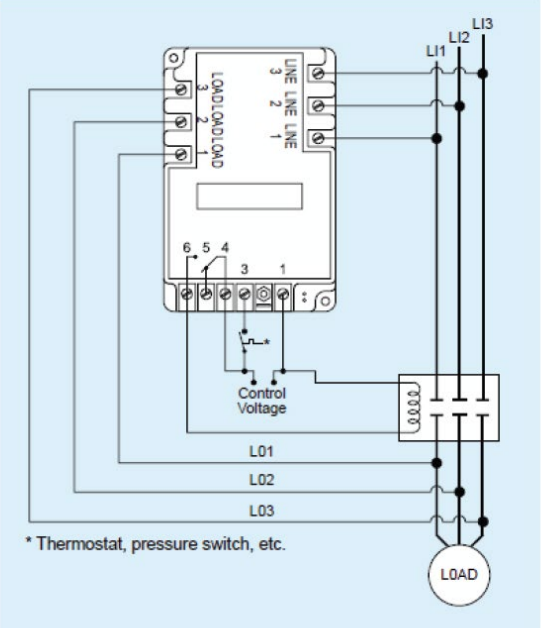

All features and specifications subject to change without notice.

THREE PHASE SURGE PROTECTION

When a surge occurs, the ICM three-phase surge protective device will absorb the surge up to the specified limitations of the device. ICM incorporates superior thermally protected metal oxide varistor technology into the three-phase surge suppressors, which allows for safe disabling of the surge elements when a surge exceeds the thermal limits of the device. There is a single status light on the controls which identifies operational status when illuminated.

FEATURES & BENEFITS

- Maximum Surge Current Capacity: 150 kA
- NEMA Type 4X watertight plastic enclosure for outdoor and indoor installation
- Green LED indicates surge protection present
- Easily connects to electrical panel or disconnect for indoor and outdoor applications

SPECIFICATIONS

- **Service voltage (3-phase):** 480 VAC Delta or 277/480 VAC Wye
- **Short Circuit Current Rating (SCCR):** 200 kA
- **Nominal discharge current (In):** 20kA
- **Protection mode:**
  - 3 for Delta configuration
  - 6 for Wye configuration (neutral tied to ground)
- **Surge protection technology:** TFMOV
- **Input power frequency:** 50/60 Hz
- **Maximum surge current:** 150 kA

Delta PLC Communications

RS232

The Delta PLC module (DVP14SS2) uses the communication listed below. Integral to the PLC is the ability for an external system to connect and read certain information, as shown.

Device Communication Setup

Port: PLC COM1
Protocol: MODBUS, ASCII mode
Address: 1
Data Length: 7
Parity: Even
Stop Bits: 1
Baud Rate: 9600

Registers

The following are Read only. No password required to access "Open-POU".

REGISTER	ADDRESS	DESCRIPTION	VALUE
D0	1000 hex	Chiller Mode of Operation	1 = Cooling Cycle 2 = Pump Only 3 = Off
D1	1001 hex	Set Value (SV) on Temperature Controller in °F	
D2	1002 hex	Process Value (PV) on Temperature Controller in °F	
D3	1003 hex	Fault# See Chart	

RS-232 Wiring / Cable (sold separately)

Definitions of the pins in PLC COM1:

(It is suggested that users should use the Delta communication cable DVPACAB2A30.) units shown are in mm.

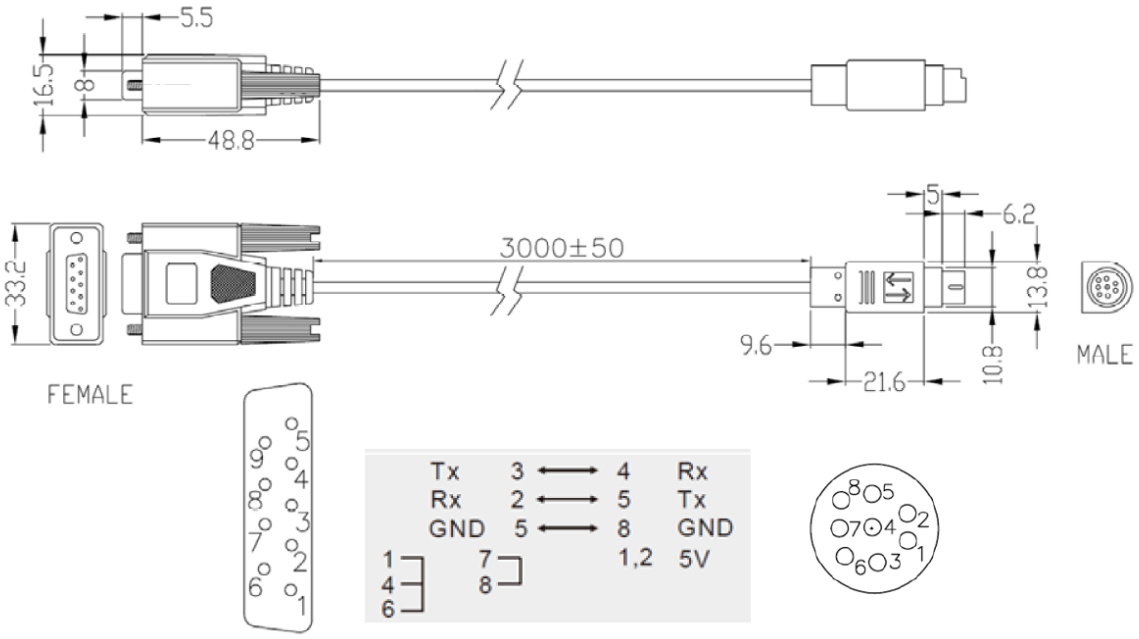

Model: RCP-F-H2

Description:

Remote Control Panel with Human Machine Interface (HMI) via RS232 communications in Flat Panel Mount enclosure. For remote control of chiller operation. The typical panel design provides the ability to perform all the functions as capable on the chiller locally. Operation of the chiller control circuit including On/Off and temperature monitoring and adjustment. The actual functions on the panel will depend on the options and accessories with the chiller. Master control is local on the chiller system while the ability to modify can be switched to the RCP. Suitable for wall mounting for indoor use.

MODEL	RCP-F-H2
HMI DISPLAY FUNCTIONS	COOLING MODE STATUS INDICATOR CHILLER MODE – "PUMP ONLY/OFF/COOLING CYCLE" PROCESS AND SET VALUE TEMPERATURES DIAGNOSTICS OF INPUTS/OUTPUTS ALARM INDICATOR AND BUZZER (WITH SILENCER BUTTON)
HMI MODIFY FUNCTIONS	SET VALUE TEMPERATURE ADJUST SYSTEM ON/OFF (MASTER CONTROL IS LOCALLY)
ENCLOSURE	WALL FLUSH-MOUNTED TEXTURED PAINTABLE PLASTIC WITH RECESSED LOW VOLTAGE BOX
DIMENSIONS (H x W x D)	6-7/8" x 9-7/8" x 4"
WALL THICKNESS	FROM 1/2" TO 1-1/2"
WEIGHT (APPROX.)	2 LBS
CONNECTIONS	USE STANDARD ETHERNET CABLE* (UP TO 50FT MAX)
SYSTEM INTERFACE	CHILLER TO INCLUDE A LOCAL/HMI SWITCH. COMMUNICATIONS VIA DELTA RS232 PROTOCOL.
ELECTRICAL	24VDC*
WARRANTY	ONE YEAR PARTS

Note: All design and specifications subject to change without notice.

*Wiring will need to be field supplied and installed between the chiller and the remote panel, with standard Ethernet cable (Providing communications and Power-Over-Ethernet (POE)).

Typical Main Screen Display (Shown with Process Pump Control Option)

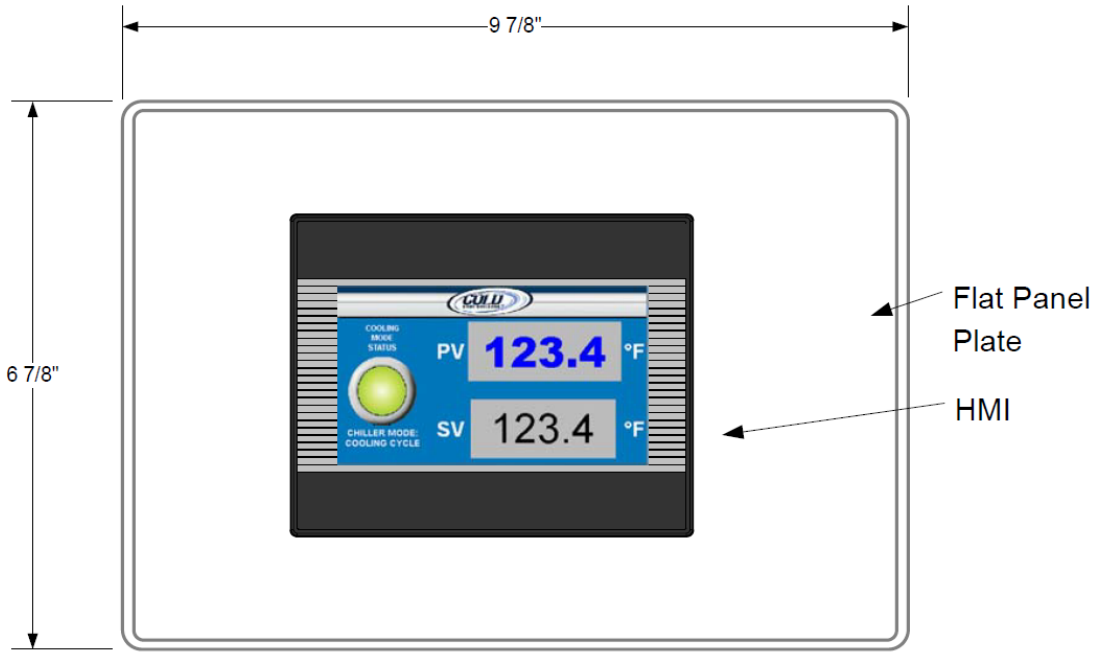

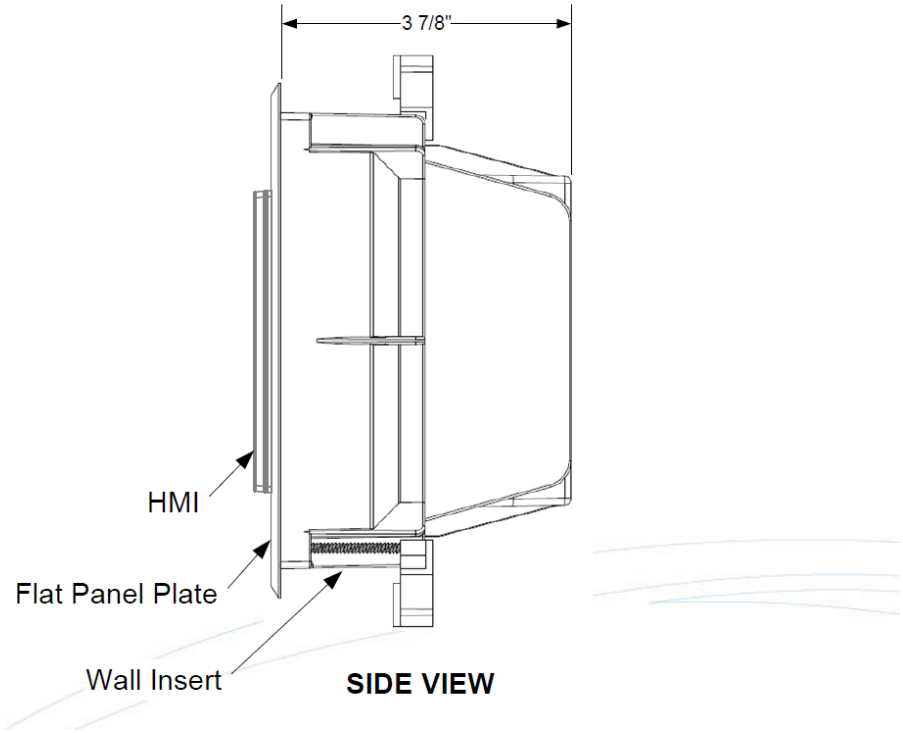
3 7/8"
HMI
Flat Panel Plate
Wall Insert
SIDE VIEW