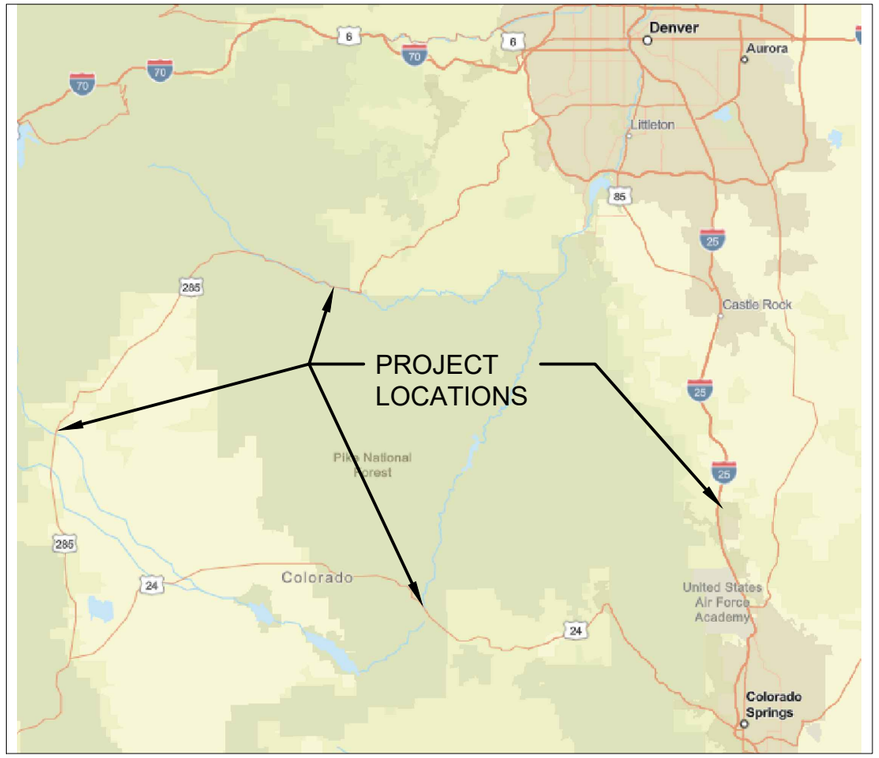

UNITED STATES DEPARTMENT OF AGRICULTURE
FOREST SERVICE

ROCKY MOUNTAIN REGION

PIKE-SAN ISABEL NATIONAL FORESTS & CIMARRON AND COMANCHE NATIONAL GRASSLANDS

SOUTH PARK/PIKES PEAK/SOUTH PLATTE RANGER DISTRICTS

PIKE UNDERGROUND UTILITIES UPGRADE

I HAVE REVIEWED THE TECHNICAL ASPECTS OF THESE DRAWINGS:

CHARLES HOGENAUER (Affiliate) — Digitally signed by CHARLES HOGENAUER (Affiliate) Date: 2026.04.29 14:08:03 -06'00'

PROJECT MANAGER — DATE

PHILLIP KRIEBLE — Digitally signed by PHILLIP KRIEBLE Date: 2026.05.18 12:13:02 -06'00'

FOREST ENGINEER — DATE

RECOMMENDED BY:

GERARDO CHAVARRIA — Digitally signed by GERARDO CHAVARRIA Date: 2026.05.19 07:06:51 -06'00'

ENGINEERING/REGIONAL SPECIALIS — DATE

THESE DRAWINGS COMPLY WITH THE FOREST PLAN AND PROJECT SPECIFIC NEPA DOCUMENTATION:

RYAN NEHL — Digitally signed by RYAN NEHL Date: 2026.05.18 16:25:28 -06'00'

FOREST SUPERVISOR — DATE

APPROVED BY:

CORRINE KEGEL — Digitally signed by CORRINE KEGEL Date: 2026.05.27 08:59:32 -06'00'

REGIONAL ENGINEER — DATE

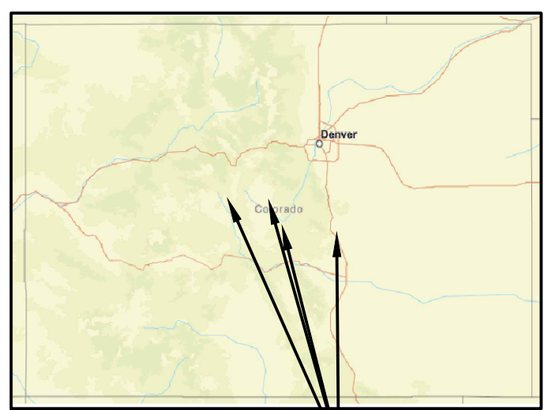

PROJECT LOCATIONS

PROJECT ADDRESS

Lake George Work Center
140 Trail Creek Road,
Lake George, CO 80827
(38.9794°, -105.3534°)

Monument Fire Center
3751 Mt. Herman Rd
Monument, CO 80132
(39.0855°, -104.9051°)

Fairplay Work Center
310 2nd Street
Fairplay, CO 80440
(39.2282°, -106.00537°)

AG Ranch Work Center
56052 S Hwy 285
Shawnee, CO 80475
(39.423277°, -105.554510°)

INDEX

	TITLE OF SHEET
T1.1	TITLE SHEET
T1.2	GENERAL NOTES
C1.1	LAKE GEORGE SITE PLAN: REPLACEMENT SEWER LINES
C1.2	SECTION DETAIL: LG OFFICE SEWER LINES
C1.3	SECTION DETAIL: LG SEPTIC SYSTEM
C2.1	MFC SITE PLAN: REPLACEMENT SEWER LINES
C2.2	MFC SITE PLAN: REPLACEMENT HYDRANTS
C2.3	SECTION DETAIL: MFC CLASSROOM SEWER LINES
C3.1	FAIRPLAY WC SITE PLAN: REPLACEMENT WATERLINE
C4.1	AG RANCH SITE PLAN: SEPTIC TANK REPLACEMENT
D1.1	DETAILS: LAKE GEORGE SEPTIC
D1.2	DETAILS: LAKE GEORGE SEPTIC 2
D1.3	DETAILS: HYDRANT AND TRENCH
D1.4	DETAILS: AG SEPTIC TANK

UNITED STATES DEPARTMENT OF AGRICULTURE

FOREST SERVICE

R2
ROCKY MOUNTAIN REGION

STAMPS, LOGOS, AND SEALS

NO.	REVISION / ISSUE	DATE
3		
2		
1		

PROJECT NAME

PIKE UNDERGROUND UTILITIES UPGRADE

PIKE-SAN ISABEL NATIONAL FORESTS & CIMARRON AND COMANCHE NATIONAL GRASSLANDS

DRAWING TITLE

TITLE SHEET

ARCHIVE NO.

DESIGNER: C.HOGENAUER
CHECKED: P. KRIEBLE
DATE: 05/01/2026
SUB SHEET NO.: T1.1
SHEET: 01 OF 14

4/29/26 09:57 CHARLESHOGENAUER C:\USERS\CHARLESHOGENAUER\BOX\7300BUILDINGS&STRUCTURES\7310_BUILDING&FACILITIES\10_SOUTHPARK\LAKE_GEORGE_WC_10008\WC SITE & UTILS\LOWER SEPTIC\PUUU CONTRACT\DESIGN\CAD\FS CAD - TITLE SHEET-PUUU.DWG;

GENERAL NOTES

1. ALL MATERIALS AND WORKMANSHIP SHALL BE IN CONFORMANCE WITH THE LATEST STANDARDS AND SPECIFICATIONS OF THE COLORADO DEPARTMENT OF TRANSPORTATION, FOREST SERVICE FIRE PROTECTION REQUIREMENTS, AND APPLICABLE STATE SPECIFICATIONS. THE CONTRACTOR SHALL HAVE IN POSSESSION AT THE JOB SITE AT ALL TIMES ONE (1) SIGNED COPY OF APPROVED PLANS, STANDARDS AND SPECIFICATIONS. CONTRACTOR SHALL CONSTRUCT AND MAINTAIN EMERGENCY ACCESS ROUTES TO THE SITE AND STRUCTURE AT ALL TIMES PER THE APPLICABLE FOREST SERVICE FIRE PROTECTION DISTRICT REQUIREMENTS. THE CONTRACTOR SHALL OBTAIN WRITTEN APPROVAL FOR ANY VARIANCE TO THE ABOVE DOCUMENTS. NOTIFY CONTRACTING OFFICER OF ANY CONFLICTING STANDARDS OR SPECIFICATIONS. IN THE EVENT OF ANY CONFLICTING STANDARD OR SPECIFICATION, THE MORE STRINGENT OR HIGHER QUALITY STANDARD, DETAIL OR SPECIFICATION SHALL APPLY.

2. THE CONTRACTOR SHALL OBTAIN, AT THEIR OWN EXPENSE, ALL APPLICABLE CODES, LICENSES, STANDARD SPECIFICATIONS, PERMITS, BONDS, ETC., WHICH ARE NECESSARY TO PERFORM THE PROPOSED WORK, INCLUDING, BUT NOT LIMITED TO STATE GROUNDWATER DISCHARGE AND COLORADO DEPARTMENT OF HEALTH AND ENVIRONMENT (CDPHE) STORMWATER DISCHARGE PERMIT ASSOCIATED WITH CONSTRUCTION ACTIVITY.

3. THE CONTRACTOR SHALL BE RESPONSIBLE FOR NOTIFYING THE CONTRACTING OFFICER AT LEAST 48 HOURS PRIOR TO START OF ANY CONSTRUCTION, PRIOR TO BACKFILLING, AND AS REQUIRED BY PROJECT SPECIFICATIONS. THE CONTRACTOR SHALL CONTINUE WITH NOTIFICATIONS THROUGHOUT THE PROJECT AS REQUIRED BY THE STANDARDS AND SPECIFICATIONS. CONTRACTOR SHALL NOTIFY THE CONTRACTING OFFICER ONE WEEK PRIOR TO PLANNED PARKING AND DRIVE ACCESS CLOSURES.

4. EXISTING UTILITIES IDENTIFIED AS ABANDONED MAY BE REMOVED IF ENCOUNTERED. PLUS EACH OPEN END AT POINTS OF REMOVAL.

5. THE LOCATIONS OF EXISTING UTILITIES ARE SHOWN IN THE APPROXIMATE LOCATION BASED ON INFORMATION BY OTHERS. NOT ALL UTILITIES MAY BE SHOWN. THE CONTRACTOR SHALL DETERMINE THE EXACT SIZE, LOCATION AND TYPE OF ALL EXISTING UTILITIES WHETHER SHOWN OR NOT BEFORE COMMENCING WORK. THE GOVERNMENT ASSUMES NO RESPONSIBILITY FOR THE ACCURACY OR COMPLETENESS SHOWN ON PLANS. THE CONTRACTOR SHALL BE FULLY AND SOLELY RESPONSIBLE FOR ANY AND ALL DAMAGES AND COSTS WHICH MIGHT OCCUR BY THE CONTRACTOR'S FAILURE TO EXACTLY LOCATE AND PRESERVE ANY AND ALL UTILITIES. THE CONTRACTOR SHALL NOTIFY ALL PUBLIC AND PRIVATE UTILITY COMPANIES AND DETERMINE THE LOCATION OF ALL EXISTING UTILITIES PRIOR TO PROCEEDING WITH GRADING AND CONSTRUCTION. ALL WORK PERFORMED IN THE AREA OF UTILITIES SHALL BE PERFORMED AND INSPECTED ACCORDING TO THE REQUIREMENTS OF THE UTILITY OWNER. LIKEWISE, THE CONTRACTOR SHALL BE RESPONSIBLE FOR LOCATING AND MAPPING ANY EXISTING UTILITY (INCLUDING DEPTH) WHICH MAY CONFLICT WITH THE PROPOSED CONSTRUCTION, AND FOR RELOCATING ENCOUNTERED UTILITIES AS DIRECTED BY THE CONTRACTING OFFICER. CONTRACTOR SHALL CONTACT AND RECEIVE APPROVAL FROM GOVERNMENT BEFORE RELOCATING ANY ENCOUNTERED UTILITIES. CONTRACTOR RESPONSIBLE FOR SERVICE CONNECTIONS, AND RELOCATING AND RECONNECTING AFFECTED UTILITIES AS COORDINATED WITH GOVERNMENT, INCLUDING NON-MUNICIPAL UTILITIES (TELEPHONE, GAS, CABLE, ETC., WHICH SHALL BE COORDINATED WITH THE UTILITY OWNER). THE CONTRACTOR SHALL IMMEDIATELY CONTACT CONTRACTING OFFICER UPON DISCOVERY OF A UTILITY DISCREPANCY OR CONFLICT. AT LEAST 48 HOURS PRIOR TO CONSTRUCTION, THE CONTRACTOR SHALL NOTIFY THE UTILITY NOTIFICATION CENTER OF COLORADO (1-800-922-1987, WWW.UNCC.ORG).

6. THE CONTRACTOR SHALL BE SOLELY AND COMPLETELY RESPONSIBLE FOR CONDITIONS AT AND ADJACENT TO THE JOB SITE, INCLUDING SAFETY OF ALL PERSONS AND PROPERTY DURING THE PERFORMANCE OF THE WORK.

7. THE CONTRACTOR SHALL BE RESPONSIBLE FOR REMOVING ANY GROUNDWATER ENCOUNTERED DURING THE CONSTRUCTION OF ANY PORTION OF THIS PROJECT. GROUNDWATER SHALL BE PUMPED, PIPED, REMOVED AND DISPOSED OF IN A MANNER WHICH DOES NOT CAUSE FLOODING OF EXISTING STREETS NOR EROSION ON ABUTTING PROPERTIES IN ORDER TO CONSTRUCT THE IMPROVEMENTS SHOWN ON THESE PLANS. GROUNDWATER TO BE PUMPED SHALL BE TESTED, PERMITTED, AND PUMPED PER THE STATE OF COLORADO AND LOCAL GROUNDWATER DISCHARGING PERMIT REQUIREMENTS.

8. ELEVATIONS SHOWN ON PLANS ARE APPROXIMATE ONLY AND ARE NOT TO BE TAKEN AS FINAL ELEVATIONS. THE CONTRACTOR SHALL ADJUST IMPROVEMENTS TO MATCH FINAL PAVEMENT AND FINISHED GRADE ELEVATIONS.

9. THE EXISTING AND PROPOSED ELEVATIONS OF FLATWORK, SIDEWALKS, CURBS, THRESHOLDS, PAVING, ETC. AS SHOWN HEREON ARE BASED ON EXTRAPOLATION OF FIELD SURVEY DATA, EXISTING CONDITIONS, AND DATA PROVIDED BY OTHERS. AT CRITICAL AREAS AND SITE FEATURES, CONTRACTOR SHALL HAVE FORMWORK INSPECTED AND APPROVED BY CONTRACTING OFFICER PRIOR TO PLACING CONCRETE. MINOR ADJUSTMENTS, AS APPROVED, TO PROPOSED GRADES, INVERTS, ETC. MAY BE REQUIRED TO PREVENT PONDING OR SLOPE NOT IN CONFORMANCE WITH CDOT STANDARDS. ALL FLATWORK MUST PREVENT PONDING AND PROVIDE POSITIVE DRAINAGE AWAY FROM EXISTING AND PROPOSED BUILDINGS, WALLS, ROOF DRAIN OUTFALLS, ACROSS DRIVES AND WALKS, ETC., TOWARDS THE PROPOSED INTENDED DRAINAGE FEATURES AND CONVEYANCES.

10. FINAL LIMITS OF REQUIRED ASPHALT SAWCUTTING AND PATCHING MAY VARY FROM LIMITS SHOWN ON PLANS. CONTRACTOR TO PROVIDE SAWCUT AND PATCH WORK TO ACHIEVE POSITIVE DRAINAGE AND A SMOOTH TRANSITION TO EXISTING ASPHALT WITHIN SLOPES ACCEPTABLE TO THE CONTRACTING OFFICER AND WITHIN CDOT STANDARDS. CONTRACTOR SHALL PROVIDE ADDITIONAL SAWCUTTING AND PATCHING AT UTILITY WORK, CONNECTION POINTS TO EXISTING PAVEMENT AND FEATURES, ETC. THAT MAY NOT BE DELINEATED ON PLANS.

11. ANY EXISTING MONITORING WELLS, CLEANOUTS, VALVE BOXES, ETC. TO BE PROTECTED AND TO REMAIN IN SERVICE. IF FEATURES EXIST, EXTEND OR LOWER TO FINAL SURFACE WITH LIKE KIND CAP WITH STANDARD CAST ACCESS LID WITH SAME MARKINGS. IN LANDSCAPED AREAS PROVIDE A CONCRETE COLLAR (18"x18"x6" THICK) AT ALL EXISTING AND PROPOSED MONITORING WELLS, CLEANOUTS, VALVE BOXES, ETC.

12. GOVERNMENT TO APPROVE ALL PRIVATE CONCRETE FINISHING, JOINT PATTERNS AND COLORING REQUIREMENTS PRIOR TO CONSTRUCTION. SUBMIT JOINT LAYOUT PLAN TO GOVERNMENT FOR APPROVAL PRIOR TO CONSTRUCTION.

13. PIPE LENGTHS AND HORIZONTAL CONTROL POINTS SHOWN ARE FROM CENTER OF STRUCTURES, END OF FLARED END SECTIONS, ETC. SEE STRUCTURE DETAILS FOR EXACT HORIZONTAL CONTROL LOCATION. CONTRACTOR IS RESPONSIBLE FOR ADJUSTING ACTUAL PIPE LENGTHS TO ACCOUNT FOR STRUCTURES AND LENGTH OF FLARED END SECTIONS.

14. ALL SURPLUS MATERIALS, TOOLS, AND TEMPORARY STRUCTURES, FURNISHED BY THE CONTRACTOR, SHALL BE REMOVED FROM THE PROJECT SITE BY THE CONTRACTOR. ALL DEBRIS AND RUBBISH CAUSED BY THE OPERATIONS OF THE CONTRACTOR SHALL BE REMOVED, AND THE AREA OCCUPIED DURING CONSTRUCTION ACTIVITIES SHALL BE RESTORED TO ITS ORIGINAL CONDITION, WITHIN 48 HOURS OF PROJECT COMPLETION, UNLESS OTHERWISE DIRECTED BY THE GOVERNMENT.

15. THE CONTRACTOR IS REQUIRED TO PROVIDE AND MAINTAIN EROSION AND SEDIMENT CONTROL MEASURES IN ACCORDANCE WITH THE LOCAL JURISDICTION, THE STATE OF COLORADO, MILE HIGH FLOOD DISTRICT "URBAN STORM DRAINAGE CRITERIA MANUAL VOLUME 3", THE M-STANDARD PLANS OF THE COLORADO DEPARTMENT OF TRANSPORTATION, AND THE APPROVED EROSION CONTROL PLAN. THE CONTRACTOR IS RESPONSIBLE FOR PROHIBITING SILT AND DEBRIS LADEN RUNOFF FROM LEAVING THE SITE, AND FOR KEEPING ALL PUBLIC AREAS FREE OF MUD AND DEBRIS. THE CONTRACTOR IS RESPONSIBLE FOR RE-ESTABLISHING FINAL GRADES AND FOR REMOVING ACCUMULATED SEDIMENTATION FROM ALL AREAS INCLUDING SWALES AND DETENTION/WATER QUALITY AREAS. CONTRACTOR SHALL REMOVE TEMPORARY EROSION CONTROL MEASURES AND REPAIR AREAS AS REQUIRED AFTER VEGETATION IS ESTABLISHED AND ACCEPTED BY GOVERNMENT.

16. LOCATIONS OF CLEANOUTS, LIGHTS, SIGNAGE, JUNCTION BOXES, AND OTHER SIGNIFICANT SITE FEATURES TO BE STAKED FOR CONTRACTING OFFICER AND OR GOVERNMENT APPROVAL PRIOR TO WORK. CLEANOUTS, JUNCTION BOXES, AND ADJACENT GRADES TO BE RAISED ONE-HALF INCH AT ASPHALT/CONCRETE (OR 1" AT LANDSCAPING) TO PROVIDE POSITIVE DRAINAGE AWAY FROM FEATURES.

CONTROL POINTS

CP #	CP NAME	NORTHING	EASTING
LAKE GEORGE WORK CENTER			
1	CLEANOUT 2	1417323.6	30441557.0
2	CLEANOUT 5	1417399.3	3041578.4
3	REPLACEMENT 2000 GAL TANK	1417487.4	3041599.0
MONUMENT FIRE CENTER			
4	CLEANOUT 1	1456596.8	3168795.8
5	CLEANOUT 2	1456521.0	3168841.4
6	EXISTING MANHOLE	1456471.0	3168873.5
7	FIRE HYDRANT	1456495.6	3168972.2
8	FROST PROOF HYDRANT	1456418.6	3168993.4
FAIRPLAY WORK CENTER			
9	WATERLINE REPLACEMENT	1508325.5	2856857.7
10	SHOP BUILDING ENTRANCE	1508484.5	2856836.5
AG RANCH WORK CENTER			
11	BUNK HOUSE SEPTIC TANK	1578557.7	2982035.9
12	OFFICE SEPTIC TANK	1578209.8	2982337.1

NAD83 COLORADO STATE PLANES, CENTRAL ZONE, US FOOT- FOR LOCAL REFERENCE ONLY

ABBREVIATIONS:
1. OC- ON CENTER
2. SDR- STANDARD DIMENSION RATIO
3. CONC- CONCRETE
4. MFC- MONUMENT FIRE CENTER
5. LG- LAKE GEORGE
6. FT- FOOT
7. HDPE- HIGH-DENSITY POLYETHYLENE
8. PVC- POLYVINYL CHLORIDE

UNITED STATES DEPARTMENT OF AGRICULTURE

FOREST SERVICE

R2
ROCKY MOUNTAIN REGION

STAMPS, LOGOS, AND SEALS

NO.	REVISION / ISSUE	DATE
3		
2		
1		

PROJECT NAME

PIKE UNDERGROUND UTILITIES UPGRADE

PIKE-SAN ISABEL NATIONAL FORESTS & CIMARRON AND COMANCHE NATIONAL GRASSLANDS

DRAWING TITLE

GENERAL NOTES

ARCHIVE NO.

DESIGNER C.HOGENAUER
CHECKED P. KRIEBLE
DATE 05/01/2026
SUB SHEET NO. T1.2
SHEET 02 OF 14

4/29/26 09:57 CHARLESHOGENAUER C:\USERS\CHARLESHOGENAUER\BOX\7300BUILDINGS&STRUCTURES\7310_BUILDING&FACILITIES\10_SOUTHPARKLAKE_GEORGE_WC_10005\WC SITE & UTILS\LOWER SEPTIC\PUUU CONTRACT\DESIGN\CAD\FS CAD - TITLE SHEET-PUUU.DWG;

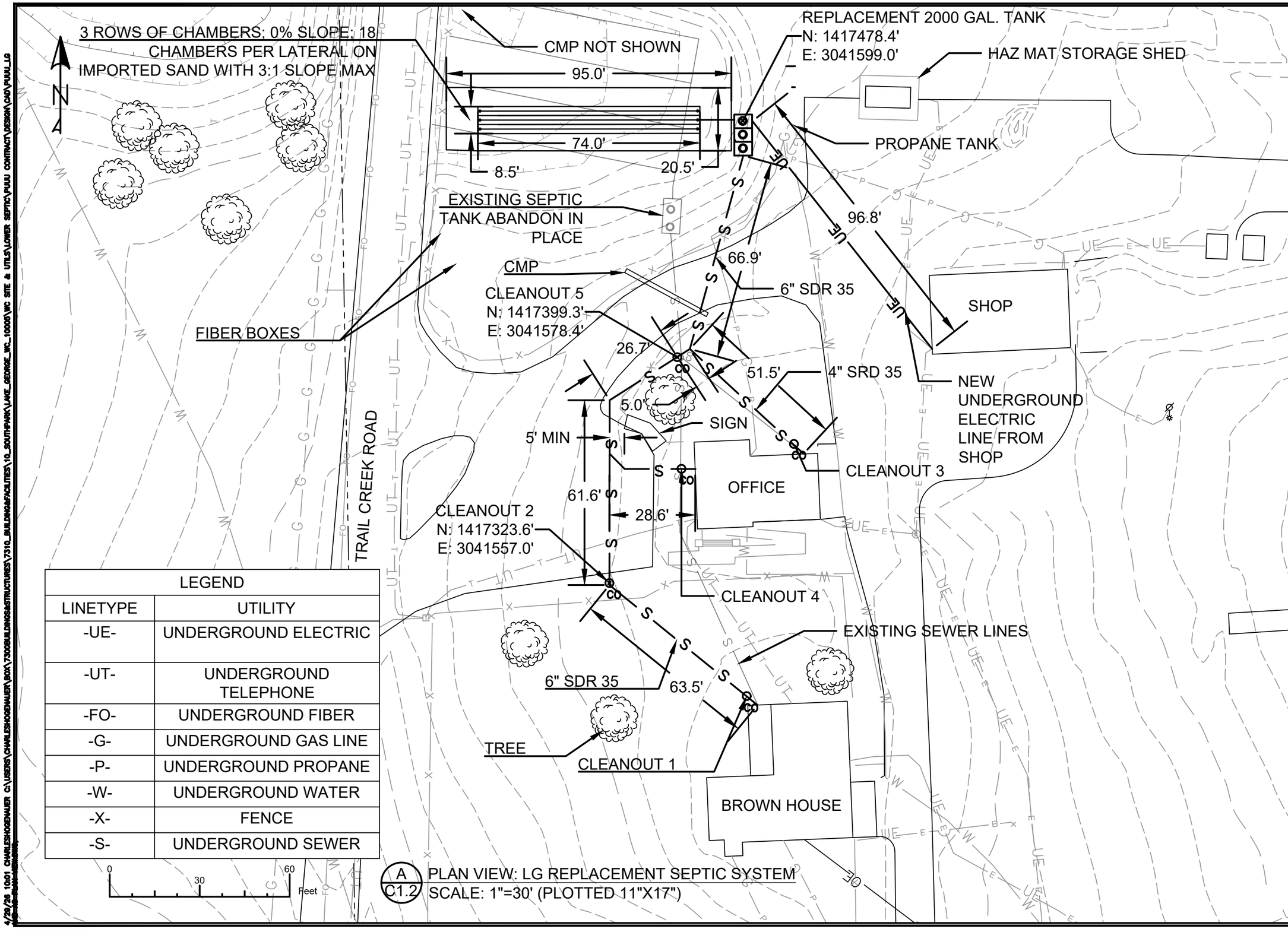

LEGEND	
LINETYPE	UTILITY
-UE-	UNDERGROUND ELECTRIC
-UT-	UNDERGROUND TELEPHONE
-FO-	UNDERGROUND FIBER
-G-	UNDERGROUND GAS LINE
-P-	UNDERGROUND PROPANE
-W-	UNDERGROUND WATER
-X-	FENCE
-S-	UNDERGROUND SEWER

A / C1.2 PLAN VIEW: LG REPLACEMENT SEPTIC SYSTEM
SCALE: 1"=30' (PLOTTED 11"X17")

USDA FOREST SERVICE

UNITED STATES DEPARTMENT OF AGRICULTURE

FOREST SERVICE

R2
ROCKY MOUNTAIN REGION

STAMPS, LOGOS, AND SEALS

NO.	REVISION / ISSUE	DATE
3		
2		
1		

PROJECT NAME

PIKE UNDERGROUND UTILITIES UPGRADE

PIKE-SAN ISABEL NATIONAL FORESTS & CIMARRON AND COMANCHE NATIONAL GRASSLANDS

DRAWING TITLE

LAKE GEORGE SITE PLAN: REPLACEMENT SEWERLINES

ARCHIVE NO.

DESIGNER C.HOGENAUER
CHECKED P. KRIEBLE
DATE 05/1/2026
SUB SHEET NO. C1.1
SHEET 03 OF 14

4/29/26 10:01 CHARLESHOGENAUER C:\USERS\CHARLESHOGENAUER\DOX\73000\BUILDINGS&STRUCTURES\7310_BUILDINGS&FACILITIES\10_SOUTHPARK\LAKE_GEORGE_WC_10000\WC SITE & UTILS\LOWER SEPTIC\PUUU CONTRACT\DESIGN\CAD\PUUU_LG

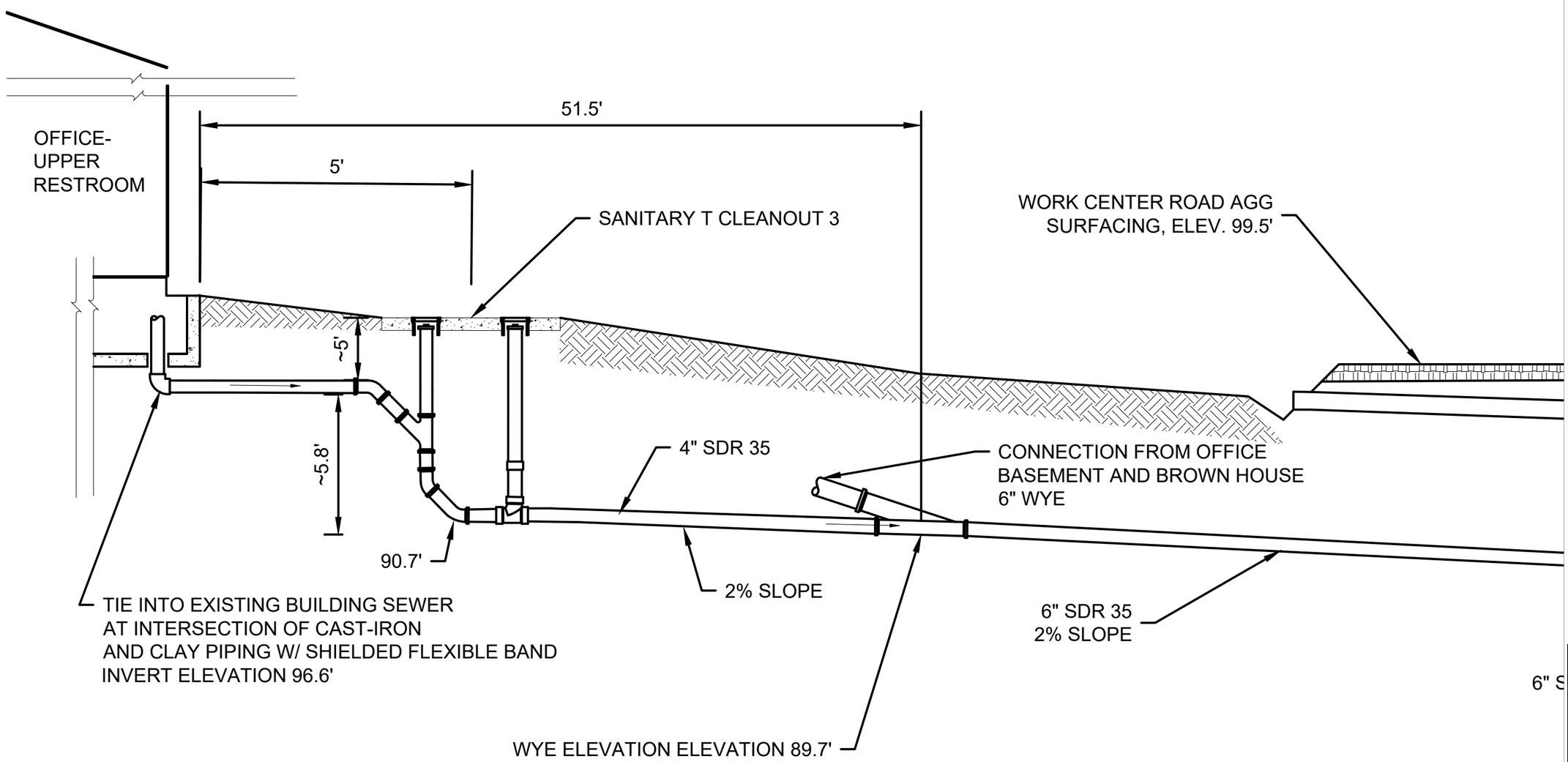

A / C1.3 SECTION DETAIL: LG OFFICE SEWER LINE
NO SCALE

UNITED STATES
DEPARTMENT OF AGRICULTURE

FOREST SERVICE

R2
ROCKY MOUNTAIN
REGION

STAMPS, LOGOS, AND SEALS

NO.	REVISION / ISSUE	DATE
3		
2		
1		

PROJECT NAME

PIKE
UNDERGROUND
UTILITIES
UPGRADE

PIKE-SAN ISABEL
NATIONAL FORESTS &
CIMARRON AND
COMANCHE NATIONAL
GRASSLANDS

DRAWING TITLE

SECTION DETAIL:
LG OFFICE
SEWER LINES

ARCHIVE NO.

DESIGNER
C.HOGENAUER

CHECKED
P. KRIEBLE

DATE
05/01/2026

SUB SHEET NO.
C1.2

SHEET
04 OF 14

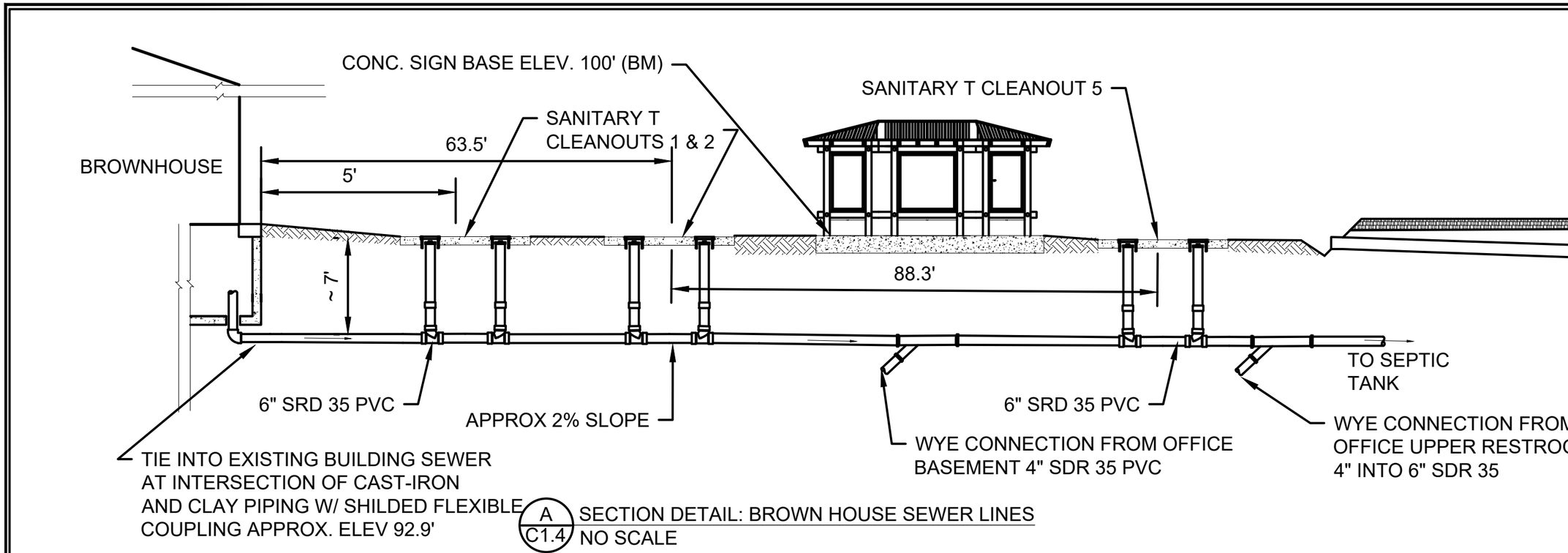

A / C1.4 SECTION DETAIL: BROWN HOUSE SEWER LINES
NO SCALE

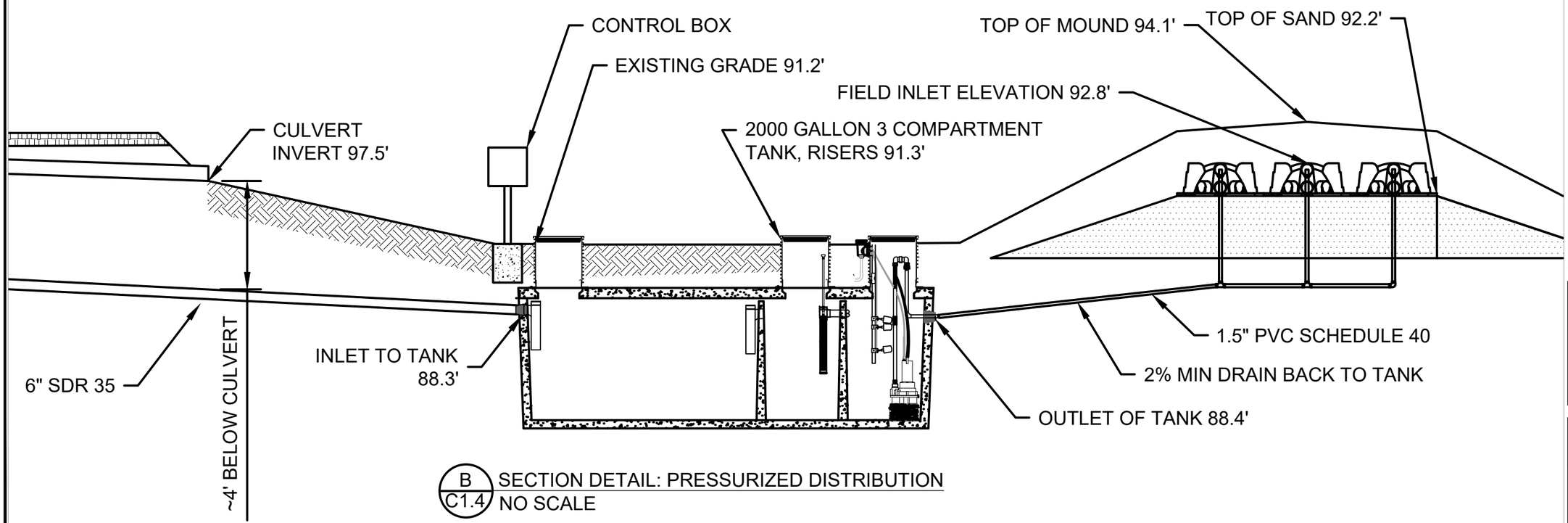

B / C1.4 SECTION DETAIL: PRESSURIZED DISTRIBUTION
NO SCALE

UNITED STATES DEPARTMENT OF AGRICULTURE

FOREST SERVICE

R2
ROCKY MOUNTAIN REGION

STAMPS, LOGOS, AND SEALS

NO.	REVISION / ISSUE	DATE
3		
2		
1		

PROJECT NAME

PIKE UNDERGROUND UTILITIES UPGRADE

PIKE-SAN ISABEL NATIONAL FORESTS & CIMARRON AND COMANCHE NATIONAL GRASSLANDS

DRAWING TITLE

SECTION DETAIL: LG SEPTIC SYSTEM

ARCHIVE NO.

DESIGNER C.HOGENAUER
CHECKED P. KRIEBLE
DATE 05/01/2026
SUB SHEET NO. C1.3
SHEET 05 OF 14

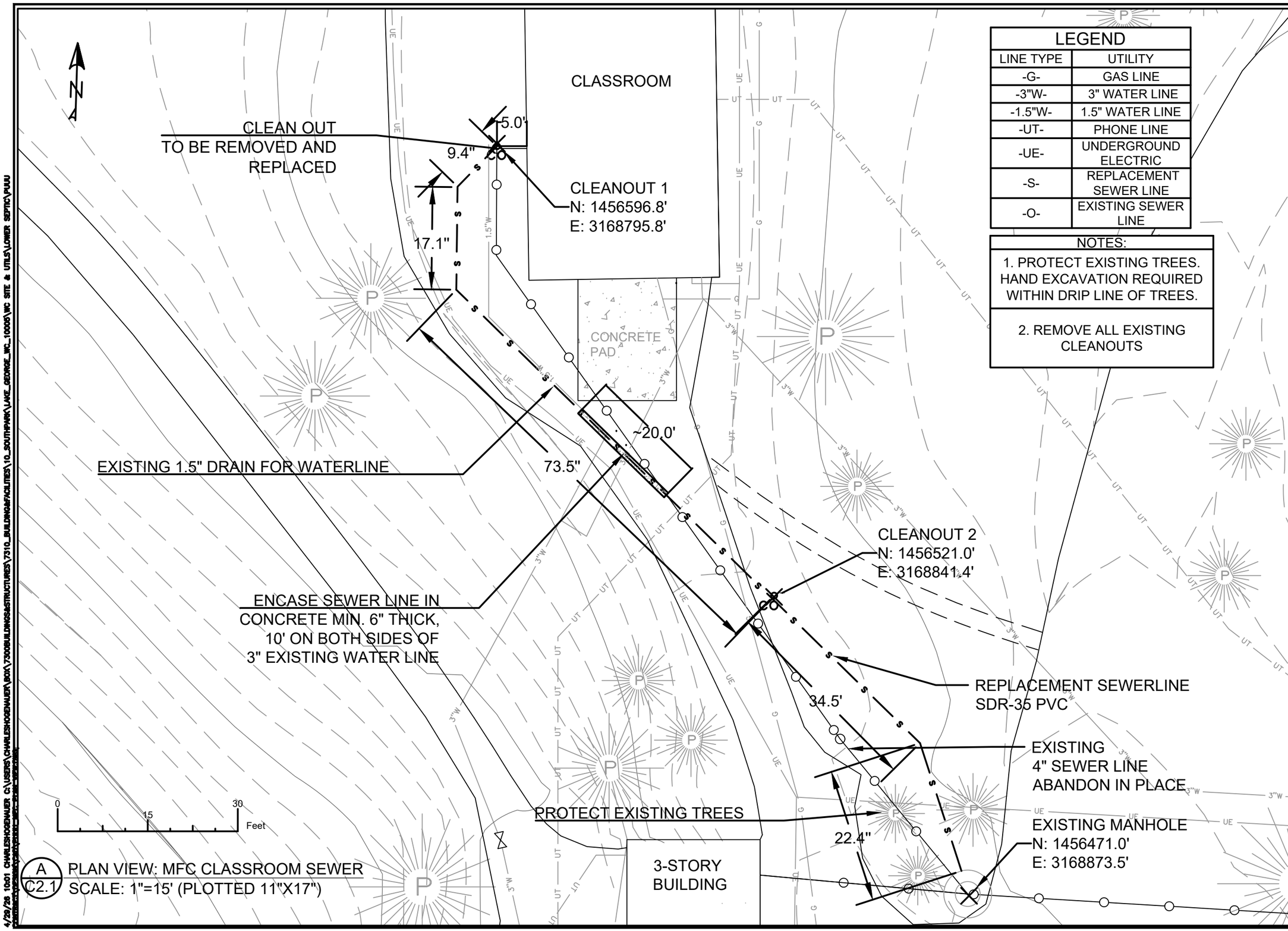

LEGEND	
LINE TYPE	UTILITY
-G-	GAS LINE
-3"W-	3" WATER LINE
-1.5"W-	1.5" WATER LINE
-UT-	PHONE LINE
-UE-	UNDERGROUND ELECTRIC
-S-	REPLACEMENT SEWER LINE
-O-	EXISTING SEWER LINE

NOTES:

1. PROTECT EXISTING TREES. HAND EXCAVATION REQUIRED WITHIN DRIP LINE OF TREES.
2. REMOVE ALL EXISTING CLEANOUTS

UNITED STATES
DEPARTMENT OF AGRICULTURE

FOREST SERVICE

R2
ROCKY MOUNTAIN
REGION

STAMPS, LOGOS, AND SEALS

NO.	REVISION / ISSUE	DATE
3		
2		
1		

PROJECT NAME

PIKE
UNDERGROUND
UTILITIES
UPGRADE

PIKE-SAN ISABEL
NATIONAL FORESTS &
CIMARRON AND
COMANCHE NATIONAL
GRASSLANDS

DRAWING TITLE

MFC SITE PLAN:
REPLACEMENT
SEWER LINES

ARCHIVE NO.

DESIGNER
C.HOGENAUER
CHECKED
P. KRIEBLE
DATE
05/01/2026

SUB SHEET NO.
C2.1

SHEET
06 OF 14

4/29/26 10:01 CHARLESHOGENAUER C:\USERS\CHARLESHOGENAUER\BOX\7300BUILDINGSASTRUCTURES\7310_BUILDINGSFACILITIES\10_SOUTHPARK\LAKE_GEORGE_WC_10005\WC SITE & UTILS\LOWER SEPTIC\PUUU

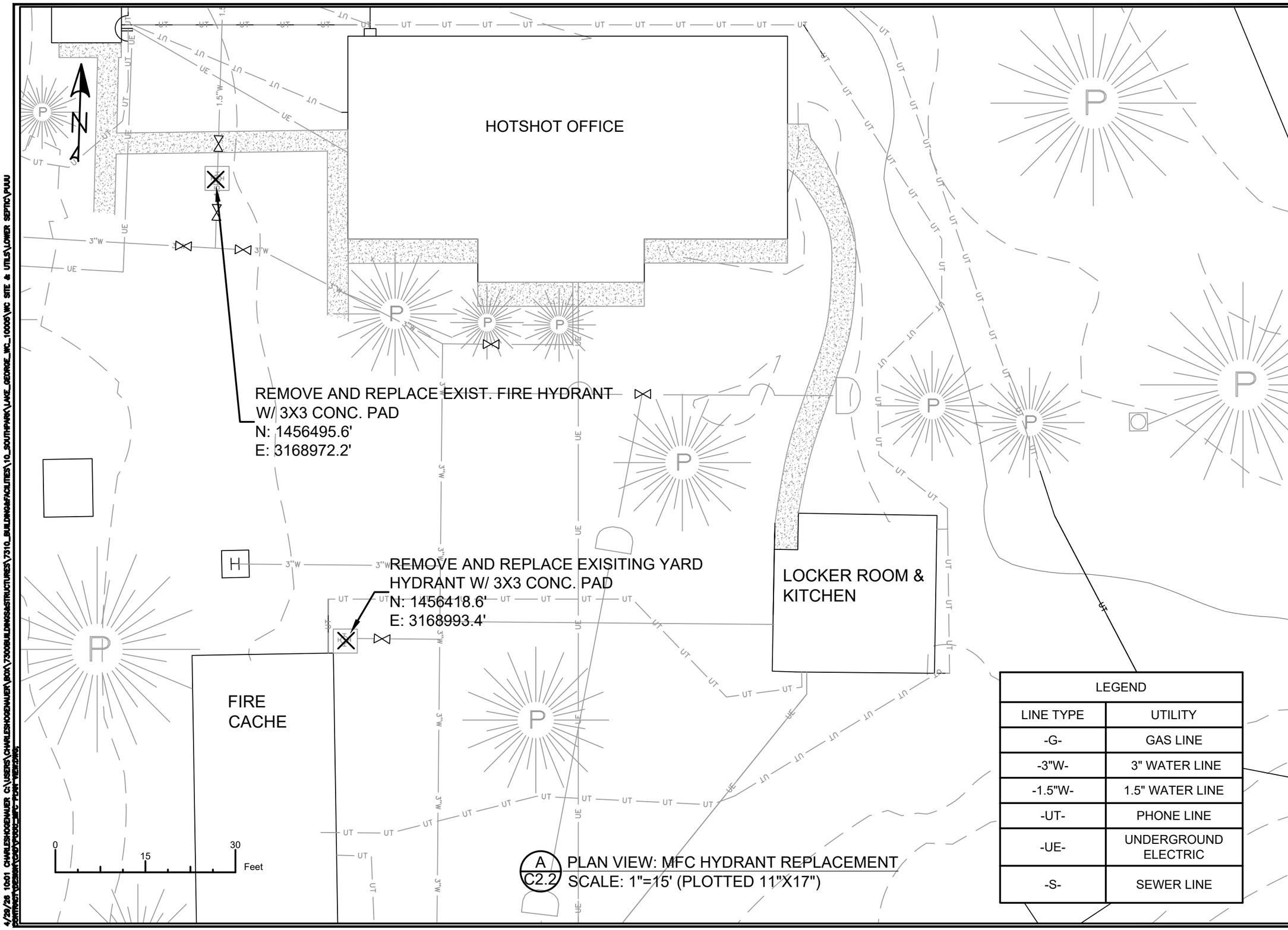

A
C2.2
PLAN VIEW: MFC HYDRANT REPLACEMENT
SCALE: 1"=15' (PLOTTED 11"X17")

LEGEND	
LINE TYPE	UTILITY
-G-	GAS LINE
-3"W-	3" WATER LINE
-1.5"W-	1.5" WATER LINE
-UT-	PHONE LINE
-UE-	UNDERGROUND ELECTRIC
-S-	SEWER LINE

USDA

UNITED STATES
DEPARTMENT OF AGRICULTURE

FOREST SERVICE

R2
ROCKY MOUNTAIN
REGION

STAMPS, LOGOS, AND SEALS

NO.	REVISION / ISSUE	DATE
3		
2		
1		

PROJECT NAME

PIKE
UNDERGROUND
UTILITIES
UPGRADE

PIKE-SAN ISABEL
NATIONAL FORESTS &
CIMARRON AND
COMANCHE NATIONAL
GRASSLANDS

DRAWING TITLE

MFC SITE PLAN:
REPLACEMENT
HYDRANT

ARCHIVE NO.

DESIGNER
C.HOGENAUER

CHECKED
P. KRIEBLE

DATE
05/01/2026

SUB SHEET NO.
C2.2

SHEET
07 OF 14

4/29/26 10:01 CHARLESHOGENAUER C:\USERS\CHARLESHOGENAUER\BOX\7300BUILDINGS&STRUCTURES\7310_BUILDINGS&FACILITIES\10_SOUTHPARK\LAKE_GEORGE_WC_10005\WC SITE & UTILS\LOWER SEPTIC\PLUU
CONTRACT\DESIGN\CAD\2000_MFC PLAN VERSIONS

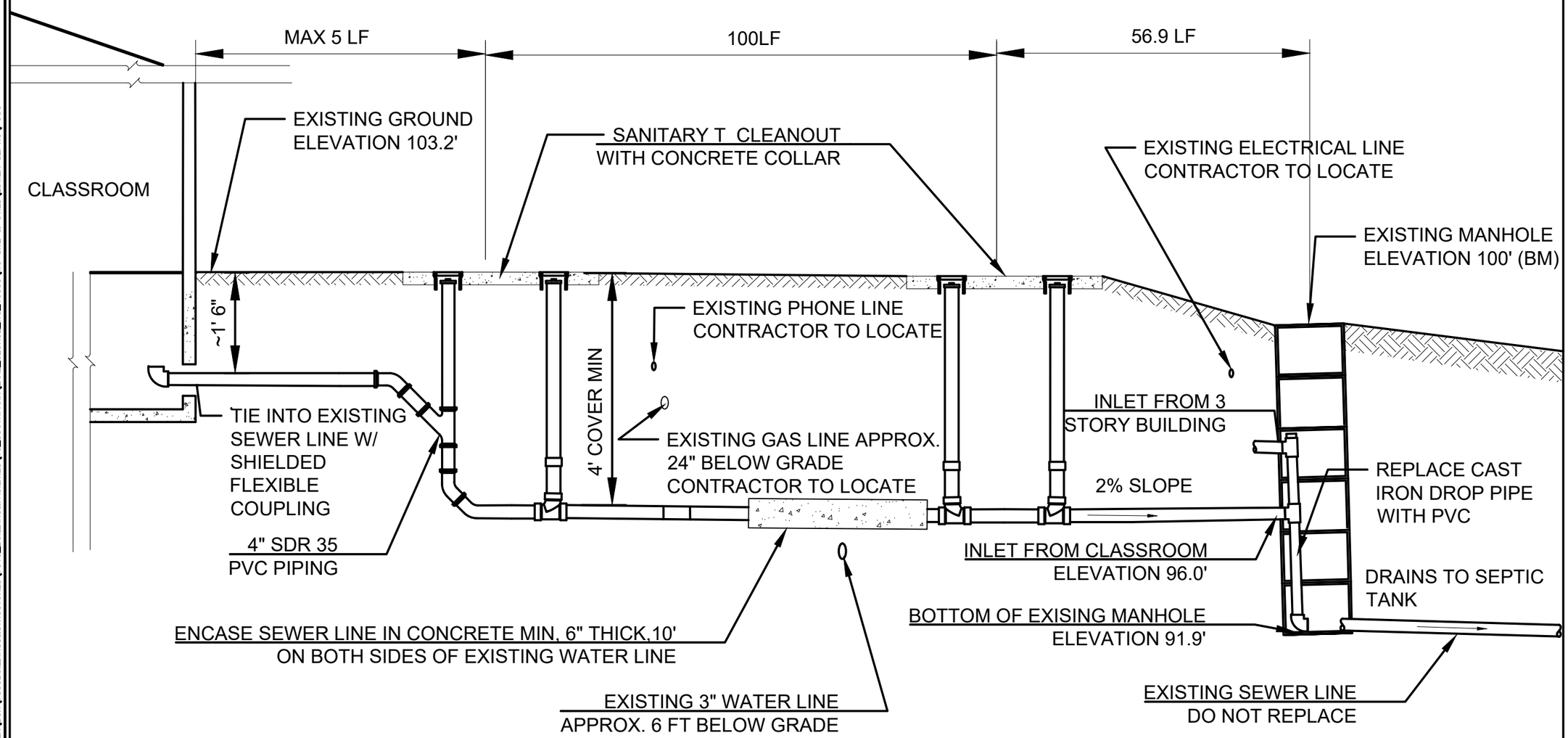

A / C2.3 SECTION DETAIL: CLASSROOM SEWER LINES
NO SCALE

UNITED STATES DEPARTMENT OF AGRICULTURE

FOREST SERVICE

R2
ROCKY MOUNTAIN REGION

STAMPS, LOGOS, AND SEALS

NO.	REVISION / ISSUE	DATE
3		
2		
1		

PROJECT NAME

PIKE UNDERGROUND UTILITIES UPGRADE

PIKE-SAN ISABEL NATIONAL FORESTS & CIMARRON AND COMANCHE NATIONAL GRASSLANDS

DRAWING TITLE

SECTION DETAIL: MFC CLASSROOM SEWERLINES

ARCHIVE NO.

DESIGNER C.HOGENAUER
CHECKED P. KRIEBLE
DATE 05/01/2026
SUB SHEET NO. C2.3
SHEET 08 OF 14

4/29/26 10:01 CHARLESHOGENAUER C:\USFS\CHARLESHOGENAUER\BOX\7300BUILDINGS&STRUCTURES\7310_BUILDINGS&FACILITIES\10_SOUTHPARK\LAKE_GEORGE_WC_10005\WC SITE & UTILS\LOWER SEPTIC\PUUU

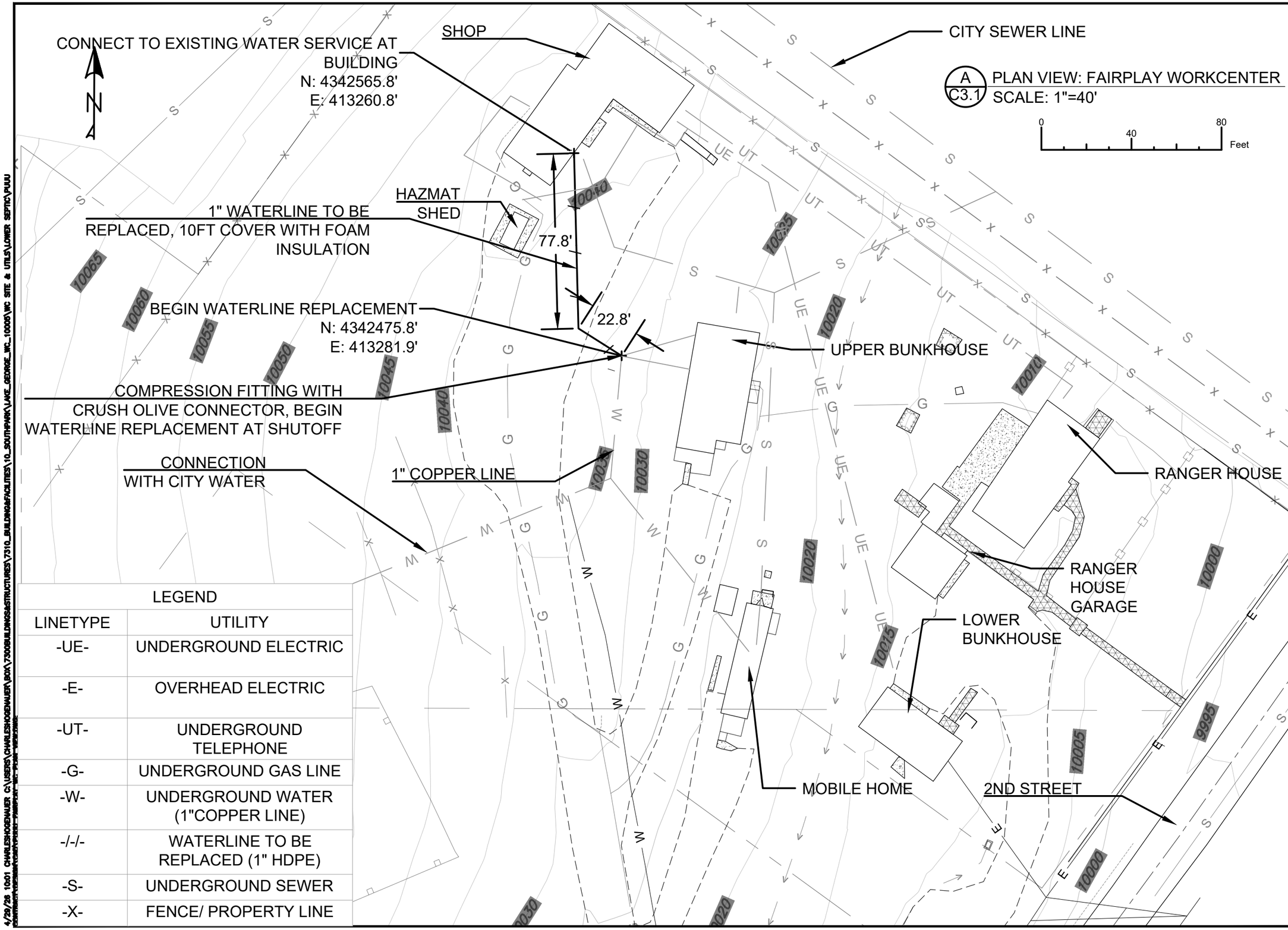

LEGEND	
LINETYPE	UTILITY
-UE-	UNDERGROUND ELECTRIC
-E-	OVERHEAD ELECTRIC
-UT-	UNDERGROUND TELEPHONE
-G-	UNDERGROUND GAS LINE
-W-	UNDERGROUND WATER (1"COPPER LINE)
-/-/-	WATERLINE TO BE REPLACED (1" HDPE)
-S-	UNDERGROUND SEWER
-X-	FENCE/ PROPERTY LINE

UNITED STATES DEPARTMENT OF AGRICULTURE

FOREST SERVICE

R2
ROCKY MOUNTAIN REGION

STAMPS, LOGOS, AND SEALS

NO.	REVISION / ISSUE	DATE
3		
2		
1		

PROJECT NAME

PIKE UNDERGROUND UTILITIES UPGRADE

PIKE-SAN ISABEL NATIONAL FORESTS & CIMARRON AND COMANCHE NATIONAL GRASSLANDS

DRAWING TITLE

FAIRPLAY WC SITE PLAN: WATERLINE REPLACEMENT

ARCHIVE NO.

DESIGNER C.HOGENAUER

CHECKED P. KRIEBLE

DATE 05/01/2026

SUB SHEET NO. C3.1

SHEET 09 OF 14

4/29/26 10:01 CHARLESHOGENAUER C:\USERS\CHARLESHOGENAUER\BOX\7300BUILDINGS&STRUCTURES\7310_BUILDINGS&FACILITIES\10_SOUTHPARK\LAKE_GEORGE_WC_10005\WC SITE & UTILS\LOWER SEPTIC\PLUU

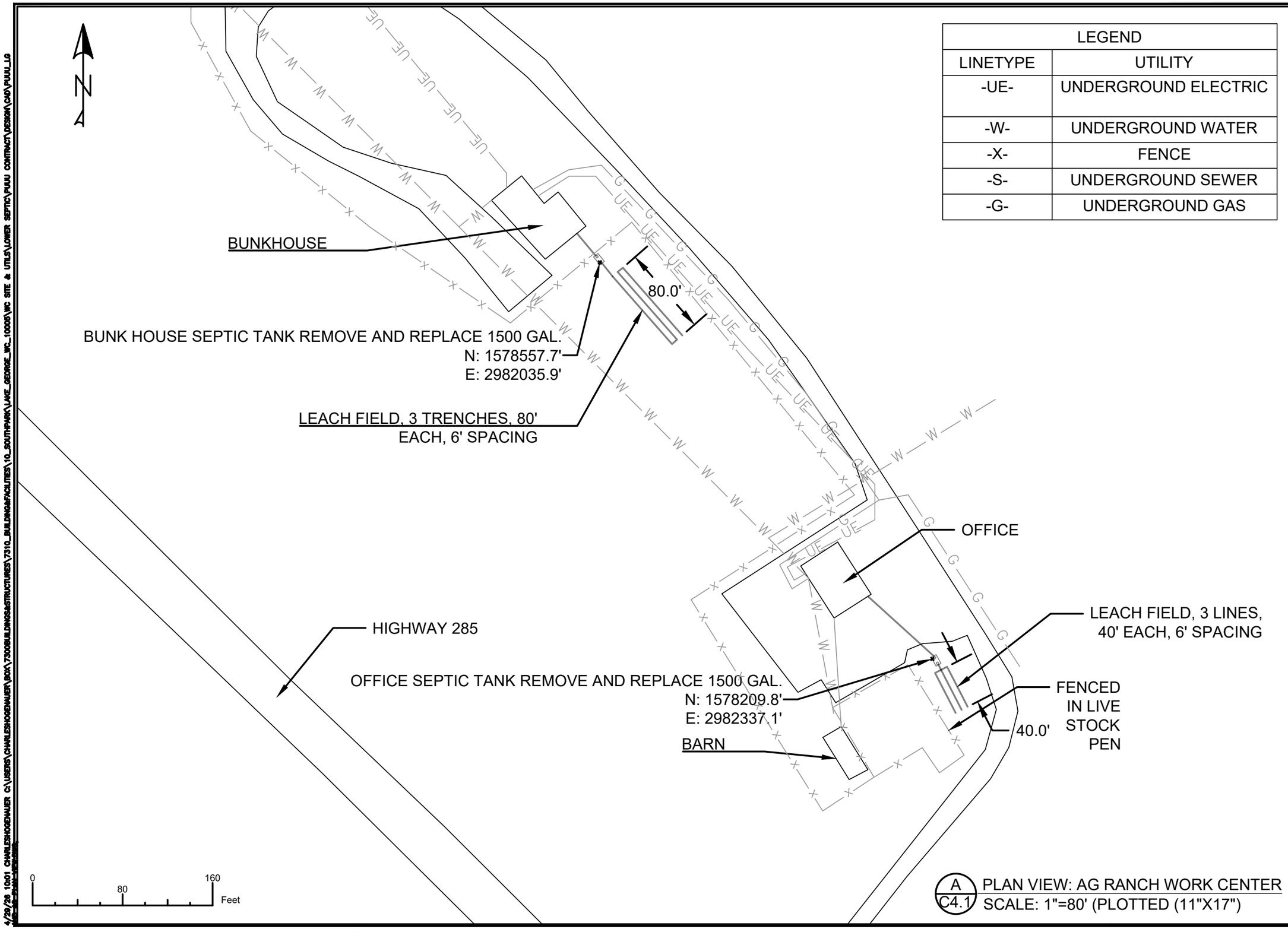

LEGEND	
LINETYPE	UTILITY
-UE-	UNDERGROUND ELECTRIC
-W-	UNDERGROUND WATER
-X-	FENCE
-S-	UNDERGROUND SEWER
-G-	UNDERGROUND GAS

A / C4.1 PLAN VIEW: AG RANCH WORK CENTER
SCALE: 1"=80' (PLOTTED (11"X17")

USDA FOREST SERVICE

UNITED STATES
DEPARTMENT OF AGRICULTURE

FOREST SERVICE

R2
ROCKY MOUNTAIN
REGION

STAMPS, LOGOS, AND SEALS

NO.	REVISION / ISSUE	DATE
3		
2		
1		

PROJECT NAME

PIKE
UNDERGROUND
UTILITIES
UPGRADE

PIKE-SAN ISABEL
NATIONAL FORESTS &
CIMARRON AND
COMANCHE NATIONAL
GRASSLANDS

DRAWING TITLE

AG RANCH WC SITE
PLAN: SEPTIC TANK
REPLACEMENT

ARCHIVE NO.

DESIGNER
C.HOGENAUER

CHECKED
P. KRIEBLE

DATE
05/1/2026

SUB SHEET NO.
C4.1

SHEET
10 OF 14

4/29/26 10:01 CHARLESHOGENAUER C:\USERS\CHARLESHOGENAUER\BOX\7300BUILDINGS&STRUCTURES\7310_BUILDINGS&FACILITIES\10_SOUTHPARK\LAKE_GEORGE_WC_10005\WC SITE & UTILS\LOWER SEPTIC\PUUU CONTRACT\DESIGN\CAD\PUUU_LG

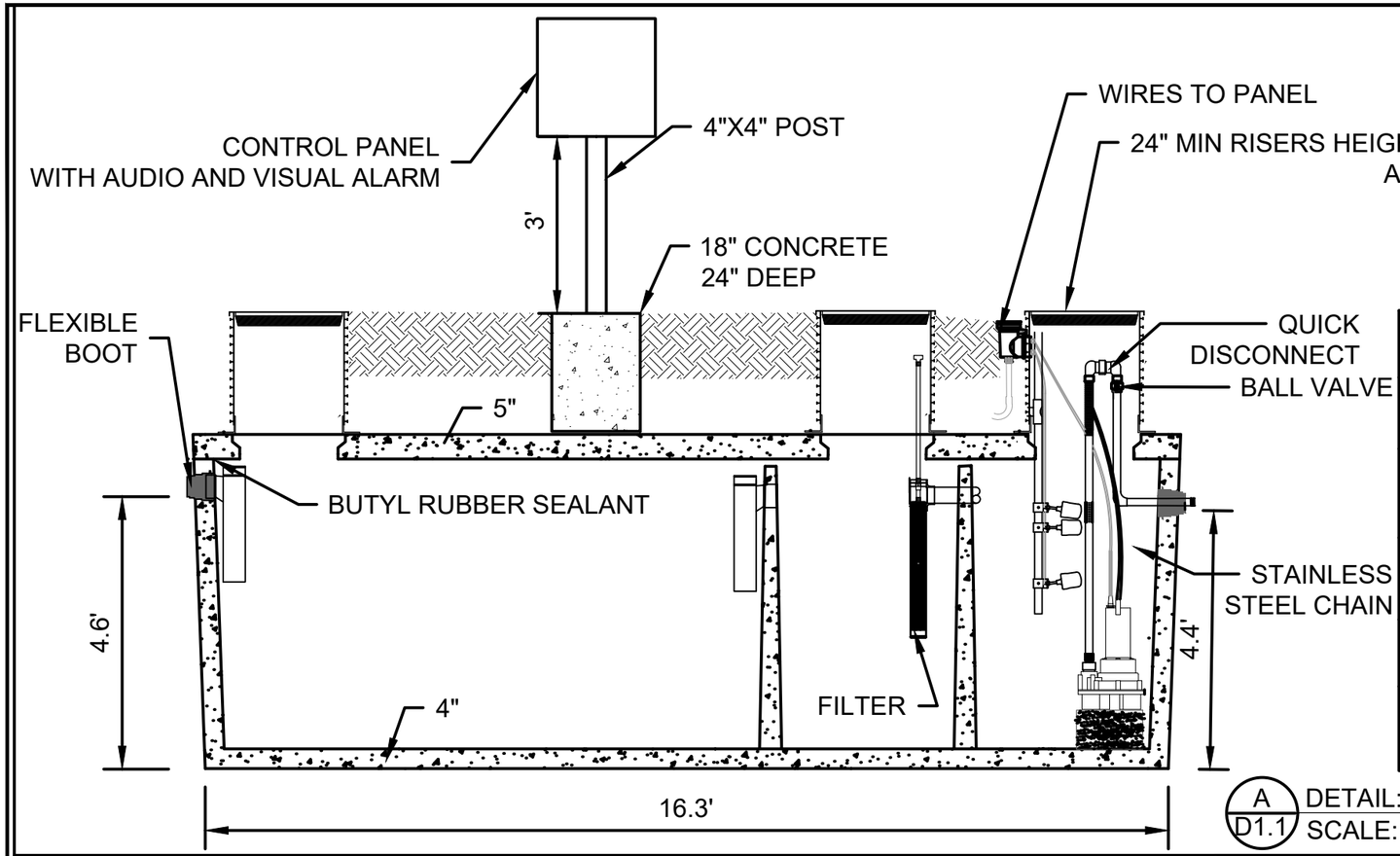

SYSTEM DETAILS	
PUMP DISCHARGE (GPM)	39
PUMP HEAD (FT)	18.4
VOLUME OF TANK (GAL)	2000 (2500 TOTAL)
FILTER SIZE	1/8 INCH
DISCHARGE VOLUME (GAL)	40

A / D1.1 DETAIL: 3 COMPATMENT PUMP TANK
SCALE: 1"=2.5' (PLOTTED 11"X17")

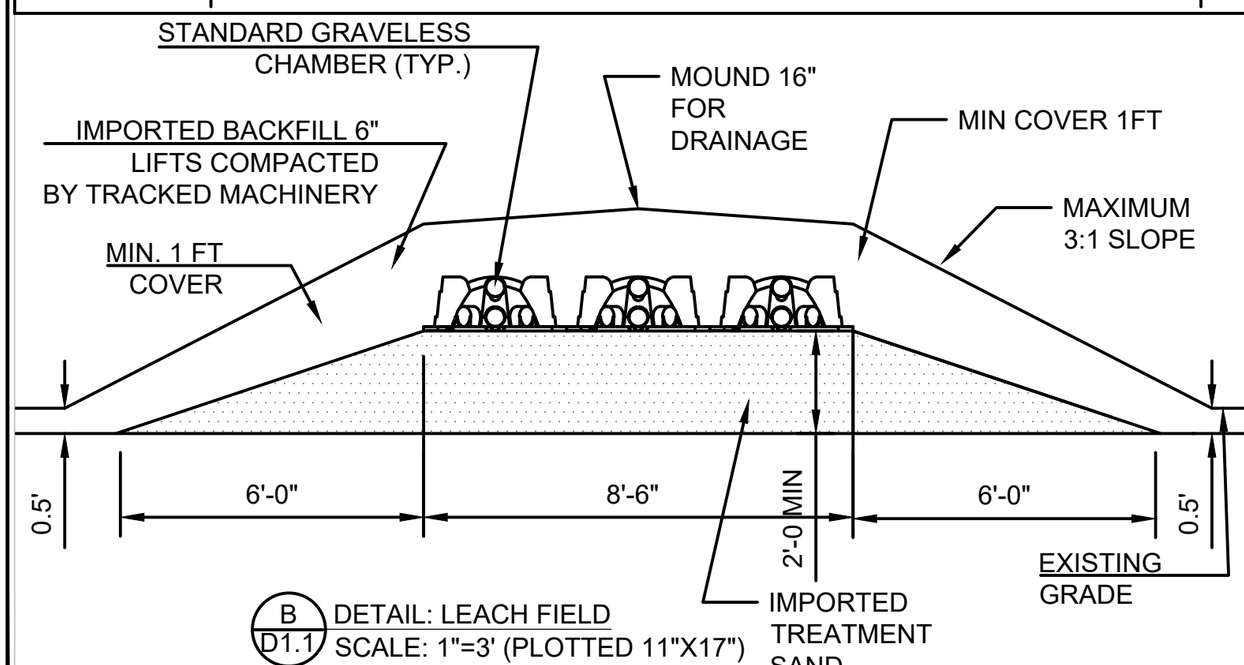

B / D1.1 DETAIL: LEACH FIELD
SCALE: 1"=3' (PLOTTED 11"X17")

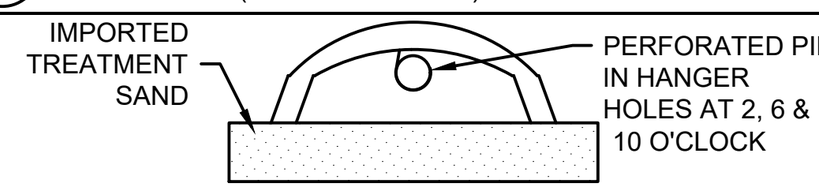

PRESSURIZED DISTRIBUTION DETAIL	
COMPONENT	
DIAMETER OF DISTRIBUTION PIPE	1.5 INCHES
DIAMETER OF PERFORATIONS	1/8 INCH
SPACING OF PERFORATIONS	2.5 FT OC
PERFORATIONS PER LATERAL	31
CHAMBERS PER LATERAL	18

C / D1.1 DETAIL: CHAMBERS
NO SCALE

UNITED STATES
DEPARTMENT OF AGRICULTURE

FOREST SERVICE

R2
ROCKY MOUNTAIN
REGION

STAMPS, LOGOS, AND SEALS

NO.	REVISION / ISSUE	DATE
3		
2		
1		

PROJECT NAME

PIKE
UNDERGROUND
UTILITIES
UPGRADE

PIKE-SAN ISABEL
NATIONAL FORESTS &
CIMARRON AND
COMANCHE NATIONAL
GRASSLANDS

DRAWING TITLE

DETAILS: LAKE GEORGE
SEPTIC

ARCHIVE NO.

DESIGNER
C.HOGENAUER

CHECKED
P. KRIEBLE

DATE
05/01/2026

SUB SHEET NO.
D1.1

SHEET
11 OF 14

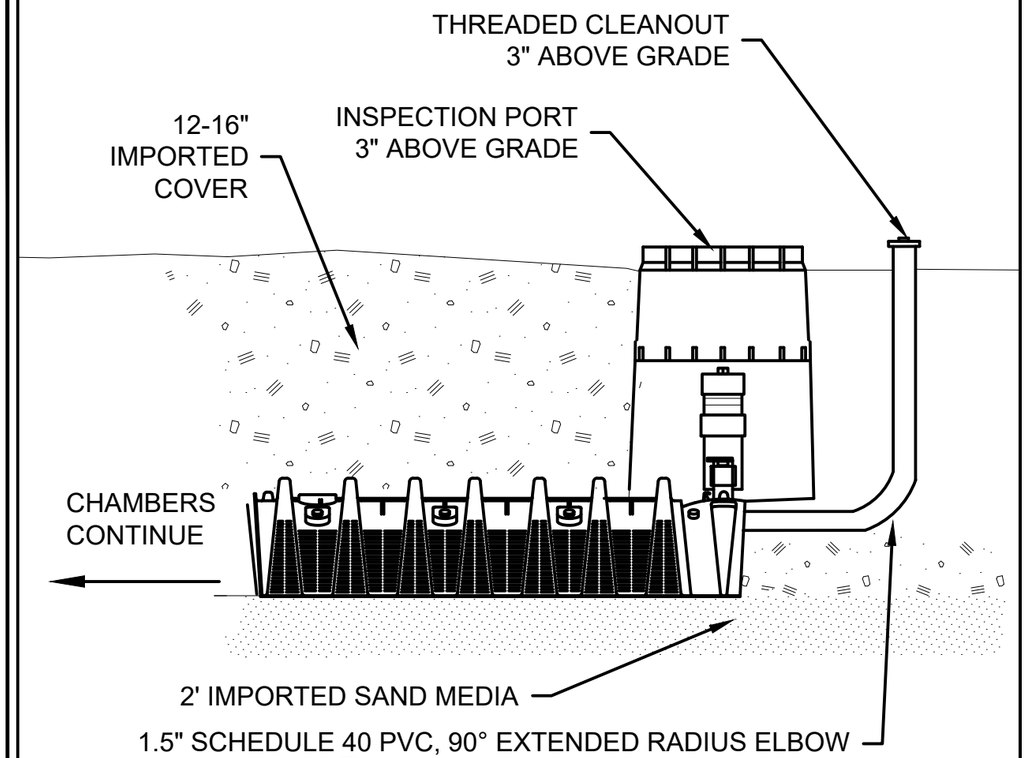

A / D1.2 DETAIL: FIELD CLEANOUT
NO SCALE

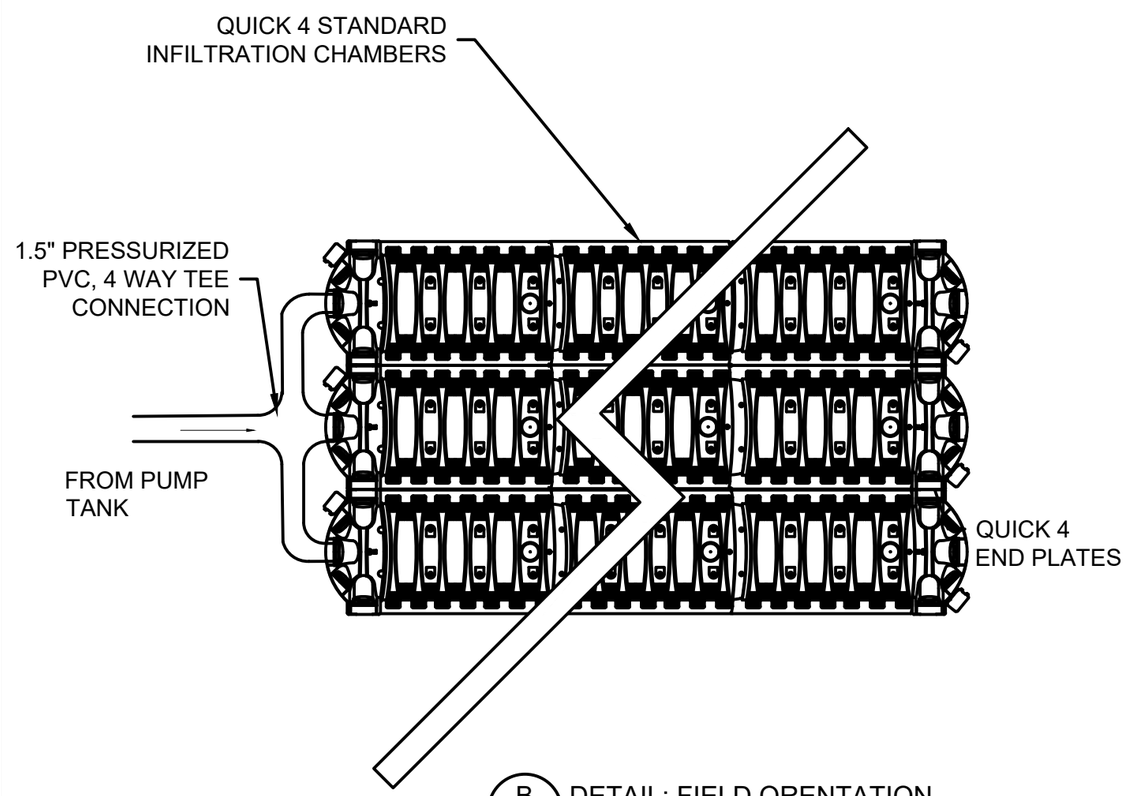

B / D1.2 DETAIL: FIELD ORENTATION
NO SCALE

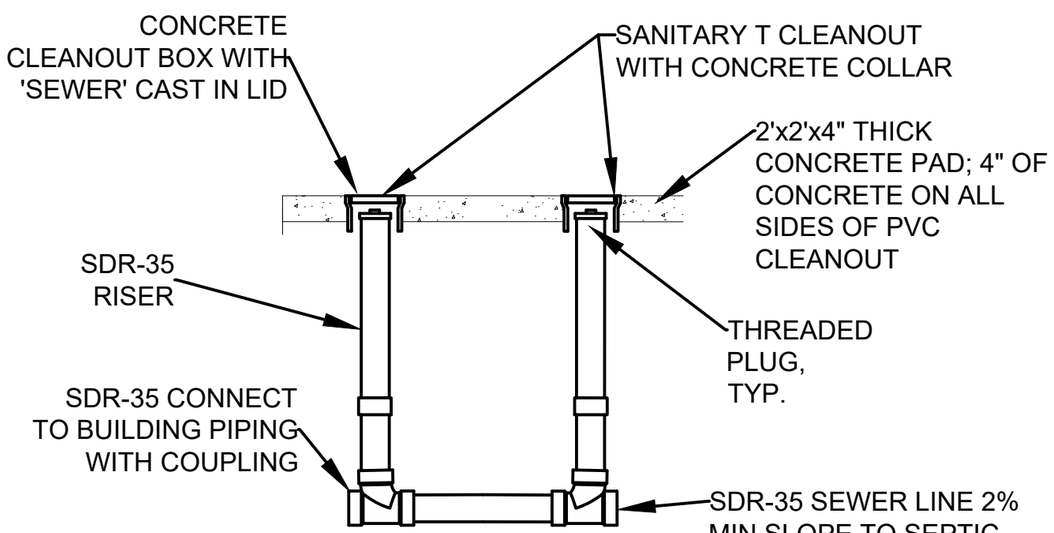

C / D1.2 DETAIL: CLEANOUT
NO SCALE

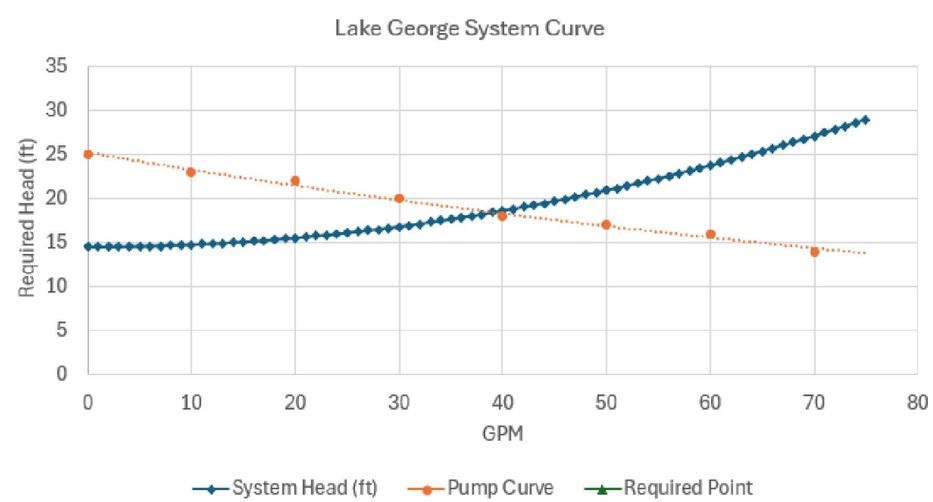

D / D1.2 SYSTEM CURVE
NO SCALE

USDA FOREST SERVICE

UNITED STATES
DEPARTMENT OF AGRICULTURE

FOREST SERVICE

R2
ROCKY MOUNTAIN
REGION

STAMPS, LOGOS, AND SEALS

NO.	REVISION / ISSUE	DATE
3		
2		
1		

PROJECT NAME

PIKE UNDERGROUND UTILITIES UPGRADE

PIKE-SAN ISABEL NATIONAL FORESTS & CIMARRON AND COMANCHE NATIONAL GRASSLANDS

DRAWING TITLE

DETAILS: LAKE GEORGE SEPTIC 2

ARCHIVE NO.

DESIGNER C.HOGENAUER
CHECKED P. KRIEBLE
DATE 05/01/2026

SUB SHEET NO. D1.2

SHEET 12 OF 15

A D1.3 DETAIL: FROST PROOF HYRANT
NO SCALE

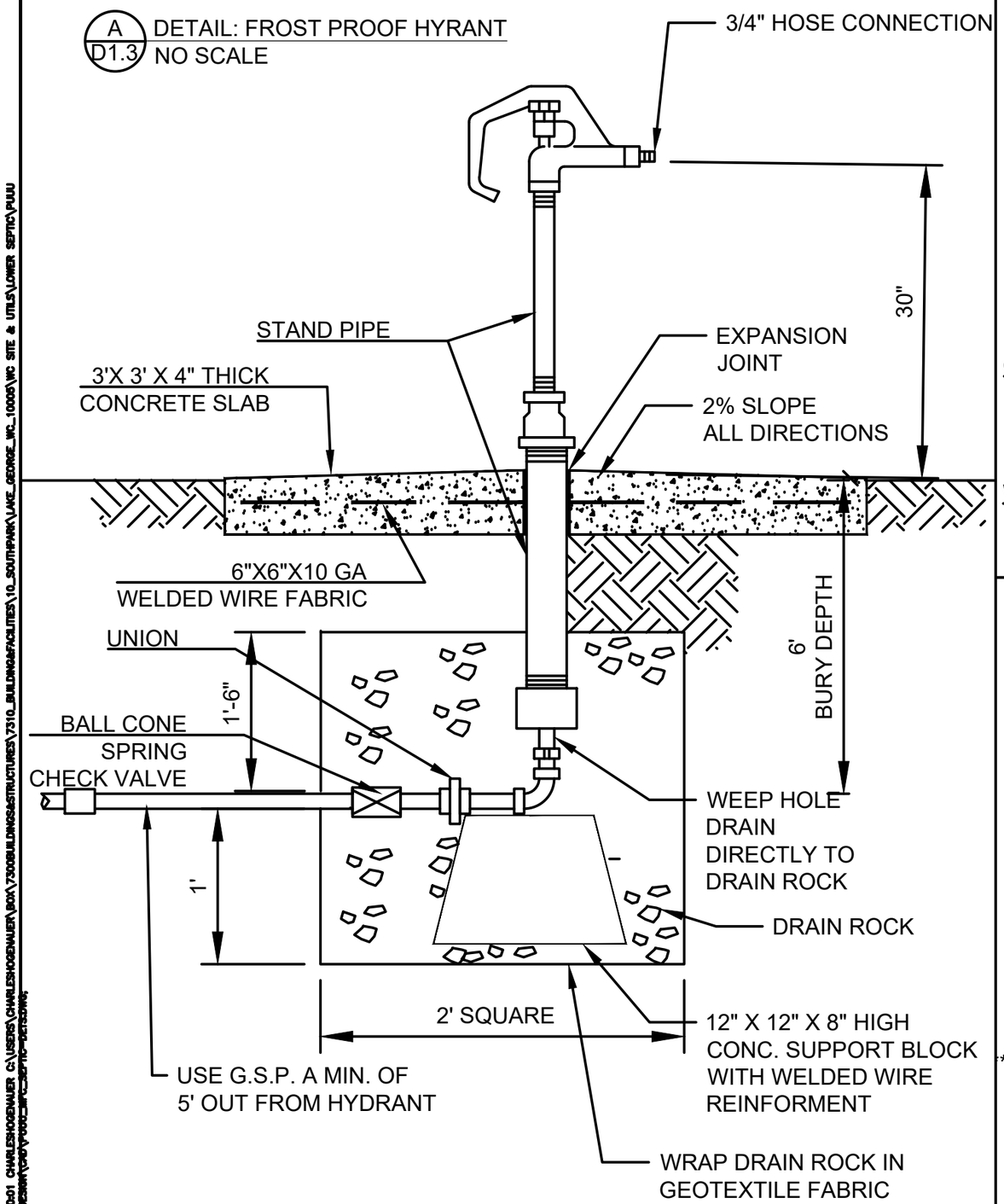

B D1.3 DETAIL: FIRE HYDRANT
NO SCALE

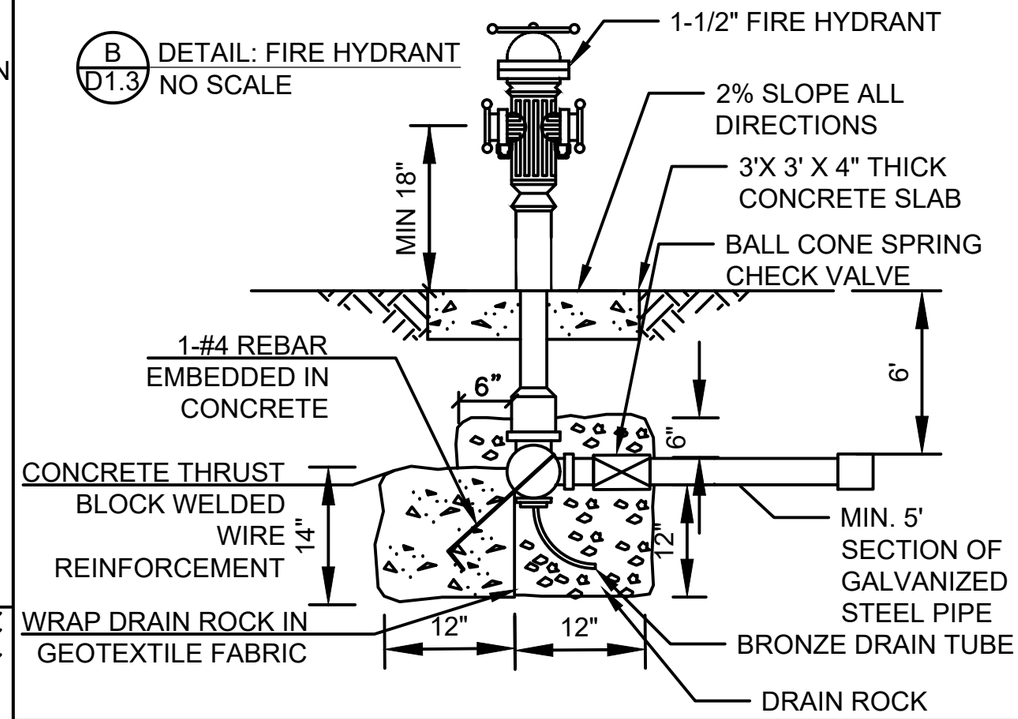

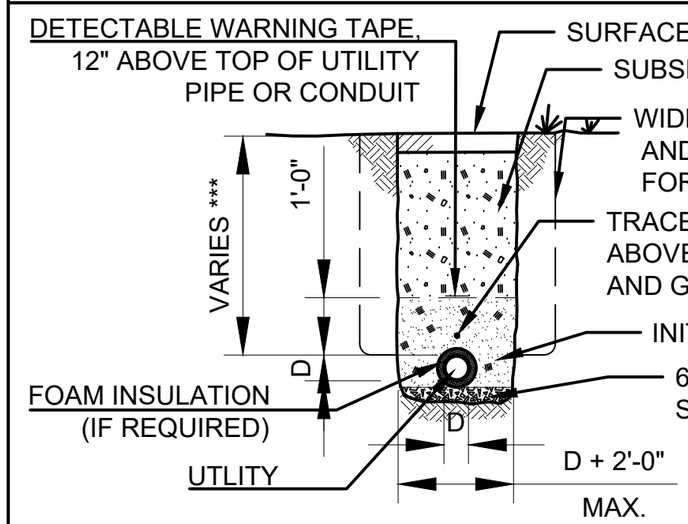

UTILITY LINE DEPTHS
10'-0" MIN. COVER FOR WATER LINE
4'-0" MIN. COVER OVER SEWER LINE
2'-0" MIN. COVER OVER ELECTRICAL
2'-0" MIN COVER OVER GAS LINE

NOTES:
SURFACE BACKFILL SHALL BE TOPSOIL IN LANDSCAPE AREA OR CDOT CLASS 6 AGGERAGTE BASE COURSE IN DRIVE AND PARKING AREAS

C D1.3 DETAIL: TRENCH
NO SCALE

USDA FOREST SERVICE

UNITED STATES DEPARTMENT OF AGRICULTURE

FOREST SERVICE

R2
ROCKY MOUNTAIN REGION

STAMPS, LOGOS, AND SEALS

NO.	REVISION / ISSUE	DATE
3		
2		
1		

PROJECT NAME
PIKE UNDERGROUND UTILITIES UPGRADE

PIKE-SAN ISABEL NATIONAL FORESTS & CIMARRON AND COMANCHE NATIONAL GRASSLANDS

DRAWING TITLE
DETAILS: HYDRANT AND TRENCH

ARCHIVE NO.

DESIGNER C.HOGENAUER
CHECKED P. KRIEBLE
DATE 05/01/2026
SUB SHEET NO. D1.3
SHEET 13 OF 14

4/28/26 10:01 CHARLESHOGENAUER C:\USERS\CHARLESHOGENAUER\BOX\7300BUILDINGS&STRUCTURES\7310_BUILDINGS&FACILITIES\10_SOUTHPARK\LAKE_GEORGE_WC_10000\WC SITE & UTILS\LOWER SEPTIC\PUUU

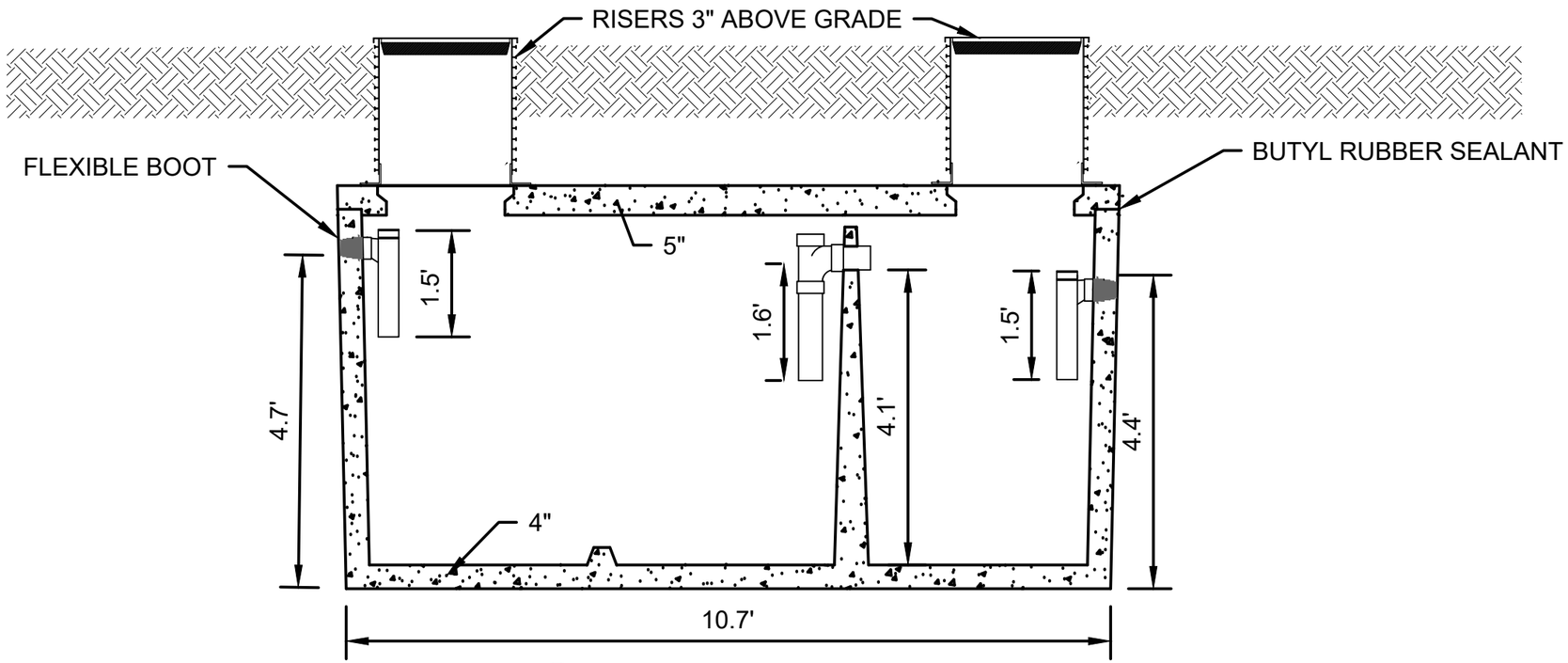

A / D1.4 SECTION VIEW: 1500 GALLON TANK
SCALE: 1"=2' (PLOTTED 11"X17')

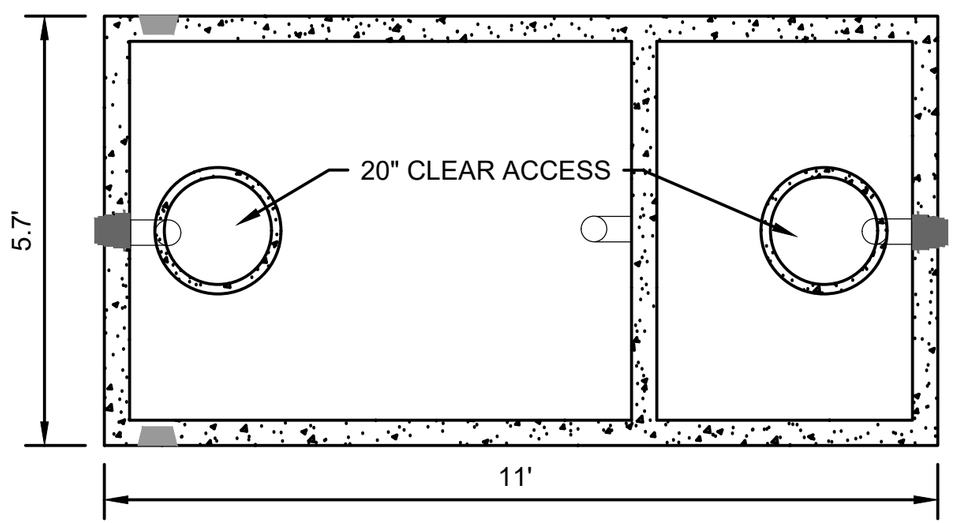

B / D1.4 TOP VIEW: 1500 GALLONS TANK
SCALE: 1"=2' (PLOTTED 11"X17")

UNITED STATES DEPARTMENT OF AGRICULTURE
FOREST SERVICE

R2
ROCKY MOUNTAIN REGION

STAMPS, LOGOS, AND SEALS

NO.	REVISION / ISSUE	DATE
3		
2		
1		

PROJECT NAME

PIKE UNDERGROUND UTILITIES UPGRADE

PIKE-SAN ISABEL NATIONAL FORESTS & CIMARRON AND COMANCHE NATIONAL GRASSLANDS

DRAWING TITLE

DETAILS: AG RANCH SEPTIC TANK

ARCHIVE NO.

DESIGNER C.HOGENAUER
CHECKED P. KRIEBLE
DATE 05/01/2026
SUB SHEET NO. D1.4
SHEET 14 OF 14