United States Department of Agriculture
Forest Service

(R05) PACIFIC SOUTHWEST
SAN BERNARDINO NATIONAL FOREST
SAN BERNARDINO COUNTY, CALIFORNIA
MOUNTAINTOP RANGER DISTRICT
2023 CA FS TROPICAL STORM HILARY
ROAD 1N17 M.P. 0.2 AND M.P. 0.4

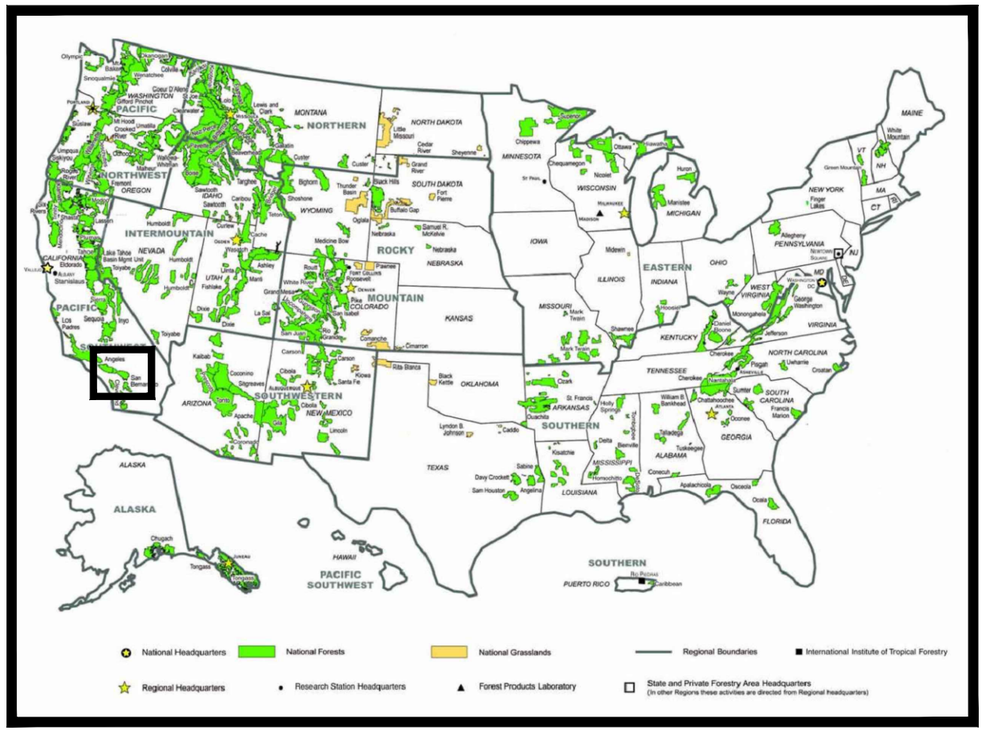

PROJECT LOCATION

VICINITY MAP

TRAVEL DIRECTIONS:

DIRECTIONS FROM SAN BERNARDINO NF SUPERVISORS OFFICE
602 S TIPPECANOE AVE, SAN BERNARDINO, CA 92408
GET ON I-10 E IN LOMA LINDA FROM E CENTRAL AVE AND
MOUNTAIN VIEW AVE 8 MIN (2.9 MI)
HEAD SOUTH TOWARD S TIPPECANOE AVE 272 FT
TURN LEFT TOWARD S TIPPECANOE AVE 92 FT
TURN RIGHT AT THE 1ST CROSS STREET ONTO S TIPPECANOE AVE 0.2 MI
USE THE LEFT 2 LANES TO TURN LEFT ONTO E CENTRAL AVE 0.9 MI
TURN RIGHT ONTO MOUNTAIN VIEW AVE 1.4 MI
TURN LEFT TO MERGE ONTO I-10 E 0.4 MI
TAKE CA-38 E TO 1N02 IN ANGELUS OAKS 51 MIN (27.1 MI)
TURN RIGHT ONTO 1N17

LATITUDE: 34°16'86.3"N
LONGITUDE: 116°82'29.9"W

INDEX OF SHEETS

SHEET	SHEET TITLE	DATE
G-01	COVER SHEET	
G-02	VICINITY MAP	
G-03	ESTIMATE QUANTITIES	
G-04	GENERAL NOTES	
C-01-C-02	RECONSTRUCTION SUMMARIES	
D-01	AGGREGATE NOTES & DETAILS	
D-02	DITCHING & RIP-RAP DETAILS	
D-03	TEMPLATE, TYPICAL SECTION DETAILS	
D-04	CLEARING AND GRUBBING DETAIL	

RECOMMENDED BY:

CHRISTOPHER SOOHOO — Digitally signed by CHRISTOPHER SOOHOO Date: 2026.06.18 09:49:38 -07'00'
DESIGN ENGINEER — DATE

LUISA BANNISTER — Digitally signed by LUISA BANNISTER Date: 2026.06.22 10:22:15 -07'00'
FOREST ENGINEER — DATE

JOSHUA DIREEN — Digitally signed by JOSHUA DIREEN Date: 2026.06.18 11:14:33 -07'00'
DISTRICT RANGER — DATE

APPROVED:

FOREST SUPERVISOR — DATE

5/21/26 10:31 CSOOHOO C:\USERS\CSOOHOO\ONEDRIVE - USDA\DOCUMENTS\ROADS\FY26\ERFO\CHAD\1N17\TEMPLATE TS ROAD PLANS 1N17 MP 02-04- 05-16-2024.DWG;

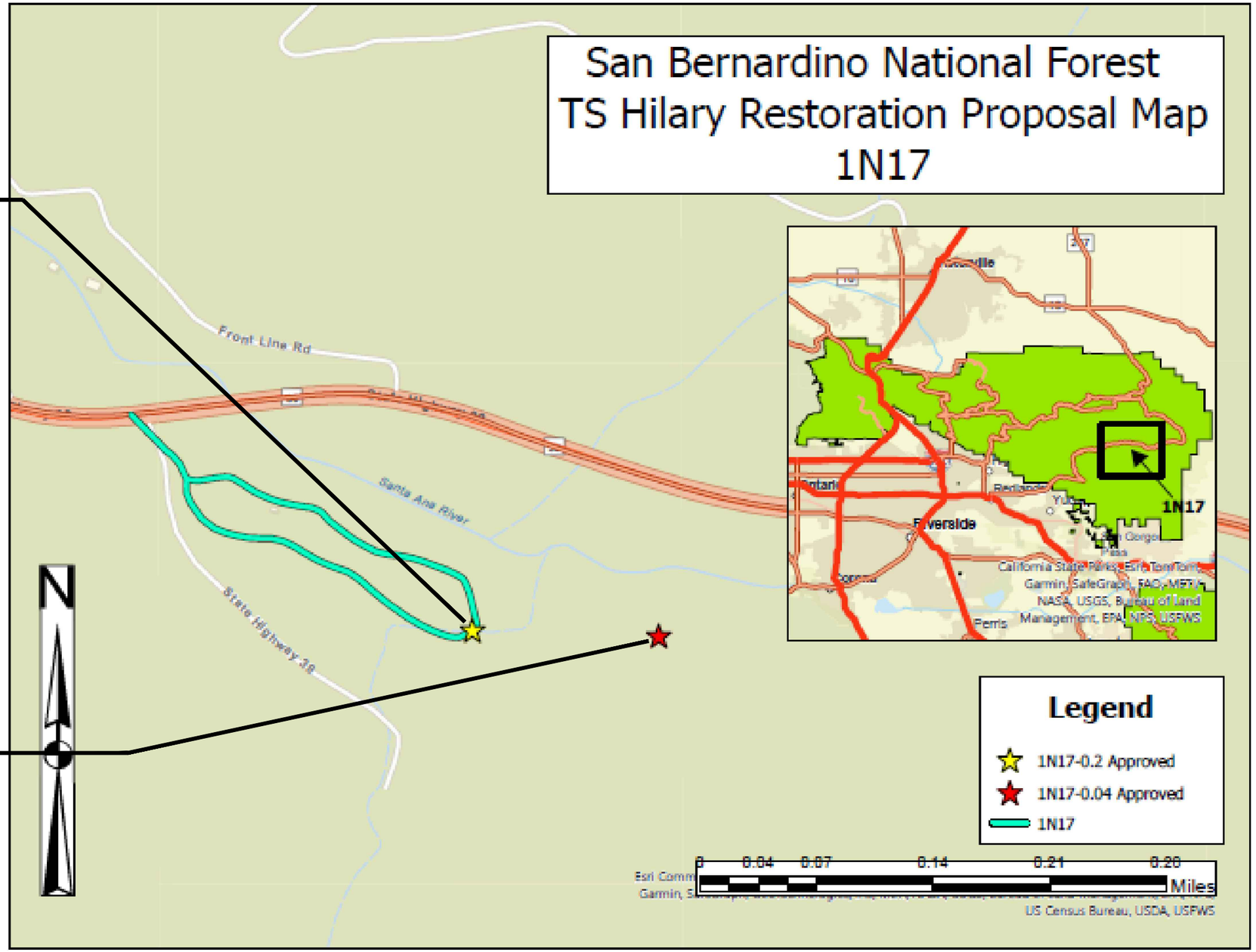

United States Department of Agriculture
Forest Service

(R5)
PACIFIC SOUTHWEST REGION

PROJECT NAME

2023 CA FS TROPICAL STORM HILARY ROAD
1N17 M.P. 0.2 AND M.P. 0.4

SAN BERNARDINO NATIONAL FOREST

MOUNTAINTOP RANGER DISTRICT

DRAWING TITLE

VICINITY MAP

DATE
month/year

ARCHIVE NO.
ARCHIVE_NUMBER

DESIGNER
?

DRAWN
?

CHECKED
?

PROJECT NO.

DWG SHEET NO.
G-02

SHEET 2 OF 10

5/21/26 10:31 CSOOHOO C:\USERS\CSOOHOO\ONEDRIVE - USDA\DOCUMENTS\ROADS\FY26\ERFO\CHAD\1N17\TEMPLATE TS ROAD PLANS 1N17 MP 02-04- 05-16-2024.DWG;

SUMMARY OF ESTIMATED QUANTITIES

PAY ITEM	DESCRIPTION	MEAS.	UNIT	1N17 M.P. 0.2	1N17 M.P. 0.4
			ROAD #	1N17	1N17
15101	Mobilization	LSQ	L.S.	1	1
15713	Soil Erosion & Pollution Control	LSQ	L.S.	1	1
20158	Clearing and Debris Removal	LSQ	L.S.	1	1
20401	Roadway excavation, compaction method B, finishing method A	CQ	L.S.	1	1
20407	Select borrow, compaction method B, finish method A	CQ	C.Y.		20
21102	Roadway obliteration	LSQ	L.S.		1
30101	Crushed Aggregate base,compaction method A	CQ	Ton		75
40607	Asphalt Concrete, CA State DOT, Type A	CQ	Ton		43
62528	Seeding, Fertilizing, and Mulching, hydraulic or dry Method	LSQ	L.S.		1
			SERVICE LEVEL	3	3
			RECONSTRUCTION LENGTH (MILES)	0.06	0.03

CQ = CONTRACT QUANTITIES, AQ = ACTUAL QUANTITIES, LSQ = LUMP SUM QUANTITIES, SQ = STAKED QUANTITIES, VQ = VEHICLE QUANTITIES.

GENERAL NOTES:

1. REFER TO APPLICABLE SECTIONS OF "STANDARD SPECIFICATIONS FOR CONSTRUCTION OF ROAD AND BRIDGES ON FEDERAL HIGHWAY PROJECTS, (FP-14)," AND ATTACHED FOREST SERVICE FP-14 SUPPLEMENTAL SPECIFICATIONS (FSSS) FOR CONTRACT SPECIFICATIONS.
2. MAINTAIN ALL CONSTRUCTION STAKING ON THE PROJECT, UNTIL FINAL INSPECTION AND ACCEPTANCE.
3. AGGREGATE SHALL BE FROM A CERTIFIED WEED FREE SOURCE. PROVIDE CONTRACTING OFFICER WRITTEN NOTIFICATION OF PROPOSED MATERIAL SOURCE 30 DAYS PRIOR TO USE, AS REQUIRED IN FSSS 105.02(c).
4. CONSTRUCTION TOLERANCE D FOR ALL RECONSTRUCTION WORK.

United States Department of Agriculture
Forest Service

(R5)
PACIFIC SOUTHWEST REGION

PROJECT NAME

2023 CA FS TROPICAL STORM HILARY ROAD 1N17 M.P. 0.2 AND M.P. 0.4

SAN BERNARDINO NATIONAL FOREST

MOUNTAINTOP RANGER DISTRICT

DRAWING TITLE

SUMMARY OF ESTIMATED QUANTITIES

DATE
month/year

ARCHIVE NO.
ARCHIVE_NUMBER

DESIGNER
?

DRAWN
?

CHECKED
?

PROJECT NO.

DWG SHEET NO.
G-03

SHEET 3 OF 10

5/21/26 10:31 CSOOHOO C:\USERS\CSOOHOO\ONEDRIVE - USDA\DOCUMENTS\ROADS\FY26\ERFO\CHAD\1N17\TEMPLATE TS ROAD PLANS 1N17 MP 02-04- 05-16-2024.DWG;

GENERAL NOTES

CLEARING

CLEARING & GRUBBING: TREES MAY BE FELLED ON GOVERNMENT LAND OUTSIDE THE CLEARING LIMITS. TREATMENT OF SLASH SHALL BE BY METHOD F, SCATTERING. STUMPS SHALL BE POSITIONED SUCH THAT THEY WILL NOT ROLL ONTO ROADBED OR INTO ROAD DITCH. SLASH SHALL NOT BE DISPOSED OF (1) WITHIN ANY DEFINED STREAM CHANNEL OR (2) WITHIN ANY MARKED BOUNDARIES OF A PROTECTED STREAM. PROTECTED STREAMS ARE SHOWN ON SALE AREA MAP IN TIMBER SALE CONTRACT. A DEFINED STREAM CHANNEL IS ANY CONTINUOUS CHANNEL WHICH EXHIBITS EVIDENCE OF REGULAR ANNUAL SCOUR. EQUIPMENT SHALL NOT BE OPERATED WITHIN ANY STREAM CHANNEL EXCEPT AS ESSENTIAL IN CONSTRUCTION OF ROADS.

GRUBBING OF UNDISTURBED STUMPS IN EMBANKMENT AREAS IS NOT REQUIRED UNLESS THEY EXTEND MORE THAN 12" ABOVE THE ORIGINAL GROUND (MEASURED FROM THE UPHILL SIDE) OR ARE CLOSER THAN 24" TO THE FINISHED SUBGRADE OR 12" TO ANY SLOPE SURFACE.

NO MEASUREMENT SHALL BE MADE FOR CONSTRUCTION OF LOG LANDINGS, BUT THEY WILL BE CONSIDERED A SUBSIDIARY OBLIGATION BY THE CONTRACTOR.

UTILIZATION OF TIMBER: MERCHANTABLE TIMBER FROM GOVERNMENT LAND IS DEFINED AS THAT TIMBER MARKED WITH PAINT BOTH ON THE STUMP AND AT EYE LEVEL. TREES SHALL BE FELLED BY SAWING, SHEARING, OR BY PUSHING THE TREE OVER. ALL TREES SHALL BE CUT SO AS TO LEAVE A STUMP HEIGHT OF 12" OR LESS. THE LOG SHALL BE LIMBED AND TOPPED AT A POINT WHERE THE INSIDE BARK DIAMETER IS NO MORE THAN 3.5".

FOR PUBLIC WORKS CONTRACT: MERCHANTABLE TIMBER SHALL BE HAULED TREE LENGTH TO THE LOG DECK(S) SHOWN ON THE DRAWINGS. ALL MERCHANTABLE TIMBER SHALL BE DECKED NO MORE THAN 10 CALENDER DAYS AFTER FELLING. DECKED LOGS SHALL BE STACKED PARALLEL WITH ALL BUTT ENDS FACING THE SAME DIRECTION AND STACKED A MINIMUM OF 6 LOGS HIGH. THESE STACKS SHALL BE PARALLEL TO THE ROAD WITH THE BUTTS POINTED IN THE DIRECTION OF HAUL. THERE MUST BE ROOM ON THE DECK AT THE BUTTEND OF LOGS, FOR A LOADER TO OPERATE SAFELY AND EFFICIENTLY. THE ROAD CONTRACTOR SHALL PROVIDE THE TIMBER PURCHASER ACCESS TO THE LOG DECK(S) SHOWN ON THE DRAWINGS FOR THE PURPOSE OF REMOVING THE RIGHT-OF-WAY TIMBER. BY MUTUAL AGREEMENT BETWEEN THE CONTRACTOR AND THE TIMBER PURCHASER, ALL FELLED TIMBER MEETING UTILIZATION STANDARDS MAY BE MADE AVAILABLE TO THE TIMBER PURCHASER IN LENGTHS AND AT LOCATIONS WITHIN THE CONSTRUCTION LIMITS AS AGREED TO BETWEEN THE TWO PARTIES. THE TIMBER PURCHASER MUST RECEIVE WRITTEN APPROVAL FROM THE FOREST SERVICE PRIOR TO REMOVAL OF ANY TIMBER. NOTHING HEREIN SHALL BE CONSTRUED AS RELIEVING THE CONTRACTOR OF ANY RESPONSIBILITY FOR REPAIRING, AT HIS EXPENSE, DAMAGES THAT MAY OCCUR AS A RESULT OF HIS AUTHORIZING THE TIMBER PURCHASER USE OF THE ROAD FOR REMOVAL OF RIGHT-OF-WAY TIMBER PRIOR TO FINAL ACCEPTANCE BY THE GOVERNMENT.

EXCAVATION

CONSTRUCTION TOLERANCES: ALL DITCHES AND DRAINAGE DIPS SHALL BE CONSTRUCTED TO FLOW IN THE DIRECTION SHOWN ON THE DRAWINGS OR DESIGNATED ON THE GROUND. STUMP HOLES WITHIN OR ADJACENT TO THE ROADBED SHALL BE BACKFILLED TO PREVENT PONDING OF WATER. FILL SLOPES, WITHIN 50' OF PIPES OR WHERE THE DEPTH OF FILL IS MORE THAN 5' SHALL NOT BE STEEPER THAN SHOWN ON TYPICAL SECTIONS. IN OTHER AREAS, FILL SLOPES MAY BE NO MORE THAN 10% STEEPER THAN SHOWN. TOLERANCE CLASS (E).

SEEDING & MULCHING

SEEDING AND MULCHING SHALL BE COMPLETED ON ALL REQUIRED AREAS OF INDIVIDUAL ROADS WITHIN 10 DAYS AFTER EXCAVATION FOR THE ROAD IS COMPLETED.

BORROW

UNLESS OTHERWISE NOTED BORROW MATERIAL IS NOT AVAILABLE ON SITE AND SHALL BE OBTAINED FROM PRIVATE SOURCES

- NOTE W20-3

ONE 36"X36" W20-3 (PER MUTCD & S.H.S [STANDARD HIGHWAY SIGNS]) MOVABLE CONSTRUCTION SIGN WILL BE REQUIRED AT EACH END OF THE CONSTRUCTION ZONE TO NOTIFY THE PUBLIC DURING CONSTRUCTION ACTIVITIES. THE SIGNS SHALL BE MOUNTED A MINIMUM OF 12" ABOVE THE GROUND, AND SHALL BE PLACED WITHIN 500 FEET OF EACH CONSTRUCTION ZONE END. IF THE ROAD DEAD ENDS OR PUBLIC USE HAS BEEN OBSTRUCTED, ONLY ONE W20-3 WILL BE REQUIRED. THE ROAD SHALL NOT BE CLOSED
FOR MORE THAN 2-HOURS WHEN USING THE W20-3. IF THE ROAD IS CLOSED FOR MORE THAN 2-HOURS LIMIT A TYPE III MOVABLE BARRICADE WILL BE REQUIRED IN LIEU OF THE W20-3.

- NOTE TYPE III

ONE TYPE III MOVABLE BARRICADE WILL BE REQUIRED TO COMPLETELY CLOSE EACH 8' OF TRAVELED WAY WIDTH. SIGNS SHALL OBSCURE NO MORE THAN 50 PERCENT OF THE TOP 2 RAILS OR 33 PERCENT OF ALL THREE RAILS. SIGNS SHALL BE MOUNTED A MINIMUM OF 12" ABOVE THE GROUND. WHERE A BARRICADE ARRAY EXTENDS ACROSS A ROADWAY, THE STRIPES SHALL SLOPE DOWNWARD IN THE DIRECTION TOWARD WHICH TRAFFIC MUST TURN OR PASS. WHERE BOTH RIGHT AND LEFT VEHICULAR MOVEMENTS ARE PROVIDED, THE STRIPES SHALL SLOPE DOWNWARD IN BOTH DIRECTIONS FROM THE CENTER OF THE BARRICADE ARRAY. WHERE NO VEHICULAR MOVEMENTS ARE PROVIDED, THE STRIPES SHALL SLOPE DOWNWARD TOWARD THE CENTER OF THE BARRICADE ARRAY PAY FOR EITHER SIGN WOULD BE INCIDENTAL TO PAY ITEM 635.01

W20-3 MOVABLE BARRICADE

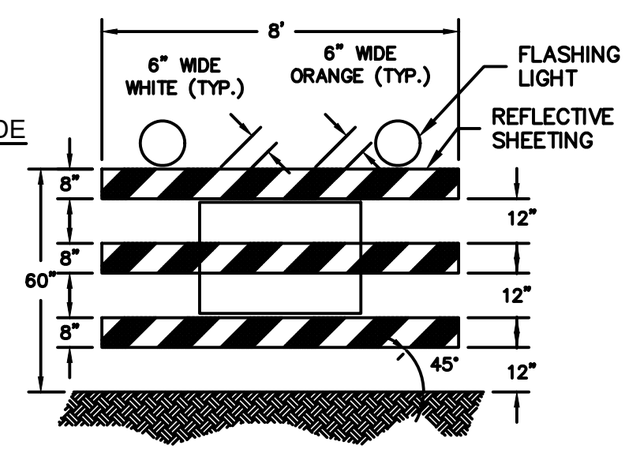

TYPE III MOVABLE BARRICADE

United States Department of Agriculture
Forest Service

(R5)
PACIFIC SOUTHWEST REGION

PROJECT NAME

2023 CA FS TROPICAL STORM HILARY ROAD 1N17 M.P. 0.2 AND M.P. 0.4

SAN BERNARDINO NATIONAL FOREST

MOUNTAINTOP RANGER DISTRICT

DRAWING TITLE

GENERAL NOTES

DATE
month/year

ARCHIVE NO.
ARCHIVE_NUMBER

DESIGNER
?

DRAWN
?

CHECKED
?

PROJECT NO.

DWG SHEET NO.
G-04

SHEET 4 OF 10

5/21/26 10:31 CSOOHOO C:\USERS\CSOOHOO\ONEDRIVE - USDA\DOCUMENTS\ROADS\FY26\ERFO\CHAD\1N17\TEMPLATE TS ROAD PLANS 1N17 MP 02-04- 05-16-2024.DWG;

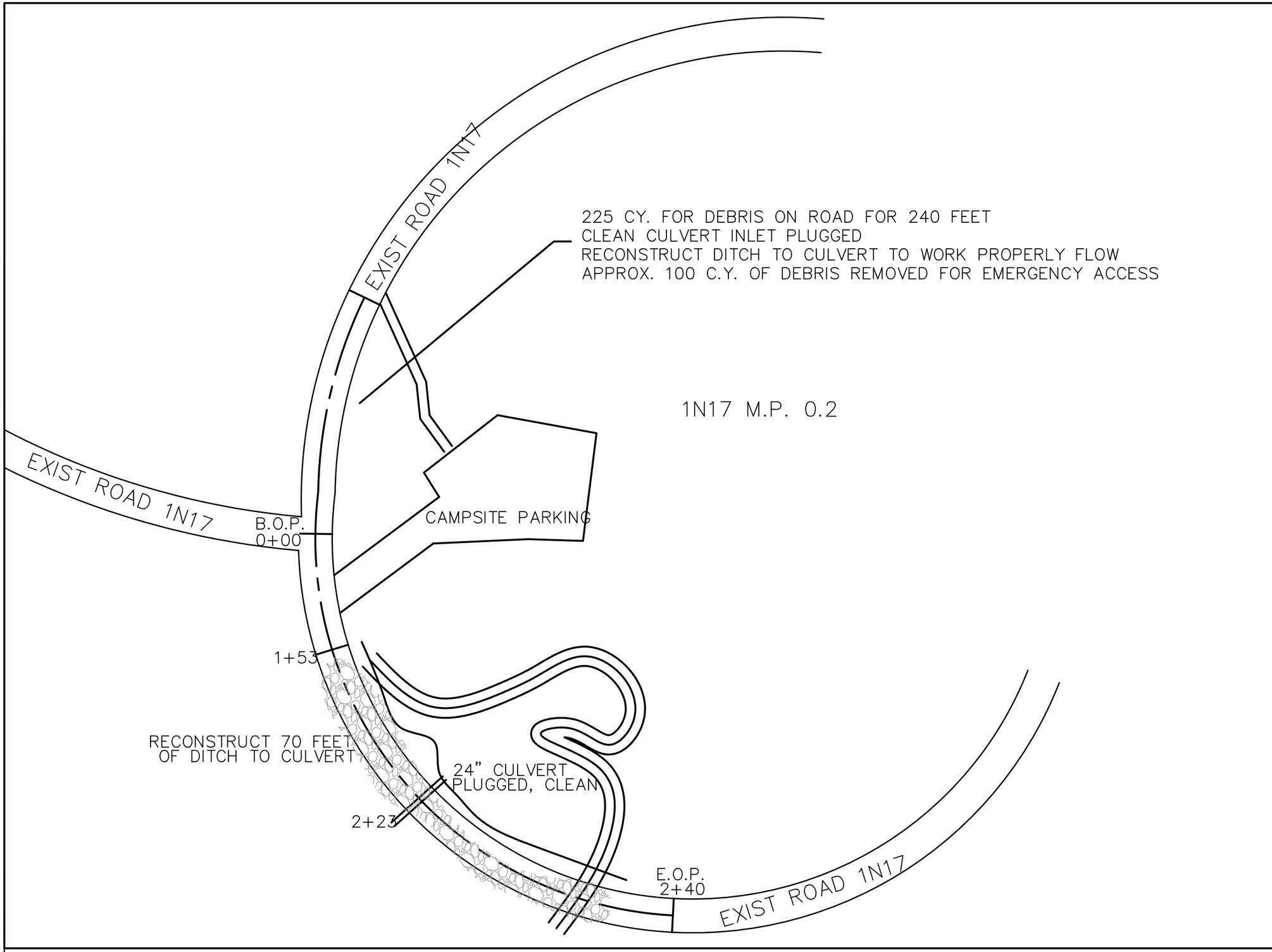

United States Department of Agriculture
Forest Service

(R5)
PACIFIC SOUTHWEST REGION

PROJECT NAME

2023 CA FS TROPICAL STORM HILARY ROAD 1N17 M.P. 0.2 AND M.P. 0.4

SAN BERNARDINO NATIONAL FOREST

MOUNTAINTOP RANGER DISTRICT

DRAWING TITLE

CONSTRUCTION DIAGRAM NFSR 1N17 M.P. 0.2

DATE
month/year

ARCHIVE NO.
ARCHIVE_NUMBER

DESIGNER
?

DRAWN
?

CHECKED
?

PROJECT NO.

DWG SHEET NO.
C-01

SHEET 5 OF 10

5/21/26 10:31 CSOOHOO C:\USERS\CSOOHOO\ONEDRIVE - USDA\DOCUMENTS\ROADS\FY26\ERFO\CHAD\1N17\TEMPLATE TS ROAD PLANS 1N17 MP 02-04- 05-16-2024.DWG;

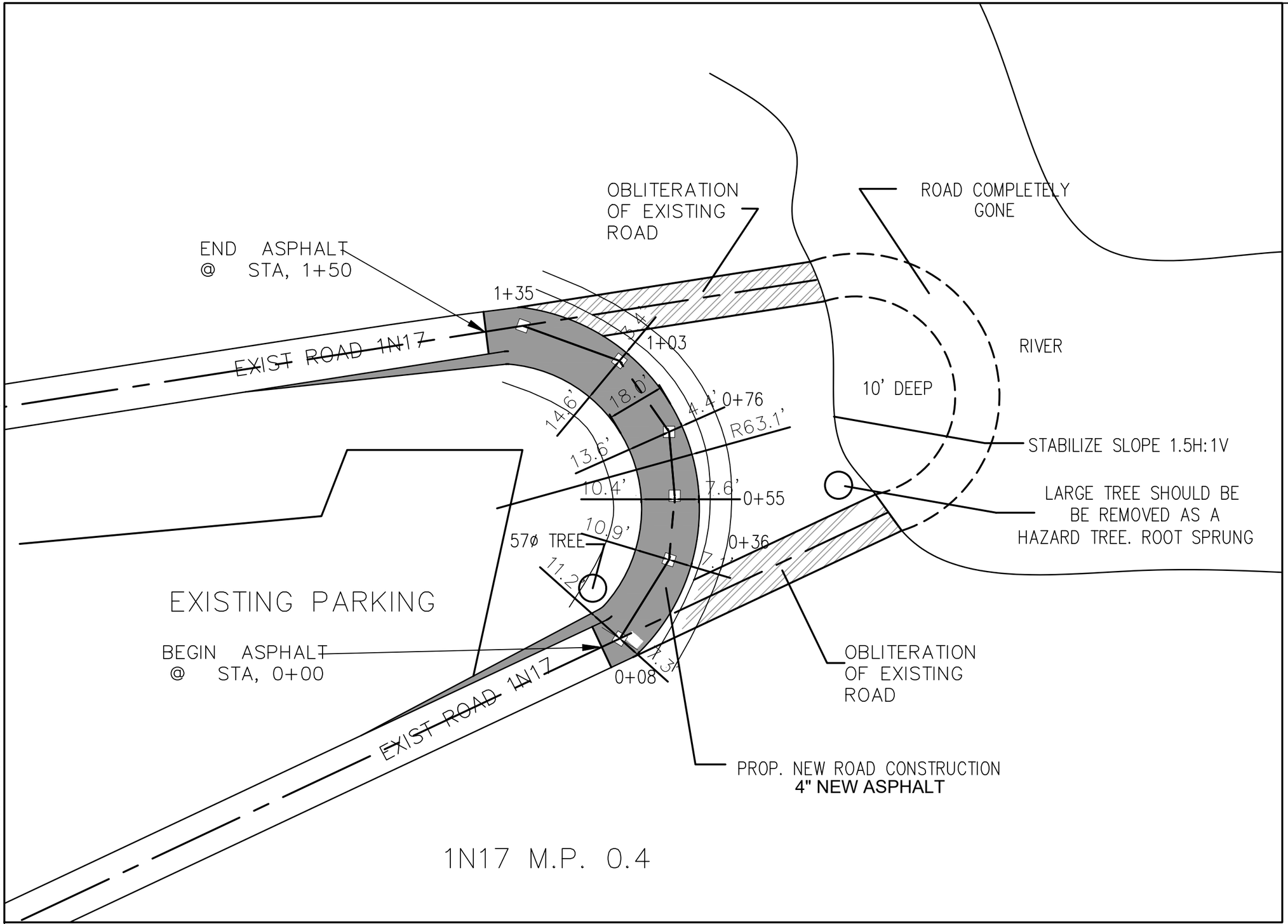

United States Department of Agriculture
Forest Service

(R5)
PACIFIC SOUTHWEST REGION

PROJECT NAME

2023 CA FS TROPICAL STORM HILARY ROAD 1N17 M.P. 0.2 AND M.P. 0.4

SAN BERNARDINO NATIONAL FOREST

MOUNTAINTOP RANGER DISTRICT

DRAWING TITLE

CONSTRUCTION DIAGRAM NFSR 1N17 M.P. 0.4

DATE
month/year

ARCHIVE NO.
ARCHIVE_NUMBER

DESIGNER
?

DRAWN
?

CHECKED
?

PROJECT NO.

DWG SHEET NO.
C-02

SHEET 6 OF 10

5/21/26 10:31 CSOOHOO C:\USERS\CSOOHOO\ONEDRIVE - USDA\DOCUMENTS\ROADS\FY26\ERFO\CHAD\1N17\TEMPLATE TS ROAD PLANS 1N17 MP 02-04- 05-16-2024.DWG;

TURNAROUND, RAMP, TURNOUT, AND DOUBLE LANE DETAILS

N.T.S.

NOTE:-ROAD WITH AGGREGATE :

- AGGREGATE QUANTITIES ARE COMPACTED IN PLACE VOLUMES.
- AGGREGATE QUANTITIES INCLUDE MATERIAL FOR FULL WIDTH OF CURVE WIDENING, RAMPS, INTERSECTIONS, AND DIPS.
- UNLESS OTHERWISE NOTED, AGGREGATE IS NOT AVAILABLE ONSITE AND APPRAISED FROM PRIVATE SOURCES.

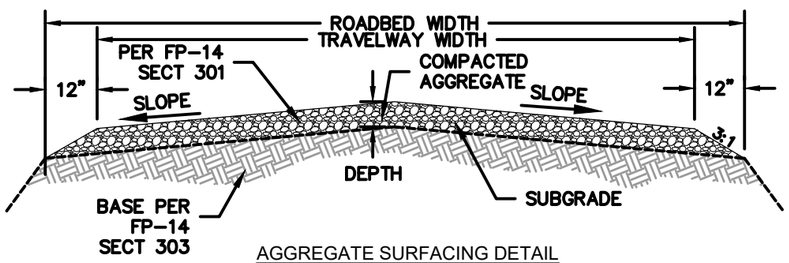

AGGREGATE SURFACING DETAIL

N.T.S.

CRUSHED AGGREGATE 4" DEEP
SCREENED AGGREGATE 4" DEEP
PIT RUN AGGREGATE 6" DEEP
NF AGGREGATE 12" DEEP UNLESS OTHER WISE NOTED ON DRAWINGS

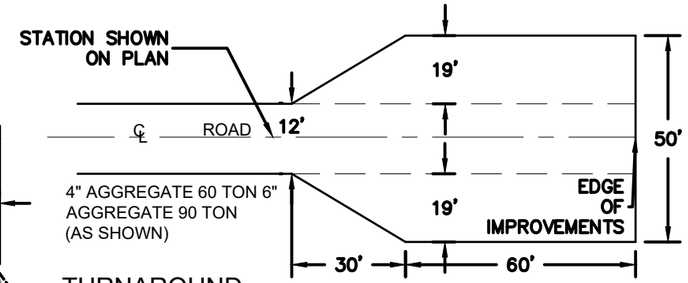

TURNAROUND

NOT TO SCALE

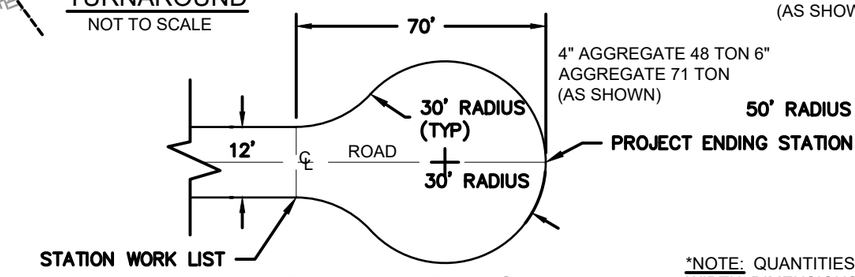

BUBBLE TURNAROUND

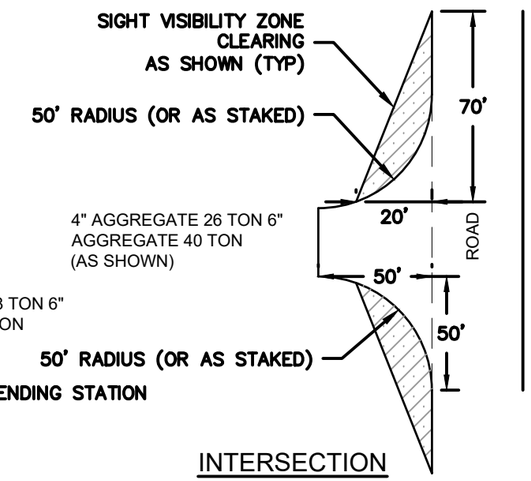

INTERSECTION

*NOTE: QUANTITIES SHOWN ARE BASED UPON A 12' TRAVELED WAY WIDTH. DIMENSIONS SHOWN ARE TRAVELED WAY

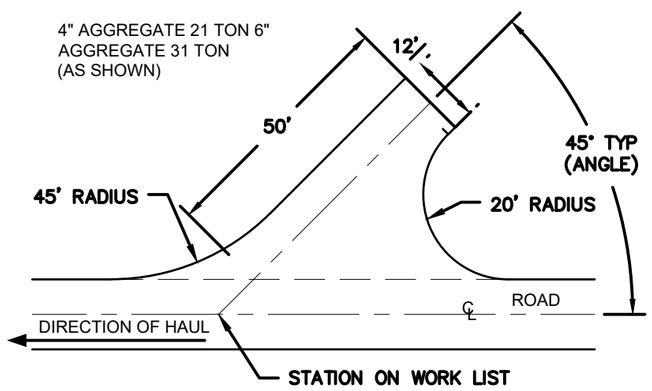

SKEWED RAMP

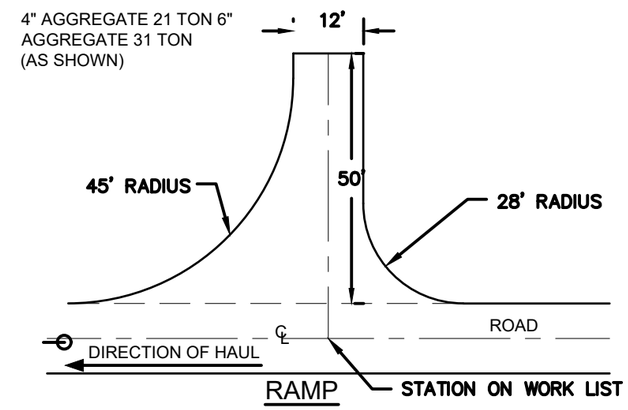

RAMP

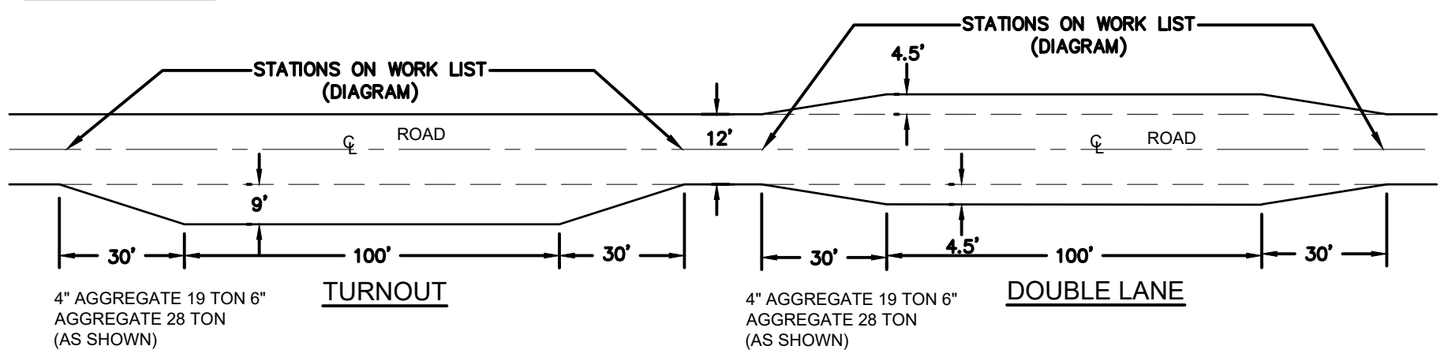

TURNOUT

DOUBLE LANE

USDA FOREST SERVICE

United States Department of Agriculture
Forest Service

(R5)
PACIFIC SOUTHWEST REGION

PROJECT NAME

2023 CA FS TROPICAL STORM HILARY ROAD 1N17 M.P. 0.2 AND M.P. 0.4

SAN BERNARDINO NATIONAL FOREST

MOUNTAINTOP RANGER DISTRICT

DRAWING TITLE

AGGREGATE NOTES & DETAILS

DATE
month/year

ARCHIVE NO.
ARCHIVE_NUMBER

DESIGNER
?

DRAWN
?

CHECKED
?

PROJECT NO.

DWG SHEET NO.
D-01

SHEET 7 OF 10

5/21/26 10:31 CSOOHOO C:\USERS\CSOOHOO\ONEDRIVE - USDA\DOCUMENTS\ROADS\FY26\ERFO\CHAD\1N17\TEMPLATE TS ROAD PLANS 1N17 MP 02-04- 05-16-2024.DWG;

DITCHING DETAILS

N.T.S.

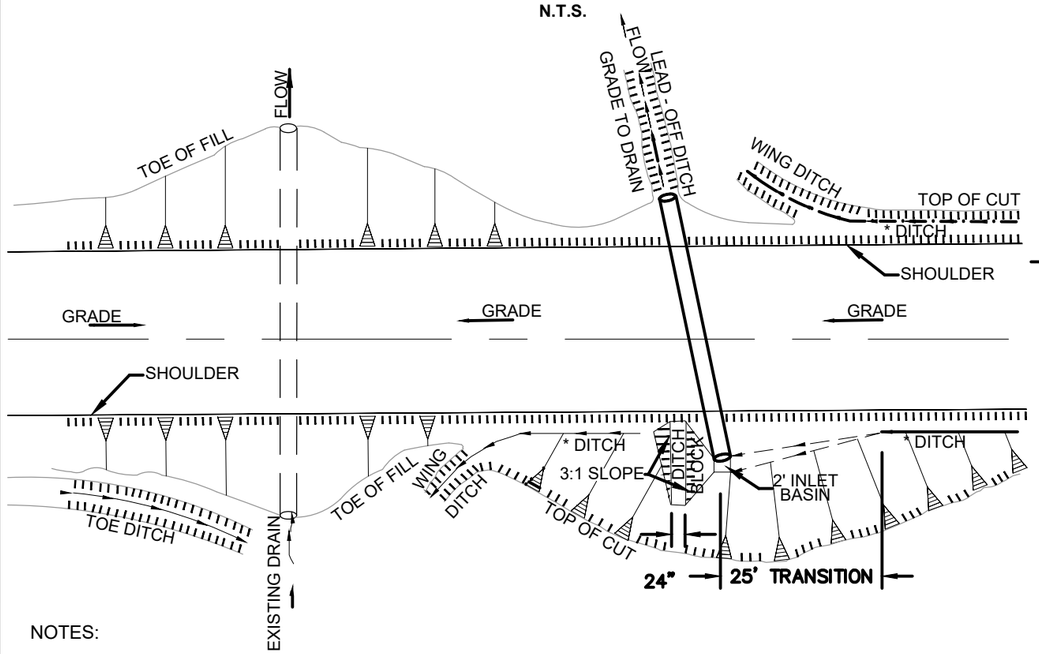

NOTES:

1. THE SLOPE OF LEAD-OFF DITCHES SHALL BE CONSTRUCTED TO A MINIMUM OF -1% FOR A MINIMUM OF 50'.
2. DITCH BLOCK WILL NOT BE REQUIRED WHEN INLET BASIN IS IN A SAG.
3. DITCH BLOCK ELEVATION SHALL BE 4" LOWER THAN THE ADJACENT SUBGRADE ELEVATION.
4. DITCHES SHALL BE CONSTRUCTED AT LOCATIONS SHOWN.
5. * ROADWAY DITCH AS SHOWN ON TYPICAL SECTIONS.

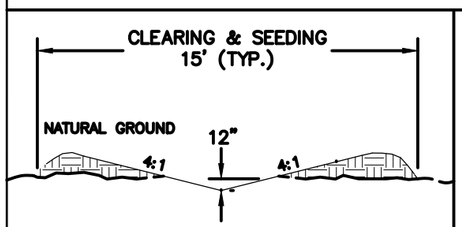

LEAD OFF DITCH

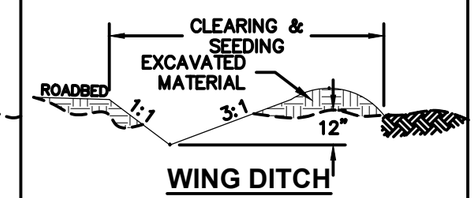

WING DITCH

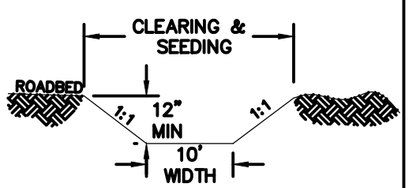

FLAT BOTTOM DITCH

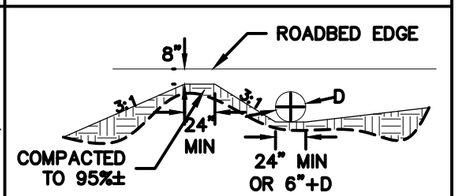

DITCH BLOCK

RIPRAP DETAIL

NTS

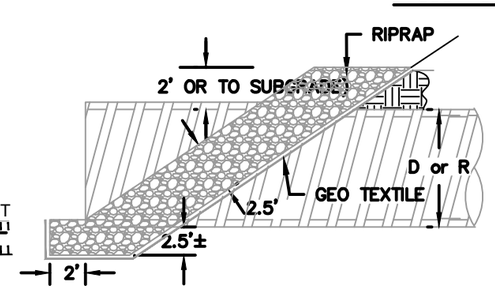

INLET SECTION VIEW

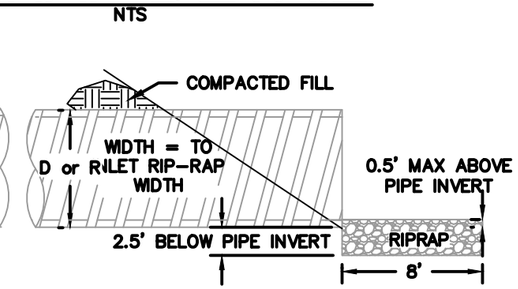

OUTLET SECTION VIEW

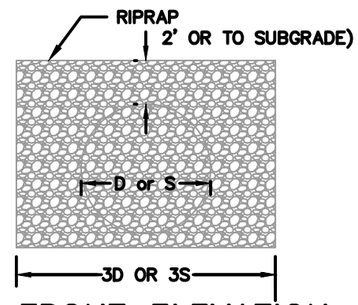

FRONT ELEVATION

SINGLE BARREL CULVERT

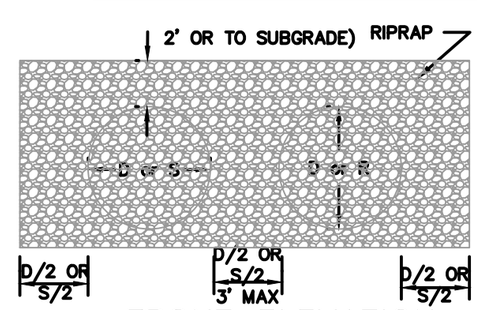

FRONT ELEVATION

DOUBLE BARREL CULVERT

NOTES:

1. SECTION VIEW APPLIES WHERE RIPRAP IS REQUIRED WITH OR WITHOUT CULVERT INSTALLATIONS. WHERE CULVERTS ARE REQUIRED SEE FRONT ELEVATIONS FOR LENGTH. WHERE CULVERTS ARE NOT REQUIRED RIPRAP SHALL BE PLACED TO SUBGRADE ELEVATION FOR LENGTH SHOWN ON THE PLAN.
2. RIPRAP CLASS 3, PLACEMENT METHOD A IS REQUIRED. GRADATION SHALL BE AS REQUIRED IN STANDARD SPECIFICATION TABLE 705-1, WHICH IS AS FOLLOWS:

PERCENT OF ROCK EQUAL OR SMALLER BY COUNT, Dx	WEIGHT (POUNDS)	RANGE OF INTERMEDIATE DIMENSIONS (INCHES)
100	750-1600	21-27
85	270-560	15-19
50	110-220	11-14
15	42-81	8-10

3. D = DIAMETER FOR ROUND PIPE, R & S = RISE AND SPAN FOR PIPE ARCH.
4. FOR MULTIPLE PIPE INSTALLATIONS, RIPRAP WILL BE CONTINUOUS BETWEEN BARRELS.
5. GEOTEXTILES SHALL BE PLACED UNDER RIPRAP IN ALL INSTALLATIONS AND SHALL MEET THE REQUIREMENTS FOR TYPE IV-D OF SECTION 714.01 OF THE SPECIFICATIONS. GEOTEXTILE SHALL BE NONWOVEN. PAYMENT FOR GEOTEXTILES IS INCLUDED IN PAY ITEM 251.16.
6. IN NARROW CHANNELS, ADJUST ROCK TO FIT STREAMBANKS.

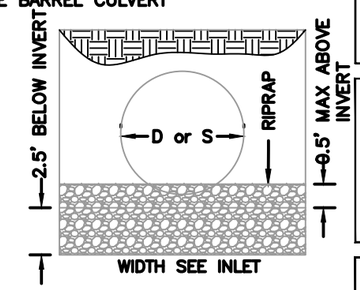

OUTLET ELEVATION

SINGLE BARREL CULVERT

USDA FOREST SERVICE

United States Department of Agriculture
Forest Service

(R5)
PACIFIC SOUTHWEST REGION

PROJECT NAME

2023 CA FS TROPICAL STORM HILARY ROAD
1N17 M.P. 0.2 AND M.P. 0.4

SAN BERNARDINO NATIONAL FOREST

MOUNTAINTOP RANGER DISTRICT

DRAWING TITLE

DITCHING & RIP-RAP DETAILS

DATE
month/year

ARCHIVE NO.
ARCHIVE_NUMBER

DESIGNER
?

DRAWN
?

CHECKED
?

PROJECT NO.

DWG SHEET NO.
D-02

SHEET 8 OF 10

5/21/26 10:31 CSOOHOO C:\USERS\CSOOHOO\ONEDRIVE - USDA\DOCUMENTS\ROADS\FY26\ERFO\CHAD\1N17\TEMPLATE TS ROAD PLANS 1N17 MP 02-04- 05-16-2024.DWG;

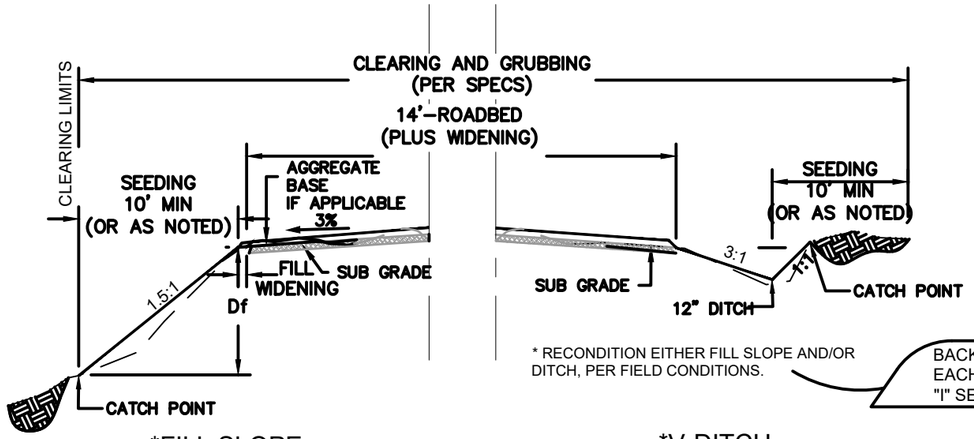

* RECONDITION EITHER FILL SLOPE AND/OR DITCH, PER FIELD CONDITIONS.

BACKSLOPE ROUNDING 24" EACH WAY FROM CATCH POINT "I" SERVICE LEVEL RD. ONLY

*FILL SLOPE

*V-DITCH

RECONSTRUCTION DITCH/FILL SLOPE TEMPLATE, TYPICAL SECTION #1

NOT TO SCALE

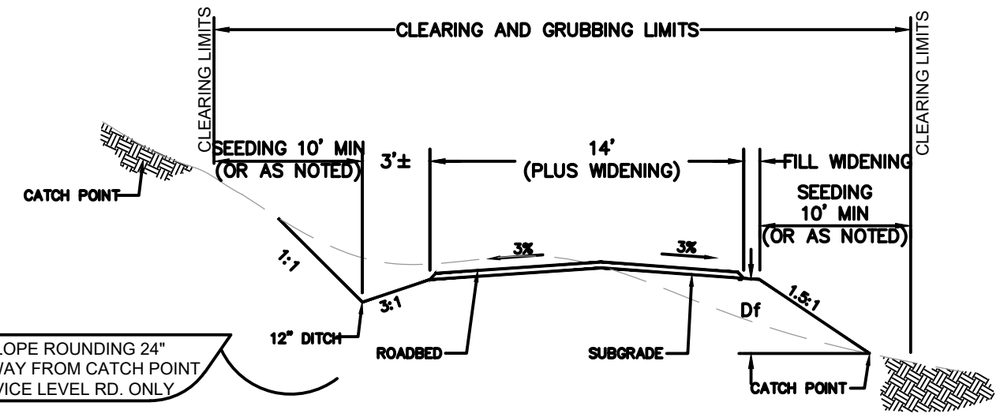

LINEAR GRADING DITCH TEMPLATE, TYPICAL SECTION #2

NOT TO SCALE

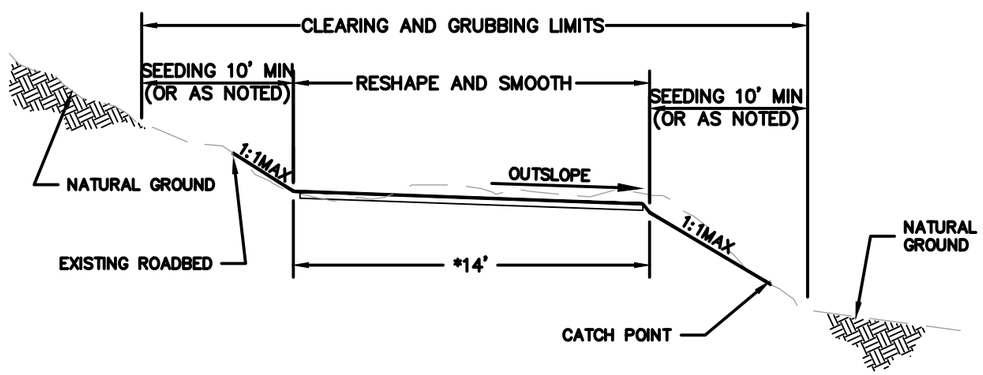

RECONSTRUCTION OUTSLOPE TEMPLATE, TYPICAL SECTION #3

NOT TO SCALE

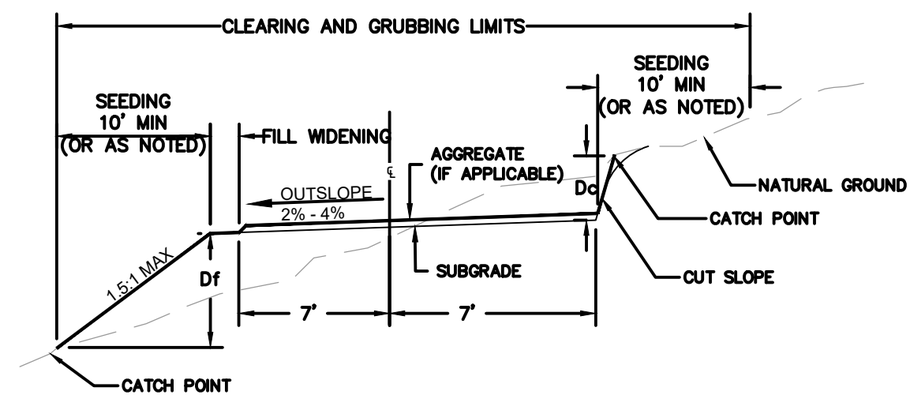

LINEAR GRADING OUTSLOPE TEMPLATE, TYPICAL SECTION #4

NOT TO SCALE

NOTES:

1. ROADBED SHALL BE RECONSTRUCTED TO THE MINIMUM WIDTH SHOWN ON THE CONSTRUCTION DIAGRAM SHEETS. WHERE THE EXISTING ROADBED IS WIDER THAN SHOWN, THE ENTIRE WIDTH OF THE EXISTING ROADBED SHALL BE RECONSTRUCTED.
2. DITCH DEPTH IS MEASURED FROM THE SUBGRADE.
3. ALL ROCK PROTRUDING FROM THE DITCH INSLOPE SHALL BE REMOVED.
4. CROWN AND SUPERELEVATION SHALL BE APPLIED. CROWN RATE SHALL BE 3%. SUPERELEVATION RATE SHALL BE $\frac{1}{4}$" - $\frac{1}{2}$" PER FOOT.
5. ALL ROCK PROTRUDING FROM THE SUBGRADE MORE THAN 1" SHALL BE REMOVED BEFORE PLACING SURFACING.
6. RECONSTRUCTION INCLUDES THE RECONSTRUCTION OF ALL EXISTING WING DITCHES, LEAD-OFF DITCHES, CULVERT INLETS AND OUTLETS FROM EXISTING AND NEW PIPE INSTALLATIONS TO ENSURE DRAINAGE OF -1% FOR A MINIMUM OF 50'.
7. CLEARING SHALL INCLUDE ALL LIMBS HANGING OVER THE CLEARING LIMITS TO A CLEAR HEIGHT OF 14' ABOVE THE ROAD SURFACE.
8. SEE THE CONSTRUCTION DIAGRAM SHEETS FOR SURFACING WIDTHS AND OTHER DETAILS.
9. ADDITIONAL WIDTH FOR FILL WIDENING SHALL BE AS FOLLOWS:

Df	FILL WIDENING
0'–6'	0'
6'–9'	1'
9'+	2'

United States Department of Agriculture
Forest Service

(R5)
PACIFIC SOUTHWEST REGION

PROJECT NAME

2023 CA FS TROPICAL STORM HILARY ROAD 1N17 M.P. 0.2 AND M.P. 0.4

SAN BERNARDINO NATIONAL FOREST

MOUNTAINTOP RANGER DISTRICT

DRAWING TITLE

TEMPLATE, TYPICAL SECTION DETAILS

DATE
month/year

ARCHIVE NO.
ARCHIVE_NUMBER

DESIGNER
?

DRAWN
?

CHECKED
?

PROJECT NO.

DWG SHEET NO.
D-03

SHEET 9 OF 10

5/21/26 10:31 CSOOHOO C:\USERS\CSOOHOO\ONEDRIVE - USDA\DOCUMENTS\ROADS\FY26\ERFO\CHAD\1N17\TEMPLATE TS ROAD PLANS 1N17 MP 02-04- 05-16-2024.DWG;

CLEARING AND GRUBBING DETAILS

N.T.S.

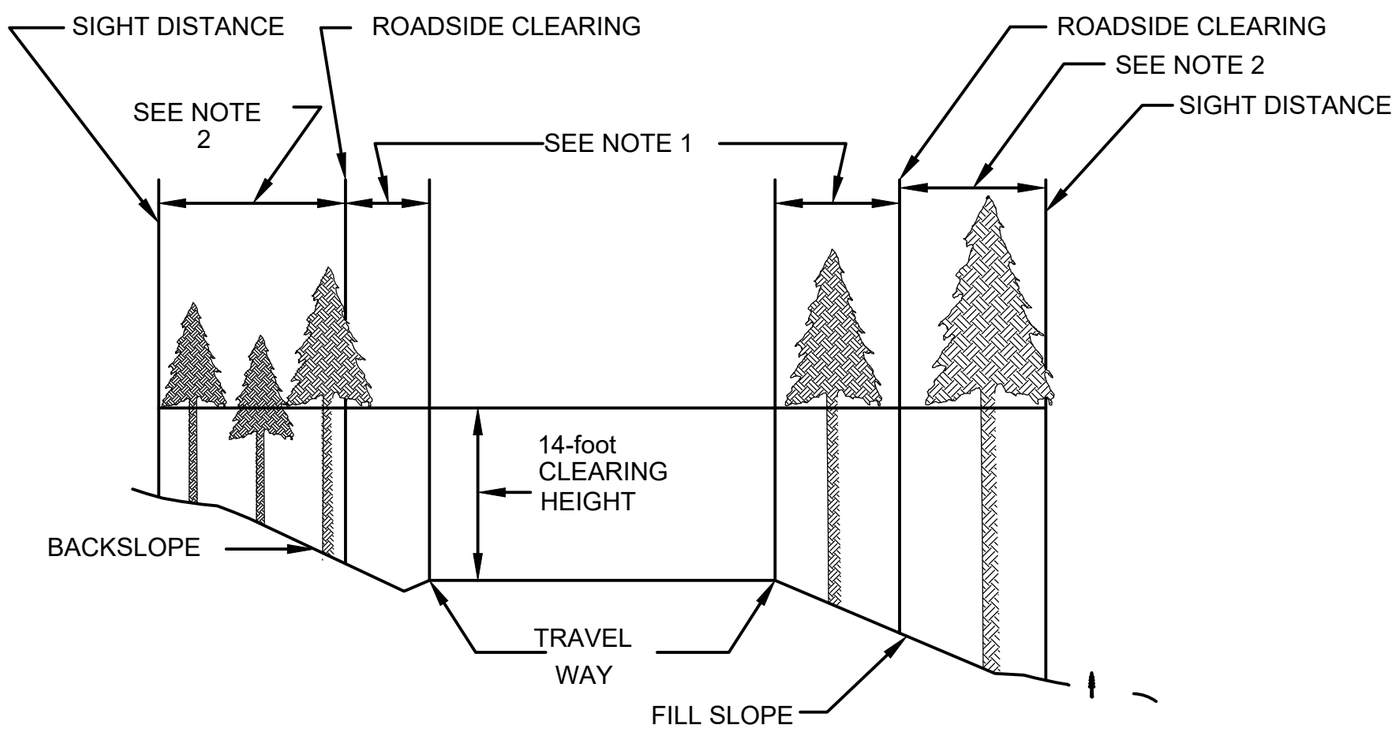

CLEARING LIMITS TYPICAL

NO SCALE

CONSTRUCTION NOTES:

1. DURING CLEARING OPERATIONS, ALL VEGETATION WITHIN THE TRAVEL AND 3 FT OF THE SHOULDER SHALL BE REMOVED. GRUB DEEP ENOUGH TO REMOVE STUMPS ROOTS, BURIED LOGS, AND OTHER VEGETATION DEBRIS WITHIN CLEARING LIMIT.
2. BRANCHES ON REMAINING TREES SHALL BE TRIMMED FROM GROUND LEVEL TO A CLEARING HEIGHT LIMIT OF 14 FEET ABOVE THE ROADBED OR TO A LIMIT OF 60% OF THE TREE'S HEIGHT, WHICHEVER IS LESS. LIMBS OF VEGETATION SHALL BE CUT SO AS TO NOT PROTRUDE WITHIN THE CLEARING LIMIT.

United States Department of Agriculture
Forest Service

(R5)
PACIFIC SOUTHWEST REGION

PROJECT NAME

2023 CA FS TROPICAL STORM HILARY ROAD 1N17 M.P. 0.2 AND M.P. 0.4

SAN BERNARDINO NATIONAL FOREST

MOUNTAINTOP RANGER DISTRICT

DRAWING TITLE

TEMPLATE, TYPICAL SECTION DETAILS

DATE
month/year

ARCHIVE NO.
ARCHIVE_NUMBER

DESIGNER
?

DRAWN
?

CHECKED
?

PROJECT NO.

DWG SHEET NO.
D-04

SHEET 10 OF 10

5/21/26 10:31 CSOOHOO C:\USERS\CSOOHOO\ONEDRIVE - USDA\DOCUMENTS\ROADS\FY26\ERFO\CHAD\1N17\TEMPLATE TS ROAD PLANS 1N17 MP 02-04- 05-16-2024.DWG;