United States Department of Agriculture
Forest Service

(R05) PACIFIC SOUTHWEST
SAN BERNARDINO NATIONAL FOREST
SAN BERNARDINO COUNTY, CALIFORNIA
MOUNTAINTOP RANGER DISTRICT
2023 CA FS TROPICAL STORM HILARY

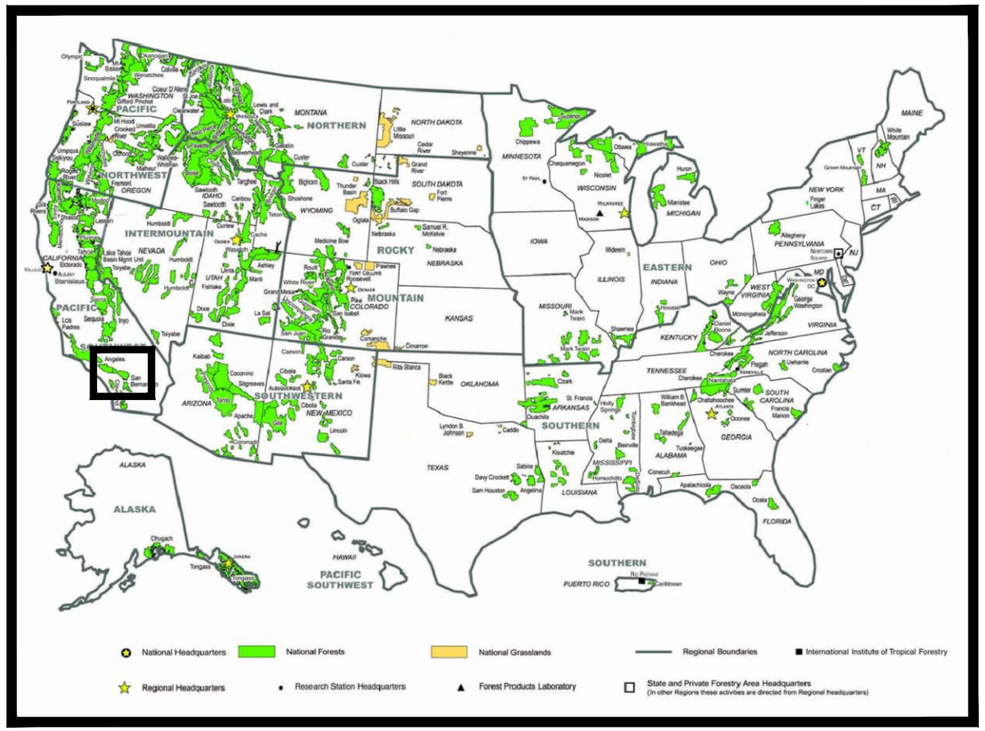

PROJECT LOCATION

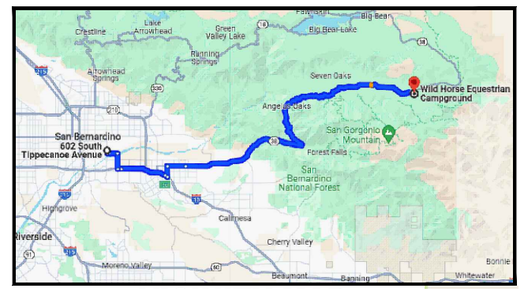

VICINITY MAP

TRAVEL DIRECTIONS:

DIRECTIONS FROM SAN BERNARDINO NF SUPERVISORS OFFICE
602 S TIPPECANOE AVE, SAN BERNARDINO, CA 92408
GET ON I-10 E IN LOMA LINDA FROM E CENTRAL AVE AND
MOUNTAIN VIEW AVE 8 MIN (2.9 MI)
HEAD SOUTH TOWARD S TIPPECANOE AVE 272 FT
TURN LEFT TOWARD S TIPPECANOE AVE 92 FT
TURN RIGHT AT THE 1ST CROSS STREET ONTO S TIPPECANOE AVE 0.2 MI
USE THE LEFT 2 LANES TO TURN LEFT ONTO E CENTRAL AVE 0.9 MI
TURN RIGHT ONTO MOUNTAIN VIEW AVE 1.4 MI
TURN LEFT TO MERGE ONTO I-10 E 0.4 MI
TAKE CA-38 E TO 1N02 IN ANGELUS OAKS 51 MIN (36.7 MI)
TURN RIGHT ONTO 1N02

LATITUDE: 34°09'43.8"N
LONGITUDE: 116°47'08.8"W

INDEX OF SHEETS

SHEET	SHEET TITLE	DATE
G-01	COVER SHEET	
G-02	VICINITY MAP	
G-03	ESTIMATE QUANTITIES	
G-04	GENERAL NOTES	
C-01-C-13	RECONSTRUCTION SUMMARIES	
D-01	AGGREGATE NOTES & DETAILS	
D-03	DITCHING & RIP-RAP DETAILS	
D-04	TEMPLATE, TYPICAL SECTION DETAILS	
D-05	ROLLING DRAINAGE DIP & NATURAL FORD DETAILS	
D-06	CULVERT INSTALLATION DETILS	
D-07	TYPICAL CULVERT DETAILS	
D-08	TYPICAL CULVERT DETAILS	
D-09	TYPICAL OVERSIDE DRAIN DETAILS	
D-10	OVERSIDE DRAIN INSTALLATION DETAILS	
D-11	CLEARING AND GRUBBING DETAIL	

RECOMMENDED BY:

CHRISTOPHER SOOHOO — Digitally signed by CHRISTOPHER SOOHOO Date: 2026.06.18 10:19:46 -07'00'
DESIGN ENGINEER — DATE

LUISA BANNISTER — Digitally signed by LUISA BANNISTER Date: 2026.06.22 10:20:05 -07'00'
FOREST ENGINEER — DATE

JOSHUA DIREEN — Digitally signed by JOSHUA DIREEN Date: 2026.06.18 11:15:25 -07'00'
DISTRICT RANGER — DATE

APPROVED:

FOREST SUPERVISOR — DATE

5/1/25 07:49 CSOOHOO C:\USERS\CSOOHOO\ONEDRIVE - USDA\DOCUMENTS\ROADS\FY25\ERF0\TS HILARY ERF0\1N02 AND 1N05\TS ROAD PLANS 05-06-2024_RECOVER.DWG;

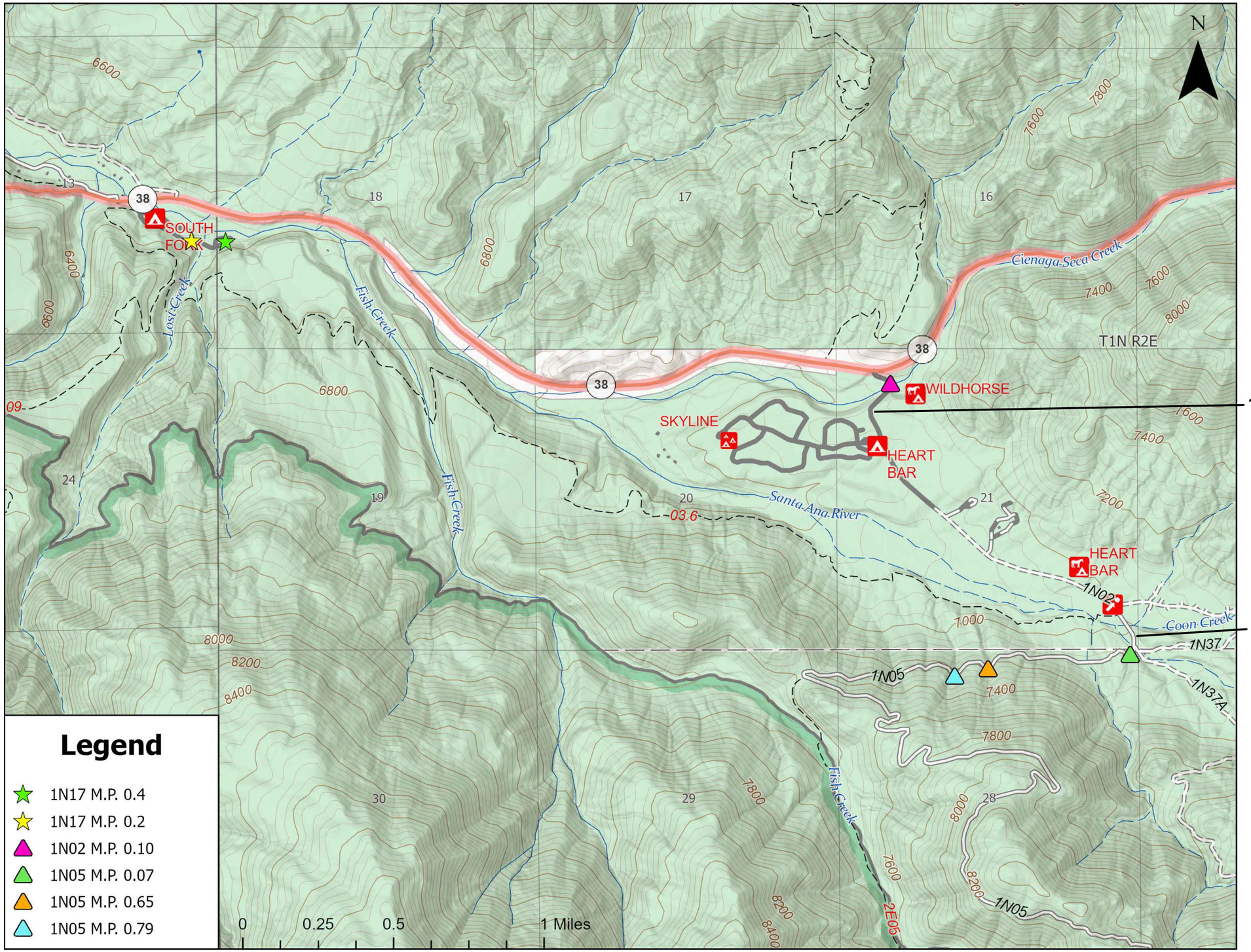

5/1/25 07:49 CSOOHOO C:\USERS\CSOOHOO\ONEDRIVE - USDA\DOCUMENTS\ROADS\FY25\ERFO\TS HILARY ERFO\1N02 AND 1N05\TS ROAD PLANS 05-06-2024_RECOVER.DWG;

United States Department of Agriculture
Forest Service

(R5)
PACIFIC SOUTHWEST REGION

PROJECT NAME

2023 CA FS TROPICAL STORM HILARY

SAN BERNARDINO NATIONAL FOREST

MOUNTAINTOP RANGER DISTRICT

DRAWING TITLE

VICINITY MAP

DATE
month/year

ARCHIVE NO.
ARCHIVE_NUMBER

DESIGNER
?

DRAWN
?

CHECKED
?

PROJECT NO.

DWG SHEET NO.
G-02

SHEET 2 OF 20

SUMMARY OF ESTIMATED QUANTITIES

PAY ITEM	DESCRIPTION	MEAS.	ROAD # / UNIT	1N02 M.P. 0.1	1N05 M.P. 0.07	1N05 M.P. 0.65	1N05 M.P. 0.79
15101	Mobilization	LSQ	L.S.	1	1	1	1
15713	Soil Erosion & Pollution Control	LSQ	L.S.	1	1	1	1
20158	Clearing and Debris Removal	LSQ	L.S.	1	1	1	1
20209	Selective clearing	LSQ	L.S.		1		
20406	Roadway Excavation	CQ	Mile		0.28		
20407	Select borrow, compaction method B, finish method A	CQ	C.Y.	1350	9200	139	59
20426	Grade dips, Rolling	CQ	Each		3	1	1
21201	Linear grading	CQ	Mile		0.28		
25102-5	Placed riprap, class 5	CQ	Ton	402			
25209	Geotextile, type IV, D	CQ	S.Y.	330			
30102	Aggregate Base Class 2	CQ	Ton	527			
30318	Road reconditioning, roadbed, compaction method 3	CQ	Mile	0.07			
40607	Asphalt Concrete, CA State DOT, Type A	CQ	Ton	133			
60101	Concrete Grout	CQ	C.Y.	45			
60601	Spillway assembly – 24" Overside Drain and 20' Flume	CQ	Each			1	1
	SERVICE LEVEL			3	3	3	3
	RECONSTRUCTION LENGTH (MILES)			0.07	0.28	0.01	0.01

CQ = CONTRACT QUANTITIES, AQ = ACTUAL QUANTITIES, LSQ = LUMP SUM QUANTITIES, SQ = STAKED QUANTITIES, VQ = VEHICLE QUANTITIES.

GENERAL NOTES:

1. REFER TO APPLICABLE SECTIONS OF "STANDARD SPECIFICATIONS FOR CONSTRUCTION OF ROAD AND BRIDGES ON FEDERAL HIGHWAY PROJECTS, (FP-14)," AND ATTACHED FOREST SERVICE FP-14 SUPPLEMENTAL SPECIFICATIONS (FSSS) FOR CONTRACT SPECIFICATIONS.
2. MAINTAIN ALL CONSTRUCTION STAKING ON THE PROJECT, UNTIL FINAL INSPECTION AND ACCEPTANCE.
3. AGGREGATE SHALL BE FROM A CERTIFIED WEED FREE SOURCE. PROVIDE CONTRACTING OFFICER WRITTEN NOTIFICATION OF PROPOSED MATERIAL SOURCE 30 DAYS PRIOR TO USE, AS REQUIRED IN FSSS 105.02(c).
4. CONSTRUCTION TOLERANCE D FOR ALL RECONSTRUCTION WORK.

United States Department of Agriculture
Forest Service

(R5)
PACIFIC SOUTHWEST REGION

PROJECT NAME

2023 CA FS TROPICAL STORM HILARY

SAN BERNARDINO NATIONAL FOREST

MOUNTAINTOP RANGER DISTRICT

DRAWING TITLE

SUMMARY OF ESTIMATED QUANTITIES

DATE
month/year

ARCHIVE NO.
ARCHIVE_NUMBER

DESIGNER
?

DRAWN
?

CHECKED
?

PROJECT NO.

DWG SHEET NO.
G-03

SHEET 3 OF 20

5/1/25 07:49 CSOOHOO C:\USERS\CSOOHOO\ONEDRIVE - USDA\DOCUMENTS\ROADS\FY25\ERFO\TS HILARY ERFO\1N02 AND 1N05\TS ROAD PLANS 05-06-2024_RECOVER.DWG;

GENERAL NOTES

CLEARING

CLEARING & GRUBBING: TREES MAY BE FELLED ON GOVERNMENT LAND OUTSIDE THE CLEARING LIMITS. TREATMENT OF SLASH SHALL BE BY METHOD F, SCATTERING. STUMPS SHALL BE POSITIONED SUCH THAT THEY WILL NOT ROLL ONTO ROADBED OR INTO ROAD DITCH. SLASH SHALL NOT BE DISPOSED OF (1) WITHIN ANY DEFINED STREAM CHANNEL OR (2) WITHIN ANY MARKED BOUNDARIES OF A PROTECTED STREAM. PROTECTED STREAMS ARE SHOWN ON SALE AREA MAP IN TIMBER SALE CONTRACT. A DEFINED STREAM CHANNEL IS ANY CONTINUOUS CHANNEL WHICH EXHIBITS EVIDENCE OF REGULAR ANNUAL SCOUR. EQUIPMENT SHALL NOT BE OPERATED WITHIN ANY STREAM CHANNEL EXCEPT AS ESSENTIAL IN CONSTRUCTION OF ROADS.

GRUBBING OF UNDISTURBED STUMPS IN EMBANKMENT AREAS IS NOT REQUIRED UNLESS THEY EXTEND MORE THAN 12" ABOVE THE ORIGINAL GROUND (MEASURED FROM THE UPHILL SIDE) OR ARE CLOSER THAN 24" TO THE FINISHED SUBGRADE OR 12" TO ANY SLOPE SURFACE.

NO MEASUREMENT SHALL BE MADE FOR CONSTRUCTION OF LOG LANDINGS, BUT THEY WILL BE CONSIDERED A SUBSIDIARY OBLIGATION BY THE CONTRACTOR.

UTILIZATION OF TIMBER: MERCHANTABLE TIMBER FROM GOVERNMENT LAND IS DEFINED AS THAT TIMBER MARKED WITH PAINT BOTH ON THE STUMP AND AT EYE LEVEL. TREES SHALL BE FELLED BY SAWING, SHEARING, OR BY PUSHING THE TREE OVER. ALL TREES SHALL BE CUT SO AS TO LEAVE A STUMP HEIGHT OF 12" OR LESS. THE LOG SHALL BE LIMBED AND TOPPED AT A POINT WHERE THE INSIDE BARK DIAMETER IS NO MORE THAN 3.5".

FOR PUBLIC WORKS CONTRACT: MERCHANTABLE TIMBER SHALL BE HAULED TREE LENGTH TO THE LOG DECK(S) SHOWN ON THE DRAWINGS. ALL MERCHANTABLE TIMBER SHALL BE DECKED NO MORE THAN 10 CALENDER DAYS AFTER FELLING. DECKED LOGS SHALL BE STACKED PARALLEL WITH ALL BUTT ENDS FACING THE SAME DIRECTION AND STACKED A MINIMUM OF 6 LOGS HIGH. THESE STACKS SHALL BE PARALLEL TO THE ROAD WITH THE BUTTS POINTED IN THE DIRECTION OF HAUL. THERE MUST BE ROOM ON THE DECK AT THE BUTTEND OF LOGS, FOR A LOADER TO OPERATE SAFELY AND EFFICIENTLY. THE ROAD CONTRACTOR SHALL PROVIDE THE TIMBER PURCHASER ACCESS TO THE LOG DECK(S) SHOWN ON THE DRAWINGS FOR THE PURPOSE OF REMOVING THE RIGHT-OF-WAY TIMBER. BY MUTUAL AGREEMENT BETWEEN THE CONTRACTOR AND THE TIMBER PURCHASER, ALL FELLED TIMBER MEETING UTILIZATION STANDARDS MAY BE MADE AVAILABLE TO THE TIMBER PURCHASER IN LENGTHS AND AT LOCATIONS WITHIN THE CONSTRUCTION LIMITS AS AGREED TO BETWEEN THE TWO PARTIES. THE TIMBER PURCHASER MUST RECEIVE WRITTEN APPROVAL FROM THE FOREST SERVICE PRIOR TO REMOVAL OF ANY TIMBER. NOTHING HEREIN SHALL BE CONSTRUED AS RELIEVING THE CONTRACTOR OF ANY RESPONSIBILITY FOR REPAIRING, AT HIS EXPENSE, DAMAGES THAT MAY OCCUR AS A RESULT OF HIS AUTHORIZING THE TIMBER PURCHASER USE OF THE ROAD FOR REMOVAL OF RIGHT-OF-WAY TIMBER PRIOR TO FINAL ACCEPTANCE BY THE GOVERNMENT.

EXCAVATION

CONSTRUCTION TOLERANCES: ALL DITCHES AND DRAINAGE DIPS SHALL BE CONSTRUCTED TO FLOW IN THE DIRECTION SHOWN ON THE DRAWINGS OR DESIGNATED ON THE GROUND. STUMP HOLES WITHIN OR ADJACENT TO THE ROADBED SHALL BE BACKFILLED TO PREVENT PONDING OF WATER. FILL SLOPES, WITHIN 50' OF PIPES OR WHERE THE DEPTH OF FILL IS MORE THAN 5' SHALL NOT BE STEEPER THAN SHOWN ON TYPICAL SECTIONS. IN OTHER AREAS, FILL SLOPES MAY BE NO MORE THAN 10% STEEPER THAN SHOWN. TOLERANCE CLASS (E).

SEEDING & MULCHING

SEEDING AND MULCHING SHALL BE COMPLETED ON ALL REQUIRED AREAS OF INDIVIDUAL ROADS WITHIN 10 DAYS AFTER EXCAVATION FOR THE ROAD IS COMPLETED.

BORROW

UNLESS OTHERWISE NOTED BORROW MATERIAL IS NOT AVAILABLE ON SITE AND SHALL BE OBTAINED FROM PRIVATE SOURCES

- NOTE W20-3

ONE 36"X36" W20-3 (PER MUTCD & S.H.S [STANDARD HIGHWAY SIGNS]) MOVABLE CONSTRUCTION SIGN WILL BE REQUIRED AT EACH END OF THE CONSTRUCTION ZONE TO NOTIFY THE PUBLIC DURING CONSTRUCTION ACTIVITIES. THE SIGNS SHALL BE MOUNTED A MINIMUM OF 12" ABOVE THE GROUND, AND SHALL BE PLACED WITHIN 500 FEET OF EACH CONSTRUCTION ZONE END. IF THE ROAD DEAD ENDS OR PUBLIC USE HAS BEEN OBSTRUCTED, ONLY ONE W20-3 WILL BE REQUIRED. THE ROAD SHALL NOT BE CLOSED FOR MORE THAN 2-HOURS WHEN USING THE W20-3. IF THE ROAD IS CLOSED FOR MORE THAN 2-HOURS LIMIT A TYPE III MOVABLE BARRICADE WILL BE REQUIRED IN LIEU OF THE W20-3.

- NOTE TYPE III

ONE TYPE III MOVABLE BARRICADE WILL BE REQUIRED TO COMPLETELY CLOSE EACH 8' OF TRAVELED WAY WIDTH. SIGNS SHALL OBSCURE NO MORE THAN 50 PERCENT OF THE TOP 2 RAILS OR 33 PERCENT OF ALL THREE RAILS. SIGNS SHALL BE MOUNTED A MINIMUM OF 12" ABOVE THE GROUND. WHERE A BARRICADE ARRAY EXTENDS ACROSS A ROADWAY, THE STRIPES SHALL SLOPE DOWNWARD IN THE DIRECTION TOWARD WHICH TRAFFIC MUST TURN OR PASS. WHERE BOTH RIGHT AND LEFT VEHICULAR MOVEMENTS ARE PROVIDED, THE STRIPES SHALL SLOPE DOWNWARD IN BOTH DIRECTIONS FROM THE CENTER OF THE BARRICADE ARRAY. WHERE NO VEHICULAR MOVEMENTS ARE PROVIDED, THE STRIPES SHALL SLOPE DOWNWARD TOWARD THE CENTER OF THE BARRICADE ARRAY. PAY FOR EITHER SIGN IS INCIDENTAL TO PAY ITEM 15101

W20-3 MOVABLE BARRICADE

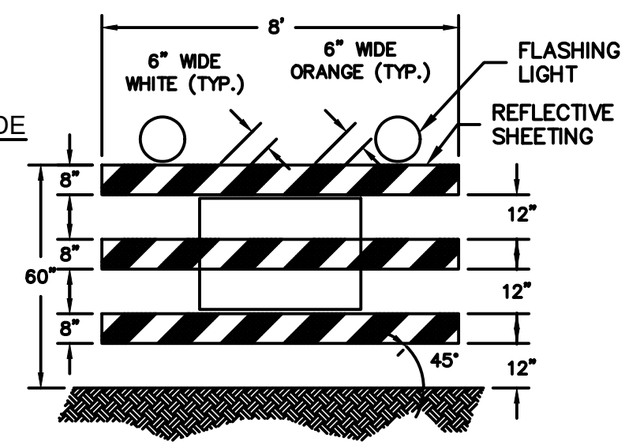

TYPE III MOVABLE BARRICADE

United States Department of Agriculture
Forest Service

(R5)
PACIFIC SOUTHWEST REGION

PROJECT NAME

2023 CA FS TROPICAL STORM HILARY

SAN BERNARDINO NATIONAL FOREST

MOUNTAINTOP RANGER DISTRICT

DRAWING TITLE

GENERAL NOTES

DATE
month/year

ARCHIVE NO.
ARCHIVE_NUMBER

DESIGNER
?

DRAWN
?

CHECKED
?

PROJECT NO.

DWG SHEET NO.
G-04

SHEET 4 OF 20

5/1/25 07:49 CSOOHOO C:\USERS\CSOOHOOONEDRIVE - USDA\DOCUMENTS\ROADS\FY25\ERFO\TS HILARY ERFO\1N02 AND 1N05\TS ROAD PLANS 05-06-2024_RECOVER.DWG;

NFSR 1N02 SITE #2
M.P. 0.15

NFSR 1N02 SITE #1
M.P. 0.10

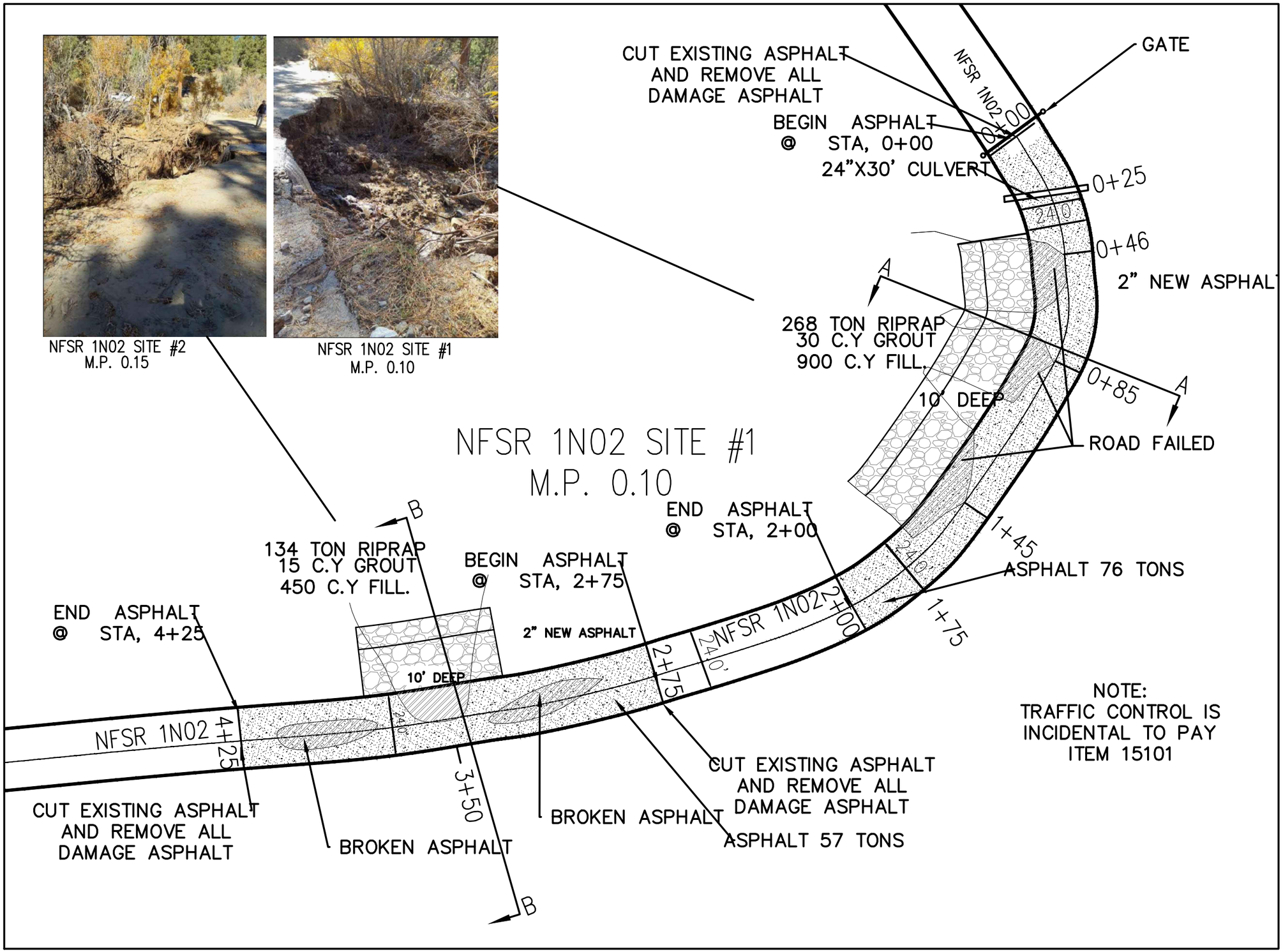

USDA FOREST SERVICE

United States Department of Agriculture
Forest Service

(R5)
PACIFIC SOUTHWEST REGION

PROJECT NAME

2023 CA FS TROPICAL
STORM HILARY

SAN BERNARDINO
NATIONAL FOREST

MOUNTAINTOP RANGER
DISTRICT

DRAWING TITLE

CONSTRUCTION DIAGRAM
NFSR 1N02 M.P. 0.10

DATE month/year	
ARCHIVE NO. ARCHIVE_NUMBER	
DESIGNER ?	DWG SHEET NO. C-01
DRAWN ?	
CHECKED ?	
PROJECT NO.	SHEET 5 OF 20

5/1/25 07:49 CSOOHOO C:\USERS\CSOOHOO\ONEDRIVE - USDA\DOCUMENTS\ROADS\FY23\ERFO\TS HILARY ERFO\1N02 AND 1N05\TS ROAD PLANS 05-06-2024_RECOVER.DWG;

REMOVE ALL DEBRIS AND UNSUITABLE MATERIAL IN CREEK
CUT EXISTING ASPHALT AND REMOVE ALL DAMAGE ASPHALT.
DEBRIS TO BE REMOVED OFF FOREST.
SELECT FILL 900 C.Y.
ROAD RECONSTRUCTION 200 FEET
CRUSHED AGGREGATE BASE 29 (AREA MEASURED FROM CAD DESIGN) X 200' = 5800 C.F / 27 = 215 C.Y. X 1.4 = 301 TONS
2" ASPHALT FOR STA, 0+00–2+00 24' X 200' X 0.167' = 802 C.F. /27 = 30 C.Y. X 2.025 = 60.12 TONS X 1.25 (COMPACTION) = 76 TONS A)
RIP–RAP 268 TONS
GROUT 30 C.Y.
GEO–TEXTILE 220 SY

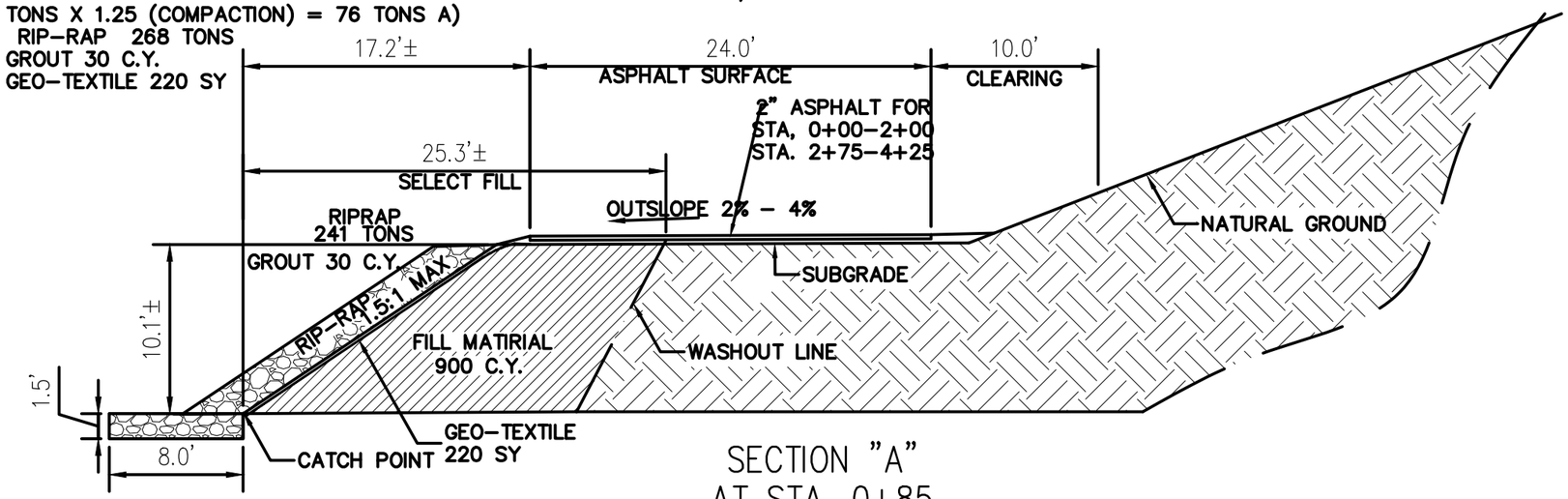

SECTION "A"
AT STA. 0+85

REMOVE ALL DEBRIS AND UNSUITABLE MATERIAL IN CREEK
CUT EXISTING ASPHALT AND REMOVE ALL DAMAGE ASPHALT.
DEBRIS TO BE REMOVED OFF FOREST.
SELECT FILL 450 C.Y.
ROAD RECONSTRUCTION 150 FEET
CRUSHED AGGREGATE BASE 29 X 150' = 4350 C.F / 27 = 161 C.Y. X 1.4 = 226 TONS
2" ASPHALT FOR STA, 2+75–4+25 24' X 150' X 0.167' = 601.2 C.F. /27 = 22.27 C.Y. X 2.025 = 45.09 TONS X 1.25 (COMPACTION) = 57 TONS
RIP–RAP 134 TONS
GROUT 15 C.Y.
GEO–TEXTILE 110 SY

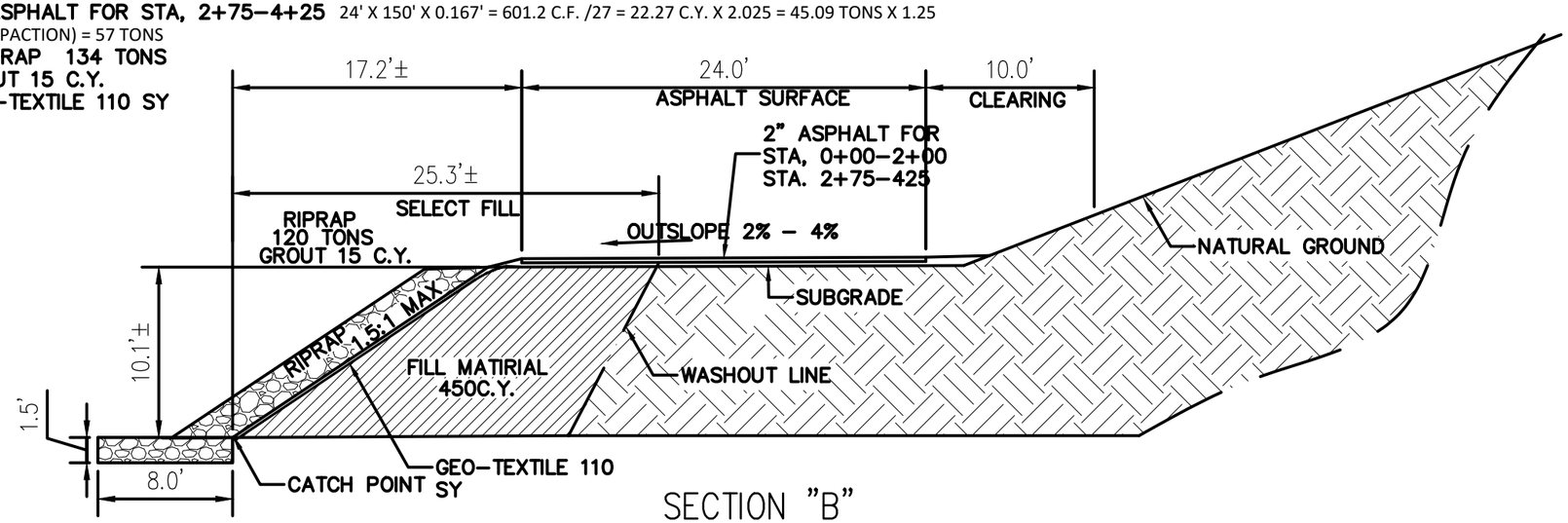

SECTION "B"
AT STA. 3+50

United States Department of Agriculture
Forest Service

(R5)
PACIFIC SOUTHWEST REGION

PROJECT NAME

2023 CA FS TROPICAL STORM HILARY

SAN BERNARDINO NATIONAL FOREST

MOUNTAINTOP RANGER DISTRICT

DRAWING TITLE

CONSTRUCTION DIAGRAM
NFSR 1N02 M.P. 0.10

DATE
month/year

ARCHIVE NO.
ARCHIVE_NUMBER

DESIGNER
?

DRAWN
?

CHECKED
?

PROJECT NO.

DWG SHEET NO.
C-02

SHEET 6 OF 20

5/1/25 07:49 CSOOHOO C:\USERS\CSOOHOO\ONEDRIVE - USDA\DOCUMENTS\ROADS\FY25\ERFO\TS HILARY ERFO\1N02 AND 1N05\TS ROAD PLANS 05-06-2024_RECOVER.DWG;

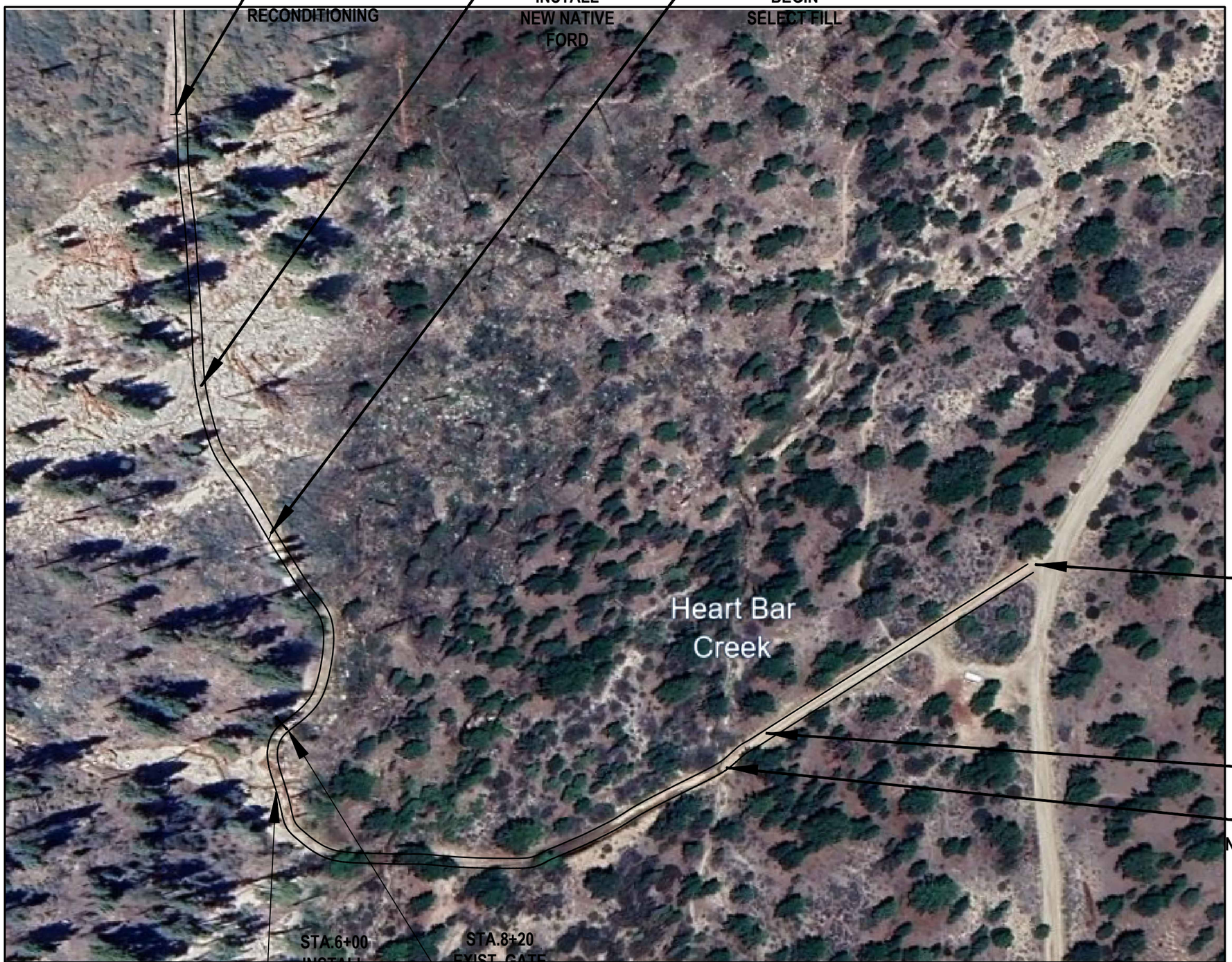

5/1/25 07:49 CSOOHOO C:\USERS\CSOOHOO\ONEDRIVE - USDA\DOCUMENTS\ROADS\FY25\ERFO\TS HILARY ERFO\1N02 AND 1N05\TS ROAD PLANS 05-06-2024_RECOVER.DWG;

United States Department of Agriculture
Forest Service

(R5)
PACIFIC SOUTHWEST REGION

PROJECT NAME

2023 CA FS TROPICAL
STORM HILARY

SAN BERNARDINO
NATIONAL FOREST

MOUNTAINTOP RANGER
DISTRICT

DRAWING TITLE

CONSTRUCTION DIAGRAM
NFSR 1N05 M.P. 0.07

DATE
month/year

ARCHIVE NO.
ARCHIVE_NUMBER

DESIGNER
?

DRAWN
?

CHECKED
?

PROJECT NO.

DWG SHEET NO.
C-06

SHEET 7 OF 20

United States Department of Agriculture
Forest Service

(R5)
PACIFIC SOUTHWEST REGION

PROJECT NAME

2023 CA FS TROPICAL STORM HILARY

SAN BERNARDINO NATIONAL FOREST

MOUNTAINTOP RANGER DISTRICT

DRAWING TITLE

CONSTRUCTION DIAGRAM
NFSR 1N05 M.P. 0.65 & 0.79

DATE
month/year

ARCHIVE NO.
ARCHIVE_NUMBER

DESIGNER
?

DRAWN
?

CHECKED
?

PROJECT NO.

DWG SHEET NO.
C-07

SHEET 8 OF 20

5/1/25 07:49 CSOOHOO C:\USERS\CSOOHOO\ONEDRIVE - USDA\DOCUMENTS\ROADS\FY25\ERFO\TS HILARY ERFO\1N02 AND 1N05\TS ROAD PLANS 05-06-2024_RECOVER.DWG;

NOTE:
1. LINEAR REPRESENTATION ONLY.
2. DEBRIS REMOVE PAY ITEM 20158
3. TRAFFIC CONTROL IS INCIDENTAL TO PAY ITEM 15101

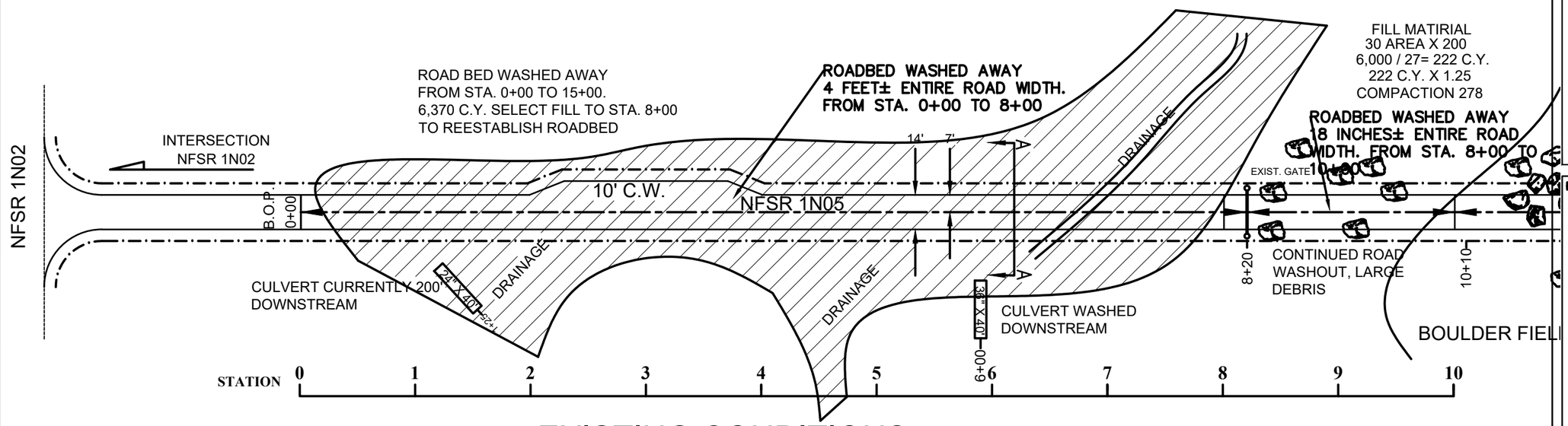

EXISTING CONDITIONS

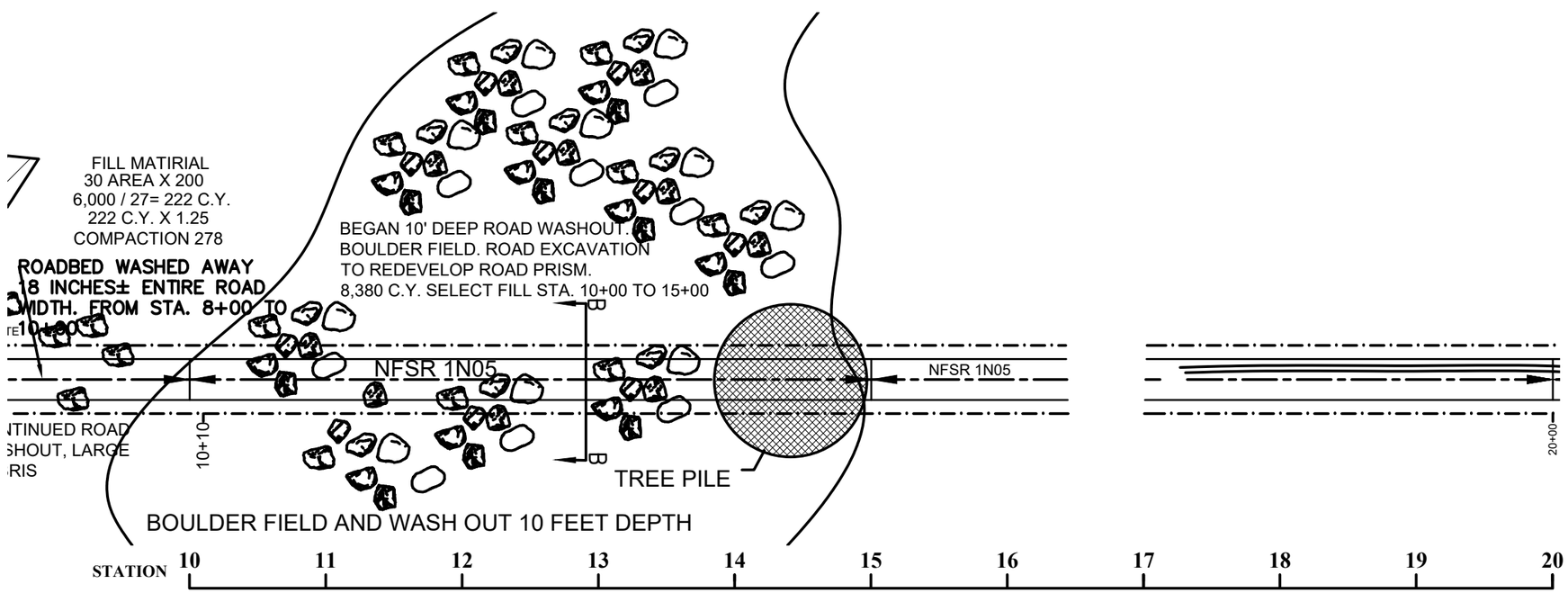

EXISTING CONDITIONS

United States Department of Agriculture
Forest Service

(R5)
PACIFIC SOUTHWEST REGION

PROJECT NAME

2023 CA FS TROPICAL STORM HILARY

SAN BERNARDINO NATIONAL FOREST

MOUNTAINTOP RANGER DISTRICT

DRAWING TITLE

CONSTRUCTION DIAGRAM
NFSR 1N05 M.P. 0.07

DATE
month/year

ARCHIVE NO.
ARCHIVE_NUMBER

DESIGNER
?

DRAWN
?

CHECKED
?

PROJECT NO.

DWG SHEET NO.
C-08

SHEET 9 OF 20

5/1/25 07:49 CSOOHOO C:\USERS\CSOOHOO\ONEDRIVE - USDA\DOCUMENTS\ROADS\FY25\ERFO\ITS HILARY ERFO\1N02 AND 1N05\ITS ROAD PLANS 05-06-2024_RECOVER.DWG;

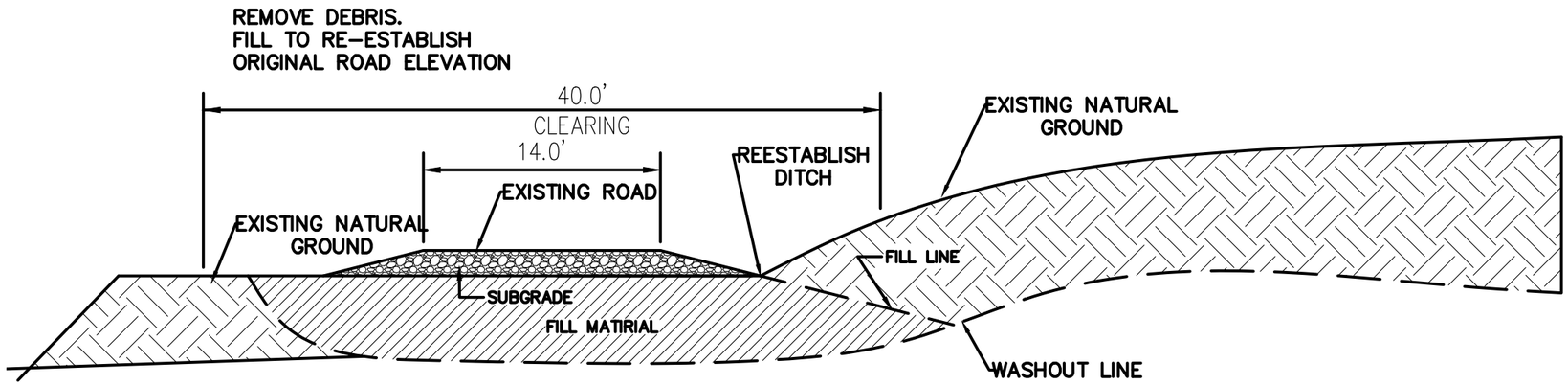

SECTION "A"
AT STA. 0+00-8+00
EXISTING & PROPOSED

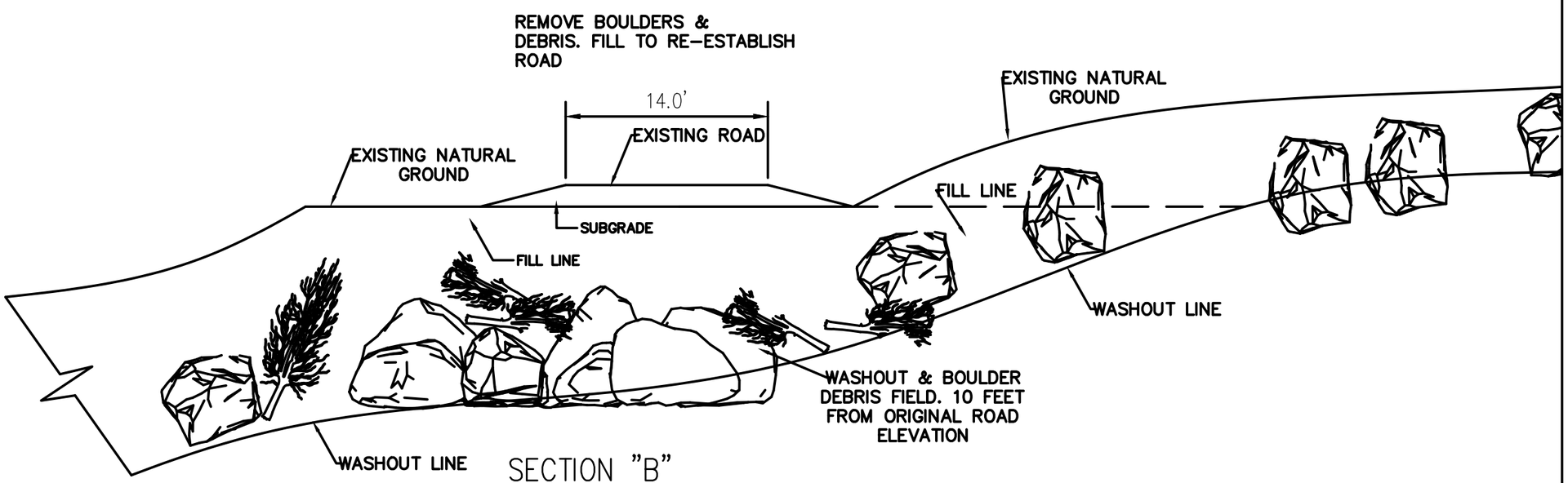

SECTION "B"
AT STA. 10+00-15+00
EXISTING

United States Department of Agriculture
Forest Service

(R5)
PACIFIC SOUTHWEST REGION

PROJECT NAME

2023 CA FS TROPICAL
STORM HILARY

SAN BERNARDINO
NATIONAL FOREST

MOUNTAINTOP RANGER
DISTRICT

DRAWING TITLE

CONSTRUCTION DIAGRAM
NFSR 1N05 M.P. 0.07

DATE
month/year

ARCHIVE NO.
ARCHIVE_NUMBER

DESIGNER
?

DRAWN
?

CHECKED
?

PROJECT NO.

DWG SHEET NO.
C-09

SHEET 10 OF 20

5/1/25 07:49 CSOOHOO C:\USERS\CSOOHOO\ONEDRIVE - USDA\DOCUMENTS\ROADS\FY25\ERFO\TS HILARY ERFO\1N02 AND 1N05\TS ROAD PLANS 05-06-2024_RECOVER.DWG;

NOTE:
1. LINEAR REPRESENTATION ONLY.
2. DEBRIS REMOVE PAY ITEM 20158
3. TRAFFIC CONTROL IS INCIDENTAL TO PAY ITEM 15101

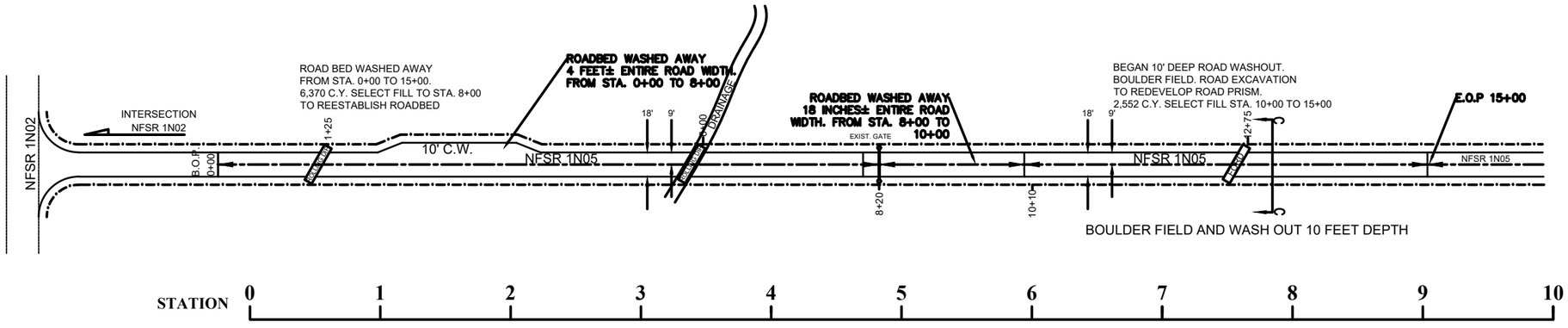

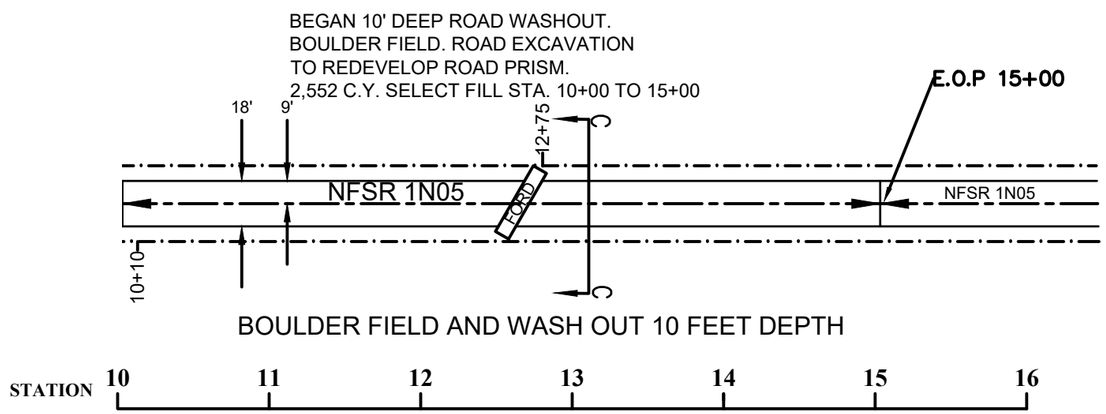

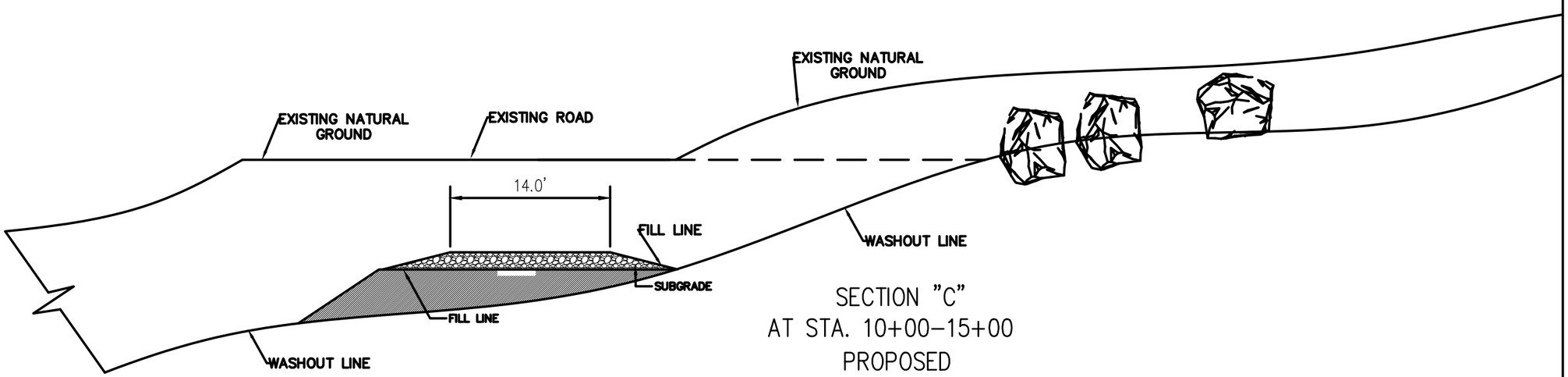

SECTION "C"
AT STA. 10+00–15+00
PROPOSED

United States Department of Agriculture
Forest Service

(R5)
PACIFIC SOUTHWEST REGION

PROJECT NAME

2023 CA FS TROPICAL STORM HILARY

SAN BERNARDINO NATIONAL FOREST

MOUNTAINTOP RANGER DISTRICT

DRAWING TITLE

CONSTRUCTION DIAGRAM
NFSR 1N05 M.P. 0.07

DATE
month/year

ARCHIVE NO.
ARCHIVE_NUMBER

DESIGNER
?

DRAWN
?

CHECKED
?

PROJECT NO.

DWG SHEET NO.
C-10

SHEET 11 OF 20

5/1/25 07:49 CSOOHOO C:\USERS\CSOOHOO\ONEDRIVE - USDA\DOCUMENTS\ROADS\FY25\ERFO\TS HILARY ERFO\1N02 AND 1N05\TS ROAD PLANS 05-06-2024_RECOVER.DWG;

NOTE:
1. LINEAR REPRESENTATION ONLY.

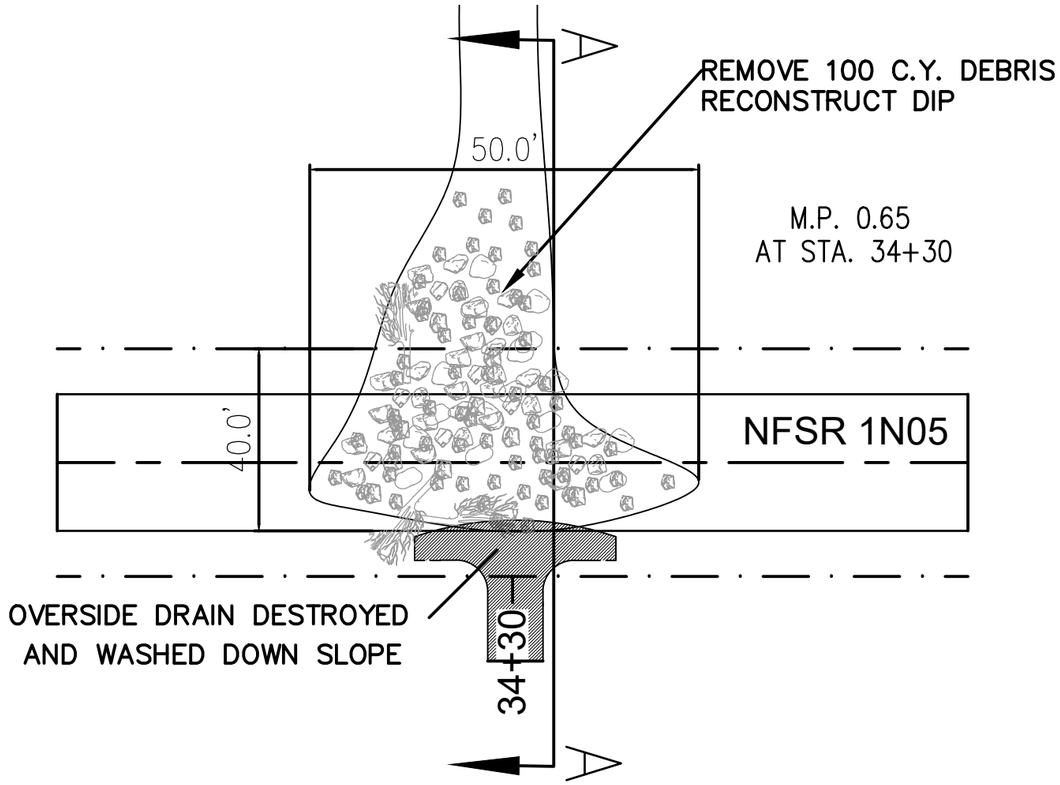

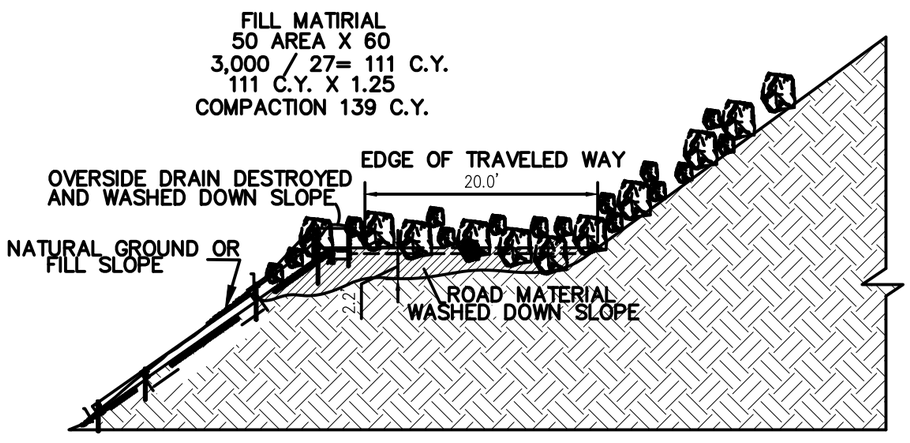

SECTION "A"
AT STA. 34+30
DAMAGE

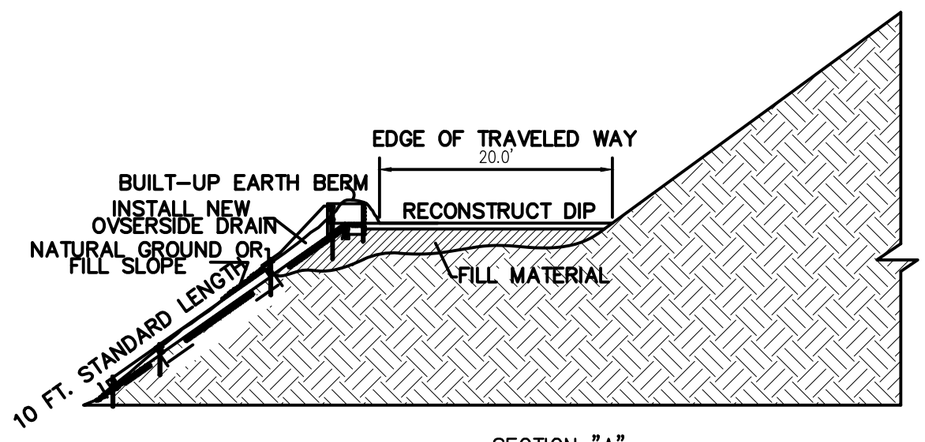

SECTION "A"
AT STA. 34+30
PROP. REPAIR

United States Department of Agriculture
Forest Service

(R5)
PACIFIC SOUTHWEST REGION

PROJECT NAME

2023 CA FS TROPICAL
STORM HILARY

SAN BERNARDINO
NATIONAL FOREST

MOUNTAINTOP RANGER
DISTRICT

DRAWING TITLE

CONSTRUCTION DIAGRAM
NFSR 1N05 M.P. 0.65

DATE
month/year

ARCHIVE NO.
ARCHIVE_NUMBER

DESIGNER
?

DRAWN
?

CHECKED
?

PROJECT NO.

DWG SHEET NO.
C-11

SHEET 12 OF 20

5/1/25 07:49 CSOOHOO C:\USERS\CSOOHOO\ONEDRIVE - USDA\DOCUMENTS\ROADS\FY25\ERFO\TS HILARY ERFO\1N02 AND 1N05\TS ROAD PLANS 05-06-2024_RECOVER.DWG;

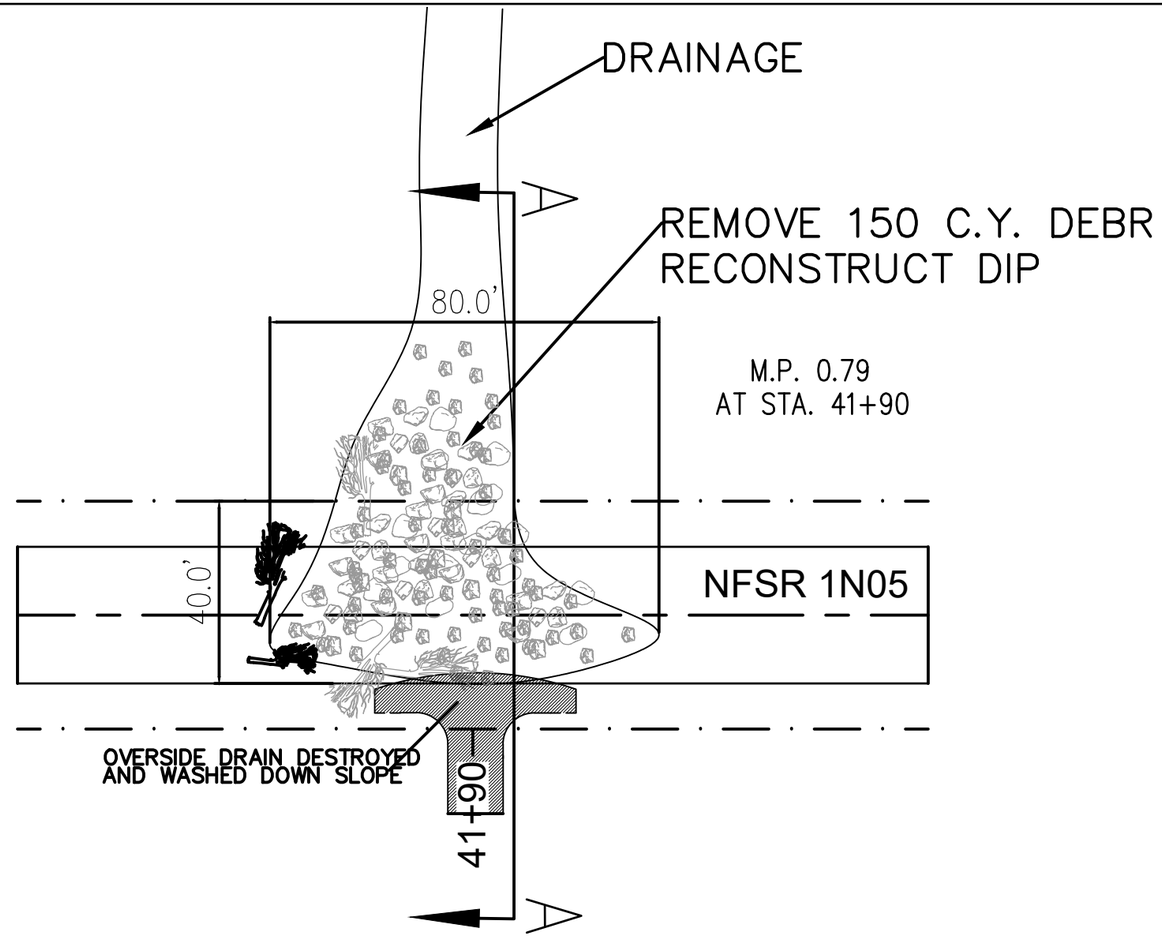

FILL MATIRIAL
21 AREA X 60
1,260 / 27= 47 C.Y.
47 C.Y. X 1.25
COMPACTION 59 C.Y.

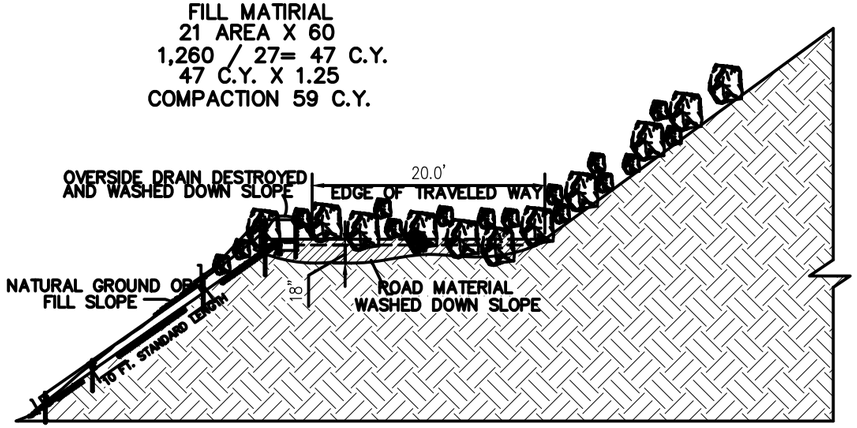

SECTION "A"
AT STA. 41+90
DAMAGE

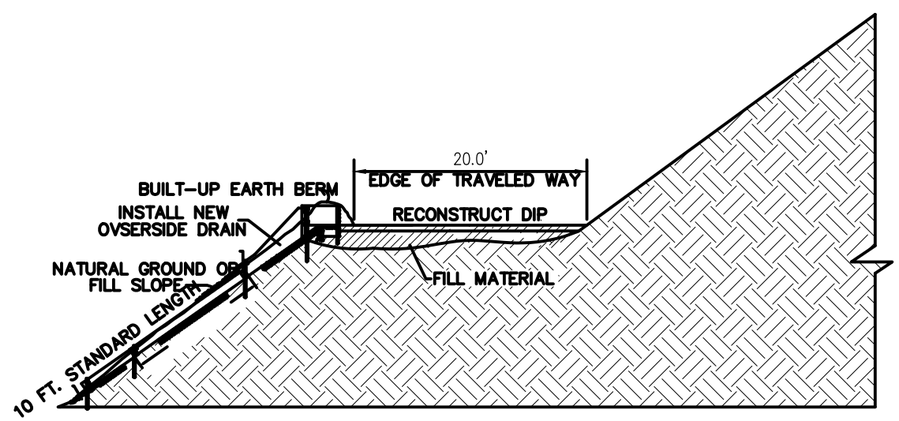

SECTION "A"
AT STA. 41+90
PROP. REPAIR

United States Department of Agriculture
Forest Service

(R5)
PACIFIC SOUTHWEST REGION

PROJECT NAME

2023 CA FS TROPICAL
STORM HILARY

SAN BERNARDINO
NATIONAL FOREST

MOUNTAINTOP RANGER
DISTRICT

DRAWING TITLE

CONSTRUCTION DIAGRAM
NFSR 1N05 M.P. 0.79

DATE
month/year

ARCHIVE NO.
ARCHIVE_NUMBER

DESIGNER
?

DRAWN
?

CHECKED
?

PROJECT NO.

DWG SHEET NO.
C-12

SHEET 13 OF 20

5/1/25 07:49 CSOOHOO C:\USERS\CSOOHOO\ONEDRIVE - USDA\DOCUMENTS\ROADS\FY25\ERF01\TS HILARY ERF01\N02 AND 1N05\TS ROAD PLANS 05-06-2024_RECOVER.DWG;

TURNAROUND, RAMP, TURNOUT, AND DOUBLE LANE DETAILS

N.T.S.

NOTE:-ROAD WITH AGGREGATE :

- AGGREGATE QUANTITIES ARE COMPACTED IN PLACE VOLUMES.
- AGGREGATE QUANTITIES INCLUDE MATERIAL FOR FULL WIDTH OF CURVE WIDENING, RAMPS, INTERSECTIONS, AND DIPS.
- UNLESS OTHERWISE NOTED, AGGREGATE IS NOT AVAILABLE ONSITE AND APPRAISED FROM PRIVATE SOURCES.

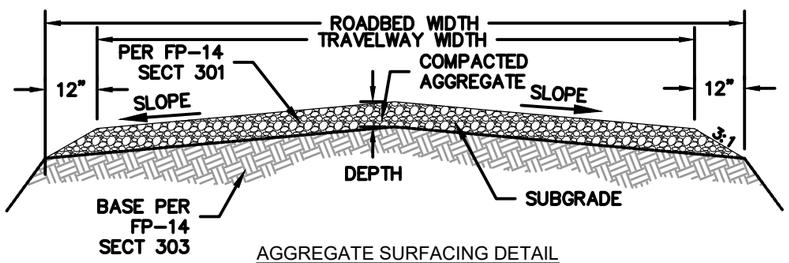

AGGREGATE SURFACING DETAIL

N.T.S.

CRUSHED AGGREGATE 4" DEEP
SCREENED AGGREGATE 4" DEEP
PIT RUN AGGREGATE 6" DEEP
NF AGGREGATE 12" DEEP UNLESS OTHER WISE NOTED ON DRAWINGS

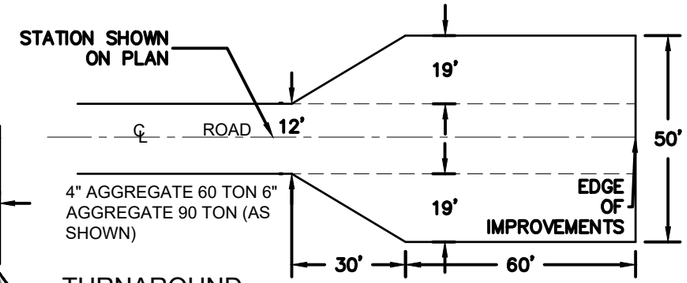

TURNAROUND

NOT TO SCALE

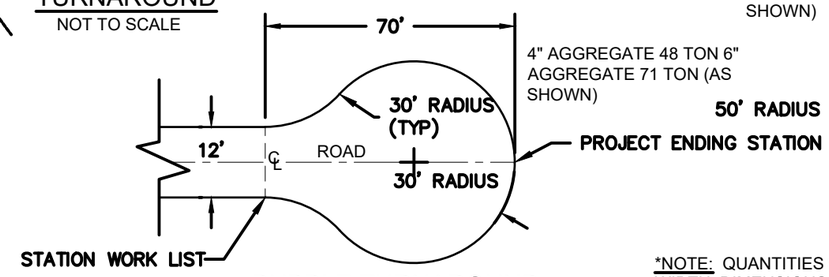

BUBBLE TURNAROUND

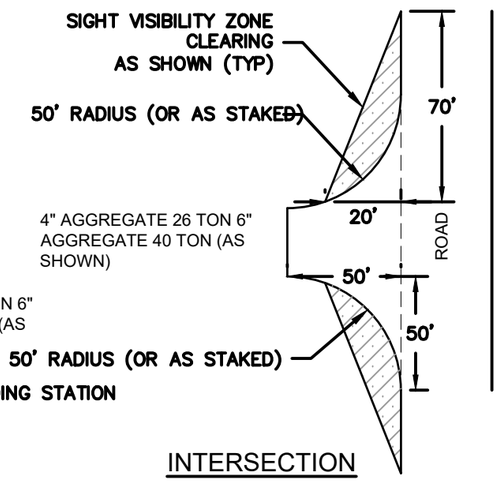

INTERSECTION

*NOTE: QUANTITIES SHOWN ARE BASED UPON A 12' TRAVELED WAY WIDTH. DIMENSIONS SHOWN ARE TRAVELED WAY

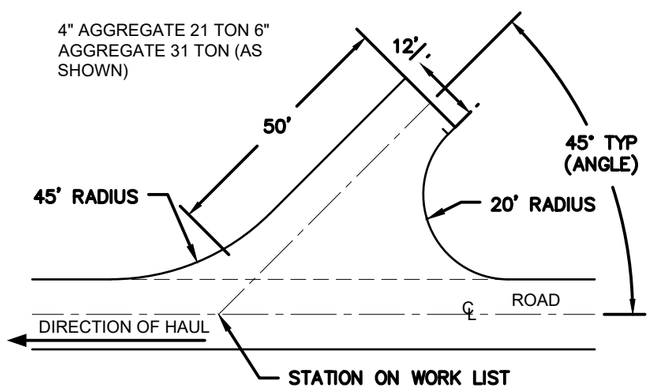

SKEWED RAMP

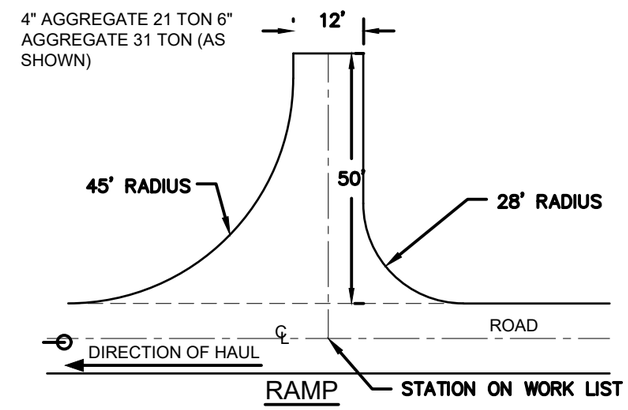

RAMP

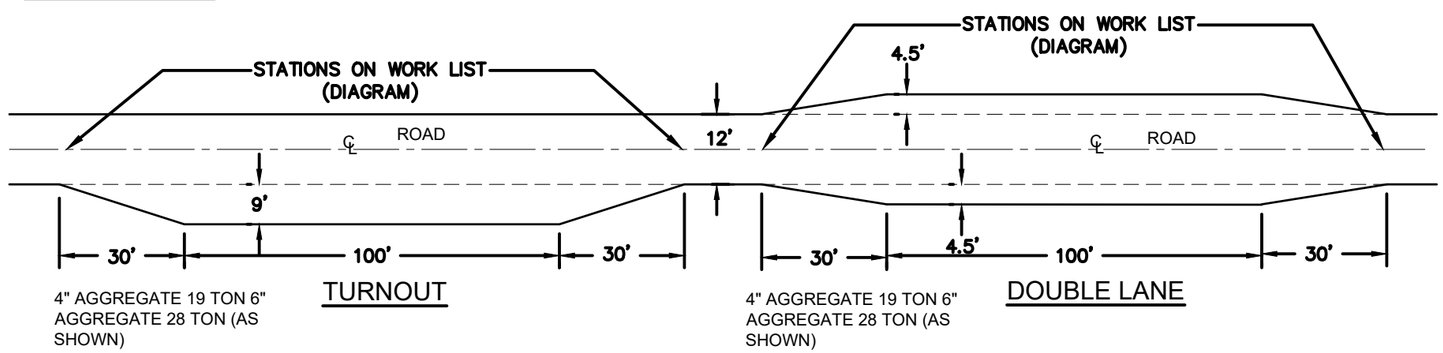

TURNOUT

DOUBLE LANE

United States Department of Agriculture
Forest Service

(R5)
PACIFIC SOUTHWEST REGION

PROJECT NAME

2023 CA FS TROPICAL STORM HILARY

SAN BERNARDINO NATIONAL FOREST

MOUNTAINTOP RANGER DISTRICT

DRAWING TITLE

AGGREGATE NOTES & DETAILS

DATE
month/year

ARCHIVE NO.
ARCHIVE_NUMBER

DESIGNER
?

DRAWN
?

CHECKED
?

PROJECT NO.

DWG SHEET NO.
D-01

SHEET 14 OF 20

5/1/25 07:49 CSOOHOO C:\USERS\CSOOHOO\ONEDRIVE - USDA\DOCUMENTS\ROADS\FY23\ERFO\TS HILARY ERFO\1N02 AND 1N05\TS ROAD PLANS 05-06-2024_RECOVER.DWG;

DITCHING DETAILS

N.T.S.

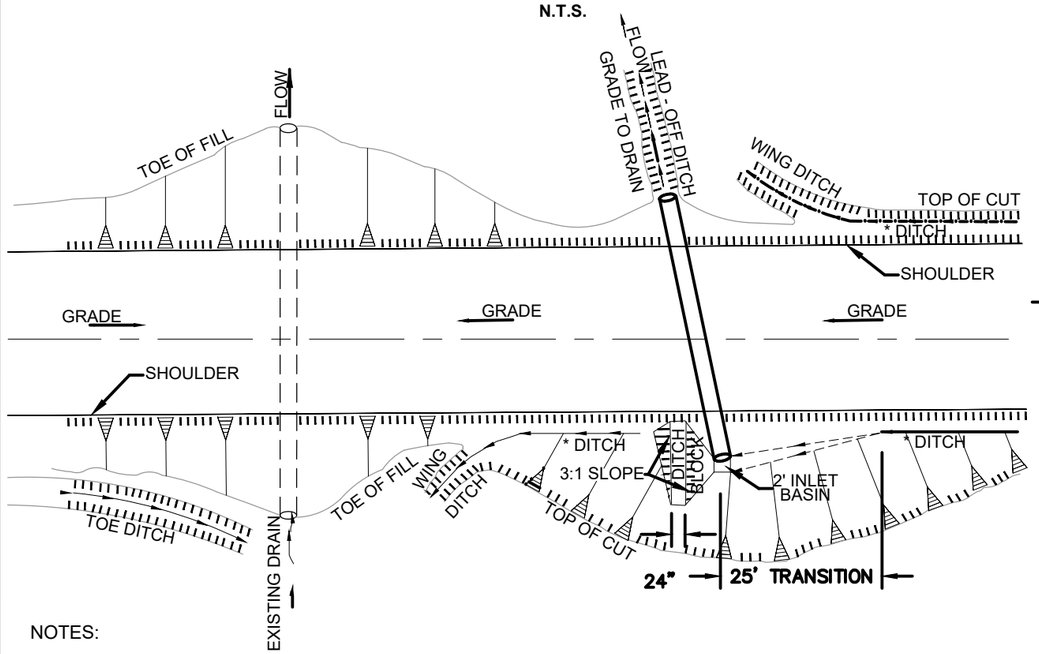

NOTES:

1. THE SLOPE OF LEAD-OFF DITCHES SHALL BE CONSTRUCTED TO A MINIMUM OF -1% FOR A MINIMUM OF 50'.
2. DITCH BLOCK WILL NOT BE REQUIRED WHEN INLET BASIN IS IN A SAG.
3. DITCH BLOCK ELEVATION SHALL BE 4" LOWER THAN THE ADJACENT SUBGRADE ELEVATION.
4. DITCHES SHALL BE CONSTRUCTED AT LOCATIONS SHOWN.
5. * ROADWAY DITCH AS SHOWN ON TYPICAL SECTIONS.

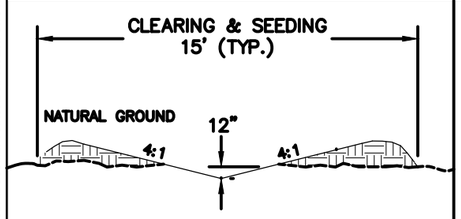

LEAD OFF DITCH

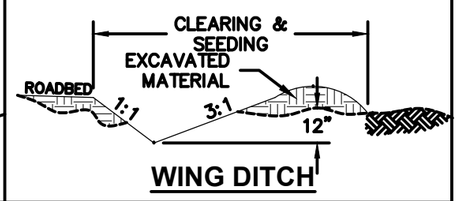

WING DITCH

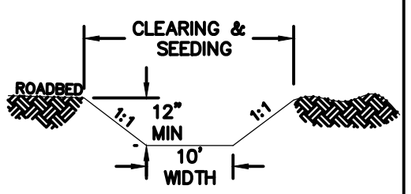

FLAT BOTTOM DITCH

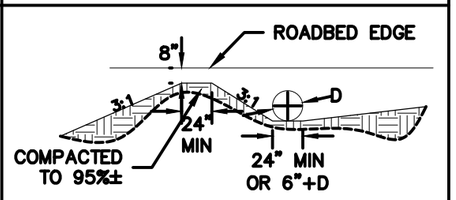

DITCH BLOCK

RIPRAP DETAIL

NTS

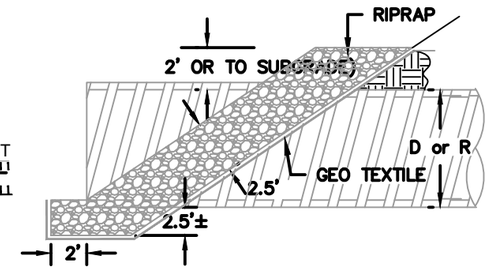

INLET SECTION VIEW

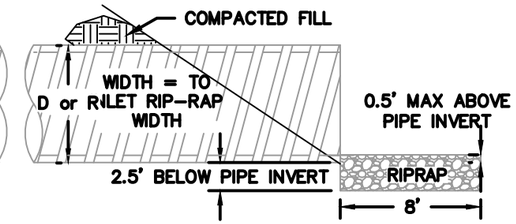

OUTLET SECTION VIEW

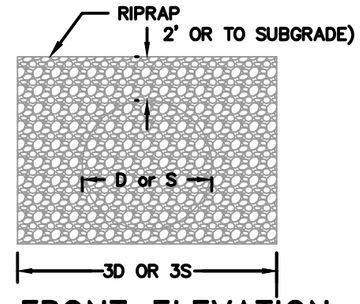

FRONT ELEVATION

SINGLE BARREL CULVERT

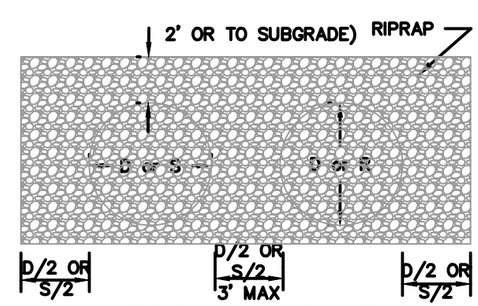

FRONT ELEVATION

DOUBLE BARREL CULVERT

NOTES:

1. SECTION VIEW APPLIES WHERE RIPRAP IS REQUIRED WITH OR WITHOUT CULVERT INSTALLATIONS. WHERE CULVERTS ARE REQUIRED SEE FRONT ELEVATIONS FOR LENGTH. WHERE CULVERTS ARE NOT REQUIRED RIPRAP SHALL BE PLACED TO SUBGRADE ELEVATION FOR LENGTH SHOWN ON THE PLAN.
2. RIPRAP CLASS 3, PLACEMENT METHOD A IS REQUIRED. GRADATION SHALL BE AS REQUIRED IN STANDARD SPECIFICATION TABLE 705-1, WHICH IS AS FOLLOWS:

PERCENT OF ROCK EQUAL OR SMALLER BY COUNT, Dx	WEIGHT (POUNDS)	RANGE OF INTERMEDIATE DIMENSIONS (INCHES)
100	750-1600	21-27
85	270-560	15-19
50	110-220	11-14
15	42-81	8-10

3. D = DIAMETER FOR ROUND PIPE, R & S = RISE AND SPAN FOR PIPE ARCH.
4. FOR MULTIPLE PIPE INSTALLATIONS, RIPRAP WILL BE CONTINUOUS BETWEEN BARRELS.
5. GEOTEXTILES SHALL BE PLACED UNDER RIPRAP IN ALL INSTALLATIONS AND SHALL MEET THE REQUIREMENTS FOR TYPE IV-D OF SECTION 714.01 OF THE SPECIFICATIONS. GEOTEXTILE SHALL BE NONWOVEN. PAYMENT FOR GEOTEXTILES IS INCLUDED IN PAY ITEM 251.16.
6. IN NARROW CHANNELS, ADJUST ROCK TO FIT STREAMBANKS.

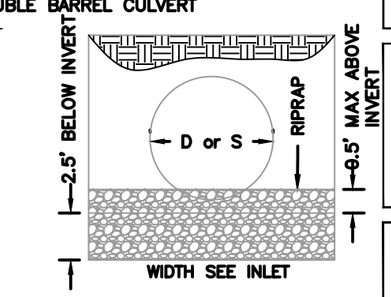

OUTLET ELEVATION

SINGLE BARREL CULVERT

United States Department of Agriculture
Forest Service

(R5)
PACIFIC SOUTHWEST REGION

PROJECT NAME

2023 CA FS TROPICAL STORM HILARY

SAN BERNARDINO NATIONAL FOREST

MOUNTAINTOP RANGER DISTRICT

DRAWING TITLE

DITCHING & RIP-RAP DETAILS

DATE
month/year

ARCHIVE NO.
ARCHIVE_NUMBER

DESIGNER
?

DRAWN
?

CHECKED
?

PROJECT NO.

DWG SHEET NO.
D-02

SHEET 15 OF 20

5/1/25 07:49 CSOOHOO C:\USERS\CSOOHOO\ONEDRIVE - USDA\DOCUMENTS\ROADS\FY25\ERFO\TS HILARY ERFO\1N02 AND 1N05\TS ROAD PLANS 05-06-2024_RECOVER.DWG;

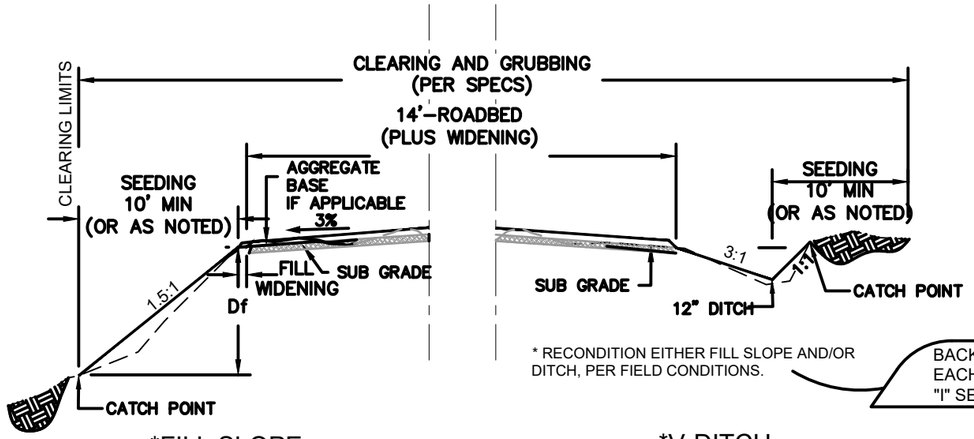

* RECONDITION EITHER FILL SLOPE AND/OR DITCH, PER FIELD CONDITIONS.

BACKSLOPE ROUNDING 24" EACH WAY FROM CATCH POINT "I" SERVICE LEVEL RD. ONLY

*FILL SLOPE

*V-DITCH

RECONSTRUCTION DITCH/FILL SLOPE TEMPLATE, TYPICAL SECTION #1

NOT TO SCALE

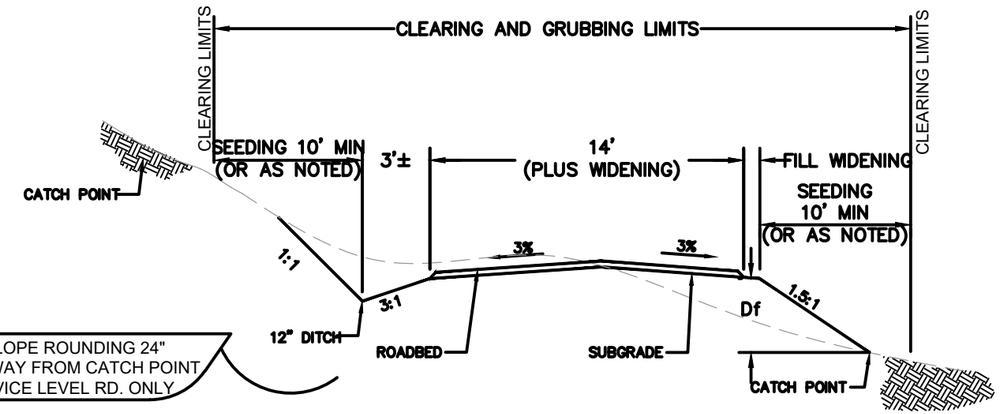

LINEAR GRADING DITCH TEMPLATE, TYPICAL SECTION #2

NOT TO SCALE

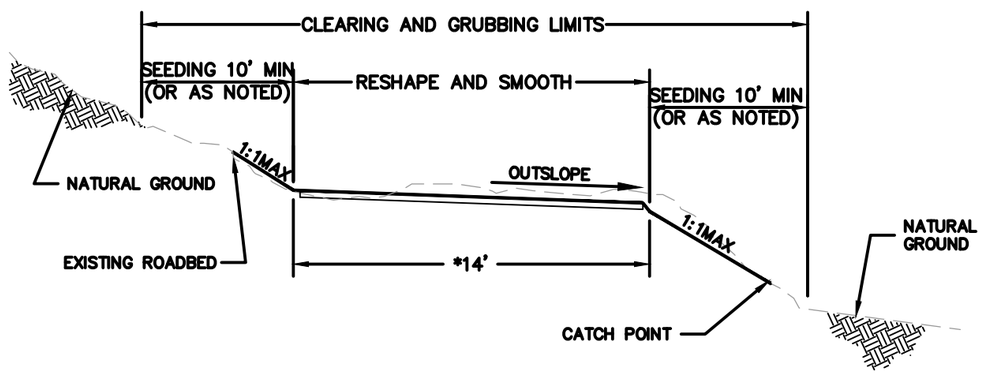

RECONSTRUCTION OUTSLOPE TEMPLATE, TYPICAL SECTION #3

NOT TO SCALE

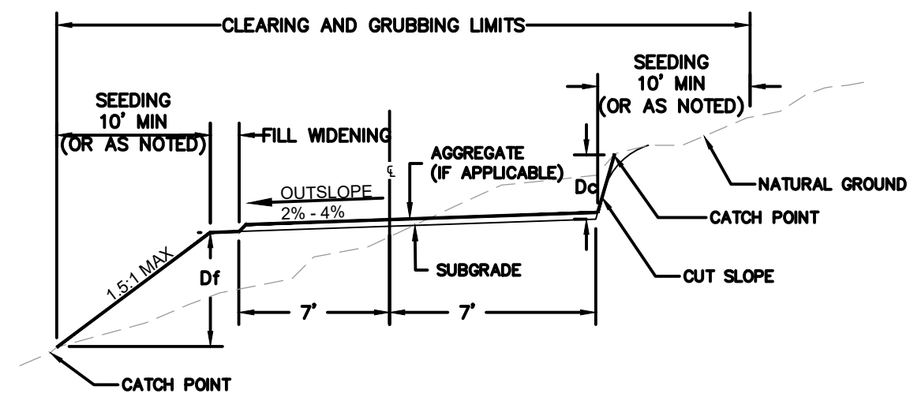

LINEAR GRADING OUTSLOPE TEMPLATE, TYPICAL SECTION #4

NOT TO SCALE

NOTES:

1. ROADBED SHALL BE RECONSTRUCTED TO THE MINIMUM WIDTH SHOWN ON THE CONSTRUCTION DIAGRAM SHEETS. WHERE THE EXISTING ROADBED IS WIDER THAN SHOWN, THE ENTIRE WIDTH OF THE EXISTING ROADBED SHALL BE RECONSTRUCTED.
2. DITCH DEPTH IS MEASURED FROM THE SUBGRADE.
3. ALL ROCK PROTRUDING FROM THE DITCH INSLOPE SHALL BE REMOVED.
4. CROWN AND SUPERELEVATION SHALL BE APPLIED. CROWN RATE SHALL BE 3%. SUPERELEVATION RATE SHALL BE $\frac{1}{4}$" - $\frac{1}{2}$" PER FOOT.
5. ALL ROCK PROTRUDING FROM THE SUBGRADE MORE THAN 1" SHALL BE REMOVED BEFORE PLACING SURFACING.
6. RECONSTRUCTION INCLUDES THE RECONSTRUCTION OF ALL EXISTING WING DITCHES, LEAD-OFF DITCHES, CULVERT INLETS AND OUTLETS FROM EXISTING AND NEW PIPE INSTALLATIONS TO ENSURE DRAINAGE OF -1% FOR A MINIMUM OF 50'.
7. CLEARING SHALL INCLUDE ALL LIMBS HANGING OVER THE CLEARING LIMITS TO A CLEAR HEIGHT OF 14' ABOVE THE ROAD SURFACE.
8. SEE THE CONSTRUCTION DIAGRAM SHEETS FOR SURFACING WIDTHS AND OTHER DETAILS.
9. ADDITIONAL WIDTH FOR FILL WIDENING SHALL BE AS FOLLOWS:

Df	FILL WIDENING
0'–6'	0'
6'–9'	1'
9'+	2'

United States Department of Agriculture
Forest Service

(R5)
PACIFIC SOUTHWEST REGION

PROJECT NAME

2023 CA FS TROPICAL STORM HILARY

SAN BERNARDINO NATIONAL FOREST

MOUNTAINTOP RANGER DISTRICT

DRAWING TITLE

TEMPLATE, TYPICAL SECTION DETAILS

DATE
month/year

ARCHIVE NO.
ARCHIVE_NUMBER

DESIGNER
?

DRAWN
?

CHECKED
?

PROJECT NO.

DWG SHEET NO.
D-03

SHEET 16 OF 20

5/1/25 07:49 CSOOHOO C:\USERS\CSOOHOO\ONEDRIVE - USDA\DOCUMENTS\ROADS\FY25\ERFO\TS HILARY ERFO\1N02 AND 1N05\TS ROAD PLANS 05-06-2024_RECOVER.DWG;

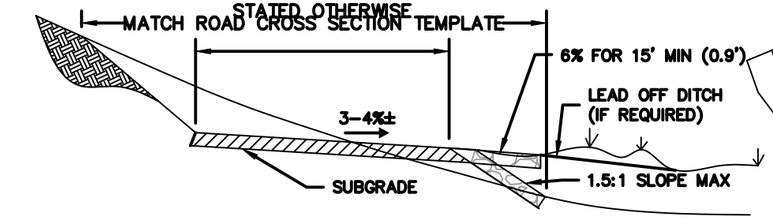

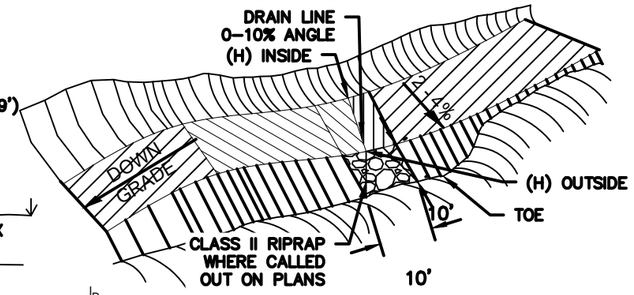

DRAINAGE DIP PERSPECTIVE

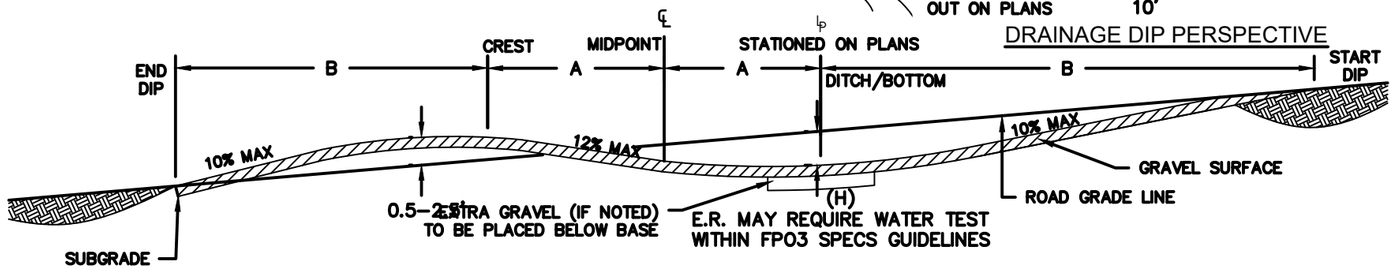

"ROLLING" DRAINAGE DIP PERSPECTIVE

NOT TO SCALE

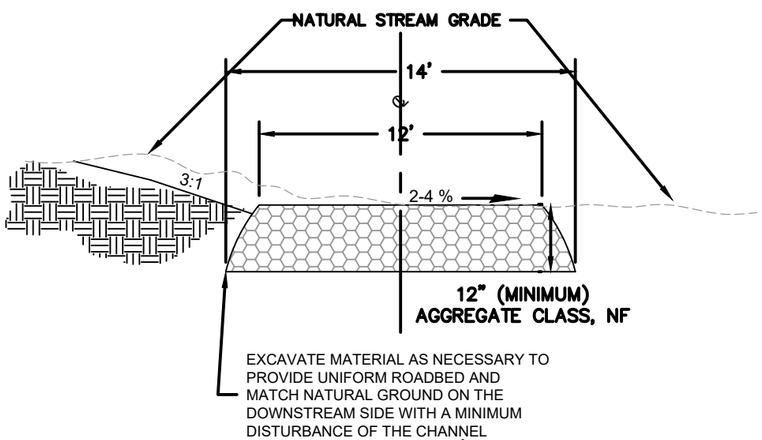

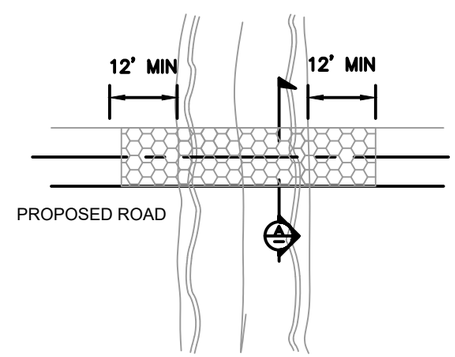

PLAN VIEW

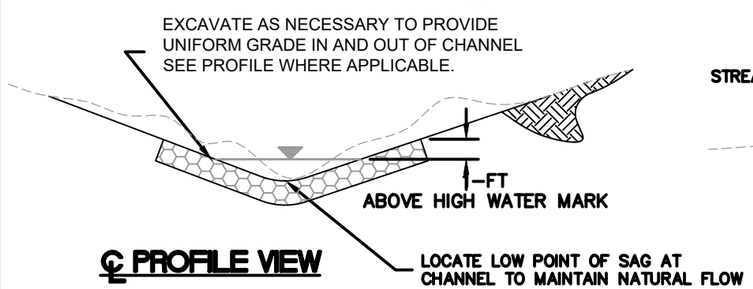

℄ PROFILE VIEW

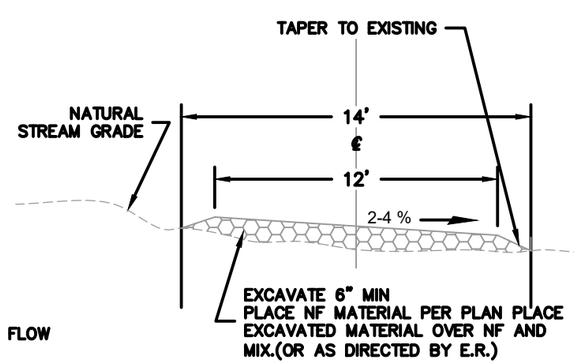

NATURAL FORD DETAILS

N.T.S.

NOTES:

1. PAYMENT FOR CONSTRUCTION OF NATURAL FORD IS INCLUDED IN PAY ITEM 303.
2. DISPOSE OF ALL EXCESS EXCAVATION OUTSIDE OF STREAM CHANNEL WHERE STAKED BY THE ENGINEER. ALL EXCESS EXCAVATION SHALL BE SHAPED AND SLOPED TO DRAIN WITH SLOPES NO STEEPER THAN 1:1.5. ALL DISPOSED AND DISTURBED MATERIAL SHALL BE SEEDED AND MULCHED AS PER SPECIFICATION 625.27.
3. SCREENED AGGREGATE SHALL BE GRADATION NF AS SHOWN BELOW.

GRADE NF (NATURAL FORD)

SIEVE	PERCENT PASSING
6"	90%
4"	40%
2"	MAX. 10%

ROLLING DIP CONSTRUCTION DIMENSIONS					REQ'D AGGREGATE (SPOT GRAVELING ONLY)
TYPE "1"					
%GRADE	LENGTH		DEPTH (H)		
	A	B	OUTSIDE EDGE	INSIDE EDGE	"CRUSHED"
0-4%	18	55	0.9'	0.4'	24 CY
5-8%	16	85	0.8'	0.3'	32 CY
9-12%	15	110	0.7'	0.3'	43 CY

TYPE "2" (DRIVABLE WATER BAR)					REQ'D AGGREGATE "CRUSHED" (SPOT GRAVELING ONLY)
%GRADE	LENGTH		DEPTH (H)		
	A	B	OUTSIDE EDGE	INSIDE EDGE	
0-4%	6	20	1.5'	0.8'	10 CY
5-8%	6	20	1.5'	0.8'	10 CY
9-12%	8	28	1.5'	0.8'	13 CY
NOTE: DIMENSIONS ARE TO THE TOP OF THE COMPACTED AGGREGATE SURFACE.					

GRAVEL AS LISTED UNLESS OTHERWISE SHOWN ON PLANS

ROLLING DIP NOTES:

1. THE CROSS SLOPE OF THE ROADBED SHALL BE MAINTAINED THROUGH THE DIP.
2. THE DRAIN LINE SHALL BE PERPENDICULAR TO THE CENTERLINE OF THE ROADBED, UNLESS OTHERWISE FLAGGED.
3. PLACE CLASS 2 OUTLET RIPRAP WHEN SHOWN ON THE DRAWINGS. REFER TO OUTLET RIPRAP DETAILS BELOW.
4. FOR DIPS ON AGGREGATE SURFACE ROADS, ADD DEPTH OF COMPACTED SURFACE TO DIMENSION (H).
5. WATER BAR AND DIP CONSTRUCTION TOLERANCES SHALL BE IN ACCORDANCE WITH FPO3 204.13; TOLERANCE CLASS A.

- ALL ROLLING DIPS SHALL BE CONSIDERED TYPE 1, UNLESS OTHERWISE NOTED.

WATER BAR CONSTRUCTION NOTES:

1. WATER BARS ARE USUALLY CONSTRUCTED BY ANGLE DOZERS. WATER BARS SHALL HAVE A CLEAN OUTLET AND BE CONSTRUCTED SO THEY WILL NOT FAIL THROUGH ALL WEATHER USE.
2. THE WATER BAR DRAIN LINE SHALL BE SKEWED 0° TO 10°.
3. WATER BARS SHALL BE CONSTRUCTED SO THAT DRAIN LINE EXCAVATION IS APPROXIMATELY 6" INTO SOLID SOIL AND THE TOP OF COMPACTED WATER BAR IS 12" ABOVE DRAIN LINE.
4. THE TOTAL LENGTH OF THE WATER BAR SHALL NOT BE LESS THAN 16'
5. CROSS SLOPE OF THE DRAIN LINE SHALL BE EQUIVALENT TO THE CROSS SLOPE OF THE ROAD PLUS 2%.
6. CONTRACTOR MAY SUBSTITUTE TYPE 2 FOR TYPE I ONLY WITH WRITTEN C.O.R./ER APPROVAL.

United States Department of Agriculture
Forest Service

(R5)
PACIFIC SOUTHWEST REGION

PROJECT NAME

2023 CA FS TROPICAL STORM HILARY

SAN BERNARDINO NATIONAL FOREST

MOUNTAINTOP RANGER DISTRICT

DRAWING TITLE

ROLLING DRAINAGE DIP & NATURAL FORD DETAILS

DATE
month/year

ARCHIVE NO.
ARCHIVE_NUMBER

DESIGNER
?

DRAWN
?

CHECKED
?

PROJECT NO.

DWG SHEET NO.
D-04

SHEET 17 OF 20

5/1/25 07:49 CSOOHOO C:\USERS\CSOOHOO\ONEDRIVE - USDA\DOCUMENTS\ROADS\FY25\ERFO\TS HILARY ERFO\1N02 AND 1N05\TS ROAD PLANS 05-06-2024_RECOVER.DWG;

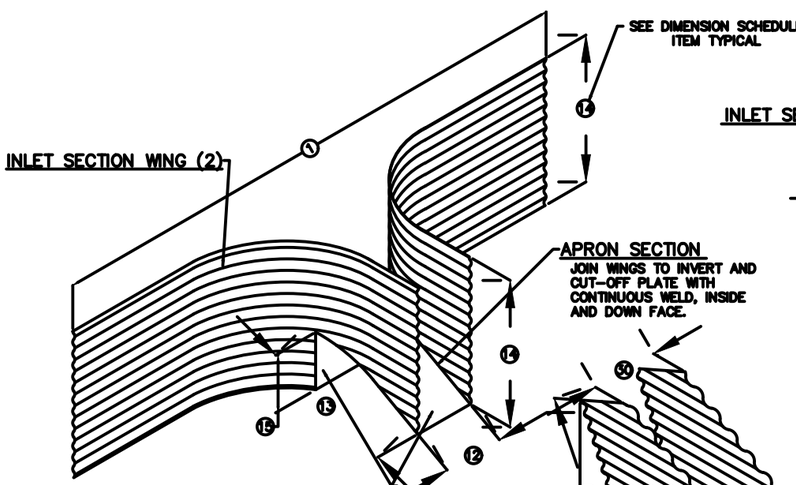

INLET SECTION AND APRON

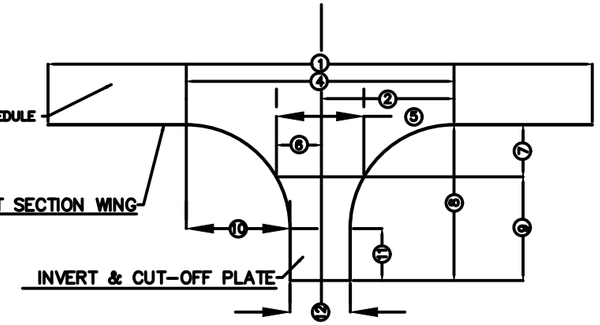

STARTER SECTION PLAN VIEW

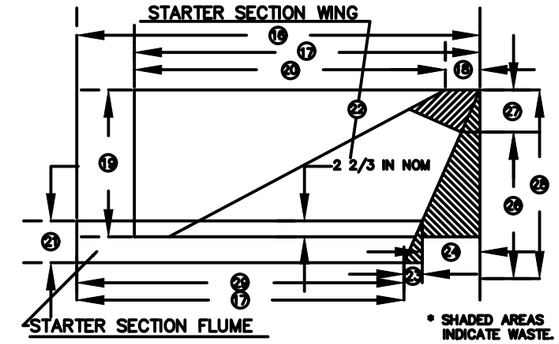

STARTER SECTION SIDE VIEW

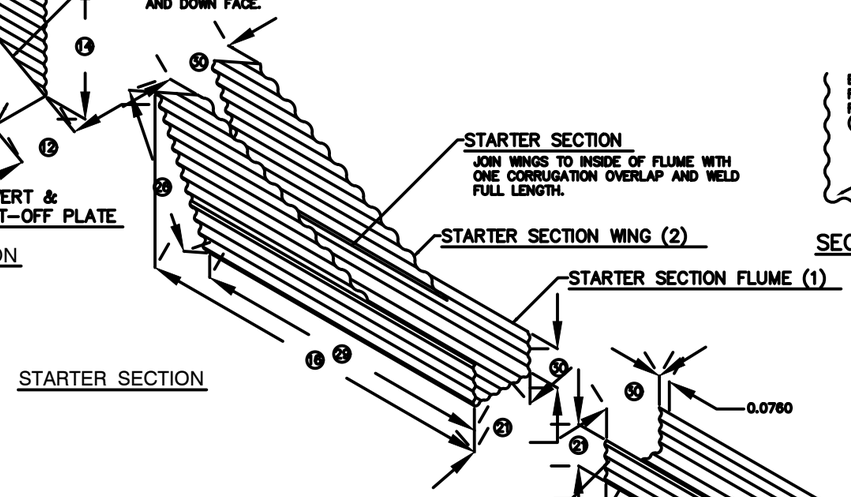

STARTER SECTION

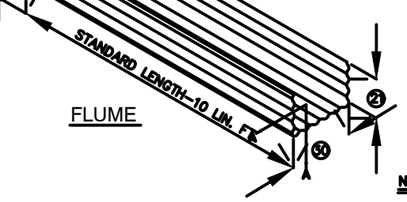

FLUME

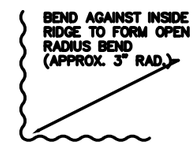

SECTION A–A

NOT TO SCALE

NOTE:
INLET ASSEMBLY

1. INLET ASSEMBLY REQUIRES 1–EACH APRON SECTION, 1–EACH STARTER SECTION.
2. JOIN IN FIELD, PUNCH HOLES FOR ATTACHMENT AT TIME OF OF INSTALLATION.

GENERAL NOTES

SPECIFICATIONS: (AASHTO & COMMERCIAL)

1. PIPE, CORRUGATED, IRON OR STEEL, ZINC COATED (GALVANIZED) M–36
2. STEEL SHEETS, CARBON, ZINC COATED (GALVANIZED) M–218
3. ZINC COATED (GALVANIZED) ..... M–120 & M–218
4. WELDS & DAMAGE CLEANING; ..... SSPC–SP– 2 & 3 (COM.)

MATERIAL USE:

1. INVERT / CUT–OFF PLATE (ONE PIECE): MAKE FROM STEEL SHEET, 16–GAUGE, GALV.
2. APRON WINGS, STARTER FLUME, STARTER WINGS AND STANDARD LENGTHS OF FLUME: MAKE FROM CORRUGATED METAL CULVERT PIPE STOCK SHEETS, 16 GAUGE, GALVANIZED. UTILIZE FULL HALF AND 1/4–SHEETS (FROM 49–INCH x 120–INCH OR 60–INCH AND 25 1/2–INCH x 120–INCH OR 60–INCH) OR FROM PRE–CUT LENGTHS OR COIL STOCK BEFORE CORRUGATING.
3. SHOP GALVANIZE ALL CLEANED WELDS AND EXPOSED BARE METAL AND EDGES, FROM WORK, HANDLING OR DAMAGE. WORK SHALL BE CLEANED AS SPECIFIED AND SHALL BE 2–COAT SPRAY OR BRUSH COATED WITH A ZINC–RICH COLD GALVANIZED COMPOUND, "RUSTO–LEUM NO. 7085," OR APPROVED EQUAL.

NOTE:
ALL DIMENSIONS ARE INCHES, 'N' INDICATES NOMINAL DIMENSIONS.
INDICATED 'NOMINAL' DIMENSIONS WILL VARY WITH STOCK MATERIAL TOLERANCES.

SCHEDULE OF DIMENSIONS

DIM. ITEM	1	2	3	4	5	6	7	8	9	10	11	12	13	14	15
12" SIZE	94–1/2	23–1/4	24 N	46–1/2	15–1/2	7–3/4	9	24	15	18	9	10–1/2	18 N	25–1/2 N	10
24" SIZE	127–1/2	39–3/4	24 N	79–1/2	38–1/2	19–1/4	12	39	27	28	8	23–1/2	32–1/2 N	37–1/2 N	18

DIM. ITEM	16	17	18	19	20	21	22	23	24	25	26	27	28	29	30
12" SIZE	70 N	60 N	6	25–1/2 N	54	7–1/4 N	12–1/2x58–1/2	3–3/16	10 N	30–1/16 N	24–7/8 N	8	32–7/8 N	56–13/16 N	11 N
24" SIZE	70 N	60 N	6 (15.2)	25–1/2 N	54	12–1/2 N	25–1/2x58–1/2	5–1/2	10 N	35–1/3 N	37–3/4 N	10	38–5/8 N	54–1/2 N	24 N

USDA FOREST SERVICE

United States Department of Agriculture
Forest Service

(R5)
PACIFIC SOUTHWEST REGION

PROJECT NAME

2023 CA FS TROPICAL STORM HILARY

SAN BERNARDINO NATIONAL FOREST

MOUNTAINTOP RANGER DISTRICT

DRAWING TITLE

TYPICAL OVERSIDE DRAIN DETAILS

DATE
month/year

ARCHIVE NO.
ARCHIVE_NUMBER

DESIGNER
?

DRAWN
?

CHECKED
?

PROJECT NO.

DWG SHEET NO.
D-05

SHEET 18 OF 20

5/1/25 07:49 CSOOHOO C:\USERS\CSOOHOO\ONEDRIVE - USDA\DOCUMENTS\ROADS\FY25\ERFO\TS HILARY ERFO\1N02 AND 1N05\TS ROAD PLANS 05-06-2024_RECOVER.DWG;

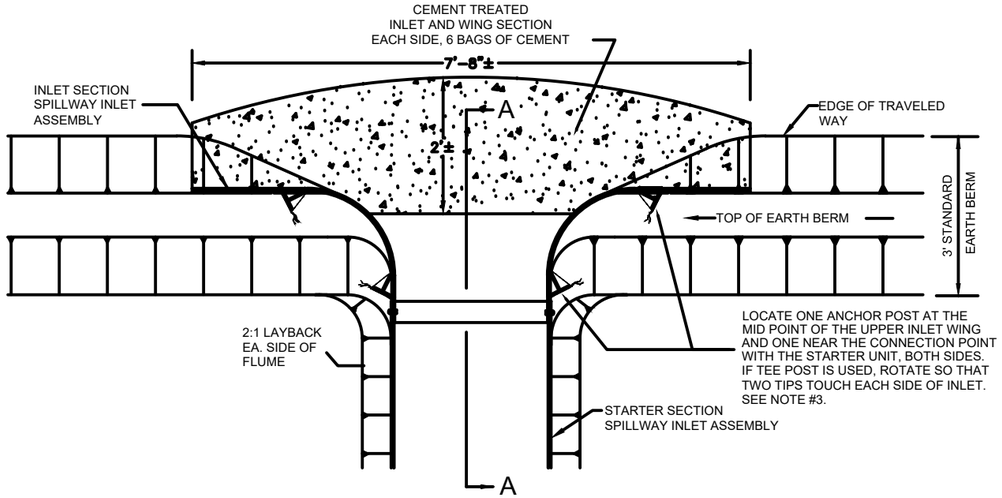

INLET ASSEMBLY PLAN

N.T.S.

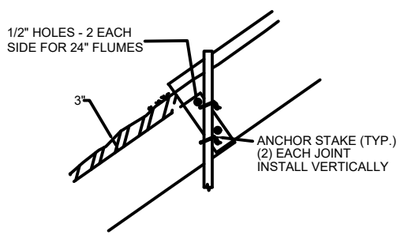

24" FLUME BOLTHOLE PLAN

N.T.S.

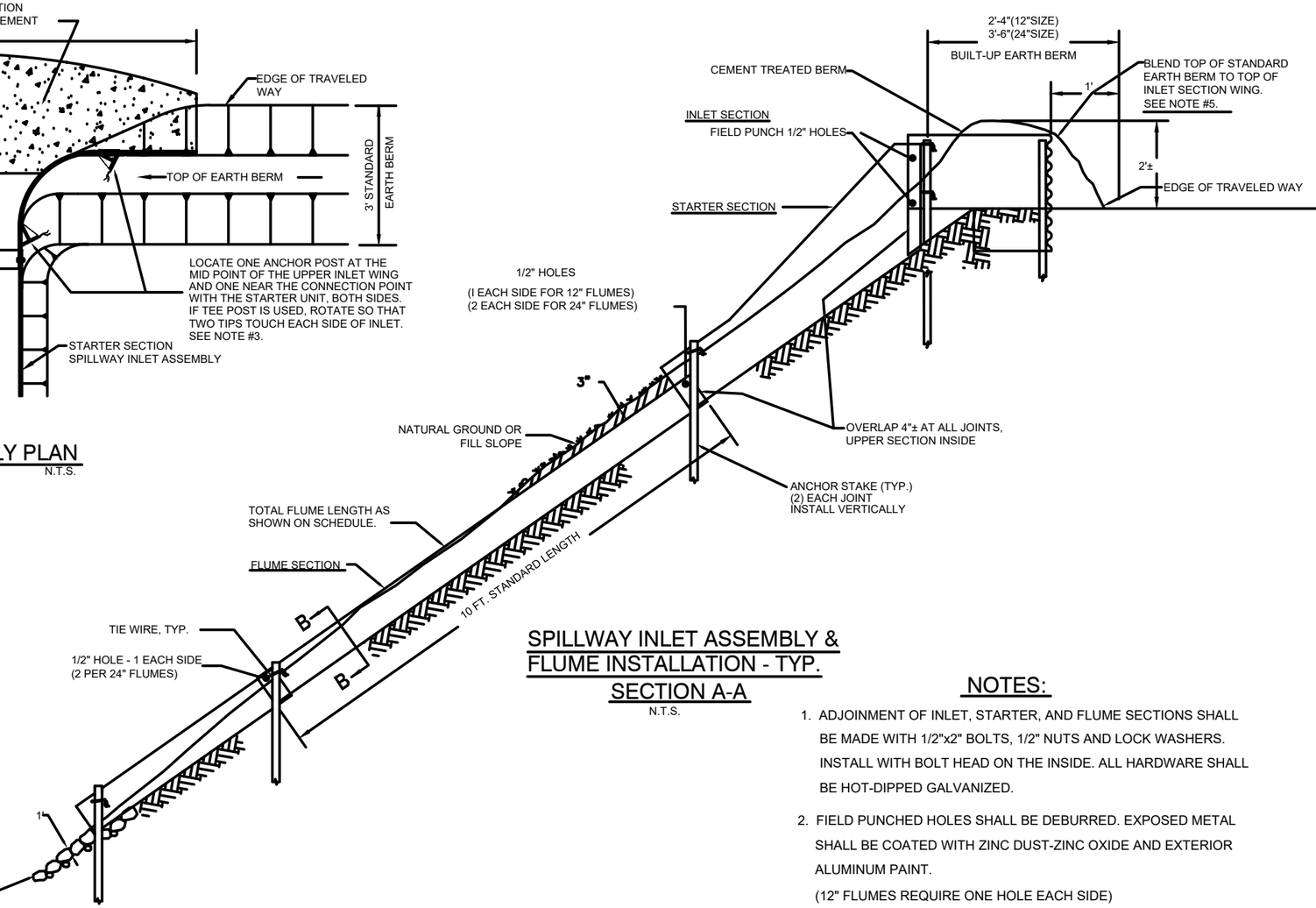

SPILLWAY INLET ASSEMBLY & FLUME INSTALLATION - TYP.

SECTION A-A

N.T.S.

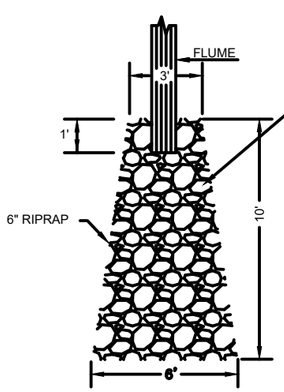

RIPRAP PLAN VIEW

N.T.S.

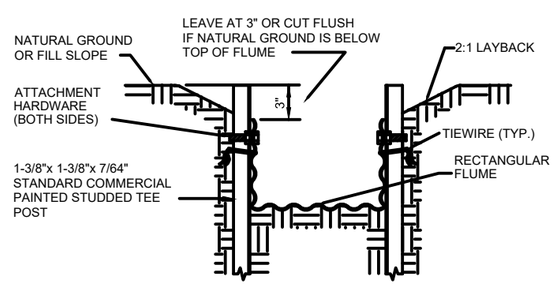

SECTION B-B

N.T.S.

NOTES:

1. ADJOINMENT OF INLET, STARTER, AND FLUME SECTIONS SHALL BE MADE WITH 1/2"x2" BOLTS, 1/2" NUTS AND LOCK WASHERS. INSTALL WITH BOLT HEAD ON THE INSIDE. ALL HARDWARE SHALL BE HOT-DIPPED GALVANIZED.
2. FIELD PUNCHED HOLES SHALL BE DEBURRED. EXPOSED METAL SHALL BE COATED WITH ZINC DUST-ZINC OXIDE AND EXTERIOR ALUMINUM PAINT.
   (12" FLUMES REQUIRE ONE HOLE EACH SIDE)
   (24" FLUMES REQUIRE TWO HOLES EACH SIDE)
3. ANCHOR STAKES SHALL BE ATTACHED WITH NO. 9 SINGLE STRAND MULTIPLE TIE GALVANIZED. STEEL WIRE THROUGH TWO FIELD HOLES, 2" APART, LOCATED EACH SIDE OF ANCHOR STAKE.
4. EROSION PROTECTION AND RIP-RAP TO BE INSTALLED WHERE FEASIBLE. IF PROTECTION WHERE SOIL IS NOT FEASIBLE, MATERIAL MATERIAL AT OUTLET TO BE OPENED AND FLARED TO ALLOW DRAINAGE. USE NATIVE ROCK IF NO SEPARATE PAY ITEM
5. PORTLAND CEMENT SHALL BE INCORORATED INTO THE BERMS AND BACKFILL TO STABILIZE INLETS. TOTAL CEMENT CONTENT SHALL COMPROMISE 4-10% OF THE BACKFILL MATERIAL. (MIN. 6 SACKS PER DRAIN).

United States Department of Agriculture
Forest Service

(R5)
PACIFIC SOUTHWEST REGION

PROJECT NAME

2023 CA FS TROPICAL STORM HILARY

SAN BERNARDINO NATIONAL FOREST

MOUNTAINTOP RANGER DISTRICT

DRAWING TITLE

OVERSIDE DRAIN INSTALLATION DETAILS

DATE
month/year

ARCHIVE NO.
ARCHIVE_NUMBER

DESIGNER
?

DRAWN
?

CHECKED
?

PROJECT NO.

DWG SHEET NO.
D-06

SHEET 19 OF 20

5/1/25 07:49 CSOOHOO C:\USERS\CSOOHOO\ONEDRIVE - USDA\DOCUMENTS\ROADS\FY25\ERFO\TS HILARY ERFO\1N02 AND 1N05\TS ROAD PLANS 05-06-2024_RECOVER.DWG;

CLEARING AND GRUBBING DETAILS

N.T.S.

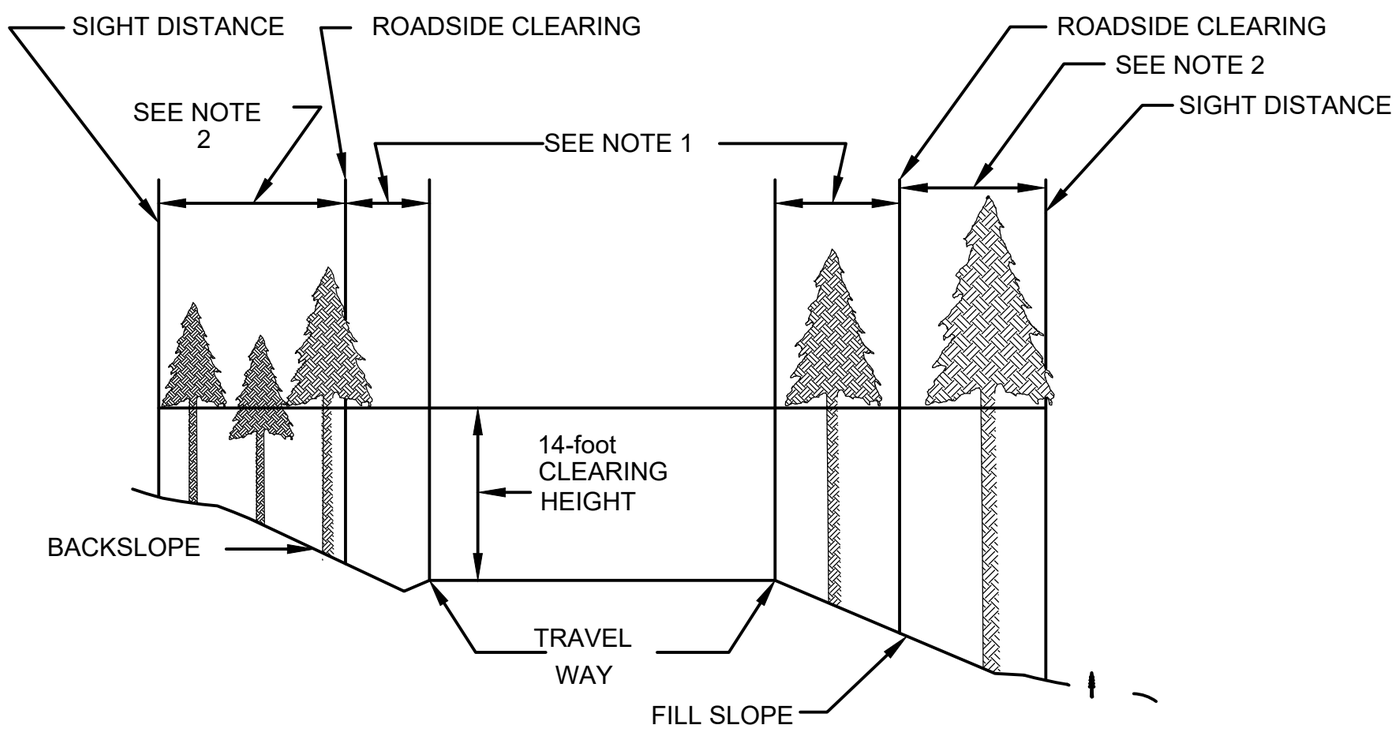

CLEARING LIMITS TYPICAL

NO SCALE

CONSTRUCTION NOTES:

1. DURING CLEARING OPERATIONS, ALL VEGETATION WITHIN THE TRAVEL AND 3 FT OF THE SHOULDER SHALL BE REMOVED. GRUB DEEP ENOUGH TO REMOVE STUMPS ROOTS, BURIED LOGS, AND OTHER VEGETATION DEBRIS WITHIN CLEARING LIMIT.
2. BRANCHES ON REMAINING TREES SHALL BE TRIMMED FROM GROUND LEVEL TO A CLEARING HEIGHT LIMIT OF 14 FEET ABOVE THE ROADBED OR TO A LIMIT OF 60% OF THE TREE'S HEIGHT, WHICHEVER IS LESS. LIMBS OF VEGETATION SHALL BE CUT SO AS TO NOT PROTRUDE WITHIN THE CLEARING LIMIT.

United States Department of Agriculture
Forest Service

(R5)
PACIFIC SOUTHWEST REGION

PROJECT NAME

2023 CA FS TROPICAL STORM HILARY

SAN BERNARDINO NATIONAL FOREST

MOUNTAINTOP RANGER DISTRICT

DRAWING TITLE

TEMPLATE, TYPICAL SECTION DETAILS

DATE
month/year

ARCHIVE NO.
ARCHIVE_NUMBER

DESIGNER
?

DRAWN
?

CHECKED
?

PROJECT NO.

DWG SHEET NO.
D-07

SHEET 20 OF 20

5/1/25 07:49 CSOOHOO C:\USERS\CSOOHOO\ONEDRIVE - USDA\DOCUMENTS\ROADS\FY25\ERFO\TS HILARY ERFO\1N02 AND 1N05\TS ROAD PLANS 05-06-2024_RECOVER.DWG;