SECTION J
DOCUMENTS, EXHIBITS, AND OTHER ATTACHMENTS
TABLE OF CONTENTS

ATTACHMENT NUMBER	**ATTACHMENT TITLE**
J-1502000-01	DEFINITIONS AND ACRONYMS
J-1502000-02	SPECIFIC WORK REQUIREMENTS
J-1502000-03	REFERENCES AND TECHNICAL DOCUMENTS
J-1502000-04	FACILITIES PROPERTY INVENTORY
J-1502000-05	SITE MAPS
J-1502000-05-01	SECURITY FENCE MAP
J-1502000-05-02	STORM DRAIN MAP
J-1502000-06	HISTORICAL SERVICE ORDER WORKLOAD
J-1502000-07	AIRPLANE SUNSHADE INVENTORY
J-1502000-07-01	AIRCRAFT SUNSHADE/PREVENTIVE MAINTENANCE PROGRAM
J-1502000-08	SEPTIC TANK INVENTORY
J-1502000-09	HVAC WATER TREATMENT LOOP INVENTORY
J-1502000-09-01	HVAC WATER TREATMENT WATER REQUIREMENTS INFORMATION
J-1502000-09-02	BUILDING 2145 AND 2146 HUMIDITY CONTROL SYSTEM
J-1502000-10	DIRECT DIGITAL CONTROLS (DDC) INVENTORY
J-1502000-10-01	DDC POINTS INVENTORY
J-1502000-11	BOILER AND UPV INVENTORY
J-1502000-12	SECURITY SYSTEMS AND EQUIPMENT INVENTORY
J-1502000-13	COMPRESSED AIR SYSTEMS INVENTORY
J-1502000-14	CATHODIC PROTETION RECTIFIER REPORT (Monthly)
J-1502000-14-01	CATHODIC PROTETION RECTIFIER REPORT (Quarterly)
J-1502000-14-02	CATHODIC PROTECTION FUEL TRANSFER LINES
J-1502000-14-03	CATHODIC PROTECTION TANK IDENTIFICATION
J-1502000-14-04	CATHODIC PROTECTION TEST POINTS
J-1502000-15	WEIGHT HANDLING EQUIPMENT INVENTORY CRANES
J-1502000-15-01	BOAT LIFT MAINTENANCE AT FUEL PIER
J-1502000-15-02	SPILL BOOM MAINTENANCE
J-1502000-16	LIGHTNING ARRESTORS AND GROUNDING DEVICES INVENTORY
J-1502000-17	JET REFUELING FACILITIES AND SYSTEMS INVENTORY
J-1502000-17-01	TANK FARM A JET REFUELING FACILITIES AND SYSTEMS INVENTORY
J-1502000-18	SWIMMING POOL FACILITIES
J-1502000-19	ARRESTING GEAR (E-28 GEAR) INVENTORY
J-1502000-20	EMERGENCY GENERATOR INVENTORY
J-1502000-21	MISCELLANEOUS HVAC AND REFRIGERATION SYSTEM INVENTORY INFO
J-1502000-21-01	HVAC AND REFRIGERATION INVENTORY
J-1502000-21-01-01	CLEAN ROOM VENTS – BUILDING 1121
J-1502000-21-02	TEMPERATURE STANDARDS
J-1502000-21-03	AIR QUALITY REPORT
J-1502000-21-04	DAILY HVAC REPORT
J-1502000-22	RESERVED (Formerly Fire Protection. Covered under contract N40085-24-D-0048)
J-1502000-23	VERTICLE TRANSPORTATION EQUPIMENT INVENTORY
J-1502000-23-01	VERTICLE TRANSPORTATION EQUPIMENT INVENTORY AUTOMOBILE LIFTS
J-1502000-24	HISTORICAL SERVICE ORDER DATA
J-1502000-25	BACKFLOW PREVENTION DEVICES INVENTORY
J-1502000-26	EXTERIOR LIGHTING INVENTORY AND LOCATIONS
J-1502000-27	GREASE TRAP INVENTORY
J-1502000-28	AIRFIELD LIGHTING MAINTENANCE INFORMATION

J-1502000-28-01	NEW LIGHTING INFORMATION FOR AIRFIELD
J-1502000-28-02	WARRANTY INFORMATON FOR NEW LIGHTING
J-1502000-28-03	COMMUNICATIONS TOWER LIGHTING CONTROLLER
J-1502000-29	400 HZ and other CONVERTERS INVENTORY
J-1502000-30	MARINE CORPS AIR STATION STORAGE TANKS FUEL
J-1502000-30-01	MARINE CORPS AIR STATION STORAGE TANKS OIL
J-1502000-30-02	MARINE CORPS AIR STATION STORAGE TANKS USED OIL
J-1502000-30-03	MARINE CORPS AIR STATION STORAGE TANKS AFFF
J-1502000-30-04	MARINE CORPS AIR STATION STORAGE TANKS LPG
J-1502000-30-05	MARINE CORPS AIR STATION STORAGE TANKS EG
J-1502000-31	FORMS
J-1502000-31-01	STANDBY FUEL USAGE REPORT
J-1502000-31-02	FUEL TANK READINGS
J-1502000-31-03	TANK INSPECTION (Monthly)
J-1502000-31-04	TANK OVERFILL PROTECTION SYSTEMS CHECKLIST
J-1502000-31-05	TANK INTEGRITY TEST
J-1502000-31-06	TANK VISUAL INSPECTION
J-1502000-31-07	TRANSFER PIPELINE BIWEEKLY CHECK
J-1502000-31-08	TRANSFER PIPELINE ANNUAL
J-1502000-31-09	PIPELINE PRESSURE TEST
J-1502000-31-10	FACILITIES MONTHLY INSPECTION
J-1502000-31-11	FACILITY ANNUAL INSPECTION
J-1502000-31-12	SPILL CONTAINMENT AND DRAINAGE SYSTEM
J-1502000-31-13	SECONDARY CONTAINMENT DRAINAGE
J-1502000-31-14	OIL/WATER LEVEL INSPECTION REPORT(MONTHLY)
J-1502000-31-15	QUARTERLY STORM WATER BEST MANAGEMENT PRACTICES CHECK LIST
J-1502000-32	BACHELOR QUARTERS
J-1502000-33	AIRCRAFT HANGARS AND SQUADRON
J-1502000-33-01	AIRCRAFT HANGARS DOORS
J-1502000-33-02	ANNUAL CLEANING REQUIREMENTS FOR VERTICAL LIFT FABRIC DOORS (VLFD) AT HANGAR 2146, HANGAR 3060 AND HANGAR 3090
J-1502000-33-03	QUARTERLY PREVENTIVE MAINTENANCE REQUIREMENTS FOR VERTICAL LIFT FABRIC DOORS (VLFD) AT BUILDING 2146
J-1502000-34	MARINE CORPS AIR STATION OIL/WATER SEPARATOR TANKS
J-1502000-35	SOLAR PANEL INVENTORY(HOT WATER) LOCATION
J-1502000-36	GALLEY HOOD CLEANING LOCATION
J-1502000-37	PROPANE AIR BLENDER
J-1502000-38	UPS BATTERY SYSTEMS INVENTORY
J-152000-39	LHD DECK
J-152000-40	FALL PROTECTION EQUIPMENT
J-152000-41	HAZARDS OF ELECTROMAGNETIC RADIATION ON ORDNANCE (HERO)
J-1502000-42	COMMANDER'S CRITICAL INFORMATION REQUIREMENT NOTIFICATION

ATTACHMENT J-1502000-01
DEFINITIONS AND ACRONYMS

TERM	DESCRIPTION
ACTUAL PARTS MANUFACTURER	A manufacturer of facility maintenance or automotive/equipment parts supplied direct to original equipment manufacturer (OEM) for incorporating into production vehicle/equipment and/or for resale as replacement parts. The OEM is the actual parts manufacturer for those parts produced solely by him.
AUTHORIZED USE LIST	Hazardous materials authorized for use on the station.
BUILDING ELECTRICAL SYSTEM	This term is sometimes referred to as the secondary system. It consists of all building transformers and electrical panels, including all breakers, disconnects, conduit, and wiring. The system also includes electrical runs from the load side of the transformers to electrical panels continuing to boilers, heaters, fans, cranes, lighting systems, pumps, generators, rectifiers, ventilators, overhead doors, clocks, etc.
CONSTRUCTION	Construction is the erection, installation, or assembly of real property (facility, structure, etc.); the addition, expansion, extension, alteration, or conversion of existing real property; or the relocation of real property from one location to another. Construction includes equipment installed in and on any part of such facilities/property; related site preparation, excavation, filling, and landscaping; or other land and ground structure improvements.
CONSTRUCTION EQUIPMENT	Mechanical equipment used in the construction, alteration, repair, or maintenance of buildings, bridges, roads, or other kinds of real property. It includes front loaders, end loaders, cranes, road graders, rollers, tractors, air compressors, and augers.
CRANE, CATEGORY 1	Portal cranes, Hammerhead cranes, Locomotive cranes, Derricks, Floating cranes (YD), Tower cranes, Container cranes, Mobile cranes (except those indicated as category 4), including truck, cruiser, crawler, warehouse/industrial cranes, and cranes used for dragline, pile driving, clamshell, magnet, bucket work, and Aircraft crash cranes.
CRANE, CATEGORY 2 & 3	Cranes with rated capacities of 20,000 pounds or greater are category 2. Examples are Overhead traveling cranes, Gantry cranes (rail mounted), Wall cranes, Jib cranes, Pillar cranes, Pillar jib cranes, Monorails and associated hoists, Fixed hoists, and including chain falls. Pedestal mounted commercial boom assemblies (fixed length, telescoping, and articulating types) attached to stake trucks, trailers, flatbeds, or railcars, or stationary mounted to piers, etc., with OEM rated capacities less than 2,000 pounds.
CRANE, CATEGORY 4	Commercial truck mounted cranes, Truck mounted articulating boom cranes, Pedestal mounted commercial boom assemblies (fixed length, telescoping, and articulating types) attached to stake trucks, trailers, flatbeds, or railcars, or stationary mounted to piers, etc., with OEM rated capacities of 2,000 pounds and greater. Commercial truck mounted cranes and truck mounted articulating boom cranes with OEM capacities of 2,000 pounds and greater require a licensed operator even if the cranes are down rated below 2,000 pounds capacity for administrative purposes.
ELECTRICAL DISTRIBUTION SYSTEM	This term is sometimes referred to as the primary system. It consists of all overhead and underground medium voltage (12,470V) cabling between the SCE&G Power Company's connections at the station's main substation to the transformers in each building. This system includes, but is not limited to, all switchgear, equipment, and all equipment ahead (primary side) of the transformers.

EMERGENCY GENERATOR SYSTEMS	Emergency generator systems include generators, fuel tanks, transfer switches, batteries and battery charges, and all associated equipment necessary for a complete and functional system.
EQUIPMENT, COLLATERAL	Encompasses built-in and large substantially affixed equipment/property that is normally acquired and installed as part of a facility project.
EQUIPMENT, INSTALLED	Encompasses building-type equipment, built-in equipment, and large, substantially affixed equipment/property, and is normally acquired and installed as part of a facility project. Installed equipment is normally required to make a facility useful and operable. Removing such equipment would impair the usefulness, safety, or environment of the facility or the facility restoration work required after its removal, is substantial.
EQUIPMENT, PERSONAL PROPERTY	Personal property equipment includes all equipment other than collateral equipment. Such equipment, when acquired and used in a facility or a test apparatus, can be severed and removed after erection or installation without substantial loss of value or damage thereto or to the premises where installed.
FACILITIES LIFE CYCLE	A facilities life cycle is divided into four stages, requirements (planning and design), acquisition (construction and acceptance), stewardship (operations, maintenance and repair), and disposal.
FACILITIES MAINTENANCE	The recurring day-to-day, periodic, or scheduled work required to repair or maintain facilities in a specified condition, or to restore facilities to initial or useable condition by overcoming the effects of wear and tear, damage or deterioration. This includes work undertaken to prevent damage to a facility which otherwise would be more costly to restore.
FACILITIES MAINTENANCE MANAGEMENT	The planning, prioritizing, organizing, controlling, reporting, evaluating, and adjusting of facilities maintenance operations to support the CNO/NAVFAC facilities policy and objectives and satisfy customers' facility needs. Defined by the International Facility Management Association as "the practice of coordinating the physical workplace with the people and work of the organization."
INTEGRATED MAINTENANCE PROGRAM (IMP)	IMP is a recurring state-of-the-art, reliability-centered inspection, testing, maintenance and repair program that determines best practices for managing the functions and consequences of failures of facilities equipment and system components. IMP encompasses accepted commercial practices, including reactive, preventive, predictive and proactive maintenance, into one optimal program. The IMP approach gives the Contractor full responsibility to maintain systems and equipment and perform repairs whenever necessary to ensure equipment and systems are operational and remain in a constant state of readiness. Service Orders will not be issued for accomplishment of repairs on systems and equipment maintained under IMP.
LIFE-CYCLE COSTS	A form of economic analysis that considers the total cost of owning, operating, and maintaining a building or system over its useful life.
MAINTENANCE	The recurring day-to-day, periodic, scheduled, or unscheduled work required to prevent deterioration, or restore a piece of equipment, a system, or a real property facility to such condition that it may effectively utilized for its designated purpose. Functions included are: inspection, lubrication, adjustment, service, repair, rebuild, part replacement, overhaul, and rehabilitation.
MAINTENANCE, PREVENTIVE	Maintenance designed to increase the availability of the facilities/equipment by reducing the number of unexpected breakdowns or service interruptions. It is any planned maintenance activity that improves equipment life and avoid any unplanned maintenance requirements.

MANAGEMENT INFORMATION SYSTEMS-MAINTENANCE	A computerized system that will provide sufficient information for management to evaluate differences between budgets and actual costs and evaluate performance.
OPERATIONAL CHECKS (OP CHKS)	Operational checks for all systems, listed in USMCMax, shall include observing operation, operating controls, checking for damage, lubricating, making adjustments, performing minor repairs, and the other items listed on the USMCMax operations checklists. Operations shall be conducted in accordance with applicable manufacturer's specifications, manuals, brochures, literature, directives, pamphlets, etc., except as may be directed by the ACO for reasons of emergencies, inclement weather, energy conservation, safety, etc. Operation checks shall be conducted anytime the system is restarted after repairs, power outages, water outages, etc.
OPERATOR MAINTENANCE	Work accomplished during routine inspections, other than PM, and system use and operation. Operator maintenance includes, but is not limited to, work such as the replacement of ground wires, plugs, clips, seals, O-rings, the lubrication of components, the tightening of nuts, bolts, and screws to prevent leakage and to stabilize equipment, corrosion control, and spot painting. Operator maintenance is normally limited to actions taken by system operators using common hand tools.
OTHER SUPPORT SERVICES	Other Support Services includes, but is not limited to, preparation and erection of signs, intra-station moves of furniture and/or equipment, repair and painting of furniture, packing and crating and minor fabrication and installation, unscheduled grounds maintenance, and other services, generally for special events frequently in observances of holidays.
REBUILT COMPONENTS/ ASSEMBLIES	Components, assemblies, or subassemblies of equipment that have been disassembled and reconstructed using replacement or remanufactured parts as necessary and reassembled to produce a serviceable product whose service life expectancy is at least equal to the original component/assembly.
RECURRING SERVICES	Recurring services are those services which are specified in the contract to be performed on a recurring, periodic or standing basis. These recurring services include, but are not limited to, preventive maintenance, watch standing requirements, operations and repair, and other services.
RELAMPING	Building relamping is the replacement of all defective bulbs, tubes, ballasts, fuses, starters, covers, and reflectors. Building relamping includes relamping all exit sign lights, fire alarm indicator lights, and fire alarm boxes. Building relamping unless otherwise specified shall be accomplished as service orders.
REPAIR	Repair is the restoration of facilities or equipment to such a condition that it may be effectively utilized for its designated purposes by overhaul, reconstruction, or replacement of constituent parts or materials which have deteriorated by action of the elements or usage, and which have not been corrected through maintenance. This term also applies to replacement of the entire unit or system if beyond economical repair. The intent of repair is to have the equipment at normal working condition.
REPLACEMENT	Replacement, as a distinct work element, is confined to a program of planned replacement of a facility or its components. It may be further limited to major components such as air conditioning compressors, furnaces or hot water heaters. Replacement is performed when the equipment has reached the end of its useful life; when it no longer can perform due to degradation of its internal components and repair is no longer cost effective. Included under the replacement would be the major rebuilding of any component, since rebuilding also restores performance.

RESTORATION	Restoration of real property to such a condition that it can be used for its intended purpose. Includes repair or replacement work to restore facilities damaged by inadequate sustainment, excessive age, natural disaster, fire, accident or other causes.
REWORK	Work that is not adequately performed, not of an acceptable quality level, and must be corrected or re-performed at no additional cost to the Government.
SALVAGE	Property which, because of its worn, damaged, deteriorated, or incomplete condition, or specialized nature, has no reasonable prospect of sale or use as serviceable property without major repairs or alterations, but which has some value in excess of its scrap value.
SELF HELP PROGRAM	MCAS Beaufort runs a cost effective self-help program. Any tenant on the base may submit to the Public Works Division a request to accomplish a task with labor from the tenant's organization. These tasks are usually simple carpentry, masonry, painting and other types of work that a person would normally do around the house. The request comes to the Public Works Facility Maintenance Director (FMD) for approval. Approved job plan requests are turned over as a service order to the Contractor's work force where the appropriate tradesman or foreman determines and obtains the necessary materials for the tenant and ensures that the accomplished task is up to the standards of the surrounding area.
SERVICE ORDER	Service orders are minor facility problem requests or requests for facilities-related work that are too small to be planned and estimated. Service Orders are classified as emergency, urgent, or routine work requests. A description of the problem or requested work will be placed in USMCMax on a Work Authorization form and made available to the Contractor. A completed work authorization form will be provided to Public Works by the Contractor. If the Service Order is classified as Emergency, or Urgent the Government will notify the Contractor that the proper work authorization form is available. Emergency or Urgent Service Orders shall be considered as received by the Contractor at the time and date that this notification is made. Service Orders are called into the work reception center by building occupants or generated by designated Government or Contractor representatives; are brief in scope; and do not reasonably require detailed job planning. Multiple maintenance, repair, and minor construction requirements received for the same trade in the same building or structure at the same time will be combined into one Service Order as long as the service Order threshold is not exceeded. Due to the nature of emergencies, the Contractor shall accept emergency Service Orders when requested by anyone. When not an emergency, the caller shall be politely instructed to notify the Government work reception desk. Politely refuse other calls for work not appropriate for Service Orders.
SERVICE ORDER CYCLE	Count down starts when the customer is notified that the work has been accepted to be accomplished to the time when the work chit is turned in by the craftsmen as complete is one complete cycle period for a service order.
SERVICE ORDER, EMERGENCY	Emergency service order is work requiring immediate action. This immediate action can be to correct or prevent loss or damage to Government property and assets, restore disrupted essential services, or eliminate life-threatening hazards to personnel or property. Emergency Service orders can also be utilized to complete work needed to correct, repair, or modify items that are considered high visibility and immediate action is required.
SERVICE ORDER, ROUTINE	Service orders that are not classified emergency in nature or urgent.

SERVICE ORDER, URGENT	Urgent service order is work that is not considered to present an immediate danger to personnel or threaten damage to property, but would soon inconvenience and/or affect the health or wellbeing of personnel or disrupt essential services. (e.g. HVAC in noncritical areas, water heaters, commodes, urinals, safety hazards or other failures.)
SUSTAINMENT	Maintenance and repair activities necessary to keep a typical inventory of facilities in "normal working condition". Sustainment includes regularly scheduled maintenance as well as cyclical major repairs or replacement of components that occur periodically over the expected service life of the facilities.
TENANT ACTIVITIES	Those activities of a separate command occupying facilities within the confines of the Marine Corps Air Station, receiving support from the host activity and whose funding source is separate from the host activity.
WEIGHT HANDLING EQUIPMENT (WHE)	Weight handling equipment consists of cranes (e.g., portal cranes, jib cranes), rigging gear (e.g., slings, shackles), and associated equipment (e.g., portable hoists, dynamometers). For purposes of this technical sub-annex, WHE does not include mobile or transportable truck, crawler, and railway mounted locomotive cranes covered in 1700000 BSVE.

ATTACHMENT J-1502000-01
DEFINITIONS AND ACRONYMS

Acronym	**Title**
ANSI	American National Standards Institute
ASHRAE	American Society Heating, Refrigerating and Air Conditioning Engineers
BPVC	Boiler and Pressure Vessel Code
CESE	Civil Engineering Support System
FRCS	Facility Related Control System
HVAC	Heating, Ventilation, and Air Conditioning
IBC	International Building Code
IDS	Intrusion Detection Systems
NFPA	National Fire Prevention Association
OEM	Original Equipment Manufacturer
RPIE	Real Property Inventory Equipment
SCADA	Supervisory Control And Data Acquisition
SRM	Sustainment, Restoration and Modernization
UBC	Uniform Building Code
UFC	Unified Facilities Criteria
UPS	Uninterruptible Power Supply
UPV	Unfired Pressure Vessel
VTE	Vertical Transportation Equipment

ATTACHMENT J-1502000-02
SPECIFIC WORK REQUIREMENTS

The Contractor shall be responsible for the following services. This is not an all-inclusive list. Work requirements may be issued as Service Orders or Non-Recurring work depending on the magnitude of the work.	
Carpentry and Masonry	The Contractor shall be responsible for all repair and replacement of carpentry and masonry portion of buildings, structures and facilities, including all floor, wall, ceiling and roof construction, building finishes, door hardware, foundations water proofing seals, flashing. Interior and exterior finishes, trim and décor shall be maintained to match existing trim and decor. The Contractor shall also be responsible for structural alterations and equipment installations. Responsibilities shall include but not be limited to:
Built-In Fixtures	Fabricating installing, and repairing building built-in fixtures, trim, doors, door and window hardware, windows, Venetian blinds, interior and exterior walls, wall surfaces, floors, ceilings, roofs, nameplates and holders, walls, mail boxes signs, towers, rooms, and small buildings.
Boxes and Crates	The Contractor shall be responsible for the fabrication of tailored boxes and crates on an as-needed basis.
Glass	The Contractor shall be responsible for all types of glass replacement, including insulated glass units, tempered door glass, as directed by the ACO. Historically to cut, install replacement glass has cost approximately $15,000 per year. Replacement of glass on desk tops shall also be the responsibility of the Contractor.
Laying Block	Mixing mortar, determining correct type of material and mixture; running lines and levels as required; and cutting, shaping and laying bricks, stone, and block.
Pouring Concrete	Pouring and finishing of concrete, including placing reinforcements and other embedded items.
Chimneys, Foundations, and Walls	Constructing, maintaining, and repairing chimneys, foundations and walls, using brick, block, stone, or concrete.
Door Accessories	The Contractor shall be responsible for installing, maintaining, repairing and adjusting locks, latches, panic devices and strikes of different makes, sizes, and shapes installed in buildings and building components. The Contractor shall also be responsible for fabricating minor parts from raw stock and installing, repairing, cleaning, repacking and adjusting all makes and types of door closers.
Exterior Walls	Damaged or deteriorated wall areas shall be restored to a serviceable, watertight, and weather tight conditions. This includes but is not limited to replacing damaged masonry units; tuck pointing loose or eroded mortar joints, sealing penetrations in wall openings replacing damaged or deteriorated siding and exterior trim, and replacing miscellaneous hardware items
Masonry Units	Damaged masonry units (brick or concrete block) shall be replaced with a unit of the same size, color, and texture. The mortar shall be completely removed and the cavity cleaned and all debris removed. The masonry unit shall then be reseated in mortar and the remaining cavity packed with mortar. The brick shall be painted to match existing joints

ATTACHMENT J-1502000-02
SPECIFIC WORK REQUIREMENTS

Mortar Joints	Damaged mortar joints shall be chipped out, cleaned, and dampened before repointed. Repointed joints shall match undamaged joints.
Hardboard Siding	Damaged hardboard siding shall be removed without damaging adjacent siding or underlayment. All joints shall be located on studs and the replacement siding shall be nailed at each stud. Replacement siding shall match the existing siding in color, texture, and material. Siding face and edges shall be factory primed and the back shall be factory sealed. Nails shall be of the type and size specified by the manufacturer and shall be driven flush. A 1/16 inch space shall be left between the siding and wood or metal trim. All joints shall be caulked.
Seams	Seams between window or door frames and exterior wall shall be caulked. Old joints shall be scraped and cleaned with a solvent recommended by the caulking manufacturer. The caulking shall be applied according to the manufacturer's directions.
Metal Flashing and Trim	These items shall be a minimum of 26-gauge galvanized steel or 0.025-inch aluminum, and or copper whichever matches the existing flashing
Wood Trim	Wood trim items shall be primed painted prior to installation. Surfaces to receive trim shall be thoroughly cleaned of sealant and paint build-up prior to installation of trim. Damaged or deteriorated insulation board or underlayment shall be replaced with material of the same type, thickness, and quality.
Shingle Roofing	Deteriorated shingles shall be removed without damaging those in unaffected areas. Damaged underlayment shall be cut and removed leaving approximately 8 inches of sound material exposed surrounding the repair area. New underlayment and shingles shall be installed as specified below. Vents and other projections through roofs shall be flashed according to roof flashing item below.
Built-Up and Elastomeric Roofing	Surfacing material shall be removed to a distance of at least 2 ½ feet beyond the area of disintegrated felts. The disintegrated felt layers shall be removed and replaced with new 15 pound bituminous saturated felts of approximately the same size, which will be mopped into place with hot bitumen. At least two additional layers of 15 pound bituminous saturated felt shall be applied. The edges of the first ply shall extend 9 inches beyond the area of disintegrated felts, the second ply shall extend 18 inches and ach later shall be mopped on with hot bitumen. Hot bitumen shall be applied to the repair area (at a rate of 60 pounds per square for coal tar pitch and into it, while hot, clean gravel embedded at a rate of 400 pound per square), or slate (at a rate of 300 pounds per square), shall be embedded in the bitumen while it is still hot. Repair of smooth surfaced built up roofs shall be accomplished in the same manner except for the removal and replacement of the aggregate surfacing and only asphalt bitumen shall be used. Elastomeric roofing shall be installed in accordance with manufactures recommendations.
NOTE: Built up roofing	In the case of built up roofing that appears to be leaking for the first time and has no historical data supporting recent repair work in the previous (6) months, the Contractor shall where practical consult with FMED and provide the Government with their recommendations and method of repair prior to commencing work. “Where practical” is taken to mean if the leak is not severe, and consulting with the Government can be accomplished in a timely manner.

ATTACHMENT J-1502000-02
SPECIFIC WORK REQUIREMENTS

Roofing Flashing	Existing flashing shall be rehabilitated to form an effective water seal. Areas covered with deteriorated bituminous cement shall be cleaned of all loose materials and debris and recoated with cement. Deteriorated mortar joints in chimneys intended to seal and anchor flashing shall be cleared of mortar for a minimum depth of 1 ½ inches and the flashing reinserted and the joint filled with mortar patch and finished to match existing joints. Damaged flashing around vent pipes, attic turbines, and other mechanical openings shall be replaced with appropriately formed flashing of either 0.032- inch aluminum or 24-gauge galvanized steel. Shingles around penetrations shall be removed without damaging adjacent roofing or underlayment. The flashing shall be securely nailed along one edge into the roof sheathing or roof support. Bituminous plastic cement shall be applied over the nail heads and the flashing edges. T he roofing shall be properly replaced and all nail heads and the joint between the flashing and vent shall be coated with bituminous plastic cement. Flashing around chimney and other large protrusions shall consist of cap and base flashing and crickets.
Trusses	All trusses (metal and wooden) shall be repaired or replaced as required to ensure the structure is safe for occupancy. When replacement or repair is required, care shall be taken to return the entire structure (roof, walk, etc.) to its original condition. While making repairs, inspection of other supporting members shall be made and deficiencies reported to the Contracting Officer.
Exterior Accessories and Storage Structures	Damaged, missing, defective, or badly deteriorated portions of exterior steps, landings, railings, and exterior storage facilities shall be replaced or repaired to a safe and usable condition. Loose items, such as railings, shall be secured. Damaged or deteriorated exterior floors and walls shall be repaired.
Building and Room Numbers.	When replacing missing, deteriorated or damaged building and room numbers, they shall be matched with existing numbers.
Name Plate Holders	Missing or damaged name plate holders shall be replaced with holders of the same type and quality as the existing. Loose screws shall be tightened and reseated as necessary.
Gutter and Downspouts	Clogged gutters and downspouts shall be cleaned out. Broken, damaged or leaking gutters and downspouts shall be mended and loose hangers and fastenings shall be tightened. Missing wire guards, hangers, and fasteners for gutters and downspouts shall be replaced with new material to match original as to gauge, type materials and finish.
Interior Concrete	Cracked, broken, or spalled areas shall be patched with a non-shrinking cement mortar. Areas shall be cleaned and all loose concrete removed. Underlying surfaces shall be chipped to ensure bond with the patch. Shallow spalled areas shall be chipped to provide space for an adequate patch thickness. The patch shall be finished even with the adjacent surfaces and finished to match existing texture.
Interior Walls, Ceilings, and Trim	Damaged and deteriorated walls, ceilings, and related trim shall be repaired or replaced to provide a safe, attractive interior. Wood trim items and ceilings fixtures shall be removed as necessary to provide access to the damages area. Upon completion of the repair activity, fixtures and trim shall be reinstalled, nails set and filled, and items repainted or refinished to restore them to their original condition. When removing wall or ceiling covering, the Contractor shall inspect the supporting structural system and notify the ACO immediately of any need for repair before proceeding.

ATTACHMENT J-1502000-02
SPECIFIC WORK REQUIREMENTS

Drywall Construction	Small dents and holes shall be repaired with spackle over a backing plate when necessary. Spackle shall be feathered on the adjacent surfaces. Patches shall consist of at least three coats with each completely dry before applying subsequent coatings. The final coat shall be lightly sanded and wiped with a damp cloth or sponge to remove all dust and cement deposits from surrounding surfaces. Loose nails shall be pulled and replaced with a new nail approximately 1 inch away from the existing hole and driven in to form a slight dimple in the surface. The dimple and the existing nail hole shall be filled and finished with spackle. Holes and other defects in wallboard between two studs or beams shall be repaired by removing a rectangle of gypsum board to the center of the adjoining studs or beams and two parallel lines across the board. Cuts shall be neat and shall not tear the paper covering. Edges of abutting sheets shall be sanded to allow for cement build-up in the joint. Replacement gypsum board shall be of the same thickness and texture as the adjacent sheets and shall be nailed into place onto the exposed studs or beams. Joints shall be taped and spackled using the procedure outlined above, reinforcing tape shall be embedded, wrinkle-free, and first layer centered over each joint. Cracks in drywall due to settlement of the wall shall be repaired as specified above for dents and holes.
Vinyl Wall Covering	Wall covering which has been ripped or otherwise damaged shall be repaired or replaced as necessary. Wall covering shall be repaired if the damaged area can be patched and not be noticeable. The patch shall overlay the damaged area 1/2 inch of all sides and be continuous with the pattern of the wall covering. The patch shall be glued in place with an adhesive conforming to the wall covering manufacturer's recommendations. Wall covering which is extensively damaged or for which a matching wall covering is not available shall be repaired by replacing the wall covering on the entire wall. If matching wall covering is not available shall be repaired by replacing the wall covering on the entire wall. If matching wall covering is not available, the Contractor shall find a comparable substitute. The Contracting Officer shall approve all replacement wall coverings which do not match the existing wall coverings. Replacement wall covering shall be hung according to the manufacturer's recommendations.
Woodwork	Sections of woodwork containing rotted or badly deteriorated wood shall be removed without damaging adjacent surfaces. The surface on which such trim was applied shall be cleaned of all dirt, oil, grease, mildew, moisture and debris and new woodwork matching the existing shall be installed, with nails set and filled. Woodwork shall be secured where loose. Protruding nails shall be set and filled. Rough woodwork shall be sanded to remove paint or varnish runs and abrasions. Holes shall be filled and lightly sanded to provide a smooth, uniform surface. Filled areas to be varnished shall be stained to match surrounding areas. Areas of chipped or peeling paint shall be lightly sanded and wiped clean to remove debris. All repaired and replaced woodwork shall be finished to match surrounding woodwork. Trim to be painted shall be sanded, cleaned, and sealed.
Vinyl Baseboards	Deteriorated or damaged sections of vinyl baseboard shall be removed. In areas of loose, deteriorated, or missing baseboards, the wall and floor surfaces shall be cleaned of all dirt, oil, grease, mildew, moisture, adhesive, and debris. Loose baseboards shall be secured to the wall with an adhesive which conforms to the manufacturer's instructions in the areas where baseboards are missing, damaged, or deteriorated.

ATTACHMENT J-1502000-02
SPECIFIC WORK REQUIREMENTS

Floors	Damaged or deteriorated flooring, including wood block factory floors (See Clause C2.), shall be repaired or replaced to provide a uniform, aesthetic surface. The Contractor shall inspect exposed portions of subfloor during repair or replacement activity. Any evidence of structural damage or deterioration shall be immediately reported to the ACO before proceeding.
Resilient Tiles.	Damaged or deteriorated tiles shall be replaced with matching tiles. Damaged tiles shall be removed without affecting adjacent tiles and the affected areas shall be cleared of all debris and moisture to provide a clean, uniform, dry surface for the installation of new tile. Installation shall be in accordance with manufacturer's instructions. The repaired areas shall be thoroughly cleaned and waxed to provide a uniform surface.
Vinyl Sheet Flooring.	Areas of flooring having deep gashes or other defects shall be replaced. A replacement section matching existing flooring which is cut larger than the damaged area shall be taped over the defect such that the decorative flooring pattern is continuous. To ensure a properly fitting patch, the Contractor shall cut through both layers of vinyl around the damaged area. The patch and the section of damaged flooring shall be removed and the underlying surface shall be cleaned of all moisture, adhesive, and debris. The patch shall be installed as recommended by the flooring manufacturer. Loose flooring shall be anchored using an adhesive recommended by the flooring manufacturer. The repaired area shall be thoroughly cleaned and waxed to provide a uniform surface.
Finished Wood Flooring	Loose or slightly warped flooring shall be secured with screw- type flooring nails driven at 45 to 50 degree angle. These nails shall be set and filled with a wood putty. Scarred flooring which has holes and gashes less than ½ inch wide shall be filled and stained. All other damaged flooring shall be removed and replaced without damage to adjacent walls or flooring. Damaged subflooring shall be removed and replaced with new exterior grade plywood. The subfloor shall be covered with a layer of 15 pound asphalt saturated felt lapped 4 inches at edges and ends. The replacement flooring shall be of the same quality, type and species as the existing. The replacement flooring shall be nailed with screw-type flooring nails and be blind nailed at an angle of 45 to 50 degrees or top nailed vertically using pilot holes where necessary to prevent splitting. Where possible, nails shall be driven into supporting floor joists. Nail heads shall be set and filled. All flooring shall fit tightly, without gaps. Replacement flooring or damaged flooring which requires touch-up refinishing shall be sanded smooth and swept clean. One coat of wood paste filler shall be applied and allowed to fully dry and then two coats of varnish shall be applied as instructed by the manufacturer.
Wood Doors	All exterior wood doors shall have solid cores. Softwood exterior doors shall be water-repellent treated. Interior wood doors shall be of the same species and have the same finish as the original door. Replacement exterior doors shall be installed during the same workday as removal of original door. Scarred areas of door shall be sanded, wiped clean with a low toxicity solvent, sealed, and finished to match surrounding door surface. All replacement doors shall be installed with the hardware from the damaged door unless the hardware is unrepairable. Small holes in door faces shall be filled and finished to match surrounding door surface. Doors shall be planed (to include appropriate bevel) to provide a minimum 1/16 inch clearance after painting between door and adjoining head and jambs. The bottom of the door shall be trimmed to provide adequate clearance above the floor.

ATTACHMENT J-1502000-02
SPECIFIC WORK REQUIREMENTS

Large and Small Sliding Doors (Warehouse Doors)	All metal and wooden sliding doors will be maintained in good working order. The Contractor shall ensure metal doors are kept free of rust and wooden doors are water-repellent to eliminate wood rot. All locking devices (including but not limited to, bars, hasp and slides), shall be in operational condition, and all runners, guides, rollers, pulleys, and weights shall be properly aligned and lubricated to ensure smooth operation in opening and closing. Weather stripping shall be inspected and repaired or replaced when necessary to enhance heating and cooling efficiency.
Screens and Screen Doors	Oxidation deposits shall be removed from metal parts. The affected area shall be cleaned and protective coating of paste wax shall be applied. Replacement screening shall be of the same material of existing metallic screening. Small holes in screens shall be repaired with a patch matching the existing screening. The free end of wire patches shall be bent around the existing screen to secure patch in position. Exposed screening ends shall be cemented with a colorless plastic cement. No exposed screening ends shall protrude from screen. Warped screen doors and frames shall be straightened if possible to fit squarely in opening. If beyond repair, warped items shall be replaced.
Windows	Damaged, deteriorated, missing, or inoperative window and door components shall be repaired or replaced to provide a sound, serviceable, weather tight installation.
Hardware	Hardware items shall include, but not be limited to, latches, keepers, hinges, door and window hardware, and other types of builder's hardware. Exterior and interior hardware items shall be repaired or replaced as necessary. Operating hardware shall be lubricated and adjusted as needed. Missing screws shall be replaced. Small damaged parts such as striker plates and seal inserts shall be replaced. Replacement hardware shall match existing hardware in type, size, quality, and finish and meet the Building Hardware Manufacturer's Association Product Standards (BHMA). Hardware shall be installed in accordance with the manufacturer's recommendations.
Stairs	The Contractor shall secure loose treads, risers, stringers, handrails, brackets, and other components. Badly damaged stair and handrail components shall be finished to match original components. Damaged stair finish shall be repaired in accordance with paragraph ff. above. Trim items susceptible to damage during the repair activity shall be removed and reinstalled upon completion of the repair activity.
Traverse and Curtain Rods	Sagging or nonfunctioning rods shall be restored to an operating condition, if possible. If beyond repair, rods shall be replaced. Loose brackets shall be secured. Broken cords shall be replaced. Broken or missing drapery slides shall be replaced. Rods shall be level and parallel with the ceiling. Additional support b r a c k e t s shall be installed to support sagging rods.
Blinds	Venetian blinds and "mini-blinds" shall be restored to an operating condition. Cracked or damaged slats shall be replaced. Broken or worn cords shall be replaced. Soiled or worn tapes shall be replaced. Loose brackets and supports shall be secured. Damaged or deteriorated hardware shall be replaced or reworked to operating condition. If beyond repair, blinds shall be replaced.

ATTACHMENT J-1502000-02
SPECIFIC WORK REQUIREMENTS

Bathroom Accessories	This item shall include, but is not be limited to, paper holders, soap trays and dispensers, towel bars, shower curtain rods, and medicine chests. All bathroom accessories shall be the responsibility of the Contractor.
General	Loose items shall be anchored by tightening or replacing screws or by using a suitable adhesive. Damaged or missing items shall be replaced with items matching the original. Replacement hardware shall conform to the Building Hardware Manufacturer's Association Product Standard (BHMA). Hardware items requiring lubrication shall be lubricated and restored to an operable condition. Repairable rusted metal components shall be cleaned of all rust, coated with a rust inhibitor, and restored to an operational condition.
Mirrors	Cracked or broken mirrors shall be replaced. All mirror fragments shall be removed from the site.
Caulking	Damaged caulking around sinks, shower stalls, tiles and accessories shall be chiseled out and replaced with non-silicone base sealant unless otherwise specified by the Contracting Officer. The sealant shall be applied according to manufacturer's recommendations.
Other	Includes elevated work platforms, guardrails, machine platforms, steps, special stacking blocks, rack flooring, partitions, metal doors, furniture repair and other miscellaneous carpentry work in support of the mission of the MCAS.
Metal Working	The Contractor shall be responsible for the maintenance, repair, and replacement of metal components of buildings and structures, installed building equipment, such as exhaust fans, and shall fabricate and install metal components in support of other repair activities. Metalworking shall include heating and bending to form metal shapes, drilling, torch cutting, hammer forging, grinding, sawing, and fitting of metal parts. The Contractor shall also be responsible for welding processes. Welding shall be performed on light gauge, heavy gauge, and hardened metals in flat, vertical, horizontal, and overhead positions. Processes include preheating, brazing, bead welding, tack welding, flame cutting, pressure welding, and heat treating. Metalworking responsibilities shall also include the full range of metalworking and sheet metal activities which include, but are not limited to:
Metal Components.	Fabricating, installing, repairing, and replacing parts or complete assemblies as required for: metal components of buildings (except door hardware), metal parts of installed building equipment, roadway structures, drainage structures, metal signs, installing anchorages in floors and walks to secure pilfer able items.
Other	Includes installation, fabrication and repair of ductwork for HVAC systems, required production processes, and PVC and other plastic materials.

ATTACHMENT J-1502000-02
SPECIFIC WORK REQUIREMENTS

General Sheet Metal	Contractor personnel must possess the skills necessary to be able to interpret blue prints, drawings, sketches, work orders, templates and patterns as guides for laying out and cutting materials from a variety of sheet metal stocks. Some of which can include monel metal and stainless steel. The Contractor shall be able to manipulate metal to construct single and double hem edges and seams, dovetail and lock seams, set in and burred bottom seams, as well as wired or rolled edges and flanges. The Contractor will be required to lay out and cut materials for any combinations for square, rectangular, circular, conical, cylindrical, oval, irregular, and transitional shapes allowing for seams, joints, laps and shrinkage. The ability to shear, bend and form metal parts into desired shapes with hand, power tools and equipment shall not be beyond the Contractors capability. The Contractor shall be able to determine dimensions by application of basic shop mathematics and be able to utilize scribing tools, dividers, rulers, and other measuring devices. Some examples of equipment that the Contractor shall be able to operate are shears, brakes, folders, formers, crimping, burring, bending machines and associated hand tools. The Contractor shall repair, modify, and/or fabricate metal items for all types of equipment, including light or intricately made mechanical parts that must fit in assemblies where close tolerances are required. The Contractor shall possess the capability to plan, layout, position, and clamp work; manipulate heat for metal to prevent distortion, use templates, jigs, blueprints and other guides to repair, modify or fabricate metal items for all types of material.
Painting	The Contractor shall be responsible for the painting, limited to 200 square feet of signs and touch-up work caused by damage from natural causes or repair work. The Contractor shall also be responsible for complete "paint outs." The Contractor shall prepare surfaces, mix paints, and apply prime, intermediate and finish coats. Paint includes all enamels, paints, varnishes, stains, and other coatings whether primer, intermediate or finish coat. Paint used in touch-up painting shall blend with the color and texture of surrounding areas. Touch-up painting shall be accomplished as related item to a maintenance activity. The Contractor shall be responsible for moving, resetting, and protecting occupants' furniture and for protecting all Government-owned property during the work performance. When performing spray painting operations, precautions shall be taken to ensure compliance with 29 CFR 1910.
Painting Responsibilities	Painting responsibilities shall include but are not limited to: 1) determining type of paint best suited for job, mixing colors for consistency needed to do the work, 2) performing free hand and gold leaf lettering, and silk screening of signs, 3) working on a variety of surfaces such as metals, wood, and Masonite; 4) repainting and touching up signs in place on buildings, structures, and appurtenances, 5)painting all repairs (paint used for touch-up and repairs shall blend with the color and texture of surrounding areas); 6) taping, spackling, and repairing gypsum board surfaces; 7) stripping, sanding, and refinishing wood floors of various types; 8) moving, resetting, and protecting furniture and equipment 9) protecting all government owned property during the work performance; and 10) stripping, sanding and refinishing to preserve aesthetics of items that cannot be replaced by items of equal quality.

ATTACHMENT J-1502000-02
SPECIFIC WORK REQUIREMENTS

Materials	Paints shall be in sealed containers that plainly show the designated name, formula, or specification number, batch number, color date of manufacturer's directions, and name of manufacturer, all of which shall be plainly legible at the time of use. Pigmented paints shall be furnished in containers not larger than 5 gallons. The use of paint containing more than 0.5 percent lead by weight in the total nonvolatile content of the paint shall be strictly prohibited for painting any surface. Upon request from the ACO, the Contractor shall furnish a supplier's record of batch production data and test results for each batch, except that batch production data may be limited to weight per gallon, viscosity, fineness of grind, drying, time, color, and gloss. When the required quantity of material of a particular color is 5 gallons or less, a proprietary brand of material similar to that specified above may be waived. All paint materials shall be subject to the approval of the ACO.
Plaster or Wallboard Surfaces	Damaged surfaces shall be repaired. Surfaces which chalk severely shall be prepared with conditioner.
Wood Surfaces	Woodwork, including cabinets and doors, shall be repaired. Surfaces painted with a gloss or semi-gloss paint shall be dulled with a surface conditioner. Knots and resinous wood shall be treated with a knot sealer.
Wood Windows and Doors	Window screens and door screens shall be removed before painting. All screen frames shall be painted on faces and edges and allowed to dry; then replaced and fitted. Window runners shall not be painted, but cleaned and coated with boiled linseed oil.
Ferrous Metal Surfaces	All ferrous metal surfaces shall be spot primed. These surfaces shall be scraped, wire brushed and washed clean before painting. Exposed nails and other ferrous metal on or in contact with surfaces to be painted with water-thinned paint shall be spot-primed first.
Galvanized and Zinc Copper Alloy Surfaces	All galvanized surfaces shall be cleaned with a phosphoric acid wash and spot primed with galvanized surface primer.
Masonry and Concrete Surfaces	Surfaces shall be roughened where necessary to provide adhesion. Previously painted areas shall be dulled with a surface conditioner. Surfaces which chalk severely shall be prepared with a conditioner. Surfaces which experience water leakage shall be coated with an epoxy paint.
Pipe Coverings	"Size" shall be applied for adhesion to bare surfaces of pipe coverings.
Electrical Fixtures	Electrical outlet covers, switch covers, and fixtures shall be masked or removed before painting and uncovered or reinstalled prior to work completion.
Application of Paint	Application of Paint. Application of paint shall be by brush, roller, or spray. Interior paint shall be applied in dust-free conditions in accordance with the manufacturer's recommendations. Exterior paint shall not be applied on rainy, foggy, or windy days. The outdoor or indoor temperature shall meet the manufacturer's recommendations. Each coat shall be prepared in accordance with the paint manufacturer's recommendations before the next coat is applied. Each coat of paint shall be of sufficient thickness to completely cover the previous coat or surface. Each coat shall be sanded and dusted as prescribed by the paint manufacturer to produce a finish smooth and free from runs, sags, or other surface preparation defects. Paint surfaces adjoining other materials or colors shall be sharp and clean without overlapping. Windows that are stuck from being painted shall be freed up 5 days after completion of work to assure ease of operation.

ATTACHMENT J-1502000-02
SPECIFIC WORK REQUIREMENTS

Sign Painter	Designs, performs layout, paints signs, posters and identifying markings on a variety of materials and surfaces. Performs layout of various styles of lettering, makes preliminary patterns; mixes paints, blocks in and shades letters and designs. Installation, removal and upkeep of signs, sign posts and frames. Responsible for fabrication and installation in accordance with code. Testing reflectivity of signs, washing signs, removal of limbs, brush, etc. that obstruct visibility of signs.
	Pavement markings, street striping, work required. Knowledge of painting equipment and characteristic of various paints and varnish. Working knowledge of 3M products, materials and equipment required.
	Ability to freehand draw various designs, logos, emblems, etc., in a wide range of sizes to produce a finished product. Knowledge of woodcutting equipment, metal shears and brake.
Plumbing	The Contractor shall be prepared for repairing leaks, replacing washers and valve seats and refinishing valve seats, replacing faucets, stoppers, drains, and water supply lines. Additional work includes, but is not limited to: cleaning out sluggish sinks; cleaning sink traps; re-caulking various plumbing fixtures; resetting commodes; repairing or replacing flush valves; auxiliary valves, pistons, diaphragms, and handles to flush valves; replacing spuds and spud washers, vacuum breakers, tail pipes and flush valves; replacing shower heads and necks; replacing broken water tank covers and commode seats; making general visual inspection of all plumbing fixtures and pipes; tightening bolts, nuts, and pipe connections; repairing drinking fountains; and repairing electric and gas water heaters. Prior to removal of insulation, the Contractor shall determine and record the presence or absence of asbestos fibers. This record shall be made available to the Contracting Officer as requested. If asbestos is present, precautions shall be taken to adhere to all state and federal regulations.
Clogged Toilet or Sink Drains	Work may include disassembly of interior piping and traps, and cleaning out pipes.
Loss of Water Pressure	If loss of water pressure is due to blockage or leakage within the piping, the Contractor shall determine the source of the problem and repair it as a Service Order. Work may include disassembly of interior piping, cleaning out of piping, or replacing of piping.
Overflowing Plumbing Fixtures	The water supply shall be turned off in the event of an overflowing plumbing fixture. Faulty valves or faucets and blockages shall be repaired and the service restored as quickly as possible. The Contractor shall remove the water from floors.
Back Flow Floor Drains and Disposal Unit	Back flowing floor drains and disposal units shall be treated as clogged drains discussed above.
Loss of Hot Water	The water supply shall be turned off in the event of leaking hot water pipes or water heaters. Leaking piping or water heaters shall be repaired or replaced and service restored as quickly as possible. While performing the needed repair or replacement, the Contractor shall also repair any damage caused by the defective item to restore the building or facility to its original condition. For example, replacement of a leaky pipe would also include repair of water damage to the surrounding walls, floor, and/or ceiling.

ATTACHMENT J-1502000-02
SPECIFIC WORK REQUIREMENTS

Electrical	The Contractor shall be responsible for all electrical work in the interior electrical system including maintenance, preventive maintenance, repair, and installation and removal. The interior electrical system includes all circuits and components within a structure except for production machinery and circuits between a production machine and a panel board. Panel boards are the responsibility of the Contractor.
Lighting	The Contractor shall establish a relamping program as required in Annex 1502000. All relamping is included in the fixed price.
Machine Shop	The Contractor shall maintain the machine shop in a clean and orderly condition. All Government-furnished equipment therein shall be maintained in good operating condition and in accordance with the manufacturer's recommendations. The Contractor shall instruct his shop employees in proper safety precautions. The Contractor shall maintain and repair miscellaneous equipment in accordance with the preventive maintenance and service requirements specified.
Other Requirements	
Flag Poles	The Contractor shall ensure that damaged or deteriorated flag poles are replaced or repaired to a functional, safe, and presentable condition as required. Inspection of foundation, mast, and hardware (pulley, clips, and line) shall be required to establish overall condition. Work to be performed will include but not be limited to:
	Repair of Concrete Foundation. The Contractor shall perform thorough removal of damaged areas, cleaning of cavity, and repair with mortar that matches the primary structure. Painting of foundation when required shall be accomplished with an exterior masonry paint which meets applicable Federal specifications.
	Painting of Mast. Paint mast in accordance with paint section above.
	Replace or Repair of Hardware. Pulley and flag clip hardware shall be weather durable, minimum maintenance type. Line will be nylon/cotton, long lasting.

ATTACHMENT J-1502000-03
REFERENCES AND TECHNICAL DOCUMENTS

Reference	Title
	Pre-Acceptance Inspection and Tests of Installation of Boiler Equipment, Unfired Pressure Vessels (5 Cu. Ft. and Above), Auxiliary Fuel Incinerators, and Fire Protection Equipment).
	A.S.M.E. Boiler and Pressure Vessel Codes
	Sheet Metal and Air Conditioning Contractors National Association Inc. (SMACMA)
	Testing, Balancing, and Adjusting of Environmental Systems
	Clean Air Act Amendment of 1990
	National Fire Codes, Latest Edition
	American Society of Heating, Refrigerating and Air Conditioning Engineers Inc. (ASHRAE) Hand Books, Latest Editions
ASME A17.1	Safety Code for Elevators and Escalators
DoD Regulation 5500.1-R	Security Manual
MCO _ P11000.7c	Work Control
MIL-HDBK 274	Electrical Grounding Aircraft
NAVFAC MO-114	Maintenance and Operations of Building Plumbing, Heating, and Ventilation Systems (Volumes I, II, and III).
NAVFAC MO-ll5	Maintenance and Operations of Refrigeration and Air Conditioning Systems and HVAC Controls (Volumes I, II, and III)
NAVFAC MO-118	Inspection of Vertical Transportation Equipment
NAVFAC MO-200	Facilities Engineering Electrical Exterior Facilities
NAVFAC MO-205	Central Heat & Steam Electric Generating Plants (Volumes I – V)
NAVFAC MO-206	Operation and Maintenance of Air Compressor Plants
NAVFAC MO-209	Maintenance of Steam, Hot Water, and Compressed Air Distribution Systems
NAVFAC MO-230	Petroleum Fuel Facilities
NAVFAC MO-306	Cathodic Protection
NAVFAC MO-307	Corrosion Control
NAVFAC MO-321	Facilities Management
NAVFAC MO-322	Inspection of Shore Facilities
NAVFAC MO-912	Operation, Maintenance, and Repair of Auxiliary Generators
NAVFAC MO-324	Inspection and Certification of Boilers & Unfired Pressure Vessels
NAVFAC P-307	Management of Weight Handling Equipment
NAVFAC P-309	Color Coding for Naval Shore Facilities
NAVFAC P-5055 Series	Radiation Health Protection Manual
NAVFACINST 11230.1	Inspection, Certification, and Audit of Crane and Railroad Trackage
NAVFACINST 11300.27B	Environmental Quality Boiler Tune Up Program
NAVFACINST 11300.28	Boiler Efficiency Improvement Program
NAVFACINST 11300.33	Handling, Storage, and Inspection of Shore to Ship Steam Hoses
NAVFACINST 11300.34	Color Coding Information
NAVFACINST 11300.36	Operation and Maintenance Guidelines for Shore Activity Power Generation and Heating Equipment
NAVFACINST 11300.37A	Energy and Utilities Policy
NAVFACINST 11300.7	Minimum Attendance for Shore Boiler Plants
NAVFACINST 4790.1 Series	Pressure Testing of Steam and Air Hoses
NAVMED P-5010-4	Swimming Pools and Bathing Places
NAVMED P-5055 Series	Radiation Health Protection Manual
NAVSEA OP-5	Ammunition and Explosives Safety Ashore
NEESA 20.2-028B	PCB Program Management Guide
NFPA 780	Standard Development
NFGS-l520, l5705, and l5707.	NAVFAC Specifications
OPNAVINST 4790.1	Par 10.6.11.3
OPNAVINST 5100	Par 10.6.11.3

OPNAVINST 5100.1	Environmental Readiness Program Manual
OPNAVINST 5100.23 Series	Navy Safety and Occupational Health Manual
OPNAVINST 5100.8 Series	Navy Safety and Occupational Health (NAVOSH) Program
OPNAVINST 5530.14	Physical Security and Loss Prevention Manual
OPNAVINST 6470.3 Series	Navy Radiation Safety Committee
SECNAVINST 5510.36	Information Security Program
UFC-3-230-2	Operation and Maintenance Water Supply Systems
UFC 3-430-07	Operations and Maintenance: Inspection and Certification of Boilers and Unfired Pressure Vessels
UFC-3-570-06	Cathodic Protection Systems
UFC 3-600-01	Fire Protection Engineering for Facilities
UFC 3-601-02	Fire Protection Systems Inspection, Testing, and Maintenance
UG-2029-ENV	Cross Connection Control and Backflow Prevention Program

ATTACHMENT J-1502000-04
FACILITY PROPERTY INVENTORY

See Attachment J-1502000-04 listed in MCAS Beaufort BOS Facility Investment Inventory

ATTACHMENT J-1502000-05
SITE MAPS

Site Maps available upon request from Contracting Officer upon contract award

ATTACHMENT J-1502000-05-01
SECURITY FENCE MAP

Security Fence Map available upon request from Contracting Officer upon contract award

ATTACHMENT J-1502000-05-02
STORM DRAIN MAP

Storm Drain Map available upon request from Contracting Officer upon contract award

ATTACHMENT J-1502000-06
HISTORICAL SERVICE ORDER WORKLOAD

See Attachment J-1502000-06 listed in MCAS Beaufort BOS Facility Investment Inventory

ATTACHMENT J-1502000-07
AIRPLANE SUN SHADE INVENTORY

See Attachment J-1502000-07 listed in MCAS Beaufort BOS Facility Investment Inventory

ATTACHMENT J-1502000-07-01
AIRCRAFT SUNSHADE/PREVENTIVE MAINTENANCE PROGRAM

Conduct semi-annual PM, annual PM and bi-annual cleaning of 77 sunshades.
Coordinate with Big Top to provide one Preventive Maintenance training session.

6 Month PM:
- Check for any loose cables, tighten until snug.
- Check all bolts and nuts for proper torque, if loose tighten.
- Check lighting.
- Check GFI outlet.
- Check all fabric for holes, tears, scuffs or scrapes and repair where needed. *

*See OEM recommendations for guidance on repairing fabric.

12 Month PM:
- Check fabric for proper tightness.
- Tighten threaded rods or buckle straps to tension main fabric, if necessary, until fabric is tight.
- Check and tighten any lacing that may have come loose. Pull excess slack and retie.
- Check frame for any corrosion and treat with a corrosion inhibitor. Can use a brush and galvanized paint to touch up any corrosion.
- Check lighting.
- Check GFI outlet.

B-Annual Cleaning:
Bi-annually clean the fabric of the sunshades.*
*See OEM recommendations for guidance on cleaning the fabric.

Sunshade Solar Panels Listed Below:

SUNSHADE SOLAR PANELS

SINGLE SHELTER BOM (X6)

QTY	ITEM	TYPE
6	SolarWorld SWA 295 Plus Black Frame Mono Solar Panels	Solar Panels
1	Four Star Solar MS4024PAE Single Magnum with Classic 150 Power Center	Power Centers
1	Electrical Design Diagram	Services
12	Heyco Products Inc. HEYClip Sunrunner Cable Clip - S-6405 - Single	Racking
6	IronRidge XR100 Option D racks per 65" X 39" Module inc. Grounding	Racking
2	MidNite Solar Waterproof Strain Relief With 2 Holes, 0.25 to 0.27" Cable Diameter	Cables
1	Four Star Solar Waterproof Strain Relief With One Hole	Cables
2	Four Star Solar 4/0 - 120" UL Cable (White)	Cables
2	Four Star Solar 4/0 - 120" UL Cable (Red)	Cables
2	Four Star Solar MC4 10 AWG - 50' Cable Extension	Cables
1	Multi-Contact USA Amphenol H4 Universal Unlocking Tool	Tool
1	MidNite Solar MNSPD-300-DC	Surge Suppressor
1	MidNite Solar MNPV6	Combiner Box
2	MidNite Solar MNEPV-15	Breakers
6	MT Solar - 2" Pole Series for (1) 60 cell module	Pole Mount
4	Trojan Batteries - 24V system 4x6v IND13-6v	Batteries
1	enclosed electronic enclosure N3R	Enclosures
1	Vented battery enclosure N3R	Enclosures
6	Lithonia Flood	Fixtures

BOM For Lighting only shelters (X8)

6	Lithonia Flood DSXF3 LED 6 P1 40K WFL MVOLT YKC62 DDBXD	Fixtures

ATTACHMENT J-1502000-08
SEPTIC TANK INVENTORY AND LOCATIONS

See Attachment J-1502000-08 listed in MCAS Beaufort BOS Facility Investment Inventory

ATTACHMENT J-1502000-09
HVAC WATER TREATMENT WATER LOOPS

See Attachment J-1502000-09 listed in MCAS Beaufort BOS Facility Investment Inventory

ATTACHMENTJ-1502000-09-01
HVAC WATER TREATMENT WATER REQUIREMENTS INFORMATON

HVAC WATER TREATMENT REQUIREMENTS

A. General Description
The Contractor shall provide and maintain condenser water, glycol water and chilled water treatment program. The program shall minimize the following:

1. Corrosion
2. Scale
3. Deposition
4. Microbiological activity

B. Plan
1. Preliminary Report

Submit a written report indicating any deficiencies in the equipment and systems that would preclude testing and treatment of the systems.

2. Submittal

Submit a written agenda prior to start of cooling plant operation. Include the following:

a. General description of the system, and operational cycles;
b. A listing of water measurements to be performed;
c. General description of methods to be used, including sample forms; and,
d. A listing of chemicals to be provided, including safety data sheets.

C. Program Treatment
The water treatment program shall include the following:

1. Corrosion Control

a. Mild steel corrosion rates shall be maintained below 2.0 mils per year.
b. Perform corrosion control coupon testing in the condenser water system in accordance with ASTM D 2698, Method B, coupon test. Provide coupon holders, as shown by ASTM 2688, Figure 3. Corrosion rates shall be measured using unpretreated mild steel corrosion test coupons in the holders. The condenser water flow shall be regulated to maintain5.0 gpm across the corrosion test coupons. Examine the coupons and photograph the results of the tests, as recommended in ASTM D 2688.Submit a report of the test including, results, calculations, discussions, and recommendations for immediate remedial action as required.
c. Copper and Copper nickel coupon rates shall be below 0.3 mils per year at all times.
d. The corrosion control program shall be designated to minimize corrosion" in stagnant water areas.
e. If a particular level of corrosion inhibitor does not provide the desired and specified results, the Contractor shall provide additional chemical necessary to yield specified results.

ATTACHMENTJ-1502000-09-01
HVAC WATER TREATMENT WATER LOOPS

f. Maintain glycol water corrosion inhibitor levels in accordance with the glycol manufacturer's recommendations.

2. Scale Control

a. No calcium type scale will be permitted.
b. Scale inhibitor shall be provided to prevent any calcium carbonate or calcium phosphate scale.
c. pH control limits shall be designed to prevent scaling. The use of acid will not be permitted.

3. Deposit Control

a. Specified deposit control agents shall be provided to prevent and minimize suspended solids deposition with the exchangers.
b. The Contractor shall specify the PPM level of deposit control agents recommended for the system.
c. pH control limits shall be designed to prevent scaling. The use of acid will not be permitted.

4. Microbiological Control

a. The total heterotrophic bacteria count is in the condenser water systems shall never exceed 100,000 organisms per mil.
b. Algae growth shall be prevented.
c. The total lethal dosage rate of biocide recommended shall never drop below 25 percent level within the condenser water system.
d. The PPM dosage rate shall listed for each biocide recommended, with the specified additional frequency schedule.
e. The PPM active ingredient level shall be specified for each biocide recommended.

5. Monitoring shall include, but not limited to:

a. Inlet and outlet condenser water pressure at condenser *
b. Inlet and outlet glycol water pressure at evaporator.*
c. Chilled compressor efficiency -Kw/Ton.*
d. Makeup water chemical analysis.**
e. Makeup water quantity.*
f. Amount of Chemical provided.*
g. Glycol concentration and levels of corrosion inhibitors. **

*Informational Note: The Government has found that on previous contracts a frequency of weekly has maintained services at an acceptable level.
** Informational Note: The Government has found that on previous contracts a frequency of monthly has maintained services at an acceptable level.
Operation, maintenance, care, upkeep, and repair of all components of the HVAC systems including the water treatment are included.

ATTACHMENT J-1502000-09-02
BUILDING 2145 AND 2146 HUMIDITY CONTROL SYSTEM

Components of the Humidity Control Systems:
1. Dri-Steem Water Treatment – 200 Series Reverse Osmosis System
2. Dri-Steem Vaporstream Electric Humidifier – VLC-42-2-D1
3. Dri-Steem Vapor-Logic Version 6 Humidifier Control Systems
4. Dri-Steem Drane-kooler Water Tempering Device
5. Dri-Steem, Pre-Water Treatment System

See appropriate O&M manuals for Preventive Maintenance Checks and Services

ATTACHMENT J-1502000-10
DIRECT DIGITAL CONTROLS SYSTEM INVENTORY

See Attachment J-1502000-10 listed in MCAS Beaufort BOS Facility Investment Inventory

ATTACHMENT J-1502000-10-01
DIRECT DIGITAL CONTROLS POINTS INVENTORY
Points Inventory is located in excel file J-1502000-10-01

ATTACHMENT J-1502000-11
BOILER AND UPV INVENTORY

See Attachment J-1502000-11 listed in MCAS Beaufort BOS Facility Investment Inventory

ATTACHMENT J-1502000-12
SECURITY SYSTEMS AND EQUIPMENT INVENTORY

See Attachment J-1502000-12 listed in MCAS Beaufort BOS Facility Investment Inventory

ATTACHMENT J-1502000-13
COMPRESSED AIR SYSTEMS INVENTORY

See Attachment J-1502000-13 listed in MCAS Beaufort BOS Facility Investment Inventory

ATTACHMENT J-1502000-14
CATHODIC PROTECTION RECTIFIER REPORT

See Sample Report Below:

Sample (Monthly)

Date: _____ _____

Insp. By: ____ __

Cathodic Protection Rectifier Report
MCAS Beaufort, South Carolina

Rectifier		**Tap Setting**		**D.C. Output**		**Shunt Conversion**	**Recommended Range**	
No.	**Name**	**C**	**F**	**V**	**A**	**mV to Amps**	**Volts**	**Amps**
A-1	Tank 567					mV x 15A / 50mV = Amps		
A-2	Tank 568					mV x 15A / 50mV = Amps		
B-1	Tank 551					mV x 15A / 50mV = Amps		
B-2	Tank 865					mV x 10A / 50mV = Amps		
C-1	Tank Nos. 401 & 402					mV x 10A / 50mV = Amps		
X-1	Quilali Road					mV x 15A / 50mV = Amps		
X-2	Airfield					mV x 15A / 50mV = Amps		

ATTACHMENT J-1502000-14-01
CATHODIC PROTECTION RECTIFIER REPORT

Sample (Quarterly)
CATHODIC PROTECTION QUARTERLY STRUCTURE-TO-ELECTROLYTE POTENTIAL REPORT

FROM: **MCAS BEAUFORT, SC**						**INSPECTOR**	**DATE**	**QUARTER ENDING**
TS No.	**LOCATION OR IDENTIFICATION FUEL TRANSFER PIPELINES**	**P/S VOLT**	**SHUNT**			**GPS COORDINATES**	**REMARKS***	
			MV	**RES**	**MA**			
567	AST No. 567 ADJACENT TO RECTIFIER						USE RECTIFIER'S NEGATIVE TERMINAL AS FOR STRUCTURE CONNECTION	

568	AST No. 568 ADJACENT TO RECTIFIER						USE RECTIFIER'S NEGATIVE TERMINAL AS FOR STRUCTURE CONNECTION
00	HIGH SIDE OF INSULATION FLANGE TANK FARM ALPHA					N 32□ 27.979 W 80□ 41.627	
01	TANK FARM ALPHA@ RISER TOWARD TANK FARM BRAVO					N 32□ 27.979 W 80□ 41.627	
02	QUILALI ROAD 20 LF BEFORE POWER POLE 1102					N 32□ 27.919 W 80□ 41.783	
03	QUILALI ROAD NEAR ROAD BEND					N 32□ 27.916 W 80□ 41.977	
04	IN CLEARING BETWEEN QUILAI ROAD AND MOORE STREET AT ORANGE FLAG					N 32□ 27.913 W 80□ 42.177	
05	ADJACENT TO MOORE STREET					N 32□ 27.906 W 80□ 42.370	BLOCKED OFF BY NEW FENCE
06	BETWEEN MOORE STREET AND TANK FARM BRAVO – LOST TEST STATION					DESTROYED	MAY BE RESTORED IN FUTURE
07	TANK FARM BRAVO PIPE RISER (TOWARD TANK FARM ALPHA)					N 32□ 27.860 W 80□ 42.744	
07B	ABOVE ISOLATION FLANGE AT TEST STATION NO. 07					N 32□ 27.860 W 80□ 42.744	
551	AST No. 568 ADJACENT TO RECTIFIER						USE RECTIFIER'S NEGATIVE TERMINAL AS FOR STRUCTURE CONNECTION
C1	TANK 865 C1						THIS TEST STATION IS AN EXPLOSION-PROOF JUNCTION-BOX LOCATED ADJACENT TO AST NO. 865 WITHIN TANK FARM BRAVO (DAY TANKS)
C2	TANK 865 C2						
C3	TANK 865 C3						
C4	TANK 865 C4						
Z1	TANK 865 Z1						
Z2	TANK 865 Z2						
Z3	TANK 865 Z3						
Z4	TANK 865 Z4						
08	TANKFARM BRAVO: PIPE RISER (TOWARD FLIGHT LINE)					N 32□ 27.979 W 80□ 41.627	
08B	TANK FARM SIDE OF ISOLATION FLANGE AT TEST STATION NO. 08					N 32□ 27.979 W 80□ 41.627	
09	BETWEEN HYDRANTS & TANK FARM BRAVO, NEAR FLIGHTLINE SHACK					N 32□ 28.155 W 80□ 43.002	AREA UNDER CONSTRUCTION
10	AT RECTIFIER OFF APRON					N 32□ . W 80□ .	AREA UNDER CONSTRUCTION

11	TEST STATION BEHIND AND LEFT OF BLDG. 1327					N 32□ 28.221 W 80□ 43.082	AREA UNDER CONSTRUCTION
12	EAST SIDE HYDANTS (PANTAGRAPH NO. 3)					N 32□ . W 80□ .	

FROM: **MCAS BEAUFORT, SC**	**INSPECTOR**	**DATE**	**QUARTER ENDING**

TS No.	**LOCATION OR IDENTIFICATION**	**P/S VOLT**	**SHUNT**			**GPS COORDINATES**	**REMARKS***
			MV	**RES**	**MA**		
13	FUEL PIT					N 32□ 28.285 W 80□ 43.155	FOR STRUCTURE CONNECTION: USE EXTENSION ROD TO POKE PIPE IN PIT
14	RED TS BETWEEN HYDRANTS					N 32□□□□□□ □□□□□□. W 80□ 43 .	
15	WEST PANTAGRAPH NO. 5					N 32□ 28.266 W 80□ 43.600	
16	PIG LAUNCHER TEST STATION					N 32□ 28.191 W 80□ 43.686	
17	PIG LAUNCHER TEST STATION					N 32□ 28.189 W 80□ 43688	
18	TEST STATION AT ROAD INTERSECTION					N 32□ 27.986 W 80□ 43.817	
19	TANK FARM CHARLIE PIPE RISER					N 32□ 27.898 W 80□ 42.750	
19 B	FUEL FARM SIDE OF ISOLATION FLANGE AT TEST STATION NO. 19					N 32□ 27.898 W 80□ 42.750	
20	TEST STATION A TANK FARM CHARLIE, TANK 401						USE CENTER WIRES IN THESE TEST STATIONS AS THESE ARE PERMANENT REFERENCE CELLS
21	TEST STATION B TANK FARM CHARLIE, TANK 402						
22	TEST STATION C TANK FARM CHARLIE, TANK 402						
23	TEST STATION D TANK FARM CHARLIE, TANK 401						
24	PROPANE LINES TEST STATION A						
25	PROPANE LINES TEST STATION B						
26	PROPANE LINES TEST STATION C						
27	PROPANE LINES TEST STATION D						

28	PROPANE LINES 3-INCH CARBARATOR LINE AT STACK						
29	PROPANE LINES ½-INCH CARBARATOR LINE AT STACK						

ATTACHMENT J-1502000-14-02
CATHODIC PROTECTION FUEL TRANSFER PIPELINES

See Attachment J-1502000-14-02 listed in MCAS Beaufort BOS Facility Investment Inventory

ATTACHMENT J-1502000-14-03
CATHODIC PROTECTION TANK IDENTIFICATION

See Attachment J-1502000-14-03 listed in MCAS Beaufort BOS Facility Investment Inventory

ATTACHMENT J-1502000-14-04
CATHODIC PROTECTION TEST POINTS

Cathodic Protection Test Points Map available upon request from Contracting Officer upon contract award

ATTACHMENT J-1502000-15
WEIGHT HANDLING EQUIPMENT INVENTORY CRANES

See Attachment J-1502000-15 listed in MCAS Beaufort BOS Facility Investment Inventory

ATTACHMENT J-1502000-15-01
BOAT LIFT MAINTENCE

Boat Lifts – Three
Location Building 569 – Fuel Pier

Monthly:

Visually inspect alignment of cubes for normal appearance- look for separation of rows or damaged cubes.
Visually inspect connector plugs- all adjustment holes (2 per plug) should be in line.
Visually inspect perimeter nylon connecting bolts- all should be visibly tight.
Visually inspect SST mounting bolts for air tanks and reinforcing bars- all should be visibly tight.
Visually inspect SST chain attachment hoops- ensure shackle pins are hand tight.
Visually inspect air pump control boxes to ensure boxes are secure to the floating dock, all hoses are intact and all accessible hose clamps
Check solar panel for damage and cleanliness.

Quarterly:

Scrape oysters off concrete pilings at low tide as far down as possible.
Perform all monthly tasks.

Annually:

Perform all monthly and quarterly tasks.
Scrape marine growth off the dock blocks, air tanks and air hoses.
Ensure perimeter nylon connecting bolts are hand tight.
Check blower motor and assembly
Check battery voltage and amperes
Check all electrical connections are clean and tight.

-The annual cleaning would require removal of the "Dock Blocks" from the water. Require a boat, with coordination from NREAO, and a minimum of two people to perform the cleaning task.

ATTACHMENT J-1502000-15-02
SPILL BOOM MAINENANCE

Location Building 569 – Fuel Pier

ANNUAL SPILL BOOM CLEANING/REPAIR

1. Scrape/remove all marine growth for the entire length of the permanent boom
2. Inspect all hardware, attachments, and anchoring components
3. Repair/replace any components that are loose, damaged or missing
4. Provide a brief write-up or report to NREAO to indicate overall condition of the boom and its components, what was replaced or repaired, etc.

ATTACHMENT J-1502000-16
LIGHTNING ARRESTORS AND GROUNDING DEVICES INVENTORY

See Separate Attachment J-1502000-16

ATTACHMENT J-1502000-17
JET REFUELING FACILITIES AND SYSTEMS INVENTORY

See Attachment J-1502000-17 listed in MCAS Beaufort BOS Facility Investment Inventory

ATTACHMENT J-1502000-17-01
TANK FARMS A, B, AND C JET REFUELING FACILITIES AND SYSTEMS INVENTORY

See Attachment J-1502000-17-01 listed in MCAS Beaufort BOS Facility Investment Inventory

ATTACHMENT J-1502000-18
SWIMMING POOL FACILITIES

See Attachment J-1502000-18 listed in MCAS Beaufort BOS Facility Investment Inventory

ATTACHMENT J-1502000-19
ARRESTING GEAR (E-28 GEAR) INVENTORY

See Attachment J-1502000-19 listed in MCAS Beaufort BOS Facility Investment Inventory

ATTACHMENT J-1502000-20
EMERGENCY GENERATOR INVENTORY

See Attachment J-1502000-20 listed in MCAS Beaufort BOS Facility Investment Inventory

ATTACHMENT J-1502000-21

MISCELLANEOUS HVAC AND REFRIGERATION SYSTEM INVENTORY INFORMATION

MISCELLANEOUS EQUIPMENT AND SYSTEMS. Miscellaneous equipment and systems listed in J-1502000-10-01 or associated with, shall be maintained and repaired in accordance with the recommendations of the manufacturer and the provisions of this contract, including the following:

(1) Ventilating Equipment and Systems. The Contractor shall maintain and repair ventilating equipment consisting of ventilating, exhaust, and utility fans, and those systems associated with the operation of these items of equipment.

(2) Peripheral Systems. The Contractor shall maintain and repair peripheral systems associated with the equipment included in this attachment, including the following:

(a) Pneumatic and electrical/electronic controls shall be maintained and repaired, including air compressors and all related components; air dryers, refrigeration and/or chilled water systems; and timing devices, switches, microprocessors, transformers, relays, sensors, gauges, thermometers, thermostats, subbases, covers, guards, sending units, dampers, wiring, tubing actuators, valves, fittings, piping, regulators, master and submaster controllers, etc., normally associated with the contracted equipment.

(b) All electrical wiring and conduit from the load side of the equipment starter to the equipment to include the equipment starter; the respective electrical drive motor for all equipment with remote magnetic starters, contacts, relays, etc.

(c) All refrigeration and oil systems piping and components thereof.

(3) All insulation of refrigeration and oil piping, chilled water piping, and other piping associated with equipment.

(4) All motors, variable frequency drives, starters, heaters, contacts, relays, fuses, timing devices, switches, transformers, wiring, etc., not specifically included elsewhere in the contract.

(5) Condenser water and chilled water circulating pumps, motors, starters, contacts, relays, switches, fuses, wiring, heaters, base mounts, shafts, couplings, drives, guards, valves, seals, gaskets, rupture discs, pressure gauges, strainers, filters, thermometers, and piping between pumps and equipment, etc.

(6) Chilled water make-up system to include all piping, valves, filters, strainers, chemical injection pots, expansion tanks, and other related components thereof that are downstream from the make-up water regulating valve and/or manual by-pass valves, and to that point where the make- up water enters the chilled water system.

(7) On systems that have a magnetic starter, contact, or relay as an integral part of the unit, the Contractor shall maintain the wiring and conduit in between, up to the load side of the disconnect switch and/or circuit breaker, whichever is nearest to the unit. On systems without magnetic starters, contacts, relays, etc., (such as exhaust fans), the Contractor shall maintain the wiring and conduit in between, up to the load side of the disconnect switch, on/off switch, and/or circuit breaker, whichever is nearest to the unit.

(8) All incidental materials, hardware panels, boxes, brackets, supports, weather stripping, caulking, sealing, flashing, connections, etc., as required.

(9) Any other equipment, systems, components, and parts relative to the maintenance, repair, and operation of equipment not specifically covered elsewhere in this contract, unless specifically excluded.

(10) Vacuum pump units shall be maintained and repaired in accordance with the manufacturer's manuals and procedures and the provisions of this contract.

SUGGESTED PM REQUIREMENTS

THIS IS NOT AN ALL INCLUSIVE LIST, THE CONTRACTOR IS ULTIMATELY RESPONSIBLE TO PERMORM THE PREVENTATIVE MAINTENANCE REQUIRED BY EACH PIECE OF EQUIPMENT COVERED BY THIS CONTRACT

Work included, but not limited to the following general requirements are applicable to and amplify the specific PM requirements:

1. Regular Adjustment: Regular adjustments as may be required for efficient, economical, and safe performance of equipment systems shall be made at the time of each scheduled preventive maintenance.

2. Periodic Cleaning, Sanitation: Routine and scheduled cleaning of work areas and mechanical equipment rooms, systems, drains, drain piping, traps and pans shall be accomplished as a part of the regular scheduled PM inspection and service, or more frequently as may be necessary to maintain a clean and sanitary operating condition.

3. Lubrication, Oil.

   a. Check applicable equipment for excessive bearing temperatures, noise, and inadequate lubrication of bearings and moving parts. Lubricate in accordance with manufacturer's instructions as to type of lubricant/oil and frequency of lubrication. Check oil level and oil quality and change dirty/contaminated oil. Make other adjustments to oil systems as required. Check oil temperatures and pressure.

   b. A laboratory oil analysis shall be conducted annually on all chiller systems with capacities of 100 tons or greater. This test will check for acid, moisture, metals content, and other contaminants in accordance with the particular chiller manufacturer's requirements. The Contractor shall submit the name of the proposed testing laboratory not more than 30 days after the start date of the contract for the CO's approval. Oil samples shall be drawn during the appropriate PM inspection, and copies of test results submitted with the weekly PM completion report.

4. Fire and Safety Hazards: Check for dust, dirt, soot, oil and grease deposits and accumulations, drippings, presence of flammable materials, rags, debris, and any other conditions that may be construed to be a potential fire or safety hazard. Correct or remove from the site all fire and safety hazards.

5. Structures, Casings, Hangers, Supports, Beams, Platforms, Pads, Vibration Absorbers, and Sound Isolators: Check mounting bolts; loose, broken, or missing parts, connections and hardware; improper level of equipment and defective sound cushion isolators and vibration absorbers. Check for dirt, dust, trash, and other debris accumulated on or around the equipment. Check the security of all mounting and attaching points. Check for vibrations and other unusual movements. Clean, adjust, service, repair or replace all items found to be deficient.

6. Coils: Cooling/Heating, Condenser (Water and Refrigerant). Check for obstructions to air flow through all coils. Check for dust, dirt, and foreign materials accumulation, unusual noises and vibrations, and loose, missing or damaged parts. On direct expansion systems check for frosting

or icing of coils; proper operation of expansion valves, capillary tubes and spider distributors; proper operation of automatic temperature controls and defrost timers; and check superheat across evaporator coils. Check all coils for leaks. On water cooling/heating coils check for proper water flow, temperature, and pressures across the coil. Clean and flush the water side of water cooling/heating coils (as applicable) as necessary to correct any deficiencies not allowing for proper operation. Check for damaged, bent or corroded coil tubes or fins on all coils. Clean, adjust, service, repair, or replace items found to be deficient.

7. Condensate Drains, Pans, Piping, Traps: Check condensate drain pans for algae growth and sedimentation, damaged coatings and insulation, rust corrosion, and leaks. Check condensate drainpipes and traps to assure they are open and water flow is not restricted. Clean, adjust, service, repair, or replace items found to be deficient.

8. Piping Water, Refrigerate, Oil, Air: Check for leaks, rust, corrosion, deformation, and material defects of all applicable piping and tubing. Check for piping and tubing vibrations, looseness, and rubbing against objects that can cause damage to the equipment; proper support for the piping and tubing; and vibra-absorbers, expansion joints and rupture discs. Piping, tubing, and fittings being replaced shall be compatible with existing materials. Clean, adjust, service, repair, or replace items found to be deficient.

9. Compressors. Check for dust, dirt, oil and grease deposits and accumulations, leakage of refrigerant and oil, cracked/clear sight glasses and gauges, damaged fittings, piping, valves, etc. Check for loose connections, excessive or unusual noise and vibrations; proper suction and discharge temperature and pressures, and indications of excessive heat. Check oil levels, unloaders for proper operation, and change out dirty/contaminated oil and filters. Check compressor full load and run load amps, compare against manufacturer's data plate rating, and record the findings. Meg the motor windings on all compressor motors 15 H.P. and larger once each year and record the readings. Clean, adjust, service, repair, or replace all items found to be deficient.

10. Water Chillers: Check for dust, dirt, oil and grease deposits and accumulations, leakage of refrigerant and oil, cracked/clear sight glasses and gauges, damaged fittings, piping, valves, etc. Check for loose connections, excessive or unusual noise and vibrations; proper suction and discharge temperature and pressures, and indications of excessive heat. Check oil levels, unloaders for proper operation, and change out dirty/contaminated oil and filters. Check compressor full load and run load amps, compare against manufacturer's data plate rating, and record the findings. Check all electrical wiring and related components. Record the suction and discharge pressures and type and amount of refrigerant and/or oil added to the system, on the log sheet (as applicable) for air conditioning and compressed air plant compressors. Meg the motor windings on all compressor motors 15 H.P. and larger once each year and record the readings. Chillers with cooling towers shall have annual condenser tube brushing. Clean, adjust, service, repair, or replace all items found to be deficient.

11. Refrigerant and Oil Systems: Separators, Driers, Strainers, Filters, Oil Traps. Check for proper operation, refrigerant and oil leaks, and other material defects; check sight glass for clarity, cracks, or moisture. Check refrigerant and oil charges and levels. All systems with changeable core type filters/driers shall be changed as part of the regular PM inspection and service, or more often if required. Clean, adjust, service, repair, or replace all items found to be deficient. The Contractor shall not knowingly vent or otherwise dispose of any refrigerant in a manner, which would permit their release into the environment. Refrigerants shall be captured and recycled in conformance with all applicable federal, state, and local laws and regulations.

12. Pump Units: Check for dust, dirt, and other deposits; leaks; excessive or unusual noise and vibrations; and loose, broken, or missing parts and connections. Check for correct rotation and

prime. Check seals, gaskets, packing, bearings, mounting bases and hardware, couplings, guards, inlet and discharge pressures, and overall operations. Clean, adjust, service, repair, or replace all items found to be deficient.

13. Tanks and Heat Exchanges: Check pressure tanks and other equipment items for damage and deterioration. Blow down or drain air tanks. Check all equipment items for leaks and missing or defective parts. Check pressure relief valves, check valves and regulators for proper operation. Check liquid levels, sight glasses, heat transfer, temperature differentials, and pressures as applicable.

14. Balancing Glycol and Condenser Water Systems: Perform test of chilled and condenser water systems to assure these systems are providing the most efficient and economical operations attainable for that equipment and the facilities which it services. Check balance and rebalance if necessary to meet design specifications. Bleed air from chilled water loops as required to maintain efficient and standard operating conditions. Repair or replace automatic/manual bleed off valves in systems as required for proper operation.

15. Insulation. Check for wet, damaged, missing, and deteriorated insulation and vapor barriers; broken tie wires, loose or missing binding bands, torn canvas jackets, etc. The insulation on all applicable system components shall be repaired or replaced as needed, with insulation materials having a vapor barrier and insulating value equal to or better than original or existing insulation materials. Chilled water piping shall be insulated with Cellular Class, ASTM C 552, Type II, Class 2, with vapor barrier. Insulated surfaces having moisture condensing on the surfaces shall be considered inferior and shall be replaced. Clean, adjust, service, repair, or replace all items found to be deficient.

16. Chilled Water Piping System: Check applicable valves for operation, leakage, linkages, travel, range limitations, rust, dust, dirt, corrosion, scale, seizing, bindings, mounting, clogging, broken, damaged or missing parts, and material defects. Check source of valve operation, i.e., pneumatic, electrical, pneumatic/electric, etc., for required pressures, electrical power voltages, etc. Check accuracy of pressure gages and thermometers. Clean, adjust, service, repair, or replace any parts, materials, components, or combinations thereof found to be deficient as a result of these inspections, to restore valves to a standard operating condition.

17. Replacement and Cleaning of Air Filters: Cleaning of air filters shall include a check for dust, grease, and other deposits and for missing or improperly fitted filters. Replace throw-away type filters and those missing or having improper fit; wash permanent type filters in soap suds or solvents, rinse with hot water, and restore viscous coating in accordance with manufacturer's instructions.

18. Rust and Corrosion: Clean rusted and corroded areas on equipment. Prime the cleaned surfaces and paint using a primer and paint suitable for the particular equipment and material surfaces being painted. Paint colors shall be matched as closely as possible to original or previous colors, or as otherwise approved by the CO. Equipment identification data shall not be obscured or covered up with paint.

19. Motors, Drives, Sheaves, Shafts, Couplings, Blowers, Fans, Hubs, Belts, Bearings, Gearboxes, and Guards: Check for accumulations of dust, dirt, grease, and oil. Clean, adjust, service, repair, or replace items as necessary to correct existing deficiencies such as: worn, loose, missing, or damaged parts, guards, connections, and connectors; bent blades; worn, loose, broken or missing belts; unbalanced moving parts; shaft misalignment; worn or damaged couplings; excessive noises and vibrations; and play of shafts; bad bearings; ineffective isolators; vibration absorbers, etc. Check full load and run load amps of each electric motor, other than fractional H.P. and

compare with manufacturer's data plate ratings. Check condition of motor windings and brushes.

20. Wiring, Electrical Control Circuits, Systems: Check for loose, charred, broken, or damaged wires and insulation; short circuits, loose or weak contact springs; worn or pitted contacts; proper sizing of fuses; defective operation of parts and components; and other deficiencies. All wire splice connections shall be properly insulated. All electrical wiring, circuits, etc., shall be in accordance with the National Electrical Code for the particular application in which used. Clean, adjust, service, repair, or replace items found to be deficient.

21. Chemical Treatment of Chilled Water Systems: The Contractor shall provide an inspection check and subsequent adjustments in chemicals to maintain pH limits of 7.0 to10.0, and nitrite levels of 500 to 1,000 ppm as N02. Inspection checks and any required adjustments shall be made throughout the term of the contract. The Contractor shall maintain detailed records of the results of all inspection checks and chemical treatments to include: building number and system, date chemicals and applied description of chemicals used, quantity of chemicals used per system to maintain standards, chemical level readings in system before and after adjustments, date of inspection check and adjustment, and name of person(s) performing the inspections and/or adjustments. This information shall be provided to the CO in writing within five working days of each inspection check.

22. Air Handler Units, Ducts, Plenums, Grilles, Registers, Diffusers, Screens, Dampers, Vanes, Mixing Boxes, VAV Boxes, Balancing of Air Systems: Check plenum chambers, supply and return air ducts, branch ducts, mixing boxes, VAV boxes, dampers, registers, grilles, diffusers, louvers, and insect and bird screens. Check for dirt, dust and trash; air leaks, broken, ripped or torn insulation and disconnected ducts; loose or broken connections, brackets, hangers, supports, and other parts; excessive vibrations or other movements; defects in metal, fiber glass, and other materials; proper operation of movable parts such as dampers, louvers, and vanes in relation to the controlling device; and inadequate air flow and/or distribution in main and branch duct circuits. Check air handler unit systems for proper operation and correct CFM air flow. Balance air distribution systems to original design specifications for all areas being serviced by the systems. Check air temperatures and static pressures. Check turning vanes, fire dampers, access openings, doors, panels, outside air make-up systems, ducts, and screens. Clean by sweeping, brushing, dusting, vacuuming, washing, hosing with water, detergents, degreasers, solvents, chemicals, air pressure, steam, or other methods as are applicable to the nature of the item being cleaned, and as may be required to obtain desired results. Clean, adjust, service, repair or replace all items found to be deficient.

23. Exhaust Air and Ventilating Systems: Check for dust, dirt, grease, and oil accumulations; air flow and weather and elements integrity; suction pressure at air intake; operation of dampers, baffles, solenoids, protective guards, insect and bird screens; and caulking around flashing, ducts, collectors, smoke pipes, cowlings, hoods, caps, and covers. Clean or replace filters as applicable. Check for clogging, broken, or separated joints and seams in ducts, stacks, couplings, sheaves, belts, fan blades, blowers, etc. Check thermal insulation, protective coverings, vapor barriers, and loose or missing fasteners and hardware. Check for material defects and improper operation of moveable parts and components in relation to the controlling device. Check for loose, missing, or poor fitting flashing, fire and safety hazards, warning alarms, etc. Clean, adjust, service, repair, or replace all items found to be deficient.

24. HVAC Controls: Check for improper settings, defective operation, calibration and cleanliness, proper control voltages, and pneumatic air operating pressures. Check for deficiencies in wiring, tubing, piping, switches, relays, coils, solenoids, transformers, controls, sensors, thermostats and protective covers and guards, ambientstats, acquastats, pressure switches, reversing relays, timing devices, master and sub-master controllers, outdoor authority override controllers, etc.

Clean, adjust, service, repair, or replace items found to be deficient.

25. Freeze Protection: The Contractor shall shut down, secure, and drain all equipment subject to freeze damage when freezing weather conditions are forecast, anticipated or imminent. The Contractor is responsible for and liable to provide such services weather or not specifically informed or notified by the CO or others, of such conditions. All equipment secured and drained for these reasons shall be returned to normal service as soon as possible when danger of freeze conditions has passed. The Contractor shall be liable for correction of any and all damages incurred as a result of failure to adequately protect equipment under these conditions. NOTE: Dry fluid coolers will not be drained. Pumps will be operated during excessively cold periods.

26. Cooling Towers: Check for external scale; leaks; defective valves and float assemblies; and deterioration and improper positioning of slats, baffles, and eliminators used to control water spray and/or distribution. See Appendix M for treatment of cooling tower water. Check for structural damage, rust, and corrosion. Check condition and operation of gearboxes (gear reducers), fans, blades and hubs, motors, drives, shafts, couplings, guards, bearings, etc. Check cooling tower water level, water make-up, drains, valves, overflow, and bleed-off. Clean, adjust, service, repair or replace all items found to be deficient. The Contractor shall be responsible for cleaning the cooling towers on an annual basis. The cleaning shall include:

a. Sanitization by maintaining 50 parts per million chlorine for 24 hours.

b. Use of detergent cleaner.

c. Physical flushing of sediment from the basins.

d. Check for leaks in closed cell towers.

BUILDINGS WITH CONTIUOUS AIR CONDITIONING OPERATION ALL YEAR

BLDG. 599	TELEPHONE OFFICE
BLDG. 600	OLD CONTROL TOWER
BLDG. 729	AIRCRAFT HANGAR
BLDG. 1049	OPERATIONAL TRAINER
BLDG. 1078	OPERATIONAL TRAINER (TACTS)
BLDG. 1166	CONTROL TOWER
BLDG. 1215	ADMIN. OFFICE AT 418 HANGAR
BLDG. 2145	PILOT TRAINING CENTER
BLDG. 2146	F-35 HANGER

LIST OF SPECIALIZED BLDGS

BLDG. 598	MEDICAL/DENTAL
BLDG. 599	TELEPHONE OFFICE
BLDG. 894	CHILD DEVELOPMENT CENTER
BLDG. 1049	OPERATIONAL TRAINER
BLDG. 1078	OPERATIONAL TRAINER
BLDG. 1142	CHILD DEVELOPMENT CENTER
BLDG. 1166	CONTROL TOWER
BLDG. 2145	PILOT TRAINING CENTER
BLDG. 2146	F-35 HANGER

ATTACHMENT J-1502000-21
MISCELLANEOUS HVAC AND REFRIGERATION SYSTEM INVENTORY INFORMATION

18 AIR HANDLERS THAT REQUIRE MONTHLY FILTER CHANGES		
BUILDING	**DESCRIPTION**	**AIR HANDLER**
2080	ENLISTED DINING	4-MAU
BEQ	PHASE 4	6-ERU
408	GYM	2-ERU
553	AFTERBURNERS	2-ERU
554	O-CLUB	1-MAU
564	MCCS	1-MAU
596	TRAINING	1-MAU
598	MED/DENTAL	1-AHU
601	HQ	2-MAU
658	ROICC	1-ERU
727	SQUAD ADMIN	2-MAU
1108	TLF	3-OAU
1142	AS CDC	1-OAU
1253	VAN PAD	1-MAU
1256	CORROSION CONTROL	3-OAU
1632	LB CDC	1-AHU
2085	FIRE STATION	1-ERU
1260	ARMORY	1-ERU

ATTACHMENT J-1502000-21
MISCELLANEOUS HVAC AND REFRIGERATION SYSTEM INVENTORY INFORMATION

WATER SOURCE AND GROUND SOURCE HEAT PUMP SYSTEMS				
BUILDING NUMBER	BUILDING NUMBER	BUILDING NUMBER	BUILDING NUMBER	BUILDING NUMBER
405	585	660	843	2085
408	594	662	1039	2089
414	596	703	1078	2090
553	597	707	1108	2091
564	600	727	1244	3032
565	601	780	1245	
566	612	790	1246	
584	614	807	1247	

ATTACHMENT J-1502000-21-01
HVAC AND REFRIGERATION SYSTEMS INVENTORY

See Attachment J-1502000-21-01 listed in MCAS Beaufort BOS Facility Investment Inventory

ATTACHMENT J-1502000-21-01-01
BUILDING 1121 – ROOM VENT CLEANING

Perform bi-monthly Preventive Maintenance Inspections and replacement as required for the 197 room vent filters in Building 1121.

*Utilize a vent filter material approved by the Public Works Maintenance Control office.

ATTACHMENT J-1502000-21-02
TEMPERATURE STANDARDS

Area	Cooling Season*	Heating Season*
Living & Admin. Areas (Inactive Employment)	78	68
Working Areas (Active Employment)	78	68
Storage Areas	78	40
Computer Areas	70	68
Training Areas	75	68

*Degrees F. dry bulb

REFRIGERATION SYSTEMS	
Type	Degrees F.
Frozen Meat	0 to -5
Fresh Meat	30 to 34
Ice Storage	28 to 30
Dairy Products	32 to 34
Ice Cream	0 to -5
Beer	35 to 39
Fruits and Vegetables	36 to 42
Chill Room	35 to 39

Headquarters Marine Corps (HQMC)
Installation & Logistics (I&L) Department
Marine Corps Installations Command,
Facilities Directorate (GF)

Guidance for
Temperature and Humidity Settings

Version 1.0
12 March 2015

Table of Contents

1 Introduction 2
2 Thermal Comfort - Establishing Temperature and Humidity Occupied Settings and Unoccupied Setbacks 2
2.1 Occupied Temperature and Humidity Space Set Points 2
2.2 Unoccupied Temperature and Humidity Setbacks 2
2.3 Example Energy and Cost Savings 3
2.4 Ventilation 4
2.5 Routine Re-Assessment 4
3 Seasonal Transition Plan 4
4 Exemption Spaces 6
4.1 Requesting Additional Exemptions -Waiver Request Process 6
4.2 Data Centers 7
Appendix A. References A-7
Appendix B. Thermal Comfort Calculations B-1
Appendix C. Sample Seasonal Transition Plan C-2

Appendix D. Exemption Waiver Request – Template 3

Table of Figures & Tables

Table 1 – Temperature and Humidity Space Set Points (Occupied Mode) 2
Table 2 – Unoccupied Mode: Temperature and Humidity Settings 3
Table 3 – Data Center Inlet Temperature & Humidity Settings* 7
Table B-1 – Thermal Comfort Assumptions for Temperature and Humidity Settings[1].....B-1

1 Introduction

Published in 2013, the Marine Corps Installations Command (MCICOM) Installations Energy Strategy presents key strategies required to improve United States Marine Corps (USMC) mission readiness. The strategy establishes energy information as a line of operation (LoO) for achieving the energy mission of Marine Corps installations. One objective of the energy information LoO is to establish common requirements for the functions and capabilities of all installation-level energy information systems. This document is one of a series to focus on Industrial Control System (ICS) based functions and capabilities and its relation to the energy information LoO. For other ICS based strategies see the following Headquarters Marine Corps (HQMC) Facilities Directorate (GF) Guidance:

- ICS Based Energy Management Strategies Guidance
- ICS Based Commissioning Guidance

This document describes actions, methods, and goals that will lead to lower energy consumption and enable the establishment of temperature and humidity settings (by means of building control systems and/or thermostat settings) that comply with the Code of Federal Regulations (CFR), Unified Facilities Criteria (UFC) 3-410-01, and American Society of Heating, Refrigeration, and Air-Conditioning Engineers (ASHRAE) Standard 55-2013 Thermal Environmental Conditions for Human Occupancy. Where any conflicts exist between sections of any mechanical UFC or applicable codes or laws and this guidance, the most restrictive requirement will govern. By using this guidance, installations will ensure that a standards based approach is used to create a comfortable working environment while saving energy and supporting utility cost savings. This guidance discusses best practices for:

- Thermal comfort during occupancy and non-occupancy time periods
- Seasonal Transitional Planning (heating to cooling; cooling to heating)
- Space exemptions for mission and safety requirements and other case-by case exceptions

The USMC is making efforts to drive down installation utility consumption via the Utility Demand Reduction (UDR) Guidance, the Energy Ethos campaign, and the Unit Energy Manager (UEM) Program. These efforts bring energy conservation down to the unit level and ask for behavior change in every Marine. UEMs should understand the basic premises for the approaches set forth in this document so that target temperatures and humidity levels can be communicated to all Marines and incorporated into program materials. This will help ensure accountability in the continuing shift toward an energy efficient culture in the USMC.

2 Thermal Comfort - Establishing Temperature and Humidity Occupied Settings and Unoccupied Setbacks

Establishing a single temperature and humidity setting for all facility types, hours of operation, and occupancy levels may appear to be an easily employed energy management strategy, but in reality this approach is an oversimplified solution that increases strain on systems, decreases comfort level for the occupants, and negatively impacts energy and cost savings. 41 CFR § 102-74 requires that Federal agencies maintain temperatures to maximize customer satisfaction by conforming to local commercial equivalent temperature levels and operating practices. Those practices are satisfied by complying with Unified Facilities Criteria (UFC) 3-410-01 Heating Ventilation and Air Conditioning Systems and UFC 1-200-02 High Performance and Sustainable Building Requirements that state that a minimum ASHRAE Standard 55 must be met.

Thermal comfort is complex and dependent upon individual perceptions. Simply adjusting the thermostat to achieve comfort is probably not enough to keep occupants comfortable while using energy efficiently. HVAC loads and factors such as building orientation, geographic location, lighting, and occupancy all impact thermal comfort. There are multiple factors that influence what is considered "comfortable" temperature and humidity conditions by ASHRAE Standard 55 which organizes these factors into six (6) different components:

(1) Metabolic Rate (activity rate)
(2) Clothing Insulation

(3) Radiant Temperature (hot or cold surfaces)
(4) Air Temperature
(5) Air Speed (Air Velocity)
(6) Humidity

The temperature and humidity conditions presented in ASHRAE Standard 55 are intended to provide a minimum of 80% occupant acceptability.

In accordance with the references outlined in Section 1, the goal of this document is to identify temperature and humidity set points that maximize occupant comfort, health, safety and productivity while also minimizing energy consumption per the Marine Corps Installations Energy Strategy. Installations are encouraged to use their energy management and control systems (EMCS) to establish settings for occupancy and non-occupancy hours in conjunction with HVAC systems to assist in reducing energy consumption and maintaining comfort with little manual oversight.

The guidelines outlined in Section 2 and 3 apply to all spaces unless noted in the exemptions list provided and explained in detail in Section 4.

2.1 Occupied Temperature and Humidity Space Set Points

This section addresses temperature and humidity settings to be used when a space is occupied. In order to provide a comfortable working and living environment for all personnel, the cooling and heating set points identified in UFC 3-410-01 and 10 CFR 436 were utilized to meet current energy reduction goals and satisfy space conditioning requirements. During the cooling months, HQMC encourages installations to consider a more relaxed dress code while maintaining professionalism to ensure optimal comfort for the occupants and to maximize savings. For reference, Table 1 provides a summary of the comfort conditioning heating and cooling set points identified and applicable to many common facility occupancy types. See Section 4, Exemption Spaces, for specialty occupancy types where different set points may apply.

Table 1 – Temperature and Humidity Space Set Points (Occupied Mode)

	Set Point	ICS Differential*	Reference
Cooling	**78°F** (26ºC) dry bulb	(±2°F)	UFC 3-410-01
	55°F (12.8ºC) – Max dew point		UFC 3-410-01
Heating	**65°F** (20ºC) dry bulb	(± 2°F)	UFC 3-410-01
Relative Humidity**	Not to exceed 65%		10 CFR 436, Appendix C

*The set points defined in Table 1 are the ultimate goal. In some instances where calibration or building control system settings require a deviation to most efficiently maintain the set point, a ±2°F may be applied.

** Where indoor relative humidity is expected to fall below 20% for extended periods, humidification must be added to increase indoor relative humidity to 30%.

HVAC airflow should be maintained all year round but may be adjusted according to space-specific HVAC loads and occupancy schedules.

2.2 Unoccupied Temperature and Humidity Setbacks

This section addresses temperature and humidity settings to be used when a space is unoccupied (off-hours, weekends, and holidays). A good practice in determining when a building is considered "unoccupied" is to establish a schedule based on the operation hours of the space and/or facility.

With the goal of conserving energy, setback controls allow a greater range of indoor temperature conditions during unoccupied periods. During unoccupied mode, the indoor conditions must be maintained within the safe temperature and humidity limits of building components and/or materials contained within the building.

Setback control can be completed at the building level or at the zone-level (in multi-zoned facilities) if a portion of the facility operates 24 hours a day but other areas of the facility are unoccupied during off-hours, weekends, and/or holidays. While temporary lodging and barracks are technically occupied 24 hours a day, nighttime setbacks as stated in Table 2 should still be applied, where applicable.

For reference, Table 2 provides a summary of the unoccupied heating and cooling set points identified in UFC 3-410-01 (1 July 2013) and ASHRAE 90.1-2013.

Table 2 – Unoccupied Mode: Temperature and Humidity Settings

Unoccupied Mode *		Setbacks	Reference
Cooling	**Minimum Temperature Above the Occupied Set Point**	5°F**	ASHRAE 90.1
	Maximum Dew Point	55°F (12.8ºC)	UFC 3-410-01
Heating	**Maximum Temperature**	55°F (12.8ºC)	UFC 3-410-01
	Minimum Temperature Below the Occupied Set Point	10°F **	ASHRAE 90.1
	Minimum Relative Humidity	20% ***	UFC 3-410-01

*The Unoccupied Mode Setbacks identified in Table 2 are applicable to many common facility occupancy types. Reference Section 4 for specialty occupancy type temperature set point requirements.

** During unoccupied times, the ultimate goal is to allow the building temperature to drift with the only constraint being the safe temperature of building components or other material contained within the building. The minimal heating temperature setback must be sufficient to prevent pipes from freezing.

*** Where indoor relative humidity is expected to fall below 20% for extended periods, humidification must be added to increase indoor relative humidity to 30%.

In short-term unoccupied buildings (i.e., nighttime and weekends), use "optimal start/stop," discussed in "USMC ICS Based Energy Management Strategy Guidance" to ensure the building is reheated or cooled in time for occupancy.

If a control system cannot use optimal start/stop, consider shut downs/setbacks half an hour to an hour before the end of operational hours.

For humidity control during extended unoccupied periods, consider localized dehumidifiers when their operation is more economical than running the entire building system.

2.3 Example Energy and Cost Savings

USMC wide utility spending for FY2014 was just over $200 million. An estimated $80M of that total is associated with the expense of cooling and heating. Even a 1% savings to this bill frees up $800,000 for other O&M programs. The instance below provides a practical example of how appropriate daytime set points and nighttime setbacks can save upwards of 20% in heating and cooling expenses.

Extensive research by the Department of Energy (DOE) has shown that setting the thermostat to 65°F during occupancy periods and setting it back 10° to 15° for at least 8 hours during unoccupied periods can save 5% to 15% on the heating bill. While savings will vary by building due to factors such as building envelope condition and outdoor temperature (savings is actually increased for buildings in milder climates compared to those in more severe climates), a good rule of thumb estimates approximately 1% savings for each degree of setback per eight hour period. In the summer the same strategy applies to air conditioning.

To put this in terms of numbers:

Assumptions:

- Hours of Operations are 0700 -1800, Monday through Friday. Therefore, the heating is assumed to be set at 65°from about 0600 to 1800 to ensure thermal comfort.
    - Daytime heating set point at 65°F for 12 hours
    - Evening and weekend setback at 55°F for 12 hours
- Building type: Typical office building, well insulated, 15,000SF
- Annual heating bill was $10,000 keeping the temperature at 68°F during the heating months
- 1% savings for each 1 degree setback per eight hour period

Daytime Savings: 68°F versus 65°F: 3°F temperature difference for a 12 hour period = 4.5% savings or $450 savings

Evening setback savings 68°F versus 55°F: 13°F temperature difference for a 12 hour period = 19.5% savings or $1950 savings
Total annual savings = $2400 for just one of hundreds of facilities on an installation
The same practices may be applied to housing. By turning a home thermostat back 10° to 15° for 8 hours, housing utility bills can be reduced by 5% to 15% a year for the heating and/or cooling portion of the bill.
Note: A common misconception associated with thermostat settings is that a furnace works harder than normal to warm the space back to a comfortable temperature after the thermostat has been set back, resulting in little or no savings. In fact, once a facility (and/or a home) drops below its normal temperature, it will lose energy to the surrounding environment more slowly. The lower the interior temperature, the slower the heat loss, the more energy and dollars are saved. The same concept applies to raising the thermostat setting in the summer -- a higher interior temperature will slow the flow of heat into the conditioned space, saving energy on air conditioning. However, when a heating or cooling system uses multiple mechanisms to adjust room temperature, finding the optimal set back becomes more complicated and must be addressed on an individual basis. For example, a heat pump may use electric resistance heating for emergency or auxiliary heat. That emergency heat will be activated if the room temperature falls significantly lower that the thermostat setting unless the thermostat and heat pump is specifically designed to avoid use of emergency/auxiliary heat for setback operation. The electric resistance emergency heat costs significantly more than the heat produced by the heat pump. Optimal dollar savings are realized by minimizing use of emergency/auxiliary heat for setbacks in this case.

2.4 Ventilation

41 CFR § 102-74 requires that Federal agencies provide ventilation in accordance with ASHRAE Standard 62, Ventilation for Acceptable Indoor Air Quality where physically practical. UFC 3-401-10 additionally requires that facilities be ventilated in accordance with ASHRAE 62.1-2010. ASHRAE 62.1 provides guidance for determining the required outside airflow to individual spaces. The calculations for ventilation requirements are completed for each room generally on the basis of room floor area and the room occupancy. The required outside air for each Air Handling Unit (AHU) is then calculated based on the total outside airflow required for each room served by that AHU and a credit is provided for spaces with extra/unused outside airflow.
Ventilation is often over designed and spaces are often over ventilated, resulting in a waste of energy and money. Wherever possible, demand control ventilation (DCV) should be utilized. For more instruction on DCV, see Headquarters Marine Corps (HQMC) Facilities Directorate (GF) ICS Based Energy Management Strategies Guidance.

2.5 Routine Re-Assessment

This section identifies best practices when re-assessing temperature and humidity. The guidance below can be integrated into the seasonal transition plan or performed separately.

- Once the occupancy schedule and occupied and unoccupied temperature settings are applied, at a minimum an annual re-assessment should be scheduled to verify the hours of operation, occupancy level, facility usage, system zoning, and other facility-specific factors. This re-assessment ensures that settings remain applicable to the spaces in questions and that necessary adjustments are made.
- If a space or facility undergoes energy conservation measures or renovation (e.g., building envelope upgrades, HVAC or lighting retrofit), then the temperature set point(s) and/or occupancy schedule may need to be re-assessed.
- Survey both existing thermostat set points and building space temperatures. Do not assume the thermostats are calibrated. Check, adjust, calibrate and repair controls such as thermostats, controllers, and valve and damper operators.
- Check and note control system/thermostat/sensor location and look for obvious damage. Initiate proper documents for repair/replacement if necessary.
- Surveying high occupancy and high energy facilities on a seasonal basis may also help in adjusting the settings and identifying energy conservation measures that can reduce energy usage and increase thermal comfort. For example, there may be drafts or radiant heat coming from a poorly insulated opening or from equipment.
- Section 3, Seasonal Transition Sample Plan, provides best practices on seasonal preventative maintenance.

3 Seasonal Transition Plan

This section formally establishes Marine Corps guidelines for transitioning from the heating season to the cooling season and vice versa. This plan:

- Defines the targeted beginning dates and ending dates for the heating and cooling seasons.
- Establishes target temperature range standards for the heating and cooling seasons.
- Provides a prioritized schedule, by building category, for seasonal activation of heating and cooling systems.
- States the HVAC preventive, predictive, and corrective maintenance and repair actions required to meet the planned transition schedule.
- Identifies and schedules repair activities identified during preventative maintenance and inspection of HVAC equipment.
- Ensures that procedures are in effect to properly notify and communicate with all customers prior to each transition period.

Simultaneous heating and cooling of a building is not energy efficient and is typically only provided where precise temperature and humidity control is necessary, such as in laboratories or medical facilities. Many large HVAC systems are "two-pipe" systems that only provide heating or cooling from central hot and chilled water systems and therefore cannot be readily switched from summer to winter or winter to summer operation. These heating and cooling transition include significant resources and costs. Seasonal transition of HVAC systems can take several days to accomplish. In contrast to residential HVAC systems that many are accustomed to, installation HVAC contains potentially thousands of systems. A typical residential system simultaneously controls both heating and cooling with the flip of a switch during any season. Although residential systems provide more flexibility in temperature control, commercial systems historically provide higher efficiency and a lower operating cost over the life of the system and HVAC equipment selection is based purely on design capability and economics at the time of construction. Because of the constraints of most installation HVAC systems, a heating and cooling season must be established in order to efficiently and economically provide cooling during the hot season and heating during the cold season.

Due to the variability of seasonal weather conditions, several days of un-seasonably warm or cold weather may occur during the seasonal transition period with a return to normal weather patterns, resulting in uncomfortable indoor conditions. While several un-seasonable hot or cool days can be experienced during these transition periods, building occupants are encouraged to dress appropriately and use open windows or other methods to reduce discomfort during these periods. During transition periods, facility managers and/or Unit Energy Managers are encouraged to communicate seasonal changeover plans with building occupants and if approved by their supervisors, building occupants may be encouraged to telework or adjust dress code.

In order to maintain comfortable working and living conditions within all facilities, long-range weather predictions should be used along with current weather trends to establish seasonal change-over of HVAC equipment. A period of no heating or cooling may occur between each transition period. The length of this period depends on weather conditions and command requirements.

Cooling Transition Requirements

As a general rule for those installations with cooling and heating transitions, a transition to cooling will begin when the outside daily high air temperature is 85°F or higher for five (5) consecutive days and the forecast predicts continued daily high temperatures greater than 85°F during the cooling transition period, unless the command decides to delay the availability of air conditioning due to fiscal considerations. However, the decision to initiate the cooling season falls on the judgment of installation personnel based on long-range weather forecasts and the characteristics of the specific heating and cooling equipment on the installation. This decision should balance the elements of energy efficiency and indoor comfort. A typical cooling period for CONUS begins in early May and ends in September or October but varies depending on the specific geographical location and climate. In general, cooling will be turned off when temperatures remain below 85°F for five (5) consecutive days near the end of the cooling season.

Transitional Seasons

During transitional periods—for example, autumn, spring or unforeseeable spells of warmth in the winter months when neither heating nor cooling systems are being used—utilize windows and doors to increase comfort and ventilation. Coordination with the Unit Energy Manager (UEM) is required to ensure alternative measures do not interfere with the building management system.

Heating Transition Requirements

As a general rule for those installations with cooling and heating transitions, a transition to heating will begin when the outside daily low air temperature is 64°F or lower for five (5) consecutive days and the forecast predicts continued temperatures of 64°F or lower, unless the command decides to delay the availability of heat due to fiscal considerations. However, the decision to initiate the heating season falls on the judgment of installation personnel based on long-range weather forecasts and the characteristics of the specific heating and cooling equipment on the installation. This decision should balance the elements of energy efficiency and indoor comfort. A typical heating season for CONUS begins in mid-October and ends in March, but will vary by each geographical location. In general, heat will be turned off when temperatures remain above 65°F for five (5) consecutive days near the end of the heating season.

Seasonal Transition by Building Group Priority

Once the decision to initiate or cease heating or cooling operations has been made, Facilities Maintenance will begin turning heating and cooling systems off or on at facilities that require seasonal changeover. A priority list may be created in order to better manage the transition. Below is an *example* of how facilities may be broken into three priority categories. Where a priority list is applicable, each installation may customize and detail out the list based on their specific mission critical needs, safety, and other factors. Priority 1 facilities are the first facilities addressed, Priority 3 facilities are the last. *NOTE: Ventilation equipment will remain operational.*

- Priority 1: Billeting, mess halls, schools, childcare centers and training facilities.
- Priority 2: Administration facilities.
- Priority 3: All remaining facilities.

Preparation for Cooling and Heating Season Transition

To avoid any delay in the transition period due to maintenance or repair, a transition plan inclusive of preventative maintenance is encouraged, if applicable to the specific facilities in question. This plan will help to begin the transition process well in advance of the actual switch. Appendix C provides a sample transition plan that may be customized to the installation's specific needs.

Customer Notification

To allow occupants sufficient time to prepare, the Facilities Maintenance Division will notify all building occupants two weeks prior to the scheduled transition. This notice will be coordinated with the Assistant Chief of Staff (AC/S) G-4 Installation and Logistics / Commanding Officer / Equivalent. In addition, the FMD shops should generate daily heating and cooling updates by building and provide to the FMD, Customers Service Section so that their staff can accurately inform customer callers the exact status of their particular building, including an estimated target date for start-up.

4 Exemption Spaces

Reference the Indoor Design Conditions in UFC 3-410-01 for temperature set points of specialty occupancy types that differ from temperature and humidity set points identified in Section 2.

Exempt spaces are excused from seasonal transition and occupied temperatures set forth in Sections 2 and 3 due to the inherent nature of the space's function or the mission critical nature of the space use. Exempted spaces include:

- Medical and Dental Facilities
- Laboratories
- Historic facilities, Archives, Museums, and Libraries
- Paraloft buildings
- Data Centers – See Section 4.2 for data center specific guidance

4.1 Requesting Additional Exemptions -Waiver Request Process

The list above may not cover every situation, as each installation is unique in its mission. If a space is not listed in the exemptions list but requires different temperature and humidity settings due to mission requirements or for compliance with ASHRAE Standard 55, a waiver request shall be submitted for exemption consideration. A sample template of the waiver and approval requirements can be found in Appendix D.

As noted in Section 2, thermal comfort takes into account six (6) factors. Assumptions have been made for the expected activity rate, clothing insulation, air temperature, radiant temperature, air speed, and humidity based on the type of space. Once these factors were set, temperature and humidity settings for occupied and unoccupied times

were set to the standards found in Section 2 and within compliance of ASHRAE Standard 55. These assumptions can be found in Appendix B. If these assumptions are not accurate to a specific situation, use one of the three approved methodologies, explained in Appendix B, to determine settings that are within compliance. The ASHRAE 55 Standard and a thermal comfort calculation tool such as the CBE ASHRAE Thermal Comfort Tool (http://smap.cbe.berkeley.edu/comforttool) are useful references.
Note: If an exempt space is only a portion of a facility that space shall be isolated to the extent possible in order to allow it to operate under exempted conditions while the remaining spaces of the facility abide by the standard regulations. Only in cases where isolation of the exempt space is not possible will consideration be taken for exemption of the entire facility.

4.2 Data Centers

The ASHRAE TC9.9 committee has developed a recommended thermal operating envelope for data centers. Table 3 below illustrates the recommended settings based on equipment class types and demonstrates the recommended conditions for inlet air entering the data communications equipment. A more detailed explanation and the most recent setting values can be found on the TC9.9 Committee website: http://tc99.ashraetcs.org/documents.html or the ASHRAE TC9.9 "Data Center Networking Equipment- Issues and Best Practices" http://tc99.ashraetcs.org/documents/ASHRAE%20Networking%20Thermal%20Guidelines.pdf.
Data Center temperature humidity should be based on the recommended manufacturer's maximum temperature and humidity rate *or* the ASHRAE Thermal Guidelines for Data Processing Environments, 3rd edition, ASHRAE, 2012, 150 pp (whichever is more stringent).

Table 3 – Data Center Inlet Temperature & Humidity Settings*

	Setting
Minimum Recommended Temperature	64.4°F (18°C)
Maximum Recommended Temperature	80.6°F (27°C)
Minimum Recommended Moisture (Humidity)	Dew Point of 42°F (5.5°C)
Maximum Recommended Moisture (Humidity)	To 60% Relative Humidity and 65°F (15°C) Dew Point

* Unless an installation's equipment falls out of the guidance above, the values in Table 3 (or most recent ASHRAE TC9.9 Committee recommendations, whichever is more recent) should be followed.

Appendix A. References

Facility Set Points

(A) 41 CFR § 102-74 – Facility Management

(B) Unified Facilities Criteria (UFC) 3-410-01 Heating Ventilating, and Air Conditioning Systems, 1 July 2013

(C) American Society of Heating, Refrigeration, and Air-Conditioning Engineers (ASHRAE) Standard 55-2013: Thermal Environmental Conditions for Human Occupancy

(D) Unified Facilities Criteria (UFC) 1-200-02 High Performance and Sustainable Building Requirements, Change 2, 1 August 2014

(E) 10 CFR Part 436, Appendix C to Part 436 - General Operations Energy Conservation Measures

(F) American Society of Heating, Refrigeration, and Air-Conditioning Engineers (ASHRAE) Standard 62.1-2010: Ventilation for Acceptable Indoor Air Quality

(G) American Society of Heating, Refrigeration, and Air-Conditioning Engineers (ASHRAE) Standard 90.1-2013: Energy Standard for Buildings Except Low-Rise Residential Buildings

(H) ASHRAE Thermal Guidelines for Data Processing Environments, 3rd edition, ASHRAE, 2012, 150pp, http://tc99.ashraetcs.org/documents.html

(I) ASHRAE TC9.9 Committee, http://tc99.ashraetcs.org

Appendix B. Thermal Comfort Calculations

The goal of thermal comfort is to apply HVAC settings that maintain the comfort, health, safety, and productivity of occupants while minimizing energy use. Using the energy management control system to establish settings for occupancy and non-occupancy hours for HVAC will assist in reducing energy and maintaining comfort with little manual oversight. Temperature and humidity settings for conditioned spaces are identified in Section 2 and comply with ASHRAE Standard 55. To determine these settings and to ensure ASHRAE 55 compliance, assumptions for the expected mean radiant temperature, clothing level, activity rate, and air velocity have been made based on the type of space. Based on space functionality and typical facility conditions, Table B-1 provides an overview of the assumed values of the metabolic rate, clothing level, radiant temperature, and air velocity by space type used to calculate the ASHRAE 55 compliant temperature and humidity settings.

Table B-4 – Thermal Comfort Assumptions for Temperature and Humidity Settings[1]

Space Type	Space Description	Typical Metabolic Rate (Met)[2]	Clothing Level (Clo)[3]	Air Speed (fpm)[4]	Radiant Temperature
Living Quarters	Barracks, dorms, TLF where activity is seating or light activity by day and at rest in the evening	Daytime: 1.2 Evening: 1.0	Varies: 0.6 (short sleeves, long pants) to 1.0 (long sleeves and long pants) to >1.0 depending on work atmosphere and season	30 or less	Heating: >68°F Cooling: <85°F
Admin.	Offices, warehouse, etc., where personnel work seated or in standing position involving little or no exercise	1.0		40	
Child Care Centers	Child development centers, schools, and similar facilities where there is a mix of seating, walking, and light exercise	2.0			
Special Process Rooms (i.e., Data Centers)	Special process rooms such as paint shops, drying rooms, data centers, areas housing electronic archives, etc.	1.0			
Workshops/ Hangars Type A	Zones for high to moderate physical activity—Examples include maintenance shops, hangars, warehouses, gyms, and buildings where employees work in a standing position or exercise moderately (such as sorting or light packing). (Activity level or metabolic rate > 3 met)	1.2			
Workshops/ Hangars Type B	Shops, warehouses and the like, where employees do work involving considerable exercise, such as foundries, heavy packing, crating, and stacking, or where heat is required to protect material or installed equipment from freezing	3.2			

Notes

[1] Values in Table B-1 are derived from ASHRAE Standard 55 recommendations.

[2] Metabolic Rate (measured in "met") takes into consideration the activity done in the space. 0.6 = at rest/relaxing; 1.0 = seating; 2.0 is walking or light physical activity, etc.

[3] Clothing level (measured in "clo") is assumed to vary slightly by the season – and personnel are expected to dress appropriately for the facility type, work, and weather. 0.6 is typical summer work summer attire (short sleeves, long pants); 1.0 is typical winter time attire (long sleeves and pants)

[4] Air Temperature (measured in fpm): 40 fpm = barely noticeable and is common in most spaces. This may increase in locations with higher metabolic rate to increase comfort.

If the assumptions provided in Table B-1 are not in line with the actual conditions of the specific facility in question, use one of three approved methods by ASHRAE to determine the temperature and/or humidity setting for the special case and submit the exemption form provided in Appendix D. ASHRAE 55 permits three different compliant methods to determine thermal comfort:

- Computer Model Method
- Graphic Comfort Zone Method

• Adaptive Method -- Optional Method for Determining Acceptable Thermal Conditions in Naturally Conditioned Spaces.

The Computer Model Method is described in Section 5.3.2 of the Standard and is the recommended alternative compliance method due to its wide range of applicability, ease of use, traceability, and accuracy. The CBE ASHRAE Thermal Comfort Tool (http://smap.cbe.berkeley.edu/comforttool) is authorized within ASHRAE 55 and therefore should be used to determine thermal comfort compliance under this method. This method applies to spaces where the occupants have activity levels that result in average metabolic rates between 1.0 and 2.0 met and where clothing is worn that provides 1.5 clo or less of thermal insulation.

The Graphic Comfort Zone Method uses the ASHRAE Standard 55 Psychrometric Chart and is described in Section 5.3.1 of the Standard. Use of this method is limited to representative occupants with metabolic rates between 1.0 and 1.3 met and clothing insulation between 0.5 and 1.0 clo in spaces with air speeds less than 0.2 m/s (40 fpm). Because this method has a narrower scope of applicability, provides less traceability, and is more prone to user error than the Computer Model Method, the Graphic Comfort Zone Method should be used with caution and only as specified in the Standard.

The Adaptive Method is for specific cases of naturally conditioned spaces and is detailed in Section 5.4 of the Standard. The conditions required for thermal comfort in spaces that are naturally conditioned are not necessarily the same as those conditions required for other indoor spaces. Field experiments have shown that in naturally conditioned spaces, where occupants have control of operable windows, the subjective notion of comfort is different because of different thermal experiences, availability of control, and resulting shifts in occupant expectations. Section 5.4 specifies criteria required for a space to be considered naturally conditioned. The methods of Section 5.4 may, as an option, be applied to spaces that meet these criteria. The methods of Section 5.4 may not be applied to other spaces.

Appendix C. Sample Seasonal Transition Plan

The Seasonal Transition Plan presented below is a sample. Use is optional, and if used, it will require customization for the installation in question. Brackets [ ] are used within this sample to indicate areas that must be completed by the preparer for the installation in question. Remove brackets once information is inserted. This sample plan assumes central plants. Verbiage not applicable should be removed.

I. PREPARATION FOR COOLING SEASON

The Facilities Maintenance Division (FMD) heating, ventilation and air conditioning (HVAC) shop begins pre-seasonal maintenance on cooling systems starting on February 1st -through system start-up. Required preventive maintenance (PM) includes servicing chillers, pumps, air handling units (AHUs), and cooling towers.

A. COOLING SEASON

A firm date for turning on air-conditioning/chiller systems is not established; rather, real-time temperatures along with the long-range weather forecast are used to determine a start-up date. Normally the cooling season is [XXX – XX] through [XXX- XX] (e.g., May 1st – Oct 15th)

B. PREVENTIVE MAINTENANCE (PM)

Complete all chillers, cooling towers, pumps, condensing units, and AHUs pre-seasonal maintenance prior to the start of the cooling season.

1. HVAC Cooling Equipment – Complete the preventive maintenance checklist for each type of equipment as follows:

Chillers – Perform inspections and maintenance according to each PM checklist as identified in **USMC$_{MAX}$** (Maximo). Identify and complete required repairs. As a minimum, remove the end bells and inspect and clean tubes.

Split Ductless System – The condensing unit for a split ductless system is mounted on the exterior of the building, and the evaporator (cooling section) and fan are located indoors. Most of these units operate year round and require no specific cooling season PM. Check units on a quarterly basis and [clean/replace] filters as needed.

Cooling Towers – Clean the cooling towers prior to performing any PM. Perform inspections and maintenance in accordance with each PM checklist as identified in **USMC$_{MAX}$**. As a minimum, clean the cooling towers at least once during the cooling season, and again at the end of the season after they are drained and treated with biocide. Cooling towers should not be filled until [date of first day of cooling season] (or later if hard freeze is forecast). Make repairs as soon as possible in accordance with the Performance Work Statements (PWS) requirements using either in-house or contract workers, depending upon resource availability and extent of repairs or replacements required.

AHU – The AHUs condition and supply ventilating and conditioning airflow to occupied spaces. Heat sources may be steam, hot water, electric, or natural gas. Cooling is provided by either refrigerant (DX) or chilled water coils.

AHUs require monthly PM. Perform inspections and maintenance in accordance with each PM checklist as identified in **USMCMAX**. Due to the large number of AHUs, accomplish PM throughout the year as weather permits. The Customer Service Section of FMD schedules this work and notifies customers when shut downs of AHUs are to take place. AHUs may need to be shut down in order to accomplish PM work properly.

C. HOT WATER CONVERSION

Prior to the Heating Plant steam shutdown, the Mechanical Shop activates each building's stand-alone electric or gas hot water system. The Building Automation System (BAS) administrator and/or HVAC Equipment Mechanic shuts down all heating programs and starts up all cooling system programs and temperature settings – at which time the Mechanical Shop personnel perform an on-site inspection of each building's cooling system to confirm proper start-up as appropriate.

D. COOLING TEMPERATURE STANDARD

Based on USMC Guidance for Temperature and Humidity Settings Version 1.0, 15 September 2014, the following target and acceptable temperature ranges have been set. If the space temperature is within this range, the space is considered to be adequately cooled/ and no action will be taken.

Cooling: 78°F (+/- 2°)

Use energy saving measures for facilities on the installations to help meet the installations' energy conservation efforts. Apply temperature setbacks to classroom buildings and general administrative spaces during weekdays by means of [Optimal Start/Stop ICS settings] / [manually setback and turned back within approximately 1 hour of operation hours] / [from approximately [10:00] PM] until [6:00 AM] based on utility loads and also on weekends starting Friday night at [10:00 PM] until Monday morning at approximately [6:00 AM]]. FMD determines setbacks temperatures that permit the building to cool down enough from a long hot weekend and set accordingly. Exceptions to these measures can be allowed for unusual or special events such as conferences, special training events, or staff working on weekends. The special event host should notify FMD Customer Service prior to the event so that automatic system schedules can be manually overridden temporarily.

II. <u>PREPARATION FOR HEATING SEASON</u>

The Mechanical Shop performs PM from [June 1st] until system activation. This includes servicing all heat exchangers, heating hot water pumps, domestic hot water pumps, heat exchangers, and condensate receivers/pumps. [The Central Heat Plant starts producing steam on or about [place date 15 days prior to start of steam, if applicable] and brings the [steam distribution mains] up to temperature on [main side of the installation followed by less critical areas]. [All steam lines are planned to be activated by [heating date]. The Mechanical Shop works in conjunction with the Heat Plant to bring all buildings on-line in accordance with Standing Job Order (SJO)/PWS.

A. HEATING SEASON

A firm date for start-up of the industrial facility stand-alone boiler systems is not established; rather, real-time temperatures along with the long-range weather forecast are used to determine a start-up date. Preventive and corrective maintenance is completed between [June 1st] and until system activation. The Facilities Department's BAS administrator checks each building's program and temperature set points for both heat and hot water.

B. PREVENTIVE MAINTENANCE (PM)

The Mechanical Shop, in conjunction with the Heating Plant staff, tests, activates, and switches to installation-wide [steam/central heating system] heated building hot water heaters after which each internal building hot water system is shut down. [Check all heating pumps, exchangers, condensate receivers, steam traps, heating valves, and PRVs for operation; service and repair as needed - prior to the start of the heating season]. **USMCMAX** provides the heating start-up/PM schedule.

C. HOT WATER CONVERSION

After visual inspection of each boiler, all electric and gas hot water systems are shut down. Convert all buildings to the [steam/central] system [if applicable] to provide domestic hot water.

D. PREVENTIVE MAINTENANCE SCHEDULE

The SJO provides the consolidated start-up and shutdown schedule.

E. HEATING TEMPERATURE STANDARD

Based on USMC Guidance for Temperature and Humidity Settings Version 1.0, 15 September 2014, the following target and acceptable temperature ranges have been set. If the space temperature is within this range, the space is considered to be adequately heated and no action will be taken.

Heating: 68°F (+/- 2°)

Use energy saving measures for facilities on the installations to help meet the installations' energy conservation efforts. Apply temperature setbacks to classroom buildings, general administrative spaces, and all other capable facilities weekdays by means of [Optimal Start/Stop ICS settings] / [manually setback and turned back within

approximately 1 hour of operation hours] / [from approximately [10:00] PM] until [6:00 AM] based on utility loads and also on weekends starting Friday night at [10:00 PM] until Monday morning at about [6:00 AM]]. FMD determine setbacks temperatures that permit the building to cool down enough from a long hot weekend and set accordingly.

Exceptions to these measures can be allowed for unusual or special events such as conferences, special training events, or staff working on weekends. The special event host should notify FMD Customer Service prior to the event so that automatic system schedules can be manually overridden temporally.

F. PERSONAL HEATING EQUIPMENT

Supplemental electric space heaters are prohibited (except in those cases where this is the only source of heat available) in accordance with Depot Order 4101.2C because of their energy inefficiency and safety risks.

III. CUSTOMER NOTIFICATION

To allow occupants sufficient time to prepare, the FMD notifies all building occupants two weeks prior to the scheduled transition. This notice will be coordinated with the [Assistant Chief of Staff (AC/S) G-4 Installation and Logistics / Commanding Officer / Equivalent]. In addition, the FMD "shops" should generate daily heating and cooling updates by building and provide to the FMD, Customers Service Section so that their staff can accurately inform customer callers the exact status of their particular building – including an estimated "target" date for start-up.

Appendix D. Exemption Waiver Request – Template

WAIVER REQUEST FOR TEMPERATURE AND HUMIDITY EXEMPTION

Installation	
Facility / Portion of Facility	
Tenant Unit / Individual	
Requestor Name, Position	
Requestor Email, Phone Number	
Date of Request	
Waiver Request Specifications	
If Requesting Temperature Exemption: • Include the new proposed temperature • Explain, in detail, why a temperature exemption is being requested • Outline any special circumstances or personnel involved with this request	**Proposed Temperature and Reasons:**
If Requesting Humidity Exemption: • Include the new proposed humidity • Explain, in detail, why a humidity exemption is being requested • Outline any special circumstances or personnel involved with this request	**Proposed Humidity and Reasons:**
Proposed Duration of Exemption (not to exceed 1 year)	**Duration:**
Have Other Remedial Actions Been Assessed, Requested, or Carried Out? (e.g., update HVAC system to control humidity)	**Explain Any Remedial Actions or Requests:**

Routing and Signatures

Position	Name	Signature	Approve/Deny	Date
Requestor				
Energy Manager				
PWO/I&L Equivalent				

ATTACHMENTJ-1502000-21-03
Air Quality Inspections

Air Quality Inspections:

The contractor will conduct and fully document two (2) facility air quality inspections annually for each building on Marine Corps Air Station (MCAS) Beaufort. The inspection is designed to assist Public Works in identifying and investigating issues that have or may lead to indoor air quality issues.

1. Conduct a visual inspection of all indoor square footage a minimum of two (2) times per year to include the billeting ,work, storage, mechanical and maintenance areas.

    a. Initial inspections will be scheduled in order of base concerns and or priorities.
    b. Inspections will be scheduled approximately six (6) months apart.
    c. Areas will be identified according to the MCAS Facility Listing, description and building number.
    d. Date/time, temperature and humidity will be recorded for each area.

2. Problem areas showing signs of fungal growth, contaminants or other conditions favorable to fungal growth will be scheduled for more frequent visits at no additional cost. Problem areas are defined as:

    a. Visual signs of fungal growth.
    b. Water damaged areas.
    c. Abnormally high humidity.

3. Weekly reports will be provided to summarize inspection results and observations for each area inspected. Areas with possible issues will include additional detail of conditions and recommendations and or remediation protocols.

    a. Reports will be submitted with the required weekly reports.
    b. Reports will include humidity and temperature readings.
    c. Expanded reports for areas of concern.
    d. Pictures will be provided as needed or as requested.

4. Cleaning, sampling, testing, and or remediation recommendations will be included at no additional cost to the Government.

ATTACHMENTJ-1502000-21-04
Daily HVAC report

See attachment Excel file J-1502000-21-04

ATTACHMENT J-1502000-22
RESERVED
(Formerly Fire Protection. Covered under N4008524D0048)

ATTACHMENT J-1502000-23
VERTICAL TRANSPORTAION EQUIPMENT (VTE) INVENTORY

See Attachment J-1502000-23 listed in MCAS Beaufort BOS Facility Investment Inventory

ATTACHMENT J-1502000-23-01
VERTICAL TRANSPORTAION EQUIPMENT (VTE) AUTO LIFT INVENTORY

See Attachment J-1502000-23-01 listed in MCAS Beaufort BOS Facility Investment Inventory

ATTACHMENT-J-1502000-24
HISTORICAL SERVICE ORDER DATA

See Attachment J-1502000-24 listed in MCAS Beaufort BOS Facility Investment Inventory

ATTACHMENT J-1502000-25
BACKFLOW PREVENTION DEVICES INVENTORY

See Attachment J-1502000-25 listed in MCAS Beaufort BOS Facility Investment Inventory

ATTACHMENT J-1502000-26
EXTERIOR LIGHTING INVENTORY AND LOCATIONS

See Attachment J-1502000-26 listed in MCAS Beaufort BOS Facility Investment Inventory

ATTACHMENT J-1502000-27
GREASE TRAP INVENTORY

See Attachment J-1502000-27 listed in MCAS Beaufort BOS Facility Investment Inventory

ATTACHMENT J-1502000-28
AIRFIELD LIGHTING MAINTENANCE INFORMATION

See Attachment J-1502000-28 listed in MCAS Beaufort BOS Facility Investment Inventory

ATTACHMENT J-1502000-28-01
AIRFIELD LIGHTING INVENTORY

See Attachment J-1502000-28-01 listed in MCAS Beaufort BOS Facility Investment Inventory

ATTACHMENT J-1502000-28-02
WARRANTY INFORMATON FOR NEW LIGHTING
See Attachment J-1502000-28-02 listed in MCAS Beaufort BOS Facility Investment Inventory

The Maintenance Contractor should be aware of the warranty information below in regards to the new lighting. The Maintenance Contractor shall only supply labor for lighting replacement. The lighting material shall be supplied by the Contractor who installed the new system unless the failure is due to any of the acts listed below in the warranty.

Warranty:
The contractor (Installing contractor) shall assist the government in warranty administration during the warranty period. The contractor is responsible for a 10 year warranty on material. After 10 years it is the responsibility of the government. The warranty on the airfield lighting fixtures and equipment does not cover damage due to acts of god (i.e. - lightning strikes, etc.). Damage due to excessive heat and/or vibration generated by the aircraft at MCAS Beaufort, SC is also excluded from the warranty coverage. In the event that there is a high number of fixtures failing in the vicinity of the VL Pads or Simulated LHD Deck (all locations where the vertical landing craft land on high temperature concrete), this needs to be brought to the attention of the Contractor. All airfield lighting fixtures on this project will be numbered so they can be tracked. If the Government removes a fixture installed under this contract they will keep it so that the Contractor and/or manufacturer are able to conduct an examination of the cause of failure.

ATTACHMENT J-1502000-28-03

Tower Lighting Controller – TWR Lighting Inc.
Model# LC-STAR – 120V
Serial # 0372151003

ATTACHMENT J-1502000-29
400 HZ CONVERTERS INVENTORY

See Attachment J-1502000-29 listed in MCAS Beaufort BOS Facility Investment Inventory

ATTACHMENT J-1502000-30
MARINE CORPS AIR STATION STORAGE TANKS FUEL

See Attachment J-1502000-30 listed in MCAS Beaufort BOS Facility Investment Inventory

ATTACHMENT J-1502000-30-01
MARINE CORPS AIR STATION STORAGE TANKS OIL

See Attachment J-1502000-30-01 listed in MCAS Beaufort BOS Facility Investment Inventory

ATTACHMENT J-1502000-30-02
MARINE CORPS AIR STATION STORAGE TANKS USED OIL

See Attachment J-1502000-30-02 listed in MCAS Beaufort BOS Facility Investment Inventory

ATTACHMENT J-1502000-30-03
MARINE CORPS AIR STATION STORAGE TANKS AFFF

See Attachment J-1502000-30-03 listed in MCAS Beaufort BOS Facility Investment Inventory

ATTACHMENT J-1502000-30-04
MARINE CORPS AIR STATION STORAGE TANKS LPG

See Attachment J-1502000-30-04 listed in MCAS Beaufort BOS Facility Investment Inventory

ATTACHMENT J-1502000-30-05
MARINE CORPS AIR STATION STORAGE TANKS EG

See Attachment J-1502000-30-05 listed in MCAS Beaufort BOS Facility Investment Inventory

J-1502000-31
FORMS

ATTACHMENT J-1502000-31-01
STANDBY FUEL USAGE REPORT

See Standby Fuel Usage Report Below:

ATTACHMENT J-1502000-31-01
STANDBY FUEL USAGE REPORT

To be provided weekly to the FSCM. Cumulative usage for the month shall be calculated weekly.

DATE	BOQ LEVEL (No. 2 Fuel)		
5/1/00	44”	ON HAND	44”
5/15/00	44”	RECEIVED	
6/1/00	44”	TOTAL	
		ON HAND	44”
		USAGE	0
DATE	**O’CLUB LEVEL (#2 Fuel)**		
5/1/00	1328	ON HAND	1328
5/15/00	1328	RECEIVED	
6/1/00	1328	TOTAL	
		ON HAND	1328
		USAGE	0
DATE	**STAFF BARRACKS LEVEL (#2 Fuel)**		
5/1/00	4924	ON HAND	4924
5/15/00	4757	RECEIVED	0
6/1/00	4600	TOTAL	4924
		ON HAND	4600
		USAGE	324
DATE	**PARALOFT LEVEL (#2 Fuel)**		
5/1/00	2473	ON HAND	2473
5/15/00	2473	RECEIVED	0
6/1/00	2473	TOTAL	2473
		ON HAND	2058
		USAGE	415

DATE	CENTRAL HEAT PLANT (Propane)		
		ON HAND	GALLONS
		RECEIVED	GALLONS
		TOTAL	GALLONS
		ON HAND	GALLONS
		USAGE	GALLONS

ATTACHMENT J-1502000-31-02
FUEL TANK READINGS

To provided <u>weekly</u> to the Central Heating Plant Supervisor for incorporation into the Standby Fuel Usage Report.

DATE:				
OFFICER'S CLUB		GALLONS		%LEVEL
BOQ		GALLONS		%LEVEL
STAFF NCO		GALLONS		%LEVEL
PARALOFT		GALLONS		%LEVEL
CENTRAL HEAT PLANT TANK A		GALLONS		%LEVEL
CENTRAL HEAT PLANT TANK B		GALLONS		%LEVEL
CENTRAL HEAT PLANT TANK C		GALLONS		%LEVEL

ATTACHMENT J-1502000-31-03
SPCC INSPECTION FORMS

See SPCC Inspection Forms Below:

ATTACHMENT J-1502000-31-03
SPCC INSPECTION FORMS

SPCC INSPECTION FORMS
Table A7-2 Monthly Tank Inspections Record Check List

Monthly AST Inspection Checklist **Month/Year:** _____

	Tank #									
	Bldg/Location									
	Contents									
	Capacity (gal)									
I.	Check tanks for:									
A.	Drip marks									
B.	Discoloration of tanks									
C.	Puddles containing spilled or leaked material									
D.	Corrosion									
E.	Cracks									
F.	Localized dead vegetation									
G.	Liquid level sensors working properly									
H.	Leaks on intersistial monitoring for double-walled tanks									
II.	Check tank foundation/supports for:									
A.	Cracks									
B.	Discoloration									
D.	Settling									
E.	Gaps between tank and foundation									
III.	Check piping for:									
A.	Droplets of stored material									
B.	Discoloration									
C.	Corrosion									
D.	Bowing of pipe between supports									
F.	Localized dead vegetation									
G.	Aboveground valves and appurtances working properly and show no signs of leakage									
H.	Flange joints, expansion joints, valve glands and bodies, catch pans and metal surfaces are all in good condition									
IV.	Check Secondary Containment for:									
A.	Signs of leaks, spills, or puddles of stored material									
B.	Accumulated stormwater									
C.	Check accumulated stormwater for sheen									
D.	Cracks and/or permeability									
E.	Damage caused by vegetation									
F.	Debris or material that could clog inlets or drainage									
G.	Discoloration									
H.	Drain valve(s) in closed position									

Comments and Corrective Actions:

Inspector:_____* **Signature:**_____ **Date:**_____

*My signature certifies that I have examined the containment facility, notified NREAO if an oil sheen or free product was present, removed any visible oil from the water or pumped and treated the containment water, repaired or reported any leaks and closed and locked the containment drain valve, if applicable prior to my departure.

** My signature certifies that I have examined the containment facility, notified NREAO if an oil sheen or free product was present, removed any visible oil from the water or pumped and treated the contaminated water, repaired or reported any leaks and closed and locked the containment drain valve, if applicable prior to my departure.*

ATTACHMENT J-1502000-31-04
Tank Overfill
OVERFILL PROTECTION SYSTEM CHECKLIST

INSTRUCTIONS: Each time a storage tank overfill protection system is tested, enter the results in the appropriated columns below. This form can be used for several tests.

FACILITY_____COGNIZANT CODE _____

DATE	TANK NUMBER OR LOCATION	TEST PROCEDURE USED	TEST RESULTS	SYSTEM PASS/FAIL

ATTACHMENT J-1502000-31-05

Tank Integrity Test

INSTRUCTIONS: This record is to be used whenever a tank integrity test is performed on an oil storage tank. Complete a copy of this record for each test of each tank.

DATE_____INSPECTOR_____TANK NUMBER _____

LOCATION_____TANK CONTENTS _____

Type of test performed: _____

_____

Results of test: _____

_____

Remarks: _____

_____

_____

_____

_____

_____

ATTACHMENT J-1502000-31-06

Tank Visual Inspection

INSTRUCTION: Complete a copy of this record whenever a storage tank is emptied for any purpose or at the intervals specified in M0-230, Table 10, whichever comes first.

DATE_____INSPECTOR_____TANK NUMBER _____

LOCATION_____TANK CONTENTS _____

Type of visual inspection (manhole or physical entry)

_____

Condition of internal coatings.

_____

_____

_____

_____

_____

_____

Condition of welds, seams and tank bottom.

_____

_____

_____

_____

_____

_____

Condition of internal surfaces.

_____

_____

Remarks: _____

ATTACHMENT J-1502000-31-07

Transfer Pipeline Biweekly Check

INSTRUCTIONS: Complete this record for each biweekly (every other week) inspection of aboveground piping systems. Place an X in the appropriated box for each item. If any response requires elaboration, do so in the Description and Comment space provided. This form is also to be used during inspections of exposed sections of underground piping.

DATE_____INSPECTOR _____

LOCATION_____CONTENTS _____

Further descriptions and comments should be attached on a separate sheet of paper.

	YES	NO	DESCRIPTIONS AND COMMENTS
Valve seals and gaskets are leaking.	☐	☐	
Valve seals and gaskets are deteriorated.	☐	☐	
Relief valves, expansion joints, or pipe fittings are leaking or damaged.	☐	☐	
Aboveground pipes are leaking.	☐	☐	
Pipes are misaligned.	☐	☐	
Pipe supports are structurally weak, damaged, or deteriorated.	☐	☐	
Pipeline contacts are worn.	☐	☐	
Pipelines and valves are not labeled or marked	☐	☐	
External coatings are chipped, cracked, or pealing	☐	☐	
Pipelines are corroded or rusted.	☐	☐	
Cathodic protection lead wires are broken, or deteriorated.	☐	☐	
Pipelines are mechanically damaged.	☐	☐	
Pipelines and valve labels are not legible.	☐	☐	
Pipeline right-of-ways show signs of leaks or pipe damage.	☐	☐	

Remarks:

ATTACHMENT J-1502000-31-08

Transfer Pipeline Annual

INSTRUCTIONS: Complete this record for each annual inspection of aboveground piping systems. Place an X in the appropriate box for each item. If any response requires elaboration, do so in the descriptions and Comments space provided.

DATE_____INSPECTOR _____

LOCATION_____CONTENTS _____

Further descriptions and comments should be attached on a separate sheet of paper.

	YES	NO	DESCRIPTIONS AND COMMENTS
Relief valves fail pressure test.	☐	☐	
Relief valves require calibration.	☐	☐	
Valves do not open and close properly.	☐	☐	
Valve actuators are inoperable.	☐	☐	
Slug shutoff valves are non-functional.	☐	☐	
Flame arrestors are clogged or damaged.	☐	☐	
Pipeline metal thickness is outside acceptable limits.	☐	☐	
Anode in Cathodic protection system is consumed.	☐	☐	
Cathodic protection is adequate as determined through soil potential measurements. (0.85 volts potential is considered adequate)	☐	☐	

Remarks: _____

_____

ATTACHMENT J-1502000-31-09

Pipeline Pressure Test

INSTRUCTIONS: Complete a copy of this record for each annual pipeline pressure test preformed.

DATE_____INSPECTOR _____

Pipeline Location _____

Pipeline Contents _____

Section Tested _____

Normal Working Pressure

_____

Test Pressure (1.5 x working pressure)

_____

Time Test Started _____

Time Test Ended _____

Pressure When Released

_____

Remarks: _____

_____

_____

ATTACHMENT J-1502000-31-10

Facilities Monthly Inspection

INSTRUCTIONS: Complete this record for each monthly inspection. Place an X in the appropriate box for each item. If any response requires elaboration, do so in the Descriptions and Comments space provided.

DATE_____INSPECTOR _____

LOCATION _____

Further descriptions and comments should be attached on a separate sheet of paper.

	YES	NO	DESCRIPTIONS AND COMMENTS
Hoses show signs of internal deterioration (cuts, tears, blisters, etc.)	☐	☐	
Electrical grounds, clamps or connections are loose or corroded.	☐	☐	
Bounding connections are loose or corroded.	☐	☐	
Grounding connections are loose or corroded.	☐	☐	
Bolted connections are loose.	☐	☐	
Clamps on portable equipment are loose or deteriorated.	☐	☐	
Early warning departure systems are inoperable.	☐	☐	
Spill containment structures have holes, cracks, or leaks.	☐	☐	
Sealing compound in conduit is cracked or deteriorated.	☐	☐	
Valves and valve operators are non- functional.	☐	☐	
Strainer covers leak or show signs of deterioration.	☐	☐	
Pump packing leak or show signs of deterioration.	☐	☐	
Leakage is present around valve steams.	☐	☐	
Valve packing material is worn or deterioration.	☐	☐	
Valve bonnet or flange bolts are loose.	☐	☐	
Valve body walls are thin, pitted, or crack.	☐	☐	
Valve seats are not snug when valve is closed.	☐	☐	

Remarks: _____

ATTACHMENT J-1502000-31-11

Facility Annual Inspection

INSTRUCTIONS: Complete this record for each annual inspection. Place an X in the appropriated box for each item. If any response requires elaboration, do so in the Description and Comments space provided.

DATE_____INSPECTOR _____

LOCATION _____

Further descriptions and comments should be attached on a separate sheet of paper.

	YES	NO	DESCRIPTIONS AND COMMENTS
Remote operating equipment is inoperable.	☐	☐	
Resistance of grounding systems is outside acceptable limits (05 ohms).	☐	☐	
Resistance of bounding systems is outside acceptable limits (05 ohms).	☐	☐	
Indicating equipment does not perform satisfactorily under normal operating conditions.	☐	☐	
Hoses leak or fail pressure tests.	☐	☐	
Hoses are cracked, cut, worn or deteriorated	☐	☐	
Hoses fail pressure test.	☐	☐	
Pressure gauges are inaccurate (read more than 10 percent of the actual pressure.	☐	☐	
Vapor emission and control systems show signs of leakage or deterioration.	☐	☐	
Vapor emission and control systems do not operate within acceptable limits.	☐	☐	

Remarks:

ATTACHMENT J-1502000-31-12

Spill Containment and Drainage System

INSTRUCTIONS: Complete this record for each <u>weekly inspection</u>. Place an X in the appropriate box for each item. If any response requires elaboration, do so in the Descriptions and Comments space provided.

DATE_____INSPECTOR _____

LOCATION _____

Further descriptions and comments should be attached on a separate sheet of paper.

	YES	NO	DESCRIPTIONS AND COMMENTS
Containment area has accumulated water.	☐	☐	
Ramps or other structures associated with spill control are damaged or cracked.	☐	☐	
Dikes have holes, cracks, vegetative growth or other breaches that could result in leaks.	☐	☐	
Curbing has holes, cracks or other breaches that could result in leaks.	☐	☐	
Swales and structures are clogged or have accumulated debris.	☐	☐	
Spill response equipment is not available or in working order.	☐	☐	
Personnel protective equipment is not available for use during emergencies.	☐	☐	
Communications equipment is inoperable.	☐	☐	

Remarks: _____

ATTACHMENT J-1502000-31-13
Secondary Containment Drainage
SPCC INSPECTION FORMS
Table A7-3
Weekly Secondary Containment Inspection Record- Checklist

Table A7-3 Weekly Secondary Containment Inspection Record- Checklist					
FACILITY:		**DATE:**			
TANK/ SET:		***INPSECTOR:**			
DIKE/BERM SYSTEM (Check box of any deficiency)		SECONDARY CONTAINMENT (Check box of any deficiency)		RETENTION& DRAINAGE PONDS (Check box of any deficiency)	
• Level of precipitation		• Cracks		• Erosion	
• Available capacity		• Discoloration		• Available capacity	
• Permeability		• Puddles of material		• Puddles of material	
• Debris		• Corrosion		• Debris between supports	
• Permeability of earthen floor		• Valve conditions		• Stressed vegetation	
• Location/status of pipes/inlets/drainage					
COMMENTS:					

** My signature certifies that I have examined the containment facility, notified NREAO if an oil sheen or free product was present, removed any visible oil from the water or pumped and treated the contaminated water, repaired or reported any leaks and closed and locked the containment drain valve, if applicable prior to my departure.*

ATTACHMENT J-1502000-31-14
OIL/WATER LEVEL INSPECTION REPORT (MONTHLY)

Monthly OWS Level Inspection Report												
OWS Location:												
Year:	Manway 1			Manway 2			Manway 3			Manway 4		
Month	Oil Level inches	Water Level inches	Sludge Level inches	Oil Level inches	Water Level inches	Sludge Level inches	Oil Level inches	Water Level inches	Sludge Level inches	Oil Level inches	Water Level inches	Sludge Level inches
January												
February												
March												
April												
May												
June												
July												
August												
September												
October												
November												
December												

J-1502000-31-15

Quarterly Storm Water Best Management Practices Check List

MCAS Beaufort-Storm Water Best Management Practices AS-SWPPP-BMP-Checklists-2011-BMP-Sites

Date:	**Area:**			
Name:				
	Yes	**No**	**N/A**	**Comments**
Good Housekeeping				
A. Operation and Maintenance				
1. Is loose garbage and waste material picked up and disposed of regularly?	☐	☐	☐	
2. Is equipment kept in good working condition?	☐	☐	☐	
3. Is equipment routinely inspected for leaks or conditions that could lead to contact with storm water?	☐	☐	☐	
4. Are spill cleanup procedures understood and practiced by employees?	☐	☐	☐	
B. Material Storage Practices	☐	☐	☐	
1. Is space adequate for material transfer and easy access for inspections?	☐	☐	☐	
2. Are containers, drums, and bags stored away from direct traffic routes to prevent accidents?	☐	☐	☐	
3. Are containers stacked according to manufacturer's instructions on pallets and above ground level to avoid corrosion due to moisture buildup?	☐	☐	☐	
Preventative Maintenance				
A. Equipment Identification				
1. Is a system in place to identify equipment that upon failure could result in a leak or spill of potential pollutants that could enter the storm drainage system?	☐	☐	☐	
2. Has any equipment failed during the last reporting period? If so, what was the effectiveness of the storm water pollution prevention measures?	☐	☐	☐	
3. Is there an oil/water separator?	☐	☐	☐	
B. Preventative Maintenance Inspections				
1a. Are there regularly scheduled inspections of equipment that could result in leaks/spills that could enter the storm water stream?	☐	☐	☐	
1b. Review records and note any deficiencies	☐	☐	☐	
2a. Are there timely inspections and maintenance of storm water management devices (cleaning catch basin, etc.)?	☐	☐	☐	
2b. Note any maintenance required	☐	☐	☐	
Note: Equipment that should be inspected includes pipes, storage tank/bins, process/material handling equipment, run-off management devices, etc.				
C. Equipment Repair and Maintenance				
1a. Is a program in place to repair or replace defective equipment	☐	☐	☐	
1b. Note equipment replaced during the last reporting period	☐	☐	☐	

	Yes	No	N/A	Comments
1a. Are inspections and corrective action items documented?	☐	☐	☐	
1b. Review records and note any deficiencies.	☐	☐	☐	
Visual Inspection				
A. Area Inspections				
1. Is the area absent of:	☐	☐	☐	
a. Corroded drums of drums without plugs or covers?	☐	☐	☐	
b. Corroded or damaged tanks, tank supports and tank drain valves?	☐	☐	☐	
c. Torn bags or bags exposed to rain water?	☐	☐	☐	
d. Corroded or leaking pipes?	☐	☐	☐	
e. Leaking or improperly closed	☐	☐	☐	
f. Leaking pumps and/or hose connections	☐	☐	☐	
g. Broken and cracked dikes, walls or other physical barriers designed to prevent storm water from reaching stored material?	☐	☐	☐	
h. Windblown dry chemicals?	☐	☐	☐	
i. Improperly maintained or overloaded dry chemical conveying systems?	☐	☐	☐	
B. Inspection Plan				
1a. Is a regular visual inspection plan properly implemented?	☐	☐	☐	
1b. Review records and note deficiencies.	☐	☐	☐	
C. Records of Inspections				
1a. Are inspections and corrective action items documented?	☐	☐	☐	
1b. Review records and note any deficiencies	☐	☐	☐	
Fueling				
A. 1.a is spill/overflow prevention equipment installed, maintained and operating properly at fuel delivery areas?	☐	☐	☐	
1b. Was there a spill in the area during the last reporting period? If so, what was the effectiveness of the storm water pollution prevention measure(s)	☐	☐	☐	
2. Are fuel areas contained to prevent spills from directly entering the storm or sanitary stream?	☐	☐	☐	
3. Are portable fuel tanks stored properly?	☐	☐	☐	
B. Provide a copy of the topping off procedures once annually	☐	☐	☐	
C. Are fueling area protected from rain and run-on?	☐	☐	☐	
D. 1a. Are dry cleanup methods used for fuel spill	☐	☐	☐	
1b. Have they been used during the last quarter?	☐	☐	☐	
2. Is cleaning the fueling area with water avoided?	☐	☐	☐	
E. 1. Are spill control awareness signs visible around oil/water separators and oil/grease traps??	☐	☐	☐	

		Yes	No	N/A	Comments
	2b. Any used during the quarter?	☐	☐	☐	
	F. 1. Are employees aware of ways to reduce contamination of storm water?	☐	☐	☐	
	2. Are pollution prevention measures discussed with employees?	☐	☐	☐	
☐	**Vehicle, Aircraft, and Equipment Maintenance**	☐	☐	☐	
	A. 1. Are vehicles, aircraft and equipment checked for leaking fluid?	☐	☐	☐	
	2. Note any evidence of leaks noted from the last reporting quarter.	☐	☐	☐	
	B. Are nontoxic or low toxicity materials used?	☐	☐	☐	
	C.1. Are oil filters complexly drained before recycling/disposal?	☐	☐	☐	
	2. Observe one change and note deficiencies in procedure.	☐	☐	☐	
	D.1. Is the practice of pouring liquid wastes down drains avoided?	☐	☐	☐	
	2. Inspect drains and note observations.	☐	☐	☐	
	E.1. Are engine fluids and batteries recycled?	☐	☐	☐	
	2. Review documentation and note deficiencies.	☐	☐	☐	
	F. Are wastes properly segregated, labeled and discarded?	☐	☐	☐	
	G. Are recycled products used?	☐	☐	☐	
	H. Are Maintenance activities performed in covered areas?	☐	☐	☐	
	I. Are wrecked vehicles and aircraft stored properly?	☐	☐	☐	
☐	**Painting Operations**				
	A.1. Are painting activities performed within designated areas?	☐	☐	☐	
	2. Does the designated paint area prevent overspray and the contact of by-products with storm	☐	☐	☐	
	a.i. Inspect outside areas.	☐	☐	☐	
	a.ii. Note any evidence of leaks or spills of materials (darkened spots on pavement burned vegetation in swales and ditches)	☐	☐	☐	
	b.i. Inspect roof areas	☐	☐	☐	
	b.ii. Not any evidence of paint fallout from paint booth exhausts.	☐	☐	☐	
	B. Are parts inspected prior to being painted to ensure that they are dry, clean, and rust free?	☐	☐	☐	
	C. Are wastes from sanding contained?	☐	☐	☐	
	D. Is paint waste isolated from contact with storm water contact?	☐	☐	☐	
	E. With regards to waste paint and solvents are proper interim storage procedures being followed?	☐	☐	☐	
	F. 1. Are paint, paint thinner, and solvents recycled?	☐	☐	☐	
	2. Are recycled products used?	☐	☐	☐	
	G. Are wastes separated hazardous/nonhazardous, chlorinated/non-chlorinated, etc.?	☐	☐	☐	

		Yes	No	N/A	Comments
☐	**Vehicles, Aircraft, and Equipment Washing**				
	A.1. If detergents are used are they phosphate-free bio-degradable detergents?	☐	☐	☐	
	2. List applicable MILSPEC or NAVAIR directive/instruction for detergent.	☐	☐	☐	
	B.1. Is outside washing done in a designated area?	☐	☐	☐	
	2. Is wash water contained and kept out of the storm drainage system?	☐	☐	☐	
	C.1. Are water minimization practices implemented?	☐	☐	☐	
	D.1. Have sediment traps been inspected and cleaned in the last quarter?	☐	☐	☐	
	2. When was the trap last inspected?	☐	☐	☐	
	3. Provide copy of the last inspection report.	☐	☐	☐	
	4. Provide date when sediment was last removed and estimate quantity removed	☐	☐	☐	
☐	**Loading and Unloading Materials**				
	A. Are tank trucks/material delivery vehicles parked where spills/leaks can be contained?	☐	☐	☐	
	B. Are loading/unloading equipment checked regularly for leaks?	☐	☐	☐	
	a.i. Inspect paved areas.	☐	☐	☐	
	a.ii. Not any evidence of leaks or spills of materials.	☐	☐	☐	
	b.i. Check maintenance logs.	☐	☐	☐	
	b.ii. Not any deficiencies in maintenance of equipment.	☐	☐	☐	
☐	**Outside Storage Areas (Temporary)**				
	A.1. Are materials protected from rain fall?	☐	☐	☐	
	B. Are materials protected from run-on?	☐	☐	☐	
	C. Are materials protected from run-off?	☐	☐	☐	
☐	**Site Specific Practices- Exposure Minimization Practices**				
	A. Are containment dikes/curbing in place and functioning properly?	☐	☐	☐	
	B. Are drip pans in place to contain leaks?	☐	☐	☐	
	C. Are collection systems to contain spills in place maintained and functioning properly?	☐	☐	☐	
	D. 1. Are sumps in place to collect spoils or leaks?	☐	☐	☐	
	2. Are sump pumps in place?	☐	☐	☐	
	3. Are sump pumps manually operated?	☐	☐	☐	
	4. Do sump pumps discharge spoils to appropriate disposal areas?	☐	☐	☐	
	E. Are materials that contain potential pollutant sources covered?	☐	☐	☐	
	F. Are vehicles positioned during loading/unloading to minimize exposure to storm water	☐	☐	☐	

ATTACHEMENT J-1502000-32
BACHELOR QUARTERS LOCATIONS

See Attachment J-1502000-32 listed in MCAS Beaufort BOS Facility Investment Inventory

ATTACHEMENT J-1502000-33
MCAS AIRCRAFT HANGERS AND SQUADRON ADMINISTRATION INVENTORY

See Attachment J-1502000-33 listed in MCAS Beaufort BOS Facility Investment Inventory

ATTACHEMENT J-1502000-33-01
AIRCRAFT HANGERS DOOR INVENTORY

See Attachment J-1502000-33-01 listed in MCAS Beaufort BOS Facility Investment Inventory

ATTACHEMENT J-1502000-33-02
ANNUAL CLEANING REQUIREMENTS FOR VERTICAL LIFT FABRIC DOORS (VLFD) AT HANGAR 2146, HANGAR 3060 AND HANGAR 3090

Provide annual cleaning of the Vertical Lift Fabric Doors at Hangars 2146, 3060, and 3090.

FABRIC CLEANING:

1. Use a degreaser to clean oils off fabric, especially prior to patching fabric. Do NOT use Acetone or Ether as it will dissolve the protective layer of the fabric.

2. Use mild soap and water to clean dirt off fabric.

3. A pressurized sprayer may be used to clean large areas of fabric. Caution should be used to keep the sprayer nozzle a minimum of 6" away from the fabric surface to avoid damaging the fabric.

ATTACHEMENT J-1502000-33-03
QUARTERLY PREVENTIVE MAINTENANCE REQUIREMENTS FOR VERTICAL LIFT FABRIC DOORS (VLFD) AT BUILDING 2146

Background: A Vertical Lift Fabric Door (VLFD) manufactured by International Door Incorporated (IDI) of Canton, MI failed and collapsed at MCAS New River on June 4, 2021. The failure resulted from a wire rope lift-cable pulling through U-clamps at the cable termination point while the VLFD was in the maximum load "UP" position.

Perform quarterly preventive maintenance on U-clamps.

Location: Hangar 2146

There are five Vertical Lift Fabric Doors Each door has 6 U

Clamps (3 on each side). Each U-clamp has two 5x6x2=

60 total bolts

The torque on the bolts on the Vertical Lift Fabric Doors in 2146 need to be retightened/checked to 95 ft/lbs once a quarter. The bolts are located at the bottom of each door on the left and right sides.

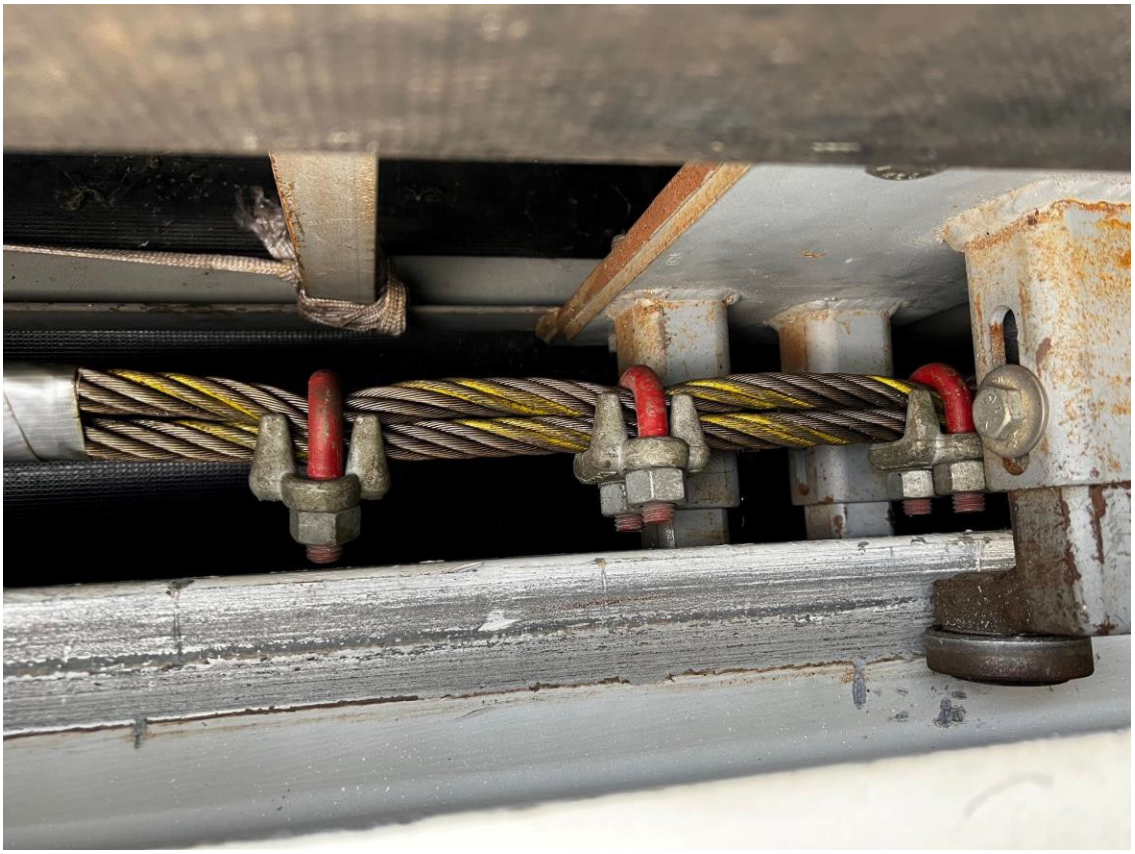

Tumb ack

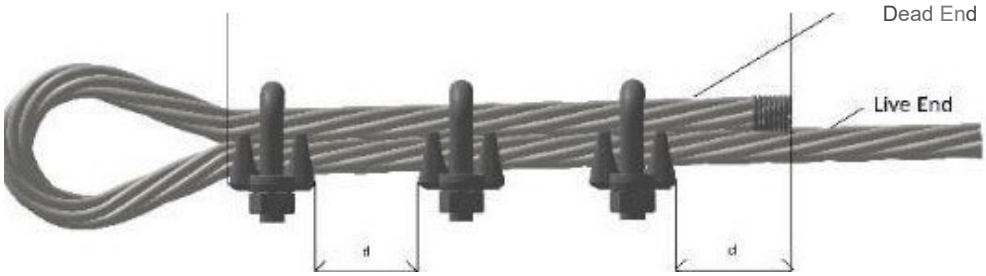

AS890 VERTICAL LIFT FABRIC DOOR (VLFD) MAINTENANCE PROGRAM

Yearly:

- Check oil in gearbox. Drain, flush and replace oil when required. Use Mobil SHC-626 synthetic oil or equal.
- Drum Support Bearings – Lubricate with all-purpose chassis lube at grease fittings.
- Chain Coupling – Lubricate lightly with SAE 10W oil.
- Magnetic Brake - Routine maintenance not required. As brake wears and decreases in thickness, the air gap will increase. While checking the air gap, measure the gap around the socket screws.
    1. Loosen the socket head cap screw that attaches the brake to the motor end bell.
    2. Depending if the air gap needs to be increased/ decreased, turn the adjusting nut accordingly. A quarter or half turn is usually sufficient for adjusting purposes.
    3. After adjusting the nut, tighten the socket head cap screw back onto the brake
    4. Measure the air gap for spacing. Repeat process to achieve recommended setting. Refer to brake instruction manual for details.

Quarterly:

- Lifting Cables – Visually inspect wire rope clamps and cables for cable slippage and torque mark movement on wire rope clamp nuts. Torque wire rope clamp nuts to 95-foot pounds.

Every two weeks:

- Lifting Cables – With door raised, visually inspect lifting cables at the motor operator and cable winding drums for fraying or damage. Replace if there is any indication of damage to cables.

ANNUAL PREVENTATIVE MAINTENANCE CHECKLIST - AS890 VERTICAL LIFT FABRIC DOORS (VLFD)
To be conducted on each of the 24 door panels

DATE OF INSPECTION: _____ DOOR NUMBER:

LINE	DESCRIPTION	NORTH SIDE CHECK	SOUTH SIDE CHECK	REMARKS
1	CHECK OIL IN GEARBOX			
2	LUBRICATE DRUM SUPPORT BEARINGS			
3	LUBRICATE CHAIN COUPLING			LUBRICATE LIGHTLY WITH SAE 10W OIL
4	ADJUST MAGNETIC BRAKE AIR GAP			REFER TO BRAKE INSTRUCTION MANUAL FOR DETAILS

Attach and submit checklist to tickets / work order

QUARTERLY PREVENTATIVE MAINTENANCE CHECKLIST - AS890 VERTICAL LIFT FABRIC DOORS (VLFD)
To be conducted on each of the 24 door panels

DATE OF INSPECTION: _____ DOOR NUMBER:

LINE	DESCRIPTION	NORTH SIDE CHECK	SOUTH SIDE CHECK	REMARKS
1	CHECK CABLES FOR ANY ABNORMAL CONDITIONS			REPORT ABNORMAL CONDITIONS FOR FURTHER EVALUATION
2	CHECK FOUR WIRE ROPE CLAMPS SPACED AT 4.5" APART			CORRECT AND REPORT INSTANCES OF NON-COMPLIANCE FOR FURTHER EVALUATION.
3	TORQUE WIRE ROPE CLAMP NUTS TO 130 FT-LBS			REPORT INSTANCES OF NON-COMPLIANCE.
4	CHECK WIRE ROPE CLAMP ORIENTATION			SADDLE SHOULD BE ON LIVE END OF WIRE ROPE.
5	MARK ALL NUTS ON WIRE ROPE CLAMPS WITH TORQUE STRIPE AFTER TIGHTENING			
6	MARK WIRE ROPE AT WIRE ROPE CLAMPS TO IDENTIFY A SLIP IN THE LIFT CABLES			
7	CHECK PIN AND COTTER PIN HOLDING PULLEY TO THE DOOR FOR ABNORMAL CONDITIONS			

Immediately lock out the door if:

- Less than three wire rope clamps exist.
- Cannot space wire rope clamps at 4.5" apart.
- Cannot torque all wire rope clamps to 130 FT-LBS.
- Missing cotter pin on the axle holding the pulley to the door.
- Deformed pin holding pulley to the door.

Attach and submit checklist to tickets / work order.

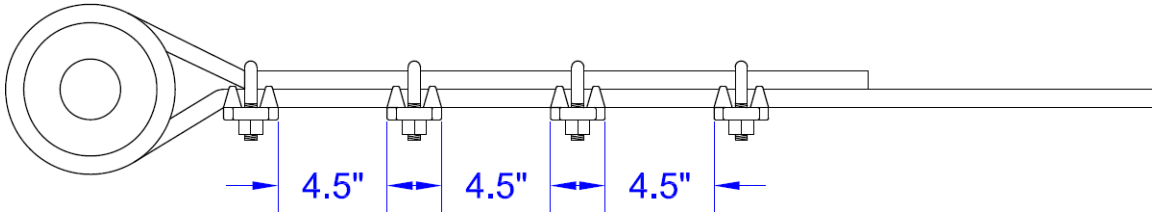

FIGURE OF PROPER SPACING OF WIRE ROPE CLAMP

BI-WEEKLY PREVENTATIVE MAINTENANCE CHECKLIST - AS890 VERTICAL LIFT FABRIC DOORS (VLFD)
To be conducted on each of the 24 door panels

DATE OF INSPECTION: _____ DOOR NUMBER:

LINE	DESCRIPTION	NORTH SIDE CHECK	SOUTH SIDE CHECK	REMARKS
1	CHECK CABLES FOR ANY ABNORMAL CONDITIONS			RAISE DOORS AND INSPECT LIFT CABLES AT MOTOR OPERATOR AND DRUMS FOR FRAYING OR DAMAGE.

Immediately lock out the door if there is any indication of damage to lift cables. Attach and submit checklist to tickets / work order.

ATTACHMENT J-1502000-34
MARINE CORPS AIR STATION OIL/WATER SEPARATOR TANKS

See Attachment J-1502000-34 listed in MCAS Beaufort BOS Facility Investment Inventory

ATTACHMENT J-1502000-35
SOLAR PANEL INVENTORY (HOT WATER) LOCATIONS

See Attachment J-1502000-35 listed in MCAS Beaufort BOS Facility Investment Inventory

ATTACHMENT J-1502000-36
GALLEY HOOD CLEANING LOCATIONS

See Attachment J-1502000-36 listed in MCAS Beaufort BOS Facility Investment Inventory

ATTACHMENT J-1502000-37
PROPANE AIR BLENDER INVENTORY

See Attachment J-1502000-37 listed in MCAS Beaufort BOS Facility Investment Inventory

ATTACHMENT J-1502000-38
UPS INVENTORY

See Attachment J-1502000-38 listed in MCAS Beaufort BOS Facility Investment Inventory

ATTACHMENT J-1502000-39
LHD DECK INVENTORY

See Attachment J-1502000-39 listed in MCAS Beaufort BOS Facility Investment Inventory

ATTACHMENT J-152000-40
FALL PROTECTION EQUIPMENT

See Attachment J-1502000-40 listed in MCAS Beaufort BOS Facility Investment Inventory

FALL PROTECTION SAFETY AND MAINTENANCE INSTRUCTIONS

All potential users of this equipment and user's management must read and understand all instructions fully; failure to do so could result in serious or fatal injury.
The user is ultimately responsible for his or her own safety when using a Rigid Lifelines fall arrest product. The following safety and maintenance instructions are designed to make your Rigid Lifelines product as safe as possible. To obtain the utmost level of safety that this equipment can provide all instructions must be followed thoroughly.
All Rigid Lifelines Fall Arrest systems are designed with a safety factor of two.
Fall Arrest systems are fully engineering systems based on calculations and testing. All systems are designed to take a maximum arresting force to 900 lbs. per person.
Rigid Lifelines fall arrest systems should be inspected annually and at minimum as described below. For the highest level of safety, Rigid Lifelines fall arrest systems can be checked before each use as described below. The user or management should determine what system will be inspected when, and it is always a good idea to keep an inspection log. Above all simple common sense must always be used to keep safety first.

BELOW ARE INSTRUCTIONS FROM THE OEM MANUALS – THE CONTRACTOR IS RESPONSIBLE FOR REVIEWING THE MANUAL AND PROVIDING ALL MAINTENANCE IAW WITH OEM INSTRUCTIONS THAT MAY OR MAY NOT BE LISTED IN THE ITEMS BELOW.

Building 418 and Building 1256:
Rigid Lifelines Traveling Bridge Fall Protection Systems
Overview:
• Inspect and maintain equipment
• Understand the limitations and requirements of the equipment
• Understand the penalties of not following and understanding the instructions
• If any of the below items fail the product is unsafe and must be marked unsafe and the system's use must be discontinued until the system is fixed.

Fall Arrest Track
• Inspect for loose debris inside track
• Check track for cracks, holes, heavy rust, or deterioration
• If trussed track, inspect welds for stress cracks or broken welds
• Flange thickness should not be worn to less than 90% of original thickness
• Flange should not be bent more than 5 degrees below horizontal

Hanger System
• Inspect roof beam clamp bolts to see if tightened to 108 FT lbs. for 5/8" bolts and 210 FT lbs. for 3/4" bolts.
• See if all adjustment screws are tight and accounted for
• For side support brackets inspect all mounting bolts, nuts and lock washers for proper installation and tightness
• For drop rod support brackets, inspect for broken welds or stress cracks, inspect drop rods for being bent along with checking drop rod bolts for tightness and proper installation
• Inspect all beam clamps for proper installation and if tightened to 108 FT.lbs for 5/8" bolts and 210 FT.lbs for 3/4" bolts.

End Stop Bumper
• Inspect to see if end stop bumper is installed at each end of track
• Inspect rubber for wear
• Check for lock washer and nut and check for tightness

Splices
• Check for installation of all alignment bolts and inspect for tightness (on track)
• Inspect the four 1/2” diameter through bolts and check for 50 FT.lbs on bolt head (on Truss)
• Splices should be installed within 1 foot of hanger

Sway Bracing
• Check for proper tightness
• Check for hanging or broken or frayed cables
• Check all connections for proper installation

End Trucks
• Roll bridge to each end of runway checking smoothness for wheel and bearing use
• Inspect bolts on fixed end truck (one per bridge) to see if all tightened

Training Procedures
• Locate all fall hazards and eliminate
• Find and reduce free fall distances
• Properly fit a harness
• Inspect and maintain equipment
• Know the limitations of the equipment
• Know the consequence of not following safety instructions

Building 3060:
Flexible Lifeline Systems – Capital Safety

THE FALL PROTECTION LIFELINE SYSTEMS SPECIFIED IN THIS PROJECT ARE DESIGNED TO COMPLY WITH OSHA 1910/1926 AND ANSI 2359.(0-4)- 2009. ALL PERSONS USING THESE FALL PROTECTION LIFELINE SYSTEMS MUST WEAR APPROPRIATE PERSONAL PROTECTIVE EQUIPMENT APPROVED BY FLEXIBLE LIFELINE SYSTEMS. THIS INCLUDES BUT IS NOT LIMITED TO A FULL BODY HARNESS WITH SELF RETRACTING LIFELINE OR SHOCK ABSORBING LANYARD.

1. USE & MAINTENANCE OF THE FALL PROTECTION COMPONENTS MUST COMPLY WITH THE USER'S MANUAL ISSUED BY FLEXIBLE LIFELINE SYSTEMS.
2. THE FALL PROTECTION LIFELINE SYSTEMS SPECIFIED IN THIS PROJECT ARE DESIGNED TO PROVIDE A 1 USER FALL ARREST PER SYSTEM. (ANSI 2359.6-2009 3.3.1.1) A DIAGRAM OF THE WORKERS USING THE SYSTEM IS SHOWN ON DWG. NO. 2.0 & 2.1. THE MINIMUM WEIGHT OF WORKER AND TOOLS USING THE SYSTEM IS 75 LBS AND THE MAXIMUM WEIGHT OF WORKER AND TOOLS USING THE SYSTEM IS 310 LBS. WORKERS SHALL BE TRAINED ON PROPER USE AND CARE OF SYSTEM. (ANSI 2359.6-2009 3.3.1.3).
3. IN THE EVENT OF A FALL ON A SYSTEM, WRITTEN NOTICE MUST BE SUBMITTIED TO FLEXIBLE LIFELINE SYSTEMS FOR IMMEDIATE INSPECTION AND RE-CERTIFICATION OF THE SYSTEM BEFORE THE SYSTEM IS USED AGAIN.
4. LAYOUT OF THE SYSTEM, INCLUDING WHERE IT IS LOCATED, IS SHOWN ON DWG. NO. 1.0 & 1.1. A COMPLETE ASSEMBLY OF ALL THE SYSTEM COMPONENTS IS SHOWN ON DWG. NO. 2.0 & 2.1 (ANSI 2359.6-2009 3.3.1.2). INSTRUCTIONS FOR SAFE ACCESS TO, EGRESS FROM AND USE OF THE SYSTEMS ARE SHOWN ON DWG. NO. 1.0 & 1.1 (ANSI 2359.6-2009 3.3.1.11).
5. SPECIFICATIONS FOR ALL COMPONENTS, INCLUDING SIZES AND MINIMUM REQUIRED BREAKING STRENGTHS ARE DESCRIBED ON THE ATIACHED TECHNICAL DATA SHEETS, SEE OWNER'S MANUAL PROVIDED (ANSI 2359.6-2009 3.3.1.4).
6. PROOF /PULL TESTING IS REQUIRED BEFORE A SYSTEM MAY BE PUT INTO USE. PROOF /PULL TEST LOADING REQUIREMENTS ARE SHOWN ON DWG. NO. 2.0 & 2. 1.
7. THERE ARE NO CHEMICAL, TEMPERATURE, RADIATION OR WEATHER FACTORS THAT MAY TEMPORARILY OR PERMANENTLY RENDER THE SYSTEM UNSAFE TO USE (ANSI 2359.6-2009 3.3.1.6).
8. THE EXPECTED PERFORMANCE OF THE SYSTEM, INCLUDING THE MAXIMUM LOADINGS OF ALL COMPONENTS, SAGS AND DEFLECTIONS, DEPLOYMENT OF ENERGY SHOCK ABSORBERS AND THE

MAXIMUM ARREST FORCE (MAF) ARE FOUND ON DWG. NO. 2.0 & 2. 1. THERE ARE NO VARIABLE ENVIRONMENTAL CONDITIONS SUCH AS TEMPERATURE. ALSO SEE OWNER'S MANUAL PROVIDED FOR ADDITIONAL INFORMATION (ANSI 2359.6-2009 3.3.1.7).

9. A DESCRIPTION OF THE GREATEST REQUIRED CLEARANCES FOR ALL PERMITIED WORKER LOCATIONS, CONNECTION MEANS AND FULL BODY HARNESS COMBINATIONS ARE SHOWN ON DWG. NO 3. 1. THERE ARE NO CLEARANCE VARIATIONS DUE TO ENVIRONMENTAL CONDITIONS (ANSI 2359.6-2009 3.3.1.8).

10. ALL FALL PROTECTION LIFELINE COMPONENTS MUST BE INSTALLED ACCORDING TO THE MANUFACTURER'S INSTRUCTIONS. ANY DEVIATION FROM THESE DESIGN DRAWINGS MUST BE APPROVED BY FLEXIBLE LIFELINE SYSTEMS. INSTRUCTIONS FOR ASSEMBLY AND INSTALLATION ARE SHOWN ON DWG. NO. 2.0 & 2.1. THE SYSTEMS ARE PERMANENTLY INSTALLED THEREFORE THERE ARE NO INSTRUCTIONS FOR RELOCATION (ANSI 2359.6-2009 3.3.1.9). FLEXIBLE LIFELINE SYSTEMS HAS DESIGNED THE SYSTEM TO BE PERMANENTLY INSTALLED AND "AS BUILT" DRAWINGS SHALL BE ISSUED AFTER INSTALLATION (ANSI 2359.6-2009 3.3.1.13 AND 3.3.1.14).

11. THE FALL PROTECTION SYSTEMS SPECIFIED MUST BE INSPECTED AND RE-CERTIFIED FOR USE ANNUALLY BY A QUALIFIED PERSON. INSPECTION REQUIREMENTS MUST BE REVIEWED BY A PROFESSIONAL ENGINEER EVERY 5 YEARS. ACTIVE FALL PROTECTION SYSTEMS SHALL BE THOROUGHLY REVIEWED BY AN ENGINEER AT A FREQUENCY TO BE DETERMINED BY THE ORIGINAL DESIGNER OR OTHER SIMILARLY QUALIFIED ENGINEER BUT NOT TO EXCEED FIVE (5) YEARS. THIS RECERTIFICATION PROCESS SHALL INCLUDE A REVIEW OF THE ORIGINAL DOCUMENTS PREPARED FOR THE SYSTEM AND THEIR CONTINUED APPLICABILITY. AS A MINIMUM, THE CRITERIA AS OUTLINED IN ANSI 2359.6-2009, SECTION 3.3.1, SHALL ALSO BE CONSIDERED AND THE RESULT OF THE CERTIFICATION SHALL RESULT IN A REPORT OR SET OF DOCUMENTS (ANSI 2359.6-2009 3.3.1.10 AND 3.3.1.15).

12. RESCUE OF ANY FALLEN EMPLOYEE SHALL BE PROVIDED AS DESCRIBED IN OSHA (PROPOSED 29 CFR 1910.129(c) (6) AND 1926.502(d) (20)), "THE EMPLOYER SHALL PROVIDE FOR PROMPT RESCUE OF EMPLOYEES IN THE EVENT OF A FALL OR SHALL ASSURE THAT EMPLOYEES ARE ABLE TO RESCUE THEMSELVES." SINCE SELF-RESCUE CANNOT ALWAYS BE ASSURED, AN ADDITIONAL EMPLOYEE SHALL BE PRESENT IN THE WORK AREA TO NOTIFY EMERGENCY SERVICES AND/OR PERFORM A RESCUE IN ACCORDANCE WITH THE RESCUE PROCEDURE (ANSI 2359.6-2009 3.3.1.12).

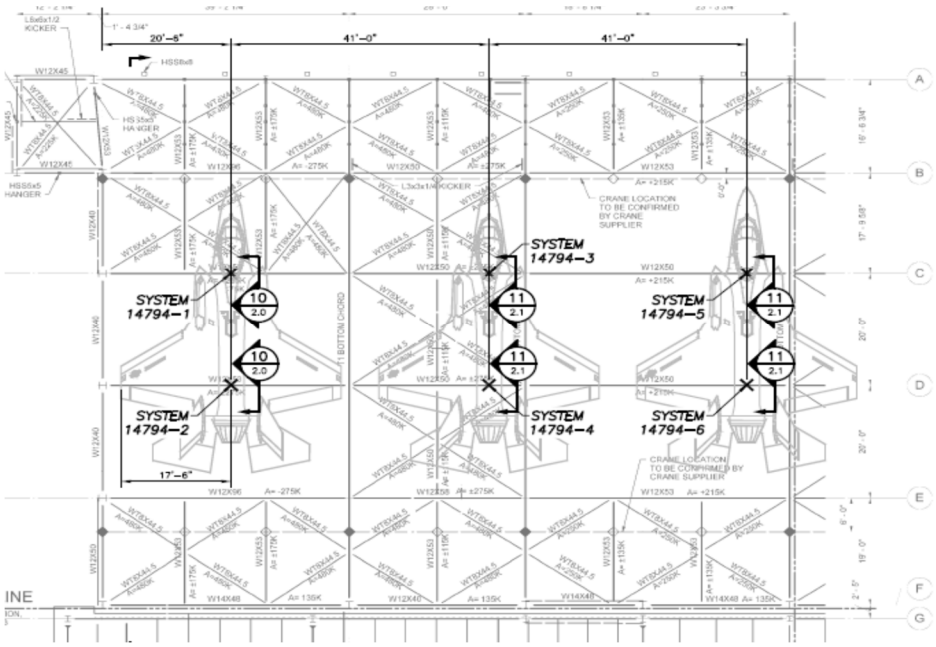

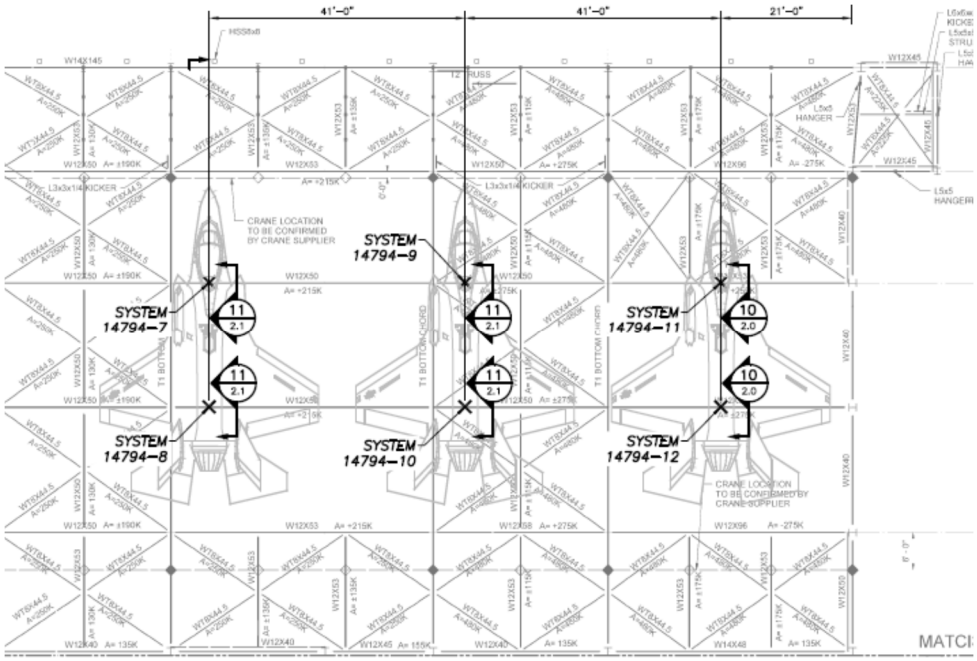
41'-0"
41'-0"
21'-0"
SYSTEM 14794-7
SYSTEM 14794-8
SYSTEM 14794-9
SYSTEM 14794-10
SYSTEM 14794-11
SYSTEM 14794-12
CRANE LOCATION TO BE CONFIRMED BY CRANE SUPPLIER
T1 BOTTOM CHORD
T1 BOTTOM (HIDDEN)
KICKER
HANGER
MATCH

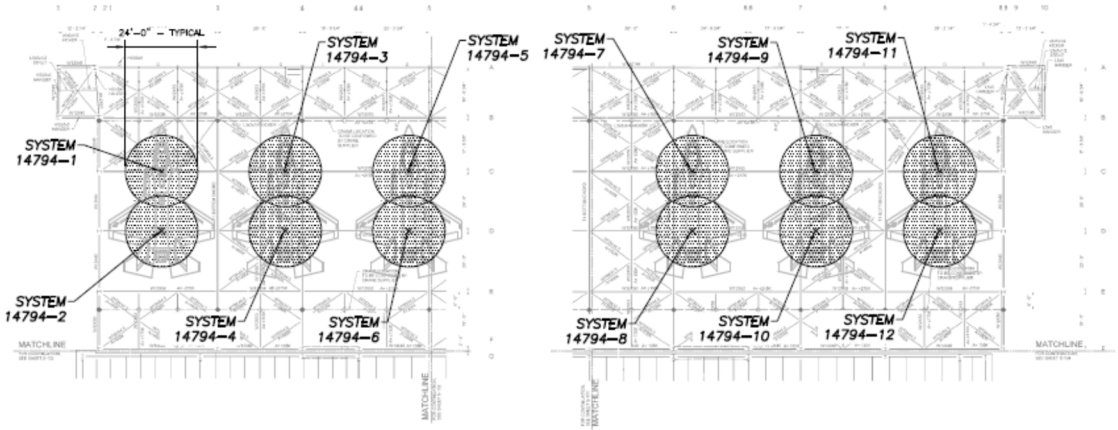
24'-0" - TYPICAL
SYSTEM 14794-1
SYSTEM 14794-2
SYSTEM 14794-3
SYSTEM 14794-4
SYSTEM 14794-5
SYSTEM 14794-6
SYSTEM 14794-7
SYSTEM 14794-8
SYSTEM 14794-9
SYSTEM 14794-10
SYSTEM 14794-11
SYSTEM 14794-12
MATCHLINE

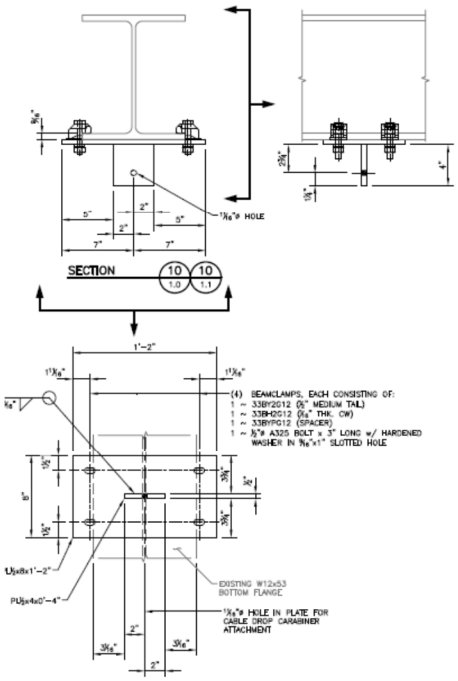

SYSTEMS DESIGNED FOR MAXIMUM 1 USER, WORKING IN ANY CONFIGURATION, ON ANY SYSTEM, AT ANY TIME.

PULL TEST REQUIREMENTS:
PULL TEST VERTICALLY DOWNWARD TO 1.35 KIPS

REFER TO OWNER'S MANUAL AND PROVIDED TECHNICAL DATA SHEETS FOR CAPACITIES, ASSEMBLY AND INSTALLATION INSTRUCTIONS, AND CARE AND MAINTENANCE INFORMATION.

MAXIMUM ARREST FORCE (MAF) = 1.35 kips

FLEXIBLE LIFELINE SYSTEMS
www.flexiblelifeline.com

14325 WEST HARDY ROAD
HOUSTON, TEXAS 77060
PHONE: (281) 445-8821
TOLL FREE: (800) 778-9048
FAX: (281) 445-8225

DATE: _____ SYSTEM #: _____

TYPE OF FALL PROTECTION SYSTEM: (ARREST) OR RESTRAINT
(CIRCLE ONE)

NUMBER OF USERS PER SYSTEM: 1 INSTALLER INT: _____

– THIS SYSTEM MUST BE VISUALLY INSPECTED BEFORE EVERY USE AND ANNUALLY RECERTIFIED BY AN AUTHORIZED FLS INSTALLER.

– ONLY FLS AUTHORIZED LANYARDS / RETRACTABLES MAY BE USED WITH THIS SYSTEM.

– ALL USERS MUST BE TRAINED BEFORE USAGE. FOR ADDITIONAL INFORMATION, PLEASE REFER TO THE SYSTEM MANUAL.

SYSTEM TAG

TO BE FILLED OUT BY INSTALLER & ATTACHED TO EACH SYSTEM

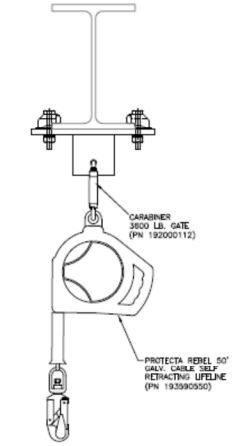

SELF RETRACTING LIFELINE ATTACHES TO SINGLE POINT ANCHOR w/ CARABINER

Building 2146
Trolley System

SPECIFICATION SECTION 41 23 00 FALL ARRESTOR SYSTEM

PRODUCT DATA

DESCRIPTION	QTY
BEAM TROLLEY	8 EACH
50 FT STAINLESS STEEL SELF RETRACTING LIFLINE AND CARABINER	8 EACH
TAGLINE - 50 FT	8 EACH

The Ultimate in Fall Protection

Instructions for the following series products:

Beam Trolley Anchorage

(Model Numbers: 2103143, 2103147, 2103149)

USER INSTRUCTION MANUAL TROLLEY ANCHORAGE CONNECTOR

This manual is intended to meet the Manufacturer's Instructions as required by ANSI-Z359.1 and should be used as part of an employee training program as required by OSHA.

5.0 INSPECTION

5.1 FREQUENCY:

- **BEFORE EACH USE:** Inspect trolley according to sections 5.2 and 5.3.
- **ANNUALLY:** The trolley must be inspected by a competent person other than the user. See sections 5.2 and 5.3 for inspection guidelines.

5.2 INSPECTION STEPS:

Step 1. Inspect trolley for damage. Look for cracks or deformities. Look for excessive wear or damage to the anchorage point. All fasteners must be secure.

Step 2. Inspect trolley wheels. All wheels should turn freely and be undamaged.

Step 3. Inspect entire unit for corrosion.

Step 4. The warning label must be present and fully legible. See section 9.0.

Step 5. Record inspection results in section 10.0.

WARNING: *If this equipment is subjected to the forces of a fall arrest, it must be removed from service and destroyed, or returned to DBI-SALA for inspection and repair.*

5.3 If inspection reveals an unsafe or defective condition remove from service and destroy or contact DBI-SALA for repair.

6.0 MAINTENANCE, SERVICING, STORAGE

6.1 MAINTENANCE: Clean the trolley using water and mild detergent. Wipe dry with a clean cloth and hang to air dry. Do not force dry with heat. An excessive build-up of dirt, paint, etc. may prevent the trolley from working correctly. No lubrication is required.

6.2 SERVICING: Servicing must be completed by an authorized service center. Authorization must be in writing.

6.3 STORAGE: Store this equipment in a cool, dry, clean environment. Inspect the trolley after extended storage.

Figure 8 - Attaching Trolley To Beam - Anchorage Point

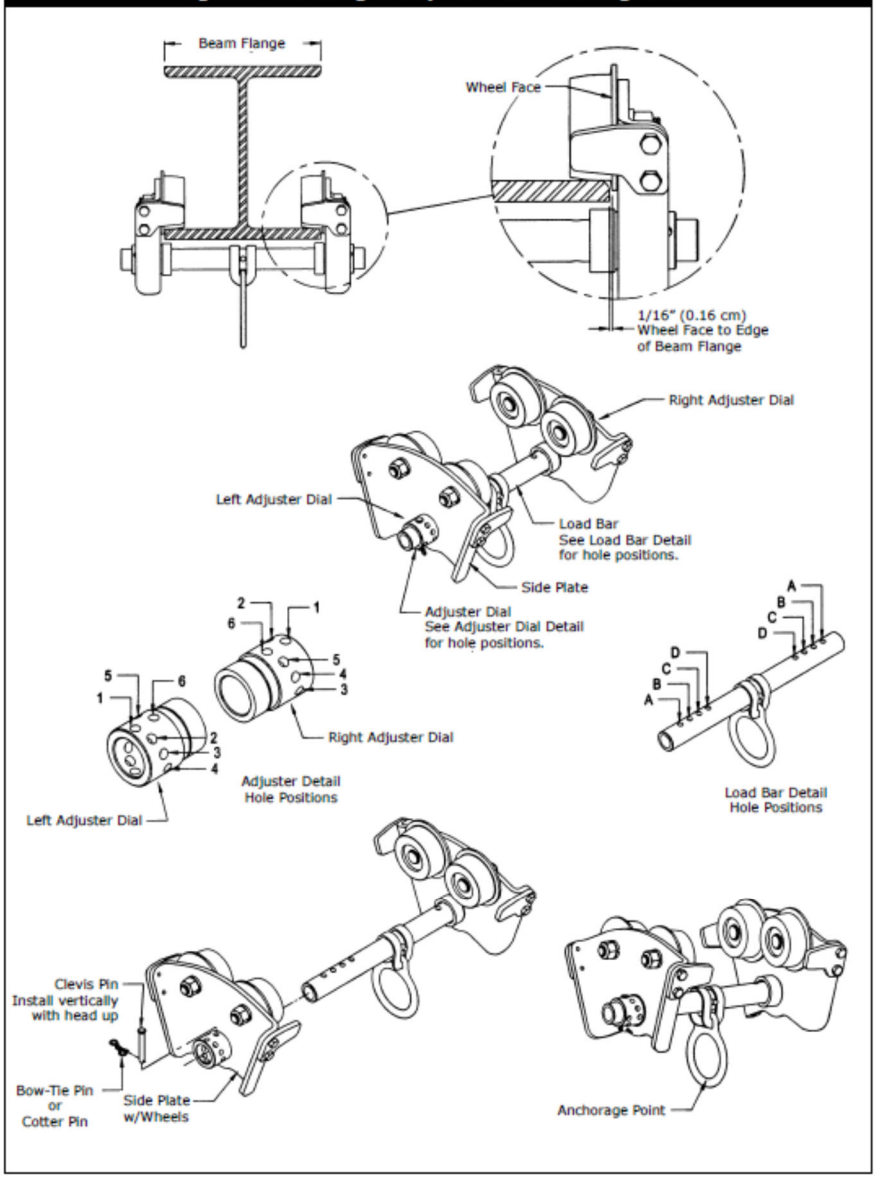

7.2 DIMENSIONS (IN INCHES):

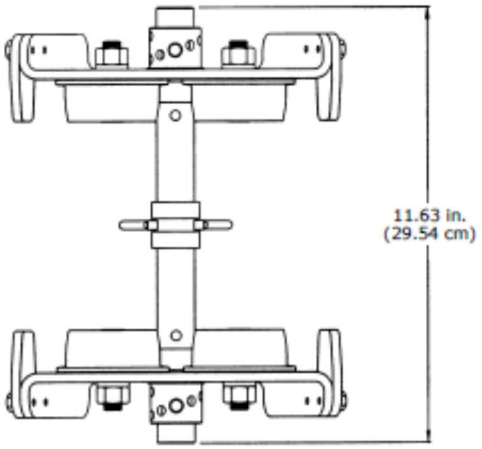

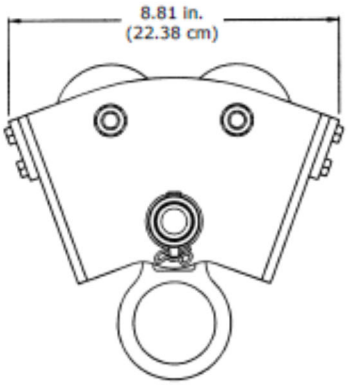

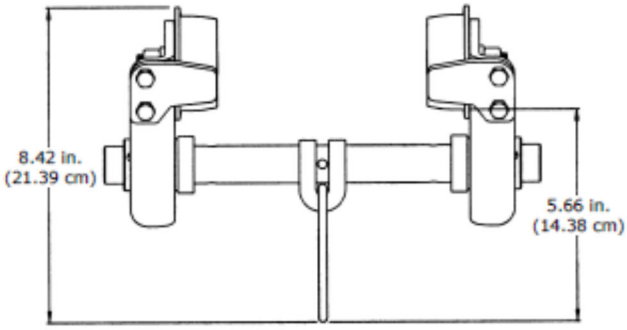

8.0 TERMINOLOGY

AUTHORIZED PERSON: A person assigned by the employer to perform duties at a location where the person will be exposed to a fall hazard (otherwise referred to as "user" for the purpose of these instructions).

RESCUER: Person or persons other than the rescue subject acting to perform an assisted rescue by operation of a rescue system.

CERTIFIED ANCHORAGE: An anchorage for fall arrest, positioning, restraint, or rescue systems that a qualified person certifies to be capable of supporting the potential fall forces that could be encountered during a fall or that meet the criteria for a certified anchorage prescribed in this standard.

QUALIFIED PERSON: A person with a recognized degree or professional certificate and with extensive knowledge, training, and experience in the fall protection and rescue field who is capable of designing, analyzing, evaluating and specifying fall protection and rescue systems to the extent required by this standard.

COMPETENT PERSON: One who is capable of identifying existing and predictable hazards in the surroundings or working conditions which are unsanitary, hazardous, or dangerous to employees, and who has authorization to take prompt corrective measures to eliminate them.

INSPECTION AND MAINTENANCE LOG	
SERIAL NUMBER:	
MODEL NUMBER:	
DATE PURCHASED:	DATE OF FIRST USE:

INSPECTION DATE	INSPECTION ITEMS NOTED	CORRECTIVE ACTION	MAINTENANCE PERFORMED
Approved By:			
Approved By:			
Approved By:			
Approved By:			
Approved By:			
Approved By:			
Approved By:			
Approved By:			
Approved By:			
Approved By:			
Approved By:			
Approved By:			
Approved By:			
Approved By:			
Approved By:			
Approved By:			
Approved By:			
Approved By:			
Approved By:			

Capital Safety - USA • 3833 SALA Way • Red Wing, MN 55066-5005 • Ph: 651.388.8282 • Fax: 651.388.5065

Technical Bulletin MISC007 Rev. B

Subject: Certification / Inspection Frequency

The following information describes the normal servicing, recertification and inspection requirements for the DBI/SALA products. Consult the user instruction manuals for complete details and information. Consult DBI/SALA for requirements relating to equipment used under special circumstances.

SELF RETRACTING LIFELINES (SRL), CLIMB ASSIST SYSTEMS

*DBI/SALA and ANSI require the product to be inspected at least annually by a Competent Person. Extreme conditions of use may require increasing inspection frequency. (In Canada, CSA requires SRL's to be serviced within two years of mfg. date, thereafter annually)

*Before each use, DBI/SALA, OSHA and ANSI require SRL's to be inspected (by the user).

*After an impact, the SRL must be removed from service (per DBI/SALA, OSHA and ANSI) and inspected. Servicing may be required.

WINCHES

*DBI/SALA recommends that Salalift I and II winches be serviced and recertified **every year**. Extreme working conditions may require increasing the frequency.

*On a monthly basis, DBI/SALA recommends that a competent person other than the user formally inspect the winches.

*Before each use, DBI/SALA requires winches to be inspected (by the user).

*After an impact, the winch must be removed form service and inspected. Servicing may be required.

RESCUE POSITIONING DEVICES (RPD'S)

*DBI/SALA recommends that RPD's be serviced and recertified **every year**. Extreme working conditions may require increasing the frequency.

*On a monthly basis, DBI/SALA recommends that a competent person other than the user formally inspect the RPD.

*Before each use, DBI/SALA requires the RPD to be inspected (by the user).

RESCUMATIC CONTROLLED DESCENT DEVICE

*DBI/SALA recommends that Rescumatics have maintenance check performed ***every 6 months*** by the user.

*On a monthly basis, DBI/SALA recommends that the Rescumatic be formally inspected by a competent person other that the user.

LAD SAF LADDER SAFETY SYSTEM

*DBI/SALA requires the Lad Saf system (including sleeve) by inspected at least **annually** by a competent person.

*Before each use, DBI/SALA and OSHA require the system to be inspected (by the user)

Capital Safety - USA • 3833 SALA Way • Red Wing, MN 55066-5005 • Ph: 651.388.8282 • Fax: 651.388.5065

*After an impact, the entire system (including the sleeve) shall be inspected by a competent person.

TRIPODS/DAVIT ARMS /SUPPORT STRUCTURES

*DBI/SALA requires at least a **monthly inspection** by a competent person.
*Before each use, DBI/SALA, OSHA and ANSI require an inspection (by the user).
*After an impact, remove the product from service and inspect. Servicing may be required.

LOAD ARRESTORS

*DBI/SALA requires the load arrestors to be serviced and recertified **every two years**. Extreme working conditions may require increasing the servicing frequency.
*Annually, a competent person should inspect the units.
*After an impact, the load arrestor must be removed from service and returned to a repair center for service/recertification.

HARNESSES/LANYARDS /POSITIONING EQUIPMENT /ROPE GRABS, ANCHORAGE CONNECTORS

*DBI/SALA and ANSI require the product to be inspected at least **annually** by a competent person.
*Before each use, DBI/SALA, OSHA and ANSI require an inspection (by the user).
*After an impact, the product must be removed from service (per DBI/SALA, OSHA and ANSI).

TEMPORARY HAORIZONTAL LIFELINE SYSTEM

*DBI/SALA requires the system to be inspected **annually** by a qualified person. Extreme working conditions may require increasing the service frequency.
*Before each use, and after installation, a qualified person shall inspect the system.
*After an impact, the system must be removed from service (per DBI/SALA, OSHA and ANSI) or returned to the factory for inspection and/or repair.

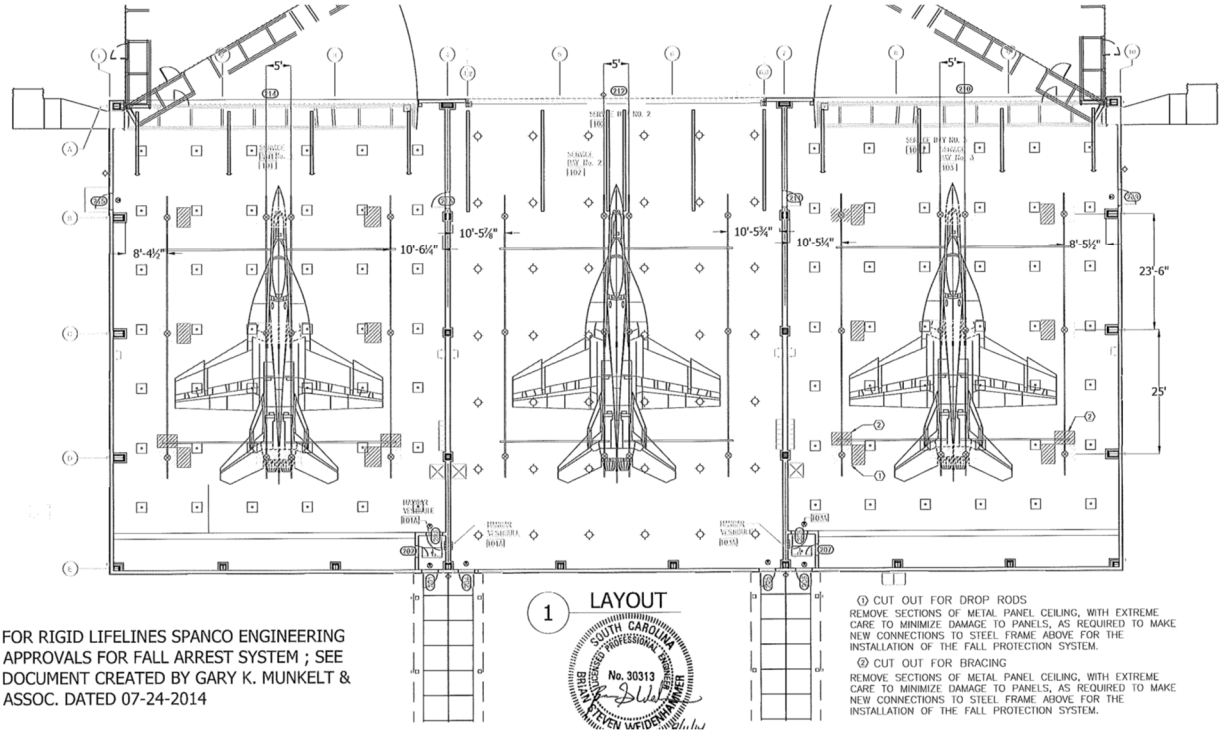

① CUT OUT FOR DROP RODS
REMOVE SECTIONS OF METAL PANEL CEILING, WITH EXTREME CARE TO MINIMIZE DAMAGE TO PANELS, AS REQUIRED TO MAKE NEW CONNECTIONS TO STEEL FRAME ABOVE FOR THE INSTALLATION OF THE FALL PROTECTION SYSTEM.

② CUT OUT FOR BRACING
REMOVE SECTIONS OF METAL PANEL CEILING, WITH EXTREME CARE TO MINIMIZE DAMAGE TO PANELS, AS REQUIRED TO MAKE NEW CONNECTIONS TO STEEL FRAME ABOVE FOR THE INSTALLATION OF THE FALL PROTECTION SYSTEM.

FOR RIGID LIFELINES SPANCO ENGINEERING APPROVALS FOR FALL ARREST SYSTEM ; SEE DOCUMENT CREATED BY GARY K. MUNKELT & ASSOC. DATED 07-24-2014

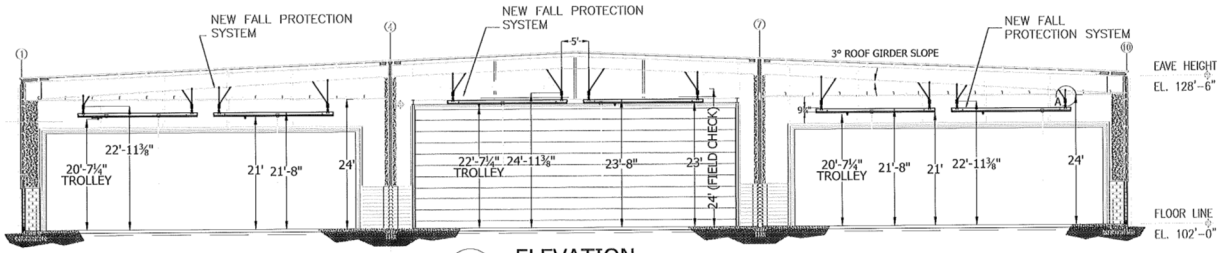

3 ELEVATION

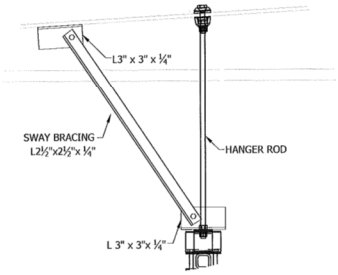

BRACING DETAIL A

FOR RIGID LIFELINES SPANCO ENGINEERING APPROVALS FOR FALL ARREST SYSTEM ; SEE DOCUMENT CREATED BY GARY K. MUNKELT & ASSOC. DATED 07-24-2014

FOR RIGID LIFELINES SPANCO ENGINEERING APPROVALS FOR FALL ARREST SYSTEM ; SEE DOCUMENT CREATED BY GARY K. MUNKELT & ASSOC. DATED 07-24-2014

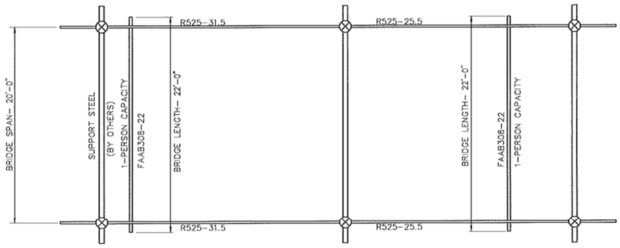

RUNWAY PLAN

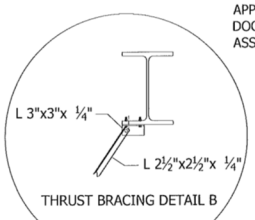

THRUST BRACING DETAIL B

NOTE:

SWAY BRACING AND THRUST BRACING : L2½"x2½"x ¼"
PAINT: EPOXY SAFETY YELLOW (SW MACROPOXY 646)
SEE SHEET 2 FOR SPECIFIC LOCATIONS
BOLTED TO SUPPORT STEEL AND ROOF PURLINS (BRACING LOCATION
SUBJECT TO CHANGE BASED ON UNSEEN CONDITIONS IN BAY 1 & 3 DI
CEILINGS)

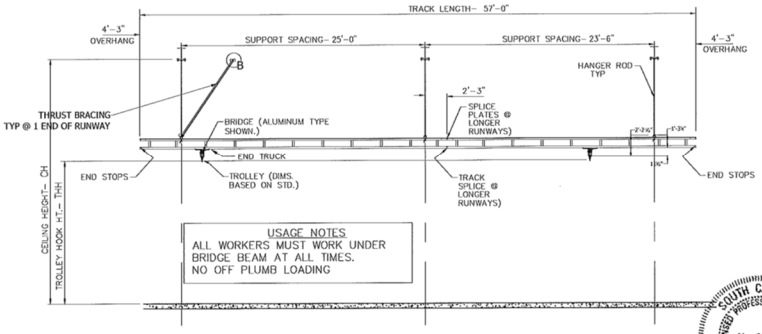

RUNWAY ELEVATION

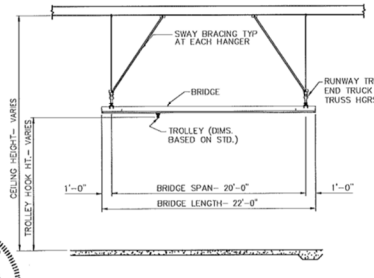

RUNWAY CROSS-SECTION

SOUTH CAROLINA LICENSED PROFESSIONAL ENGINEER No. 30313 BRIAN STEVEN WEIDENHAMMER 8/11/14

SOUTH CAROLINA LICENSED PROFESSIONAL ENGINEER No. 30313 BRIAN STEVEN WEIDENHAMMER 8/11/14

BLDG. 594 NORTH

1. 130 WATT SOLAR PANEL.
2. POWER CONTROLLER BOX 12 VDC OUTPUT.
3. 6 BATTERIES.
4. LIGHT BAR CONTROLLER.
5. DUAL THREE LIGHT BAR.
6. 900 MHZ ANTENNA.

BLDG. 594 EAST

1. POWER CONTROLLER BOX 12 VDC OUTPUT.
2. LIGHT BAR CONTROLLER.
3. DUAL THREE LIGHT BAR.
4. 900 MHZ ANTENNA.

BLDG. 2146 NORTH

1. 130 WATT SOLAR PANEL.
2. POWER CONTROLLER BOX 12 VDC OUTPUT.
3. 6 BATTERIES.
4. LIGHT BAR CONTROLLER.
5. DUAL THREE LIGHT BAR.
6. 900 MHZ ANTENNA.

BLDG. 3060 NORTH

1. 900 MHZ ANTENNA.

BLDG. 600

1. 130 WATT SOLAR PANEL.
2. POWER CONTROLLER BOX 12 VDC OUTPUT.
3. 6 BATTERIES.
4. LIGHT BAR CONTROLLER.
5. TRIPLE LIGHT BAR
6. 900 MHZ ANTENNA.

BLDG. 1208

1. 130 WATT SOLAR PANEL.
2. POWER CONTROLLER BOX 12 VDC OUTPUT.
3. 6 BATTERIES.
4. LIGHT BAR CONTROLLER.
5. DUAL THREE LIGHT BAR.
6. 900 MHZ ANTENNA.

CALA AREA 1071 SIGN 1

1. 130 WATT SOLAR PANEL.
2. HERO CONTROLLER BOX 12 VDC OUTPUT.
3. 6 BATTERIES.

4. LOW VOLTAGE BLINKING HERO SIGN
5. 900 MHZ ANTENNA.

CALA AREA 1071 SIGN 2

1. 130 WATT SOLAR PANEL.
2. HERO CONTROLLER BOX 12 VDC OUTPUT.
3. 6 BATTERIES.
4. LOW VOLTAGE BLINKING HERO SIGN
5. 900 MHZ ANTENNA.

BLDG. 584

1. 900 MHZ ANTENNA.
2. HERO MASTER CONTROLLER

BLDG. 600

1. 900 MHZ ANTENNA.
2. HERO SECONDARY CONTROLLER

SO585841 & SO591542 Joyner Electric (MCAS Beaufort) System Operation (Visual System Representation)

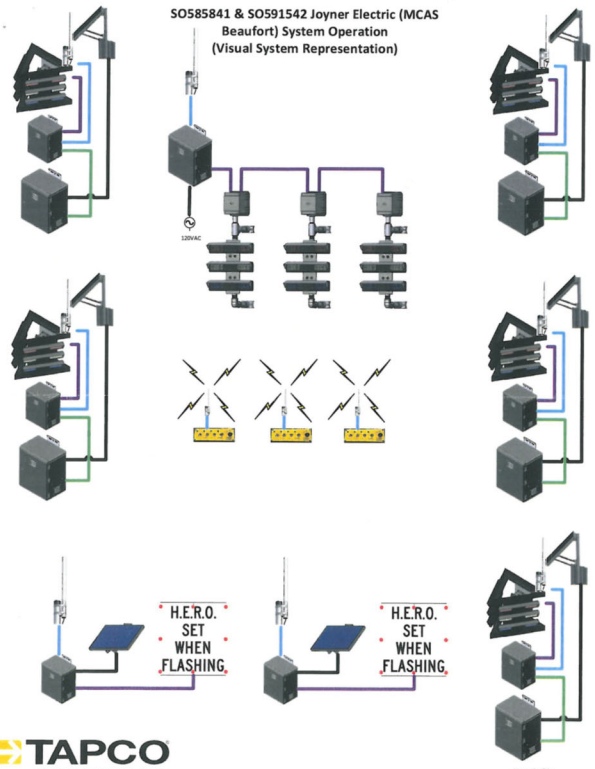

TAPCO
TRAFFIC & PARKING CONTROL CO., INC.

SO585841 & SO591542 Joyner Electric (MCAS Beaufort) System Operation

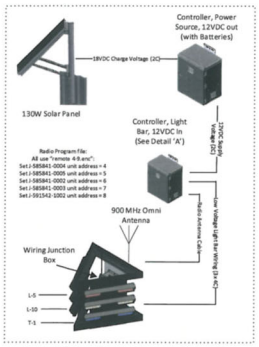

5 Qty Dual Three Light Bar Warning Systems (Bldg 594 x 2, Bldg 1086, New Hangar, Hangar 2145,)

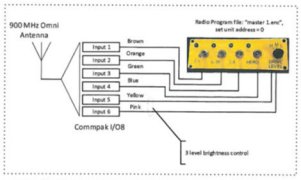

Ops Bldg Lightning Condition Warning System Activation - Master Controller

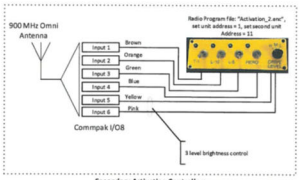

Secondary Activation Controllers

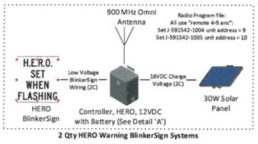

2 Qty HERO Warning BlinkerSign Systems

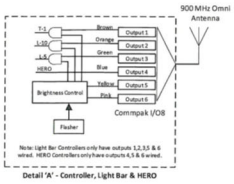

Detail 'A' - Controller, Light Bar & HERO

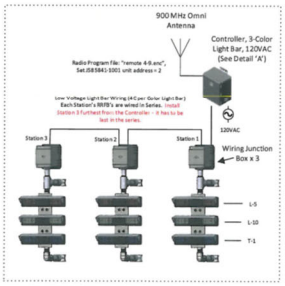

3 Qty Triple Light Bar Assemblies (Old Control Tower Observation Deck Warning System)

TAPCO
TRAFFIC & PARKING CONTROL CO., INC.

SO585841 & SO591542 Joyner Electric (MCAS Beaufort) Activation Switch Operation

Activation Switches			Warning Lights			
Switch Label	Activation Box 1	Activation Box 2	Blue Light Bars	Yellow Light Bars	Red Light Bars	HERO BlinkerSigns
T-1	Off	Off	Off	X	X	X
	Off	On	On	X	X	X
	On	Off	On	X	X	X
	On	On	On	X	X	X
L-10	Off	Off	X	Off	X	X
	Off	On	X	On	X	X
	On	Off	X	On	X	X
	On	On	X	On	X	X
L-5	Off	Off	X	X	Off	X
	Off	On	X	X	On	X
	On	Off	X	X	On	X
	On	On	X	X	On	X
HERO	Off	Off	X	X	X	Off
	Off	On	X	X	X	On
	On	Off	X	X	X	On
	On	On	X	X	X	On

X - No effect

Light Bars flash in Wig-Wag pattern when 'On', BlinkerSigns Flash when 'On'

Brightness Switch		Warning Light Brightness			
Activation Box 1	Activation Box 2	Blue Light Bars	Yellow Light Bars	Red Light Bars	HERO BlinkerSigns
Low	Low	Low	Low	Low	Low
Med	Low	Low	Low	Low	Low
High	Low	Low	Low	Low	Low
Low	Med	Low	Low	Low	Low
Med	Med	Med	Med	Med	Med
High	Med	Med	Med	Med	Med
Low	High	Low	Low	Low	Low
Med	High	Med	Med	Med	Med
High	High	High	High	High	High

To keep full control of the brightness of all warning signs at one station, keep the Brightness Switch on the other Activation Box on 'High'

TAPCO
TRAFFIC & PARKING CONTROL CO., INC.

Revised 10/19/2018 – MEH

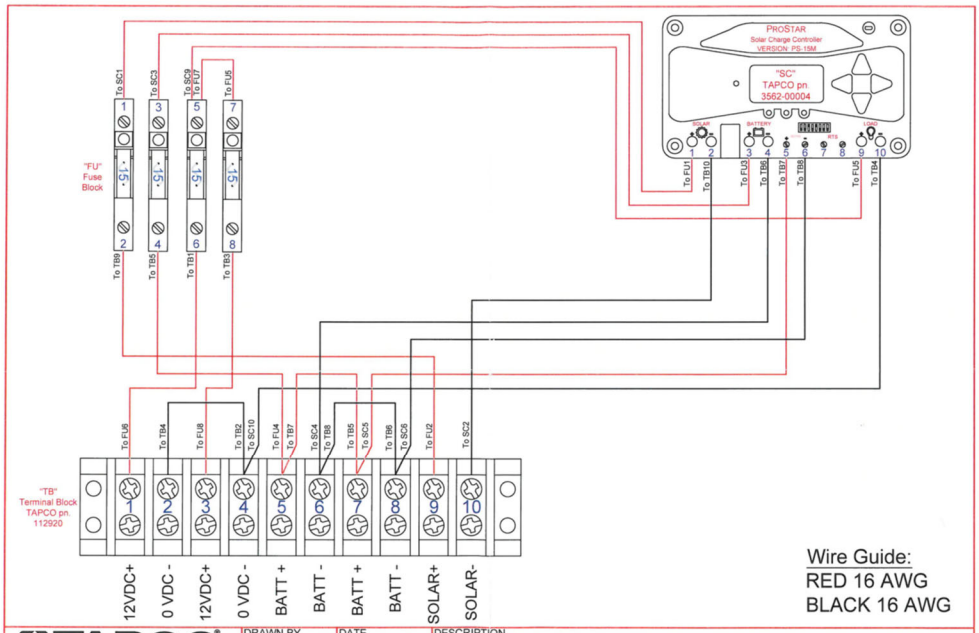

TAPCO TRAFFIC & PARKING CONTROL CO., INC.	DRAWN BY JHB	DATE 07/23/2018	DESCRIPTION PANEL, POWER SOURCE, 12V, PROSTAR, 120652, 6 BATTERY SOLAR PSU
5100 W. Brown Deer Road Brown Deer, WI 53223 800.236.0112	CHECKED BY VPJ	DATE 07/24/2018	BACKPLATE # 124882 — 400090 — REV A
	APPROVED BY SAG	DATE 07/24/2018	

This document and the information it discloses is the exclusive property of Traffic and Parking Control Company, Inc. ("TAPCO"). Any reproduction, distribution, or use of this drawing, in whole or in part, without the express consent of TAPCO is prohibited.

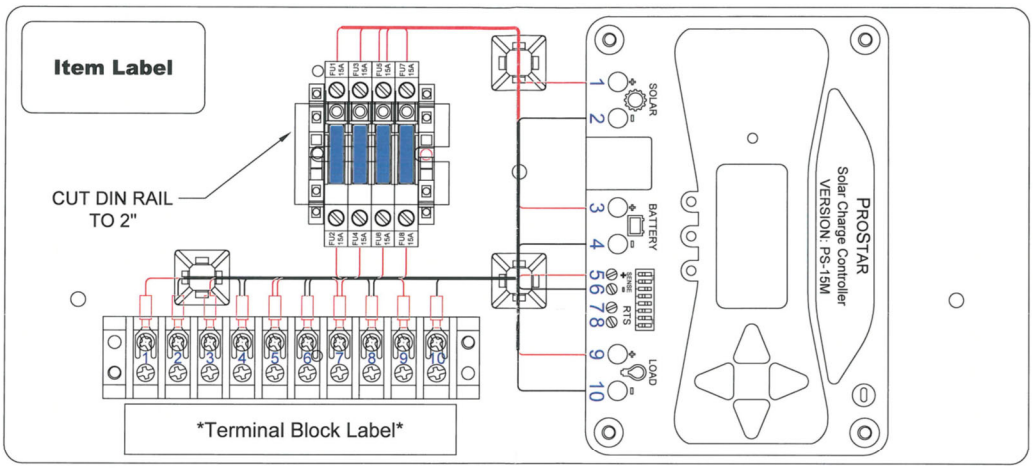

Note: ○ Indicates that an additional hole must be drilled for component mounting

TAPCO TRAFFIC & PARKING CONTROL CO., INC.	DRAWN BY JHB	DATE 07/23/2018	DESCRIPTION PANEL, POWER SOURCE, 12V, PROSTAR, 120652, 6 BATTERY SOLAR PSU
5100 W. Brown Deer Road Brown Deer, WI 53223 800.236.0112	CHECKED BY VPJ	DATE 07/24/2018	BACKPLATE # 124882
	APPROVED BY SAG	DATE 07/24/2018	400090 LAYOUT — REV A

This document and the information it discloses is the exclusive property of Traffic and Parking Control Company, Inc. ("TAPCO"). Any reproduction, distribution, or use of this drawing, in whole or in part, without the express consent of TAPCO is prohibited.

ATTACHMENT J-152000-42
COMMANDER'S CRITICAL INFORMATION REQUIREMENT (CCIR) NOTIFICATION

PUBLIC WORKS CCIRs

WHAT DO I KNOW? WHO NEEDS TO KNOW? HAVE I TOLD THEM?

URGENT: INITIATE TELEPHONE CALLS REGARDLESS OF TIME OF DAY. CONTINUE TO MAKE CALLS UNTIL VERBAL COMMUNICATIONS ARE MADE.

HIGH PRIORITY: PRIOR TO 2300 - TELEPHONE CALL
AFTER 2300 - TEXT WITH A TELEPHONE CALL THE NEXT MORNING NO LATER THAN 0700

PWO/DPWO APPROVAL: SUBMIT REQUEST 30 DAYS IN ADVANCE

CCIR	HANDLING	INFORM
1) Facility condition preventing unrestricted aircraft movement in or out of a hangar or airfield.	URGENT	FSCM / PWC
2) Condition impacting ATC (Bldg 1166) mission (Utilities, HVAC, unexpected power outages, etc.)	URGENT	FSCM / PWC
3) A catastrophic event or incident causing significant infrastructure damage, mass injury, restricted access, significant environmental impact.	URGENT	FSCM / PWC
4) Spills of Hazardous or potentially hazardous materials including AFFF discharges. (ASO 11010.5D)	URGENT	FSCM / PWC
5) Unscheduled utility outages (water, gas, power)	URGENT	FSCM / PWC
6) Interupptions to the fire loop, fire pumps or any requirement for MCAS units to post Fire Watches due to issues with Fire Alarm/Suppression Systems.	URGENT	FSCM / PWC
1) Storm damage reports/assessments.	HIGH PRIORITY	FSCM / PWC
2) Any airfield washrack capability reduction.	HIGH PRIORITY	PWC / FSCM
3) Any reports of sinkholes.	HIGH PRIORITY	PWC / FSCM
4) Any Level II Gate inoperable.	HIGH PRIORITY	PWC / FSCM
5) Any loss of tool air in aircraft maintenance facilities.	HIGH PRIORITY	PWC / FSCM

6) Major HVAC issues (to include Aircraft Cooling Units at JSF Hangars).	HIGH PRIORITY	PWC / FSCM
7) Pest infestations or rodents.	HIGH PRIORITY	FSCM
8) Any reports of mold.	HIGH PRIORITY	PWC / FSCM
9) Anytime a major HVAC system component is put in Maintenance Mode for any reason other than scheduled maintenance.	HIGH PRIORITY	Utility/Energy Manager
10) Emergency vehicles placed out of/back in service.	HIGH PRIORITY	BSVE Manager
1) Scheduled utility outages (water, gas, power).	PWO / DPWO Approval	PWC / FSCM
2) Major equipment canabilization.	PWO / DPWO Approval	PWC / FSCM
3) Any maintenance requiring traffic pattern changes (PMO must concur with plan).	PWO / DPWO Approval	PWC / FSCM
4) Any requests for information and/or data from USMC provided systems (i.e. MAXIMO).	PWO / DPWO Approval	FSCM
5) Any maintenance requiring a utility to be secured to Laurel Bay, barracks, or Temporary Lodging Facilities.	PWO / DPWO Approval	PWC / FSCM

MCAS BEAUFORT CCIRs

WHAT DO I KNOW? WHO NEEDS TO KNOW? HAVE I TOLD THEM?

URGENT: INITIATE TELEPHONE CALLS REGARDLESS OF TIME OF DAY. CONTINUE TO MAKE CALLS UNTIL VERBAL COMMUNICATIONS ARE MADE.

HIGH PRIORITY: PRIOR TO 2300 - TELEPHONE CALL
AFTER 2300 - TEXT WITH A TELEPHONE CALL THE NEXT MORNING NO LATER THAN 0700

CCIR	HANDLING	INFORM
1) An event or incident resulting in the death of military or civilian personnel. (SIR Required)	URGENT	PWO, DPWO, FEAD
2) Use of deadly force by PMO aboard MCAS Beaufort or Laurel Bay Military Housing. (SIR Required)	URGENT	PWO, DPWO, FEAD
3) A BLUE DART message (exercise or real world) or any act of terrorism or threat against U.S. interests that changes any Tricommand Installation Force Protection posture to Delta or is likely to require a response by/support of operational forces. (SIR Required)	URGENT	PWO, DPWO, FEAD
4) A catastrophic event or incident causing significant infrastructure damage, mass injury, restricted access, significant environmental impact, or requiring the commitment of Air Station personnel and resources to civil authorities. (SIR Required)	URGENT	PWO, DPWO, FEAD
5) A class "A", "B", or "C" aircraft mishap of Installation aircraft or class "A" of MAG aircraft. (SIR Required)	URGENT	PWO, DPWO, FEAD
6) An Unmanned Aircraft System (UAS) incursion within the MCAS Beaufort perimeter. (SIR Required)	URGENT	PWO, DPWO, FEAD
7) A racially, ethnically, or sexually motivated discriminatory event or incident that results in injury requiring hospitalization or adversely affects the equal opportunity climate of the Air Station.	HIGH PRIORITY	DPWO, FEAD, FSCM
8) A significant degradation or loss of Air Station network connectivity or communications.	HIGH PRIORITY	DPWO, FEAD, FSCM
9) An actual or presumptive diagnosis of any disease with potential epidemic significance that may require quarantine or may degrade the operational readiness of MCAS Beaufort.	HIGH PRIORITY	DPWO, FEAD, FSCM
10) Any event or incident that results in $20,000 to $200,000 in property damage or non-fatal injuries reulting in: permanent partial disability, hospitalization of multiple individuals, or injuries resulting in lost time outside of the shift it occurred. This applies to injuries to military, civilian, and contract employees.	HIGH PRIORITY	DPWO, FEAD, FSCM