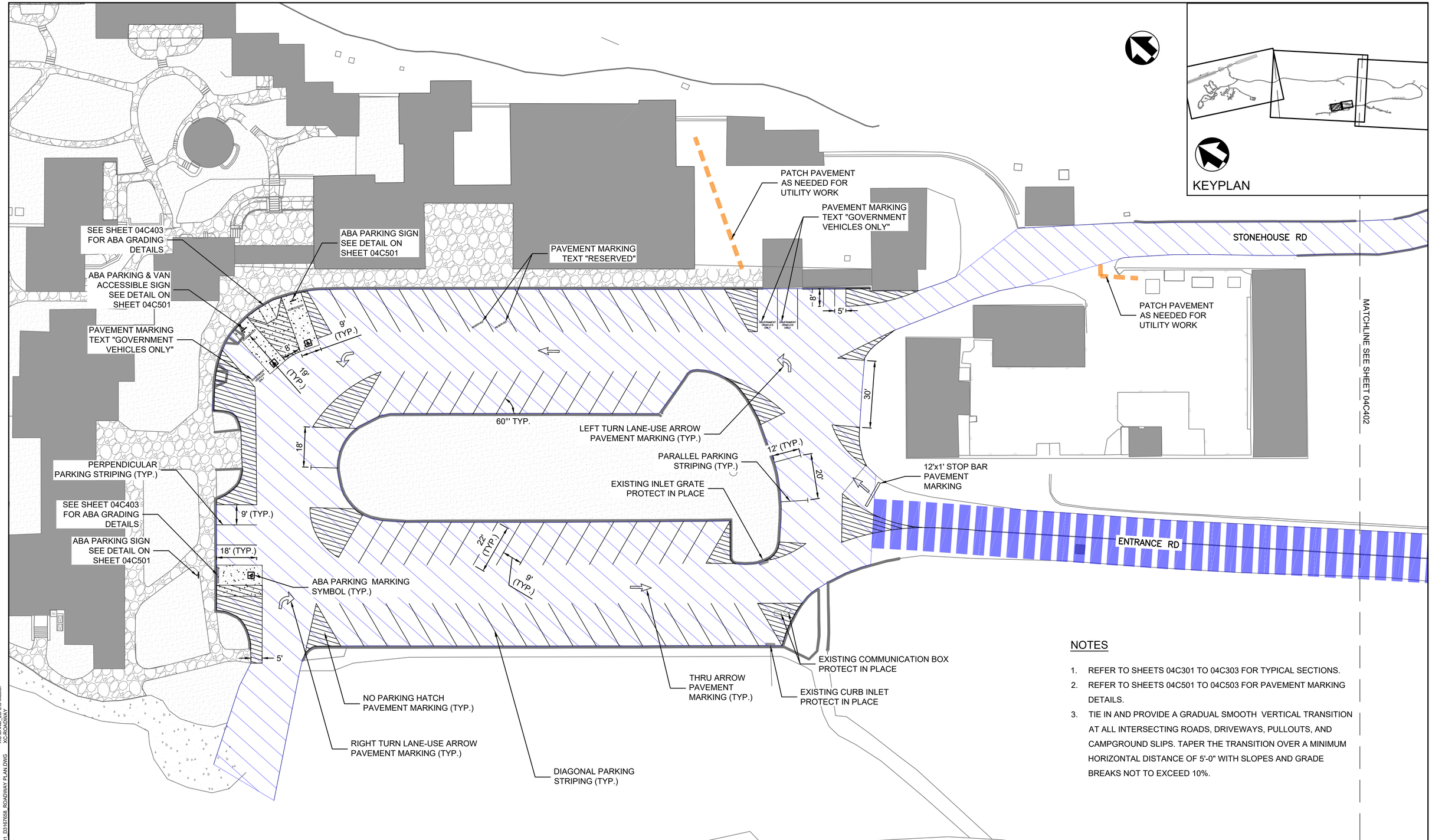

NOTES

1. REFER TO SHEETS 04C301 TO 04C303 FOR TYPICAL SECTIONS.
2. REFER TO SHEETS 04C501 TO 04C503 FOR PAVEMENT MARKING DETAILS.
3. TIE IN AND PROVIDE A GRADUAL SMOOTH VERTICAL TRANSITION AT ALL INTERSECTING ROADS, DRIVEWAYS, PULLOUTS, AND CAMPGROUND SLIPS. TAPER THE TRANSITION OVER A MINIMUM HORIZONTAL DISTANCE OF 5'-0" WITH SLOPES AND GRADE BREAKS NOT TO EXCEED 10%.

LEGEND

- CONCRETE PAVEMENT
- REMOVE & REPLACE
- REMOVE & REPLACE
- TRENCH PATCHING

FULL SIZE DRAWINGS = 22"x34" 0" 1"
BAR MEASURES 1" LONG

20 0 20 40
SCALE OF FEET

JAMES MILLS NEW MEXICO 29711 PROFESSIONAL ENGINEER

James Mills
2025.04.11
10:53:51 -06'00'

DESIGNED: C. MEYER	SUB SHEET NO.	TITLE OF SHEET	DRAWING NO.
CADD C. MEYER	04C401	CIVIL VISITOR CENTER SITE PLAN	315
TECH. REVIEW: J. MILLS			182751
DATE: 04/11/2025		BANDELIER NATIONAL MONUMENT	PMIS/PKG NO. 266697
			SHEET 150 OF 203

XG-Border_BAND
XC-LAYOUT-SHEETS
XC-BAND PROFILES
XC-BAND_2D-EG-Master
XC-ROADWAY
3/25/2025 4:36 PM MARQUEA R24 04C401 D3167558 ROADWAY PLAN.DWG

NOTES

1. REFER TO SHEETS 04C301 TO 04C303 FOR TYPICAL SECTIONS.
2. REFER TO SHEETS 04C501 TO 04C503 FOR PAVEMENT MARKING DETAILS.
3. TIE IN AND PROVIDE A GRADUAL SMOOTH VERTICAL TRANSITION AT ALL INTERSECTING ROADS, DRIVEWAYS, PULLOUTS, AND CAMPGROUND SLIPS. TAPER THE TRANSITION OVER A MINIMUM HORIZONTAL DISTANCE OF 5'-0" WITH SLOPES AND GRADE BREAKS NOT TO EXCEED 10%.
4. RAISE ALL EXISTING EXISTING MANHOLE LIDS, AND VALVE COVERS TO MATCH THE FINISH GRADE OF THE NEW ASPHALT PAVEMENT SURFACE UNLESS THEY ARE TO BE ABANDONED AND/OR REMOVED AS PER THE UTILITY PLANS.

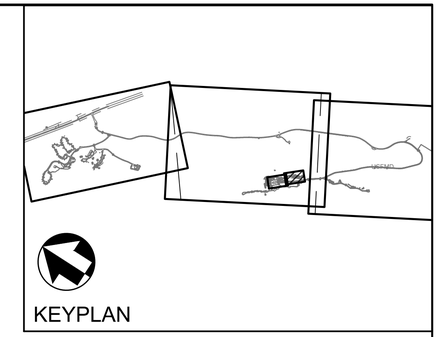

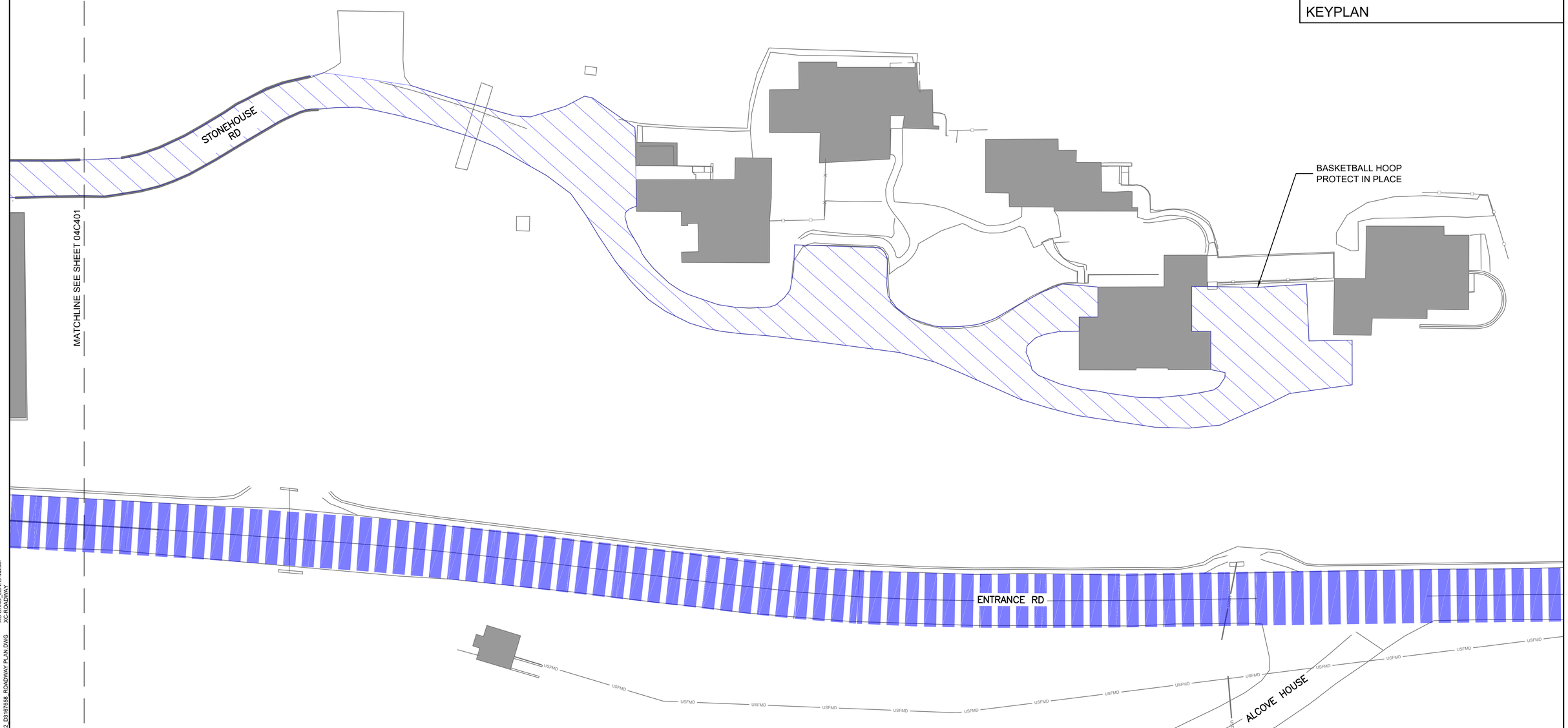

LEGEND

REMOVE & REPLACE

REMOVE & REPLACE

FULL SIZE DRAWINGS = 22"x34" 0" 1"
BAR MEASURES 1" LONG

20 0 20 40
SCALE OF FEET

JAMES MILLS NEW MEXICO 29711 PROFESSIONAL ENGINEER

James Mills
2025.04.11
10:55:16-06'00'

DESIGNED: C. MEYER	SUB SHEET NO.	TITLE OF SHEET	DRAWING NO.
CADD C. MEYER	04C402	CIVIL VISITOR CENTER SITE PLAN	315 / 182751
TECH. REVIEW: J. MILLS			PMIS/PKG NO. 266697
DATE: 04/11/2025		BANDELIER NATIONAL MONUMENT	SHEET 151 OF 203

3/24/2025 2:56 PM MARQUEA R24 04C402 D3167658 ROADWAY PLAN.DWG
XC-Border_BAND
XC-LAYOUT-SHEETS
XC-BAND PROFILES
XC-BAND_2D-EG-Master
XC-ROADWAY

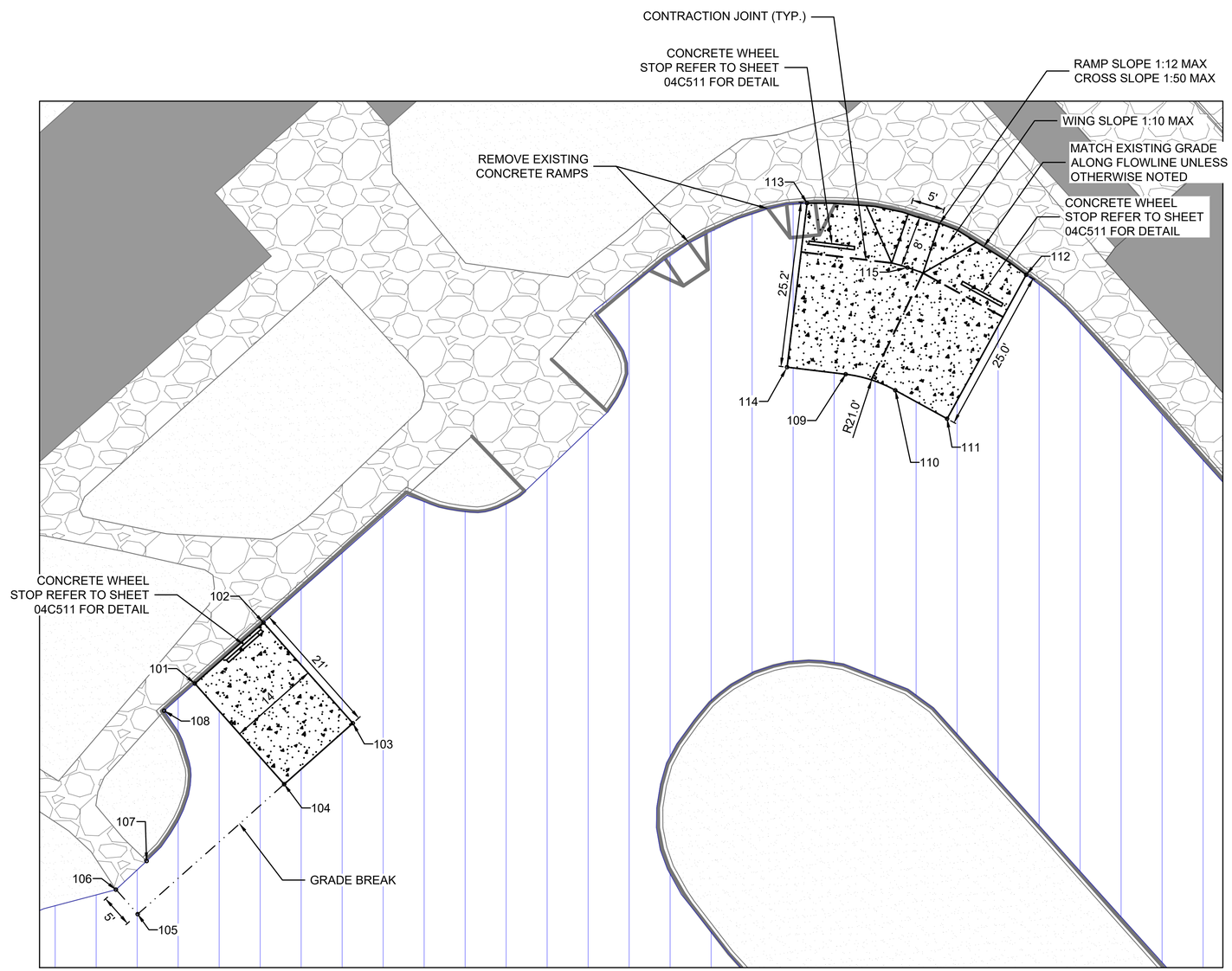

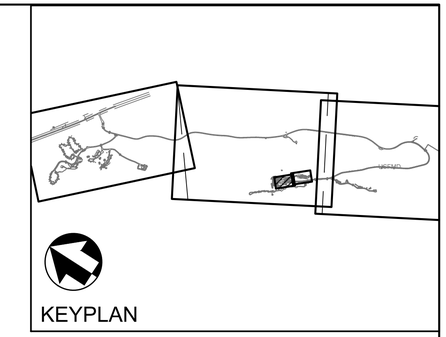

POINT TABLE				
POINT #	NORTHING	EASTING	ELEVATION	DESCRIPTION
101	1738765.398	1634227.547	6067.11	FL, CONCRETE
102	1738774.693	1634238.016	6067.32	FL, CONCRETE
103	1738759.355	1634251.635	6067.11	CONCRETE
104	1738750.060	1634241.167	6066.90	CONCRETE
105	1738730.239	1634218.846	6065.55	PG, GRADE BREAK
106	1738733.978	1634215.525	6065.46	FL, MATCH EXISTING
107	1738738.336	1634220.205	6065.81	FL, MATCH EXISTING
108	1738761.247	1634222.873	6066.84	FL
109	1738812.559	1634326.767	6072.28	PC, CONCRETE
110	1738810.119	1634334.335	6072.33	PT, CONCRETE
111	1738805.785	1634342.223	6072.39	CONCRETE
112	1738827.734	1634354.281	6072.83	FL, CONCRETE
113	1738838.637	1634320.882	6072.65	FL, CONCRETE
114	1738813.649	1634317.833	6072.21	CONCRETE
115	1738828.832	1634336.191	6072.61	RAMP

LEGEND

- CONCRETE PAVEMENT
- REMOVE & REPLACE
- CONTRACTION JOINT

FULL SIZE DRAWINGS = 22"x34" 0" 1"
BAR MEASURES 1" LONG

10 0 10 20
SCALE OF FEET

JAMES MILLS NEW MEXICO 29711 PROFESSIONAL ENGINEER
James Mills
2025.04.11
10:56:49-06'00'

DESIGNED: C. MEYER	SUB SHEET NO.	TITLE OF SHEET	DRAWING NO.
CADD C. MEYER	04C403	CIVIL VISITOR CENTER ABA GRADING	315
TECH. REVIEW: J. MILLS			182751
DATE: 04/11/2025		BANDELIER NATIONAL MONUMENT	PMIS/PKG NO. 266697
			SHEET 152 OF 203

XG-Border BAND
XC-LAYOUT-SHEETS
XC-BAND PROFILES
XC-BAND_ZDEG-Master
XC-ROADWAY
3/24/2025 3:39 PM MARQUEA R24 04C403_D3167658_ROADWAY PLAN.DWG

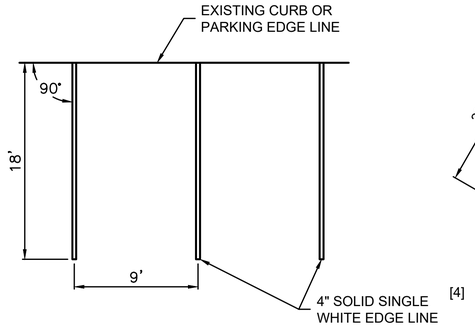

HEAD-ON PARKING STRIPING

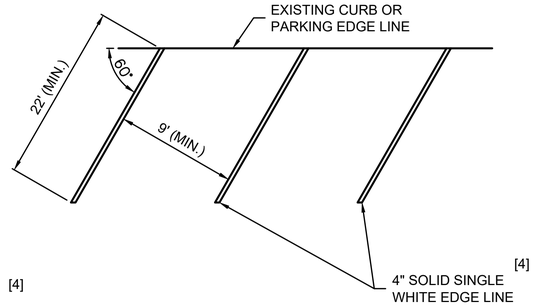

DIAGONAL PARKING STRIPING

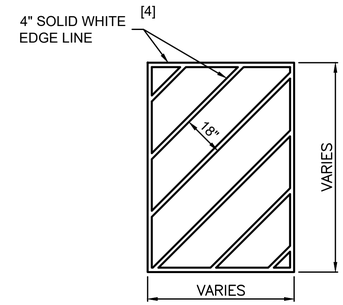

NO PARKING HATCH (NON ADA/ABA ACCESS AISLE

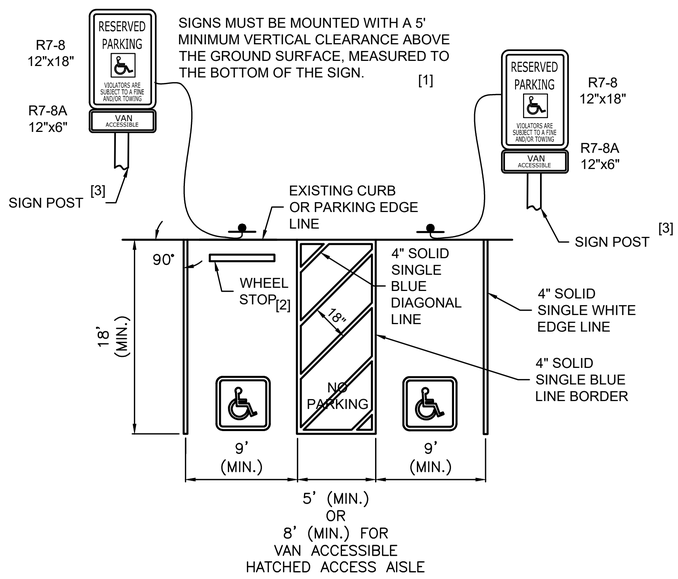

CAR AND VAN ACCESSIBLE SPACE
HEAD-ON PARKING
WITH HATCHED ACCESS AISLE

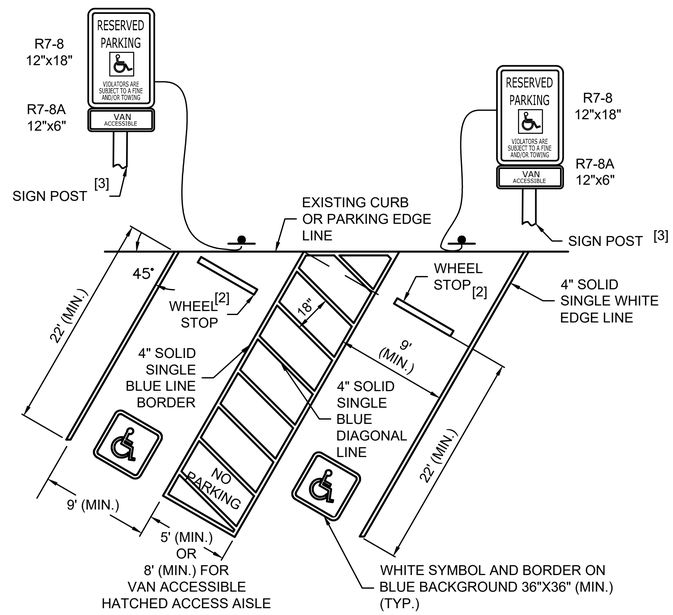

CAR AND VAN ACCESSIBLE SPACE
DIAGONAL PARKING
WITH HATCHED ACCESS AISLE

NOTES:

1. PROVIDE STRIPING IN ACCORDANCE WITH THE MANUAL ON UNIFORM TRAFFIC CONTROL DEVICES (MUTCD) LATEST EDITION.
2. PROVIDE LETTERS, NUMERALS, AND SYMBOLS THAT CONFORM WITH THE "STANDARD HIGHWAY SIGNS", LATEST EDITION.
3. DIMENSIONS SHOWN ARE FOR INFORMATIONAL PURPOSES ONLY. SEE PLANS FOR PAVEMENT MARKING CONFIGURATIONS, SYMBOLS AND WORDS, OR AS DIRECTED BY THE CO.
4. USE BLUE EDGE LINES ON CONCRETE SURFACES FOR ACCESSIBLE SPACES.
5. DIMENSIONS ARE TO CENTER-LINE OF STRIPE.
6. "NO PARKING" WHITE LETTERS A MINIMUM OF 12" HIGH.

FOOTNOTE:

[1] PROVIDE SIGNS MATCHING PARKING DETAILS WHEN SPECIFIED IN THE QUANTITY TABULATION. MOUNT SIGNS WITH A 5'-0" MINIMUM VERTICAL CLEARANCE ABOVE THE GROUND SURFACE MEASURED TO THE BOTTOM OF THE SIGN.

[2] WHEEL STOP IF REQUIRED TO PREVENT ENCROACHMENT OF VEHICLE OVER THE REQUIRED WIDTH OF WALKWAY.

[3] INSTALL 4"X4" WOOD POSTS.

[4] USE ONLY 4" TYPE B SOLID WHITE EDGE LINES ON ASPHALT PAVEMENT AND YELLOW LINES ON CONCRETE PAVEMENT UNLESS OTHERWISE NOTED.

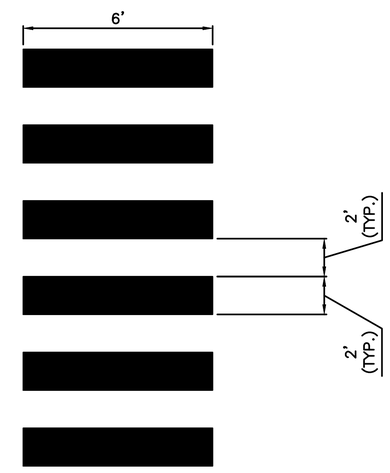

B CROSSWALK DETAIL
NO SCALE

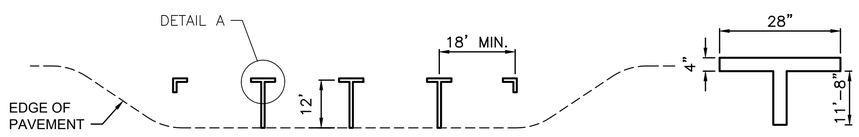

PARALLEL PARKING STRIPING

DETAIL A

A PARKING LOT STRIPING
NO SCALE

FULL SIZE DRAWINGS = 22"x34" 0" 1"
BAR MEASURES 1" LONG

JAMES MILLS NEW MEXICO 29711 PROFESSIONAL ENGINEER
James Mills
2025.04.11
10:58:13-06'00'

DESIGNED: C. MEYER	SUB SHEET NO.	TITLE OF SHEET CIVIL PAVEMENT MARKING DETAILS 1 OF 3	DRAWING NO. 315 182751
CADD C. MEYER	04C501		PMIS/PKG NO. 266697
TECH. REVIEW: J. MILLS		BANDELIER NATIONAL MONUMENT	SHEET 153 OF 203
DATE: 04/11/2025			

XG-Border_BAND
XC-BAND_20-EG-Master
XC-PLAN-DWG
3/24/2025 3:43 PM MARQUEA R24 04C501 D3187658 ROADWAY DETAILS.DWG

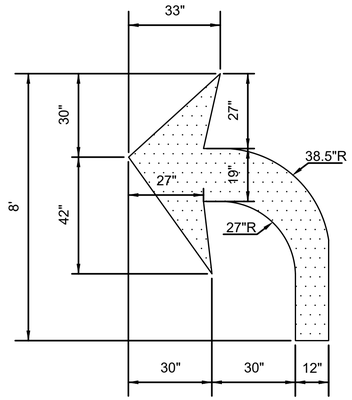

TURN LANE-USE ARROW

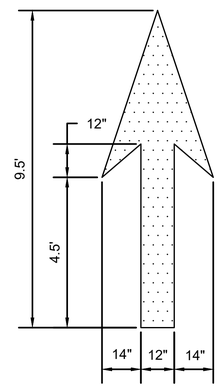

THROUGH
LANE-USE ARROW

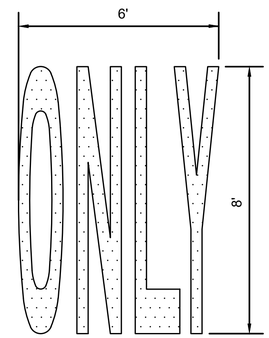

"ONLY" WORD MARKING

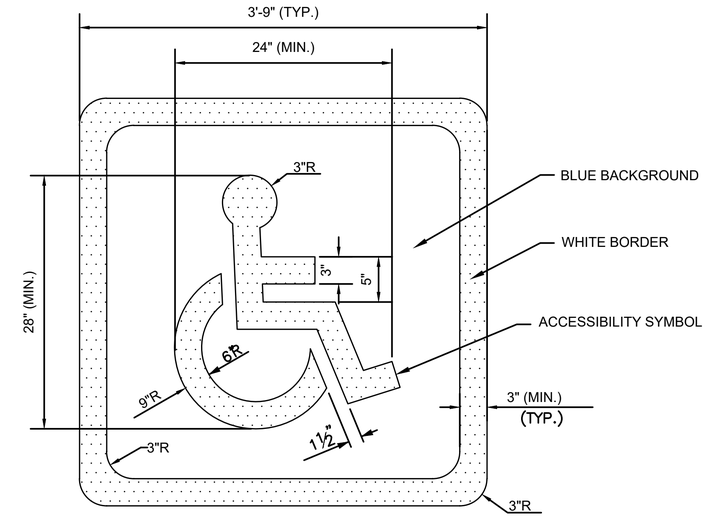

ACCESSIBILITY SYMBOL

A PAVEMENT MARKING SYMBOL DETAILS

NO SCALE

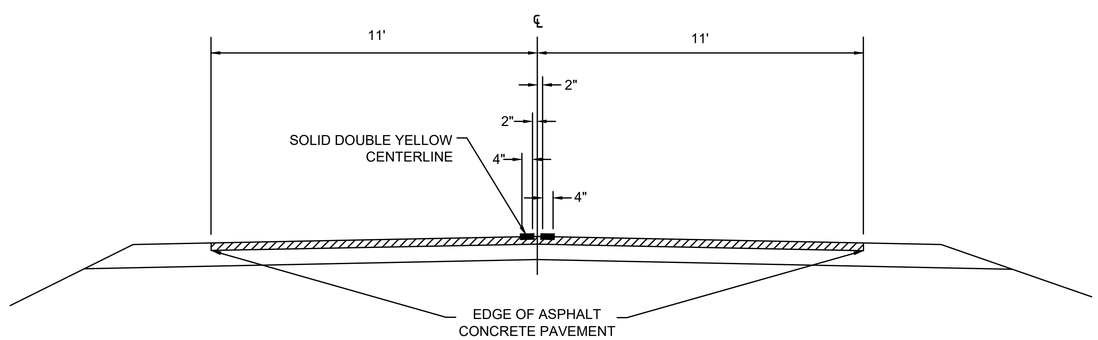

B PAVEMENT MARKING DETAIL

NO SCALE

PAVEMENT MARKING AREAS	
TYPE	SQFT
TURN LANE-USE ARROW	16
THROUGH LANE-USE ARROW	12
"ONLY" WORD MARKING	21
ACCESSIBILITY SYMBOL	5

NOTES:

1. PLACE PAVEMENT WORD AND SYMBOL MARKINGS IN ACCORDANCE WITH THE "MANUAL ON UNIFORM TRAFFIC CONTROL DEVICES" (MUTCD), CURRENT EDITION.
2. ALL LETTERS, NUMERALS AND SYMBOLS SHALL CONFORM WITH THE "STANDARD HIGHWAY SIGNS", CURRENT EDITION.
3. USE STENCILS MATCHING EXISTING STALL TEXT MARKINGS, WITH 12" HIGH LETTERING, INCLUDING "GOVERNMENT VEHICLES", "NO PARKING", "RESERVED" AND ANY OTHER TEXT NOTED IN THE PLANS.

FULL SIZE DRAWINGS = 22"x34" 0" 1"
BAR MEASURES 1" LONG

JAMES MILLS NEW MEXICO 29711 PROFESSIONAL ENGINEER

James Mills
2025.04.11
10:59:27-06'00'

DESIGNED: C. MEYER	SUB SHEET NO.	TITLE OF SHEET	DRAWING NO.
CADD C. MEYER	04C502	CIVIL PAVEMENT MARKING DETAILS 2 OF 3	315 182751
TECH. REVIEW: J. MILLS			PMIS/PKG NO. 266697
DATE: 04/11/2025		BANDELIER NATIONAL MONUMENT	SHEET 154 OF 203

XG-Border_BAND
XC-BAND_20-EG-Master
3/24/2025 3:45 PM MARQUEA R24 04C502 D3187658 ROADWAY DETAILS.DWG XC-ROADWAY

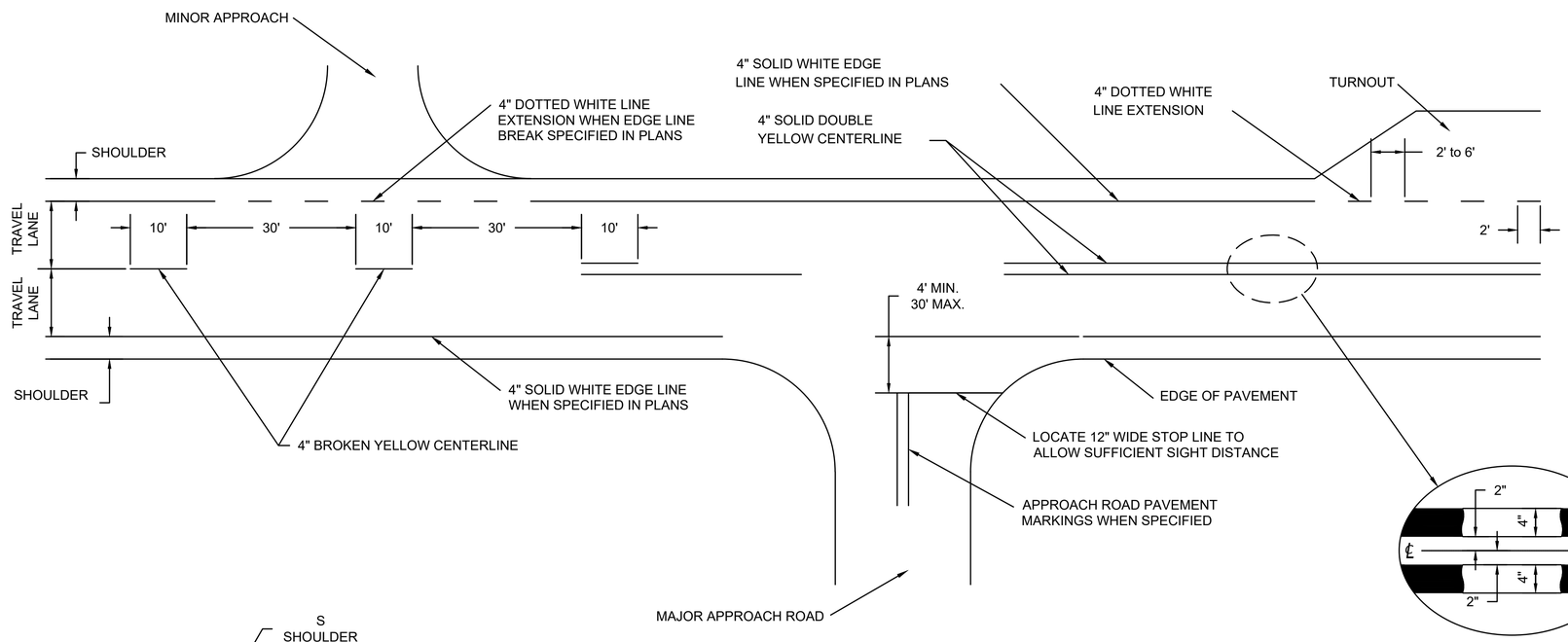

TYPICAL PAVEMENT MARKING APPLICATIONS

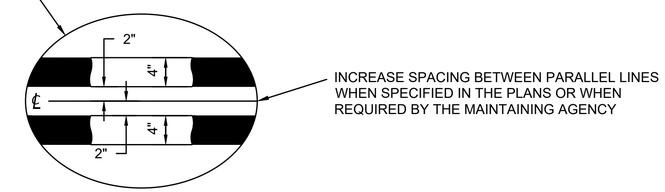

CENTERLINE DETAIL

NOTES:

1. PLACE EDGE LINE PAVEMENT MARKINGS AT ASPHALT/CONCRETE CURB INTERFACE WHEN CURB IS PRESENT.
2. PAINT CENTERLINE PAVEMENT MARKINGS ON CURVES WITH CURVE WIDENING "W" TO ACHIEVE EQUAL LANE WIDTHS WITHIN THE ROADWAY. MAINTAIN A CONSTANT SHOULDER WIDTH "S" THROUGHOUT THE CURVE WIDENING AREA.
3. TYPICAL PAVEMENT MARKING WIDTHS ARE SHOWN. USE WIDER PAVEMENT MARKINGS WHEN SPECIFIED ON THE PLANS OR WHEN REQUIRED BY THE MAINTAINING AGENCY.

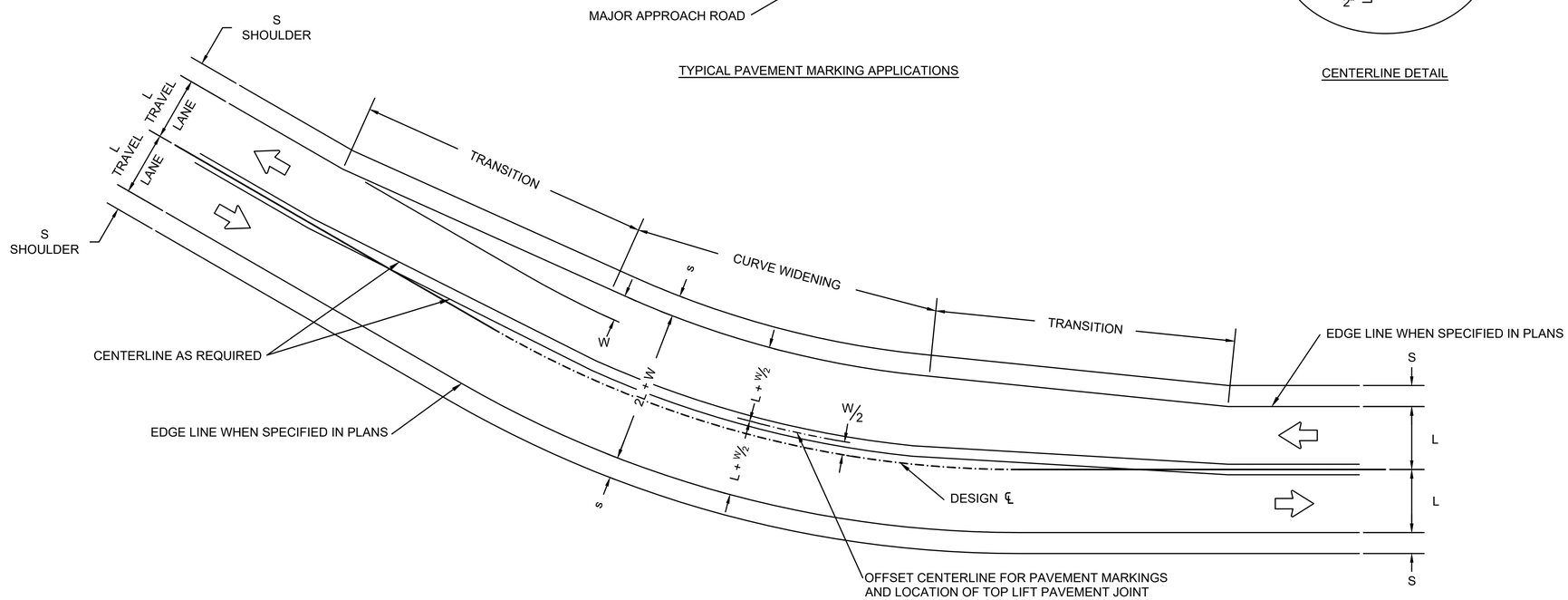

CENTERLINE MODIFICATION FOR CURVES WITH WIDENING APPLIED ON INSIDE

SEE NOTE 2 FOR TREATMENT OF CURVES WHEN WIDENING "W" IS SPLIT EQUALLY ON BOTH SIDES OF CENTERLINE

A PAVEMENT MARKING DETAILS

NO SCALE

FULL SIZE DRAWINGS = 22"x34" 0" 1"
BAR MEASURES 1" LONG

JAMES MILLS NEW MEXICO 29711 PROFESSIONAL ENGINEER

James Mills
2025.04.14
11:00:47-06'00'

DESIGNED: C. MEYER	SUB SHEET NO.	TITLE OF SHEET CIVIL PAVEMENT MARKING DETAILS 3 OF 3	DRAWING NO. 315 182751
CADD C. MEYER	04C503		PMIS/PKG NO. 266697
TECH. REVIEW: J. MILLS			SHEET 155 OF 203
DATE: 04/11/2025		BANDELIER NATIONAL MONUMENT	

XG-Border_BAND
XC-BAND_2D-EG-Master
XC-ROADWAY

3/24/2025 3:47 PM MARQUEA R24 04C503_D3167658_ROADWAY DETAILS.DWG XC-ROADWAY

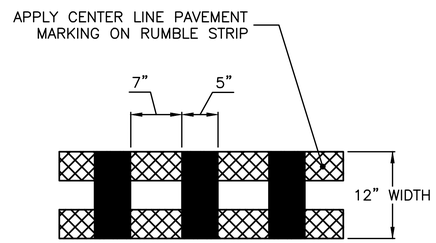

B RUMBLE STRIP DETAIL

NO SCALE

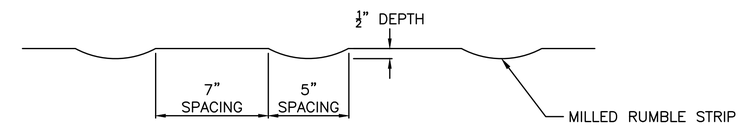

SECTION A–A

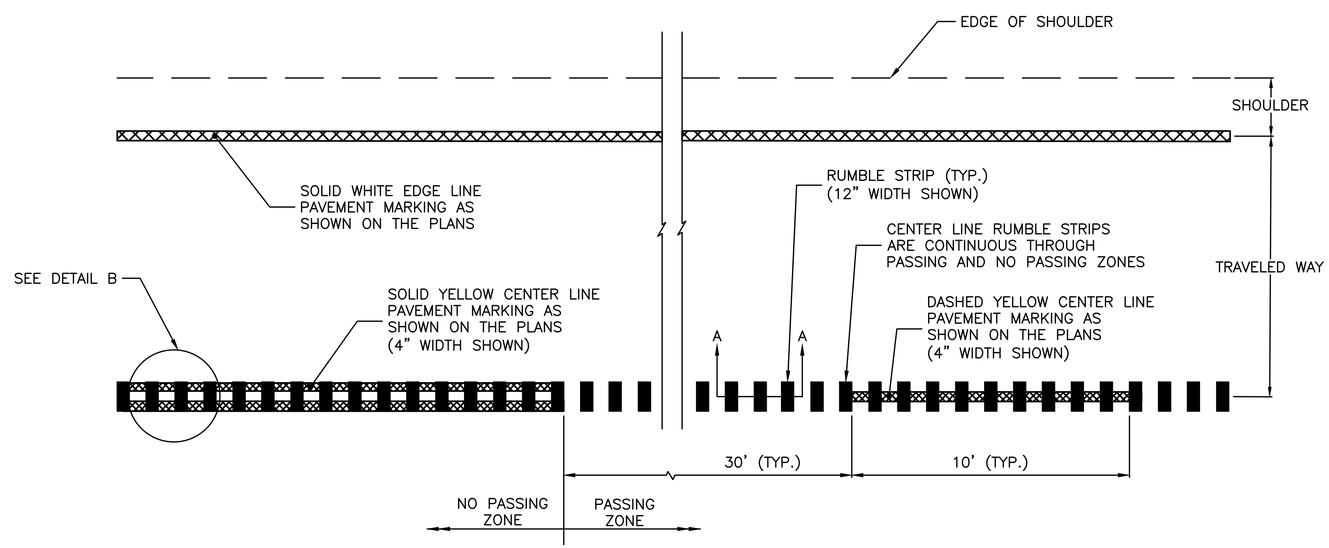

A CENTERLINE RUMBLE STRIP

NO SCALE

FULL SIZE DRAWINGS = 22"x34" 0" 1"
BAR MEASURES 1" LONG

JAMES MILLS NEW MEXICO 29711 PROFESSIONAL ENGINEER

James Mills
2025.04.11
11:02:13-06'00'

DESIGNED: C. MEYER	SUB SHEET NO.	TITLE OF SHEET CIVIL RUMBLE STRIP DETAILS	DRAWING NO. 315 182751
CADD C. MEYER	04C504		PMIS/PKG NO. 266697
TECH. REVIEW: J. MILLS			SHEET 156 OF 203
DATE: 04/11/2025		BANDELIER NATIONAL MONUMENT	

XG-Border_BAND
XC-BAND_ZD-EG-Master
XC-FRONDNA1
3/24/2025 3:49 PM MARQUEA, R24 04C504_D3167658_ROADWAY DETAILS.DWG

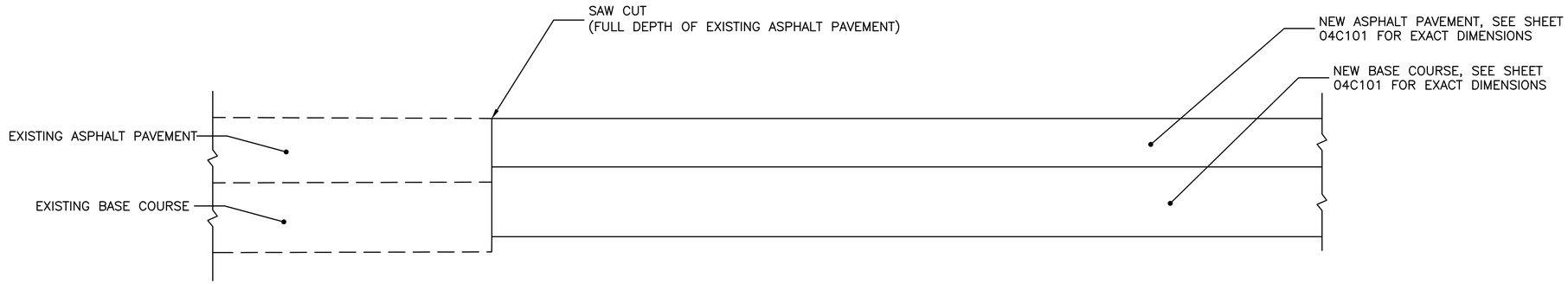

NEW PAVEMENT

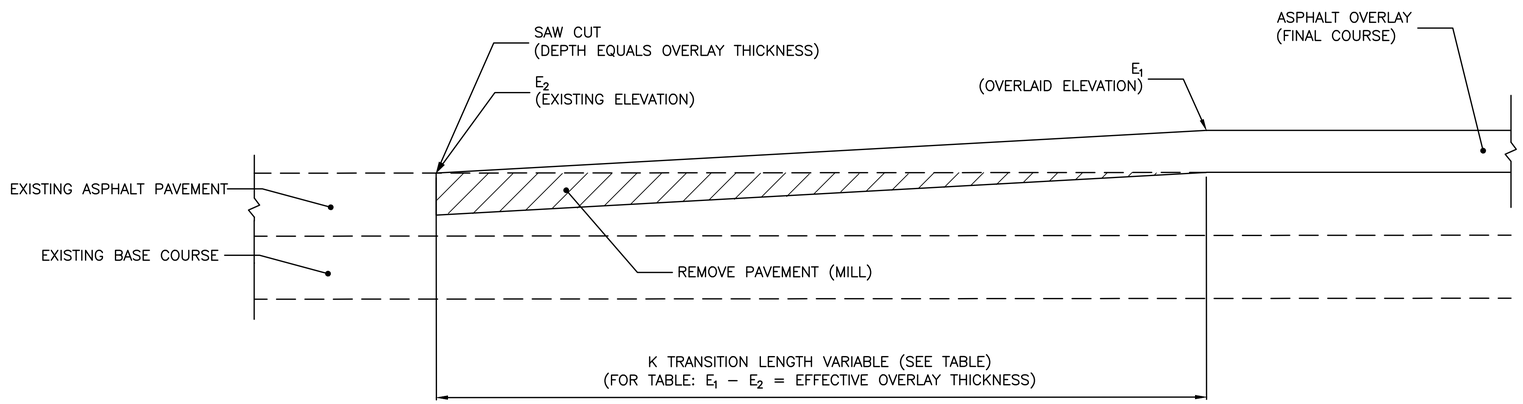

OVERLAY

NOTES:

1. PROVIDE A TRANSITION LENGTH IN FEET THAT IS NOT LESS THAN THE VALUE OBTAINED BY MULTIPLYING THE EFFECTIVE OVERLAY THICKNESS IN INCHES (DIFFERENCE BETWEEN THE EXISTING AND OVERLAID ELEVATIONS) BY THE K VALUE FROM THE TABLE FOR THE POSTED SPEED OF THE ROADWAY.
2. USE $K*[E_1-E_2]=T$, OR $K*[D_1-D_2]=T$ (WHICHEVER APPLIES), TO OBTAIN THE TRANSITION LENGTH. (MINIMUM TRANSITION LENGTH=30 FEET).
3. EXAMPLE: IF THE POSTED SPEED IS 55 MPH, EFFECTIVE OVERLAY THICKNESS = 2 INCHES. THEN THE MINIMUM TRANSITION LENGTH = 2 INCHES X 42.5 FT./IN. = 85 FEET.

K VALUE TABLE (FT/IN)		
POSTED SPEED (MPH)*	30	35
K	30	32.5

* USE A K VALUE OF 30 FOR SPEEDS LESS THAN 30 MPH. AT DRIVEWAYS, PULLOUTS, AND CAMPGROUND SLIPS TAPER THE TRANSITION OVER A MINIMUM OF 5' HORIZONTALLY WITH SLOPES AND GRADE BREAKS NOT TO EXCEED AT 10%.

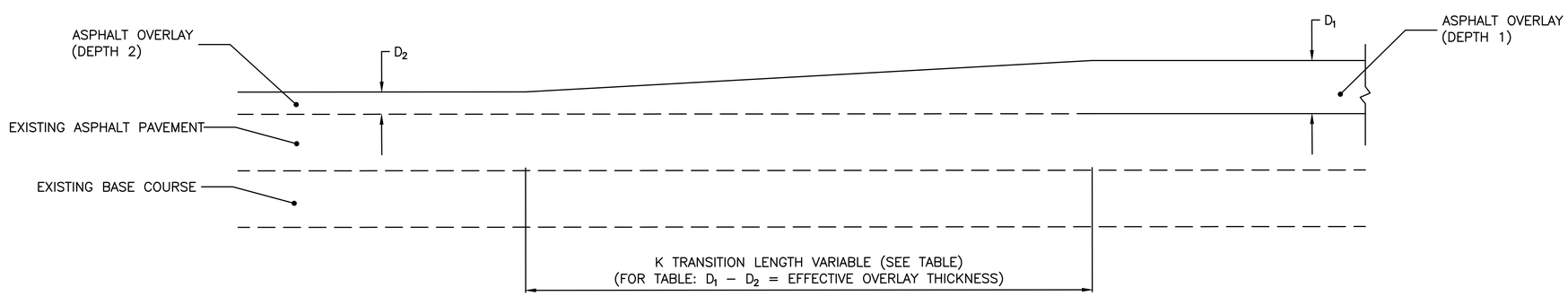

OVERLAY – DEPTH TRANSITIONS

A PAVEMENT TRANSITION DETAILS
NO SCALE

FULL SIZE DRAWINGS = 22"x34" 0" 1"
BAR MEASURES 1" LONG

JAMES MILLS NEW MEXICO 29711 PROFESSIONAL ENGINEER
James Mills
2025.04.11
11:03:36-06'00'

DESIGNED: C. MEYER	SUB SHEET NO.	TITLE OF SHEET	DRAWING NO.
CADD C. MEYER	04C505	CIVIL PAVEMENT TRANSITION DETAILS	315 / 182751
TECH. REVIEW: J. MILLS			PMIS/PKG NO. 266697
DATE: 04/11/2025		BANDELIER NATIONAL MONUMENT	SHEET 157 OF 203

XG-Border_BAND
XC-BAND_2D-EG-Master
3/24/2025 3:52 PM MARQUEA R24 04C505_D3167658_ROADWAY DETAILS.DWG XC-ROADWAY

SIGN SPACING TABLE			
ROAD TYPE	DISTANCE BETWEEN SIGNS IN FEET		
	A	B	C
URBAN AND RURAL 30 MPH AND LESS	100	100	100
URBAN AND RURAL 35 MPH TO 50 MPH	350	350	350
RURAL GREATER THAN 50 MPH	500	500	500
EXPRESSWAY / FREEWAY	1000	1500	2640

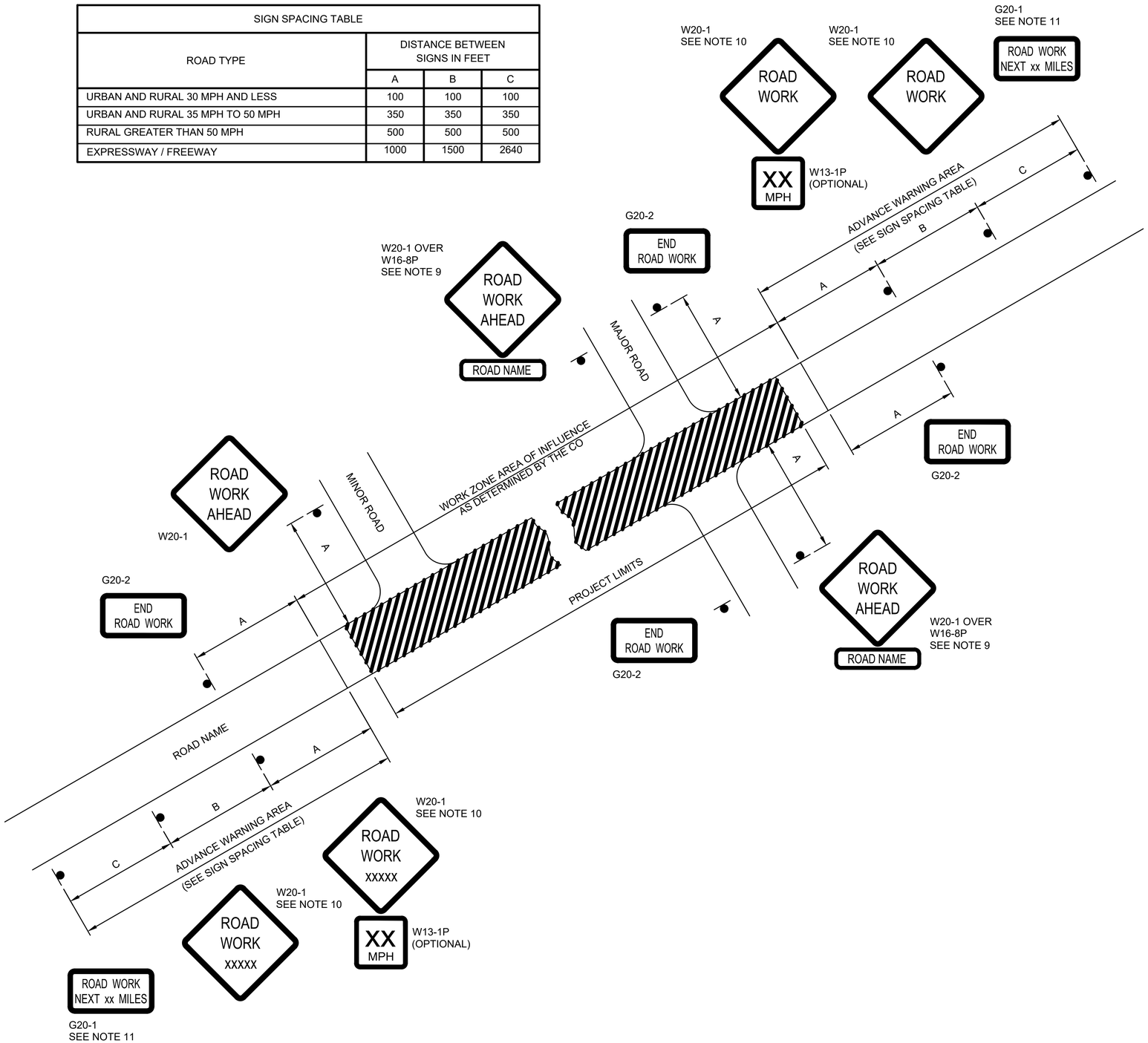

NOTES:

1. ERECT ALL PROJECT ADVANCE WARNING SIGNS BEFORE STARTING CONSTRUCTION WORK.
2. NOT ALL DETAILS SHOWN ON THE TEMPORARY TRAFFIC CONTROL SHEETS MAY BE APPLICABLE TO THIS PROJECT. THE CONTRACTOR MAY ADD OR DELETE INFORMATION AND DETAILS IN THIS TRAFFIC CONTROL PLAN AS NECESSARY TO ACCOMMODATE ACTUAL OPERATIONS.
3. WHERE ADVANCE WARNING SIGNS, PLACED AS SHOWN, INTERFERE WITH PERMANENT SIGNS, LOCATE THE WARNING SIGNS AS DETERMINED BY THE CO FOR BEST RESULTS. VARY MESSAGES AS REQUIRED.
4. ADDITIONAL OR DIFFERENT MESSAGE SIGNS MAY BE REQUIRED TO FIT THE ACTUAL CONSTRUCTION CONDITIONS.
5. INSTALL ADVISORY SPEED PLATES UNDER THE W20 SERIES WARNING SIGNS AS NEEDED TO INDICATE A MAXIMUM RECOMMENDED SPEED THROUGH THE CONSTRUCTION AREA.
6. ENSURE ALL SIGN SUPPORTS EXPOSED TO IMPACT BY TRAFFIC MEET THE REQUIREMENTS OF NCHRP-350 OR MASH FOR CRASHWORTHINESS.
7. MAINTAIN TWO-WAY TRAFFIC DURING ALL NON-WORK HOURS EXCEPT AS APPROVED BY THE CO.
8. DO NOT STORE TRAFFIC CONTROL DEVICES ALONG THE ROADWAY WHEN NOT IN USE. COVER POST-MOUNTED SIGNS WHEN NOT APPLICABLE.
9. IF W20-1 IS PLACED ON A ROADWAY OTHER THAN THAT ON WHICH THE ACTUAL CONSTRUCTION WORK OCCURS, INCLUDE A SUPPLEMENTARY PLAQUE INDICATING THE NAME OF THE ROAD ON WHICH THE CONSTRUCTION DOES OCCUR (APPLIES TO MAJOR ROADS ONLY).
10. THE MESSAGE ON THE W20-1 SIGNS MAY BE "ROAD WORK AHEAD" OR MAY SPECIFY THE DISTANCE TO THE WORK AREA IN FEET OR IN MILES. INSTALL AN ADDITIONAL W20-1 SIGN WHEN APPROACH SPEEDS EXCEED 50 MPH. WHEN USED PLACE THE TWO W20-1 SIGNS "B" FEET APART ACCORDING TO THE SIGN SPACING TABLE.
11. FOR WORK ZONES THAT ARE 2 MILES OR MORE IN LENGTH, INSTALL G20-1 SIGNS AT EACH END OF THE PROJECT. SHOW THE DISTANCE ON THE G20-1 SIGN TO THE NEAREST WHOLE MILE.
12. IF SIGNING ON A ROADWAY UNDER A JURISDICTION OTHER THAN THE CLIENT AGENCY, VERIFY THAT AN ENCROACHMENT PERMIT HAS BEEN OBTAINED.
13. STATE STANDARDS MAY BE USED AS AN ALTERNATIVE IF APPROVED BY THE CO.
14. REFER TO SPECIFICATIONS FOR ALLOWABLE RETROREFLECTIVE SHEETING TYPES.

FULL SIZE DRAWINGS = 22"x34" 0" 1"
BAR MEASURES 1" LONG

JAMES MILLS NEW MEXICO 29711 PROFESSIONAL ENGINEER
James Mills
2025.04.11
11:13:33 -06'00'

DESIGNED: C. MEYER	SUB SHEET NO.	TITLE OF SHEET CIVIL TEMPORARY TRAFFIC COONTROL DETAILS	DRAWING NO. 315
CADD C. MEYER	04C506		182751
TECH. REVIEW: J. MILLS			PMIS/PKG NO. 266697
DATE: 04/11/2025		BANDELIER NATIONAL MONUMENT	SHEET 158 OF 203

XG-Border_BAND
XC-BAND_ZB-EG-Master
XC-ROADWAY
3/24/2025 3:54 PM MARQUEA, R24 04C506_D3167658_ROADWAY DETAILS.DWG

COUPLING BANDS FOR METAL PIPE CULVERT [1]					
CORRUGATION SIZE [2] INCHES	ROUND PIPE DIAMETER INCHES	ELLIPTICAL PIPE SPAN × RISE INCHES	MINIMUM BAND WIDTH (INCHES)		
			ANNULAR CORRUGATED BANDS [3]	HELICALLY CORRUGATED BANDS [4]	SEMI–CORRUGATED BANDS [5]
1½ × ¼	UNDERDRAIN [6]	–	10.5	7	10.5
2⅔ × ½	12 to 36	17 × 13 to 42 × 29	7	12	
	42 to 72	49 × 33 to 83 × 57	10.5	12	
	78 to 84	–	10.5	12	10.5
3 ? 1	36 to 72	60 × 46 to 81 × 59	12	14	10.5
	78 to 144	87 × 64 to 142 × 91	12	14	10.5
5 ? 1	36 to 72	60 × 46 to 81 × 59	20	22	
	78 to 144	87 × 64 to 142 × 91	20	22	

[1] FABRICATE ANNULAR, HELICAL AND SEMI–CORRUGATED TYPE COUPLING BANDS FROM THE SAME METAL AS THE CONNECTING PIPE. PROVIDE COUPLING BANDS NOT MORE THAN 3 NOMINAL SHEET THICKNESSES THINNER THAN THE THICKNESS OF THE PIPE TO BE CONNECTED, AND NO THINNER THAN 0.052 INCH FOR STEEL OR 0.048 INCH FOR ALUMINUM. FASTEN COUPLING BANDS WITH THE FOLLOWING DIAMETER OF BOLT:

3/8 " FOR 18" ROUND CULVERT (21" × 15" ELLIPTICAL PIPE) OR LESS
1/2 " FOR 21" ROUND CULVERT (24" × 18" ELLIPTICAL PIPE) OR MORE 2

[2] FOR HELICALLY CORRUGATED PIPE WITH REROLLED ENDS, THE NOMINAL CORRUGATIONS SIZE REFERS TO THE DIMENSION OF THE END CORRUGATION IN THE PIPE.

[3] USE ANNULAR CORRUGATED BANDS WITH PIPES HAVING ANNULAR CORRUGATIONS OR WITH HELICAL PIPE HAVING REROLLED END TO FORM ANNULAR CORRUGATIONS. A 10.5 INCH BAND IS ACCEPTABLE ON 2 1 PIPE ENDS REROLLED WITH 2 2/3" × 1/2 " CORRUGATIONS. A 12 INCH BAND IS ACCEPTABLE ON PIPE ENDS 3 2 REROLLED WITH 3" × 1" PIPE CORRUGATIONS.

[4] USE HELICAL CORRUGATED BANDS WITH PIPES HAVING HELICALLY CORRUGATED ENDS.

[5] THE MINIMUM BAND WIDTHS SHOWN FOR 3" × 1" AND 5" × 1" CORRUGATED SIZES APPLY TO 2 2/3" × 1/2" CORRUGATIONS ON REROLLED PIPE ENDS.

[6] SMOOTH SLEEVE–TYPE COUPLERS AND FLAT BANDS MAY BE USED FOR PIPE DIAMETERS OF 12" OR LESS. USE A MATCHING METAL HAVING A NOMINAL THICKNESS OF NOT LESS THAN 0.040 INCH FOR STEEL, OR 0.036 INCH FOR ALUMINUM, OR A PLASTIC WITH AN EQUIVALENT STRENGTH TO METAL.

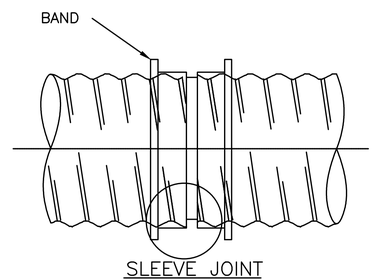

SLEEVE JOINT

SMOOTHER SLEEVE WITH CENTER STOP.
STAB TYPE JOINT

SMOOTH SLEEVE BAND

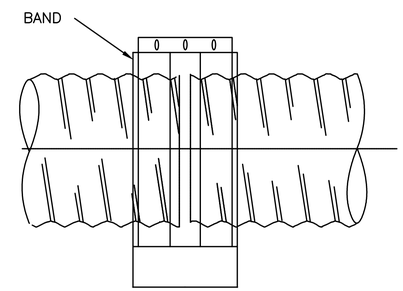

FLAT BAND

NOTES:

1. WATERTIGHT PIPE JOINTS ARE NOT REQUIRED UNLESS SPECIFIED IN THE SPECIAL CONTRACT REQUIREMENTS.
2. OTHER TYPES OF COUPLING BANDS OR FASTENING DEVICES THAT COMPLY WITH THE JOINT PERFORMANCE CRITERIA OF AASHTO STANDARD SPECIFICATIONS FOR HIGHWAY BRIDGES.
3. ALL NEW AND REPLACEMENT CULVERTS TO BE CMP WITH POLYMER COATING INSIDE AND OUT.

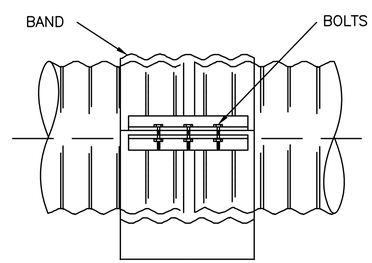

SIDE VIEW

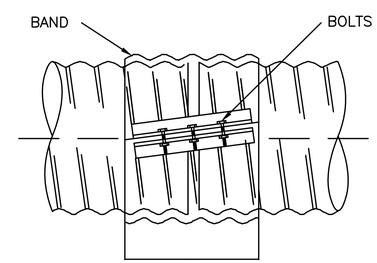

SIDE VIEW

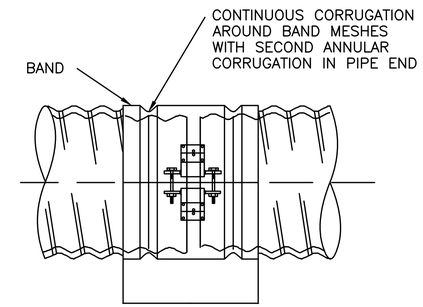

SIDE VIEW

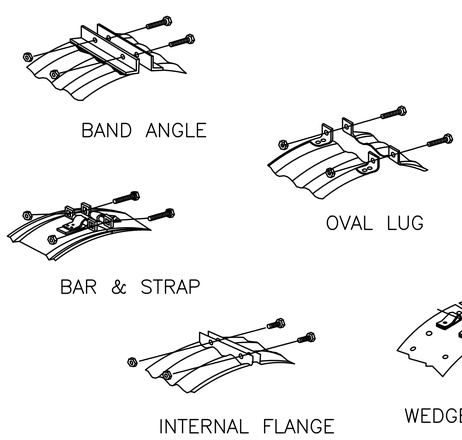

STANDARD BAND CONNECTIONS

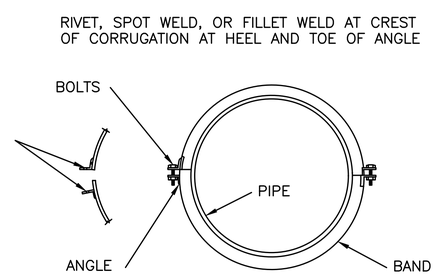

END VIEW

SECOND ANGLE CONNECTION OPTIONAL TO 42" DIAMETER, REQUIRED ABOVE 42" DIAMETER

ANNULAR BAND

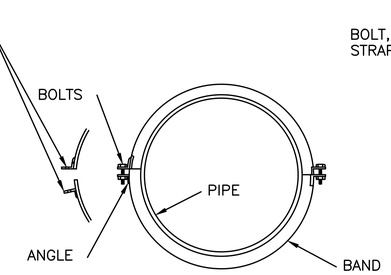

END VIEW

SECOND ANGLE CONNECTION OPTIONAL TO 42" DIAMETER, REQUIRED ABOVE 42" DIAMETER

HELICAL BAND

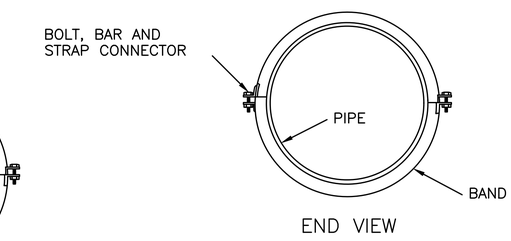

END VIEW

SEMI–CORRUGATED BAND

A METAL CULVERT PIPE COUPLING DETAILS

NO SCALE

FULL SIZE DRAWINGS = 22"x34"
BAR MEASURES 1" LONG

0" 1"

JAMES MILLS NEW MEXICO 29711 PROFESSIONAL ENGINEER

James Mills
2025.04.11
11:15:00-06'00'

DESIGNED: C. MEYER	SUB SHEET NO.	TITLE OF SHEET	DRAWING NO.
CADD C. MEYER	04C507	CIVIL METAL CULVERT PIPE COUPLING DETAILS	315 182751
TECH. REVIEW: J. MILLS			PMIS/PKG NO. 266697
DATE: 04/11/2025		BANDELIER NATIONAL MONUMENT	SHEET 159 OF 203

XG-Border_BAND
XC-BAND_ZD-EG-Master
XC-ROADWAY

3/24/2025 3:56 PM MARQUEA, R24 04C507_D3167658_ROADWAY DETAILS.DWG XC-ROADWAY

NOTES:

1. WHEN DIRECTED, CAMBER PIPE CULVERTS UPWARD FROM A CHORD THROUGH THE INLET AND OUTLET INVERTS AN ORDINATE AMOUNT EQUAL TO 1% OF THE PIPE LENGTH. DEVELOP CAMBER ON A PARABOLIC CURVE. IF THE MIDPOINT ELEVATION ON THE PARABOLIC CURVE AS DESIGNED EXCEEDS THE ELEVATION OF THE INLET INVERT, REDUCE THE AMOUNT OF CAMBER OR INCREASE THE PIPE CULVERT GRADIENT.
2. H EQUALS THE DIAMETER OF ALL ROUND PIPE CULVERTS OR THE RISE DIMENSION OF ALL ELLIPTICAL PIPE CULVERTS.

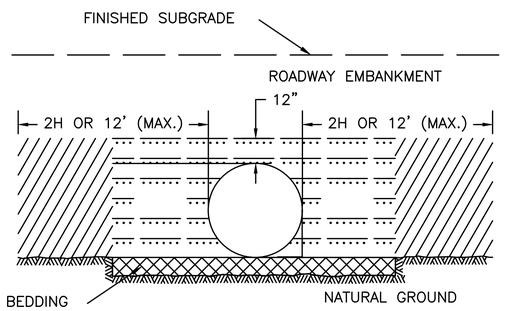

ON NATURAL GROUND

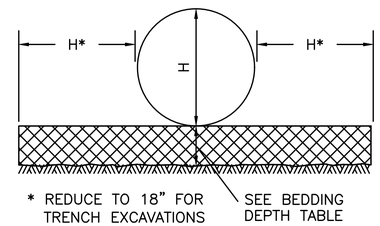

PIPE BEDDING

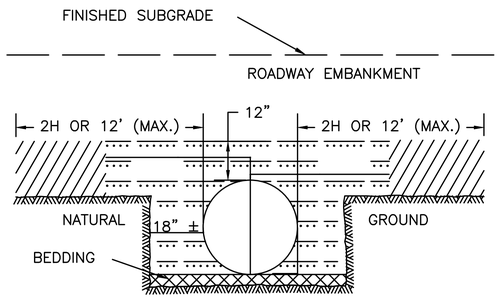

ABOVE AND BELOW NATURAL GROUND

MINIMUM SPACING	
DIAMETER OR SPAN	SPACING
UP TO 48"	24"
48" AND UP	HALF DIAMETER OR SPAN OR 36", WHICHEVER IS LESS

BEDDING DEPTH	
PIPE SIZE (H)	DEPTH
12" TO 54"	4"
> 54"	6"

LEGEND:

- BEDDING MATERIAL (UNCOMPACTED)
- EMBANKMENT MATERIAL PLACED IN LAYERS NOT EXCEEDING 6" COMPACTED DEPTH.
- COMPACTED BACKFILL MATERIAL PLACED IN LAYERS NOT EXCEEDING 6" COMPACTED DEPTH; OR LEAN CONCRETE
- IMPERMEABLE BACKFILL MATERIAL.

A CULVERT BACKFILL DETAILS
NO SCALE

FULL SIZE DRAWINGS = 22"x34" 0" 1"
BAR MEASURES 1" LONG

JAMES MILLS NEW MEXICO 29711 PROFESSIONAL ENGINEER
James Mills
2025.04.11
11:18:56 -06'00'

DESIGNED: C. MEYER	SUB SHEET NO.	TITLE OF SHEET CIVIL	DRAWING NO. 315 182751
CADD C. MEYER	04C508	CULVERT BACKFILL DETAILS	PMIS/PKG NO. 266697
TECH. REVIEW: J. MILLS		BANDELIER NATIONAL MONUMENT	SHEET 160 OF 203
DATE: 04/11/2025			

XG-Border_BAND
XC-BAND_20-EG-Master
XC-ROADWAY
3/24/2025 3:58 PM MARQUEA R24 04C508 D3187658 ROADWAY DETAILS.DWG

END SECTIONS FOR ROUND PIPE CULVERT										
PIPE SIZE DIAMETER INCHES	METAL THICKNESS				DIMENSIONS INCHES					SLOPE APPROX.
	STEEL		ALUMINUM							
	INCHES	GAGE	INCHES	GAGE	A (MIN)	B (MAX)	H (MIN)	L (±2")	W (MAX)	
12	0.064	16	0.060	16	5	7	6	21	44	2¼
15	0.064	16	0.060	16	6	8	6	26	52	2¼
18	0.064	16	0.060	16	7	10	6	31	58	2⅛
21	0.064	16	0.060	16	8	12	6	36	66	2⅛
24	0.064	16	0.060	16	9	13	6	41	72	2⅛

END SECTIONS FOR ELIPTICAL PIPE CULVERT												
PIPE SIZE SPAN × RISE INCHES	EQUIVALENT DIAM. (INCHES)	METAL THICKNESS				DIMENSIONS INCHES					SLOPE APPROX.
		STEEL		ALUMINUM							
		INCHES	GAGE	INCHES	GAGE	A (MIN)	B (MAX)	H (MIN)	L (±2")	W (MAX)	
17 × 13	15	0.064	16	0.060	16	7	9	6	19	30	2½
21 × 15	18	0.064	16	0.060	16	7	10	6	23	36	2½
24 × 18	21	0.064	16	0.060	16	8	12	6	28	42	2½
28 × 20	24	0.064	16	0.060	16	9	14	6	32	48	2½

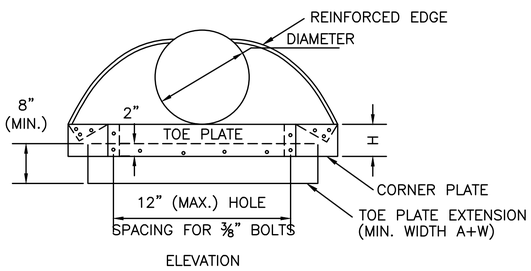

ELEVATION

ROUND PIPE CULVERT

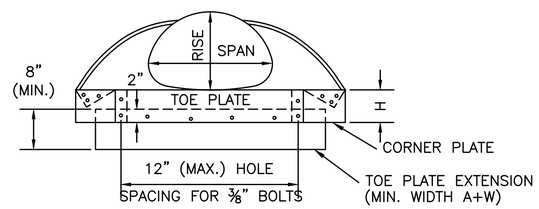

ELEVATION

ELLIPTICAL PIPE CULVERT

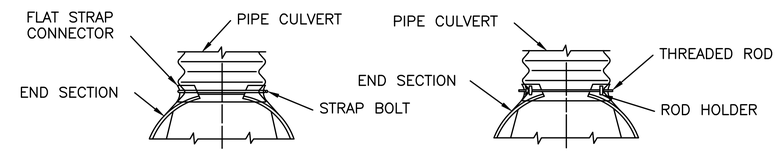

FOR 12" THRU 24" ROUND PIPE AND 17" × 13" THRU 28" × 20" ELLIPTICAL PIPE

FOR 30" THRU 60" ROUND PIPE AND 35" × 24" THRU 66" × 51" ELLIPTICAL PIPE

DESIGN A
CONNECTION TO ANNULAR CORRUGATED METAL PIPE

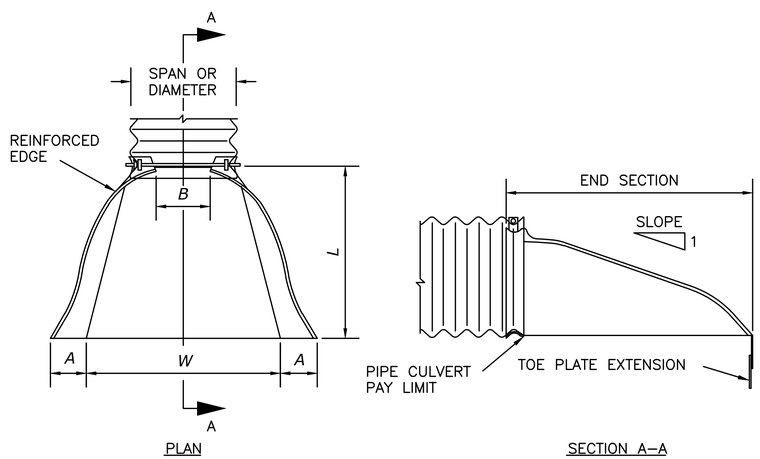

PLAN

SECTION A–A

ROUND OR ELLIPTICAL PIPE CULVERT

NOTES:

1. VARIATIONS IN DESIGN AND DIMENSIONS ARE PERMITTED TO ALLOW FOR MANUFACTURER'S STANDARDS.
2. FABRICATE THE DIAMETER OF THE END SECTION OF DESIGN B TO MATCH THE INSIDE DIAMETER OF THE CONCRETE PIPE CULVERT.
3. COUPLING BANDS MAY BE USED IN LIEU OF DESIGN A FOR ALL METAL PIPE CULVERT SIZES. COUPLING BANDS MAY BE ANY ACCEPTABLE TYPE FOR THE PIPE CULVERT SPECIFIED.
4. FABRICATE MULTIPLE PIECE BODIES WITH LAP SEAMS TIGHTLY JOINED BY 3" RIVETS OR BOLTS. FABRICATE END SECTION CENTER PANELS 8 FOR 60" AND LARGER DIAMETER PIPE AND EQUIVALENT ELLIPTICAL PIPE FROM 0.138 INCH STEEL OR 0.135 INCH ALUMINUM.
5. ON END SECTION CENTER PANELS FOR 66" AND LARGER EQUIVALENT ELLIPTICAL PIPE PROVIDE 2 ½" × 2 ½" × ¼" ANGLE REINFORCEMENT BOLTED OR RIVETED UNDER THE CENTER PANEL SEAM.
6. SUPPLEMENT THE REINFORCED EDGES OF END SECTIONS FOR 60" AND LARGER DIAMETER PIPE AND 66" AND LARGER EQUIVALENT ELLIPTICAL PIPE WITH 2 ½" × 2 ½" × ¼" STIFFENER ANGLES ATTACHED WITH BOLTS OR RIVETS.
7. FABRICATE CONNECTOR SECTION, CORNER PLATE AND TOE PLATE EXTENSIONS FROM THE SAME METAL THICKNESS AS THE PANEL BODY. USE TOE PLATE EXTENSION WHERE SHOWN ON THE PLANS.
8. WARP EMBANKMENT SLOPES TO MATCH THE SLOPE OF THE FLARED END SECTIONS.
9. ALL NEW AND REPLACEMENT PIPE END SECTIONS TO BE PAINTED OR POWDER COATED FOR CORROSION PROTECTION.

A CULVERT END SECTION DETAILS

NO SCALE

FULL SIZE DRAWINGS = 22"x34" 0" 1"
BAR MEASURES 1" LONG

JAMES MILLS NEW MEXICO 29711 PROFESSIONAL ENGINEER
James Mills
2025.04.11
11:21:21-06'00'

DESIGNED: C. MEYER	SUB SHEET NO.	TITLE OF SHEET	DRAWING NO.
CADD C. MEYER	04C509	CIVIL CULVERT END SECTION DETAILS	315 182751
TECH. REVIEW: J. MILLS			PMIS/PKG NO. 266697
DATE: 04/11/2025		BANDELIER NATIONAL MONUMENT	SHEET 161 OF 203

XG-Border_BAND
XC-BAND_2D-EG-Master
XC-ROADWAY
3/24/2025 4:02 PM MARQUEA R24 04C509_D3167659_ROADWAY DETAILS.DWG

METAL ROUND PIPE CULVERT

FILL HEIGHT AND METAL THICKNESS TABLE FOR HELICAL LOCKSEAM AND WELDED SEAM PIPE CULVERT

STEEL

PIPE SIZE DIAMETER INCHES	MINIMUM COVER INCHES	2⅔" x ½" CORRUGATIONS					3" x 1" CORRUGATIONS					5" x 1" CORRUGATIONS				
		METAL THICKNESS (INCH/GAGE)														
		0.064/16	0.079/14	0.109/12	0.138/10	0.168/8	0.064/16	0.079/14	0.109/12	0.138/10	0.168/8	0.064/16	0.079/14	0.109/12	0.138/10	0.168/8
		MAXIMUM FILL HEIGHT ABOVE TOP OF PIPE (FEET)														
12	12	100	100	100	100	100										
15	12	100	100	100	100	100										
18	12	100	100	100	100	100										
21	12	100	100	100	100	100										
24	12	100	100	100	100	100										

ALUMINUM

PIPE SIZE DIAMETER INCHES	MINIMUM COVER INCHES	2⅔" x ½" CORRUGATIONS					3" x 1" CORRUGATIONS				
		METAL THICKNESS (INCH/GAGE)									
		0.060/16	0.075/14	0.105/12	0.135/10	0.164/8	0.060/16	0.075/14	0.105/12	0.135/10	0.164/8
		MAXIMUM FILL HEIGHT ABOVE TOP OF PIPE (FEET)									
12	12	100	100	100	100	100					
15	12	100	100	100	100	100					
18	12	100	100	100	100	100					
21	12	88	100	100	100	100					
24	12	77	97	100	100	100					

(A) ROUND METAL PIPE COVER DETAIL

NO SCALE

NOTES:

1. WHEN DIRECTED, CAMBER PIPE CULVERTS UPWARD FROM A CHORD THROUGH THE INLET AND OUTLET INVERTS AN ORDINATE AMOUNT EQUAL TO 1% OF THE PIPE LENGTH. DEVELOP CAMBER ON A PARABOLIC CURVE. IF THE MIDPOINT ELEVATION ON THE PARABOLIC CURVE AS DESIGNED EXCEEDS THE ELEVATION OF THE INLET INVERT, REDUCE THE AMOUNT OF CAMBER OR INCREASE THE PIPE CULVERT GRADIENT.
2. FILL HEIGHTS EXCEEDING 100 FEET REQUIRE SPECIAL ANALYSIS BY THE CO.
3. THE FILL HEIGHTS IN THE TABLE ARE FOR HELICAL LOCKSEAM AND WELDED SEAM PIPE ONLY. FILL HEIGHTS FOR CULVERT PIPE WITH ANNULAR CORRUGATIONS ARE MORE RESTRICTIVE THAN THOSE OF HELICAL LOCKSEAM AND WELDED SEAM PIPE. OBTAIN APPROVAL BEFORE FURNISHING ANNULAR CORRUGATION PIPE.
4. MEASURE MINIMUM COVER FROM THE TOP OF THE PIPE CULVERT TO THE SUBGRADE FOR FLEXIBLE PAVEMENTS, AND TO THE TOP OF THE PAVEMENT FOR RIGID PAVEMENTS. MEASURE MAXIMUM FILL HEIGHT FROM THE TOP OF THE PIPE TO THE TOP OF THE PAVEMENT FOR BOTH FLEXIBLE AND RIGID PAVEMENT.

METAL ELLIPTICAL PIPE CULVERT

FILL HEIGHT AND METAL THICKNESS TABLE FOR HELICAL LOCKSEAM AND WELDED SEAM PIPE CULVERT

STEEL

PIPE SIZE SPAN x RISE INCHES	EQUI-VALENT DIAMETER INCHES	MINIMUM CORNER RADIUS INCHES	MINIMUM COVER INCHES	2⅔" x ½" CORRUGATIONS					3" x 1" CORRUGATIONS				5" x 1" CORRUGATIONS			
				METAL THICKNESS (INCH/GAGE)												
				0.064/16	0.079/14	0.109/12	0.138/10	0.168/8	0.079/14	0.109/12	0.138/10	0.168/8	0.079/14	0.109/12	0.138/10	0.168/8
				MAXIMUM FILL HEIGHT ABOVE TOP OF PIPE (FEET)												
17 x 13	15	3	12	13												
21 x 15	18	3	12	12												
24 x 18	21	3	12	13												
28 x 20	24	3	12	13												

ALUMINUM

PIPE SIZE SPAN x RISE INCHES	EQUI-VALENT DIAMETER INCHES	MINIMUM CORNER RADIUS INCHES	MINIMUM COVER INCHES	2⅔" x ½" CORRUGATIONS				3" x 1" CORRUGATIONS			
				METAL THICKNESS (INCH/GAGE)							
				0.060/16	0.075/14	0.105/12	0.135/10	0.060/16	0.075/14	0.105/12	0.135/10
				MAXIMUM FILL HEIGHT ABOVE TOP OF PIPE (FEET)							
17 x 13	15	3	12	13							
21 x 15	18	3	12	12							
24 x 18	21	3	12	13							
28 x 20	24	3	12		13						

(B) ELLIPTICAL METAL PIPE COVER DETAIL

NO SCALE

FULL SIZE DRAWINGS = 22"x34"
BAR MEASURES 1" LONG

0" 1"

JAMES MILLS NEW MEXICO 29711 PROFESSIONAL ENGINEER

James Mills
2025.04.11
11:51:29-06'00'

DESIGNED: C. MEYER	SUB SHEET NO.	TITLE OF SHEET	DRAWING NO.
CADD C. MEYER	05C510	CIVIL CULVERT PIPE COVER DETAILS	315
TECH. REVIEW: J. MILLS			182751
DATE: 04/11/2025		BANDELIER NATIONAL MONUMENT	PMIS/PKG NO. 266697
			SHEET 162 OF 203

XG-Border_BAND
XC-BAND_2D-EC-Master
XC-ROADWAY

3/24/2025 4:04 PM MARQUEA R24 04C510 D3167658 ROADWAY DETAILS.DWG XC-ROADWAY

NOTES:

1. CENTER WHEELSTOPS BETWEEN AND PERPENDICULAR TO STALL LINES.
2. VARIATIONS IN WHEELSTOPS WILL BE ALLOWED TO MEET MANUFACTURER'S STANDARDS WITH THE APPROVAL OF THE CO.
3. PIN THE WHEELSTOPS WITH NO. 6 REINFORCING STEEL OR ¾-INCH STEEL RODS.
4. EXTEND THE REINFORCING STEEL TO WITHIN 1 INCH OF ENDS OF WHEELSTOP.

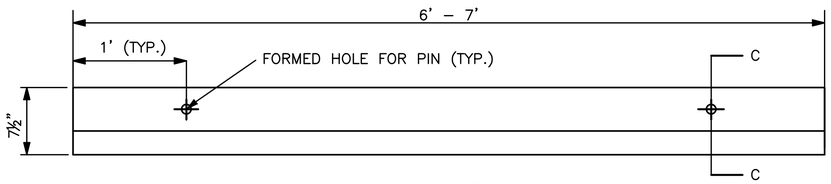

PLAN VIEW

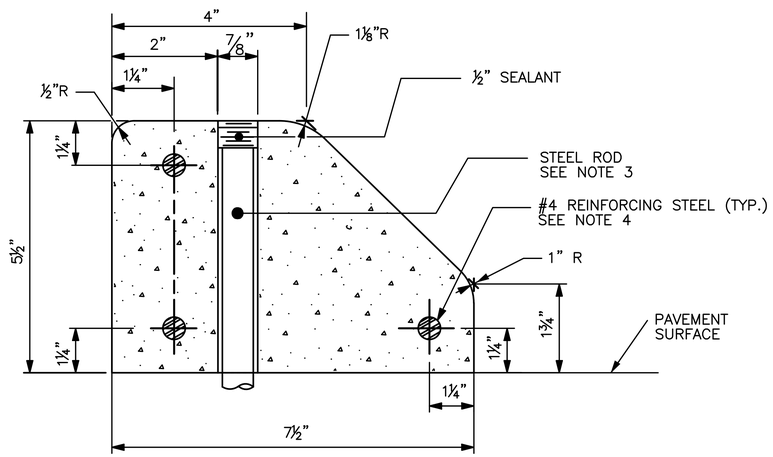

SECTION C–C

A CONCRETE WHEELSTOP

NO SCALE

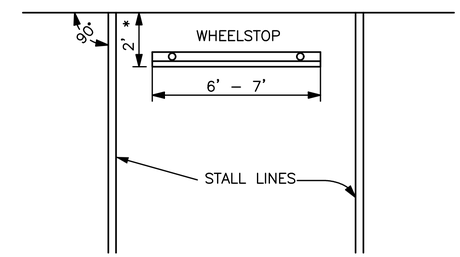

HEAD–ON PARKING

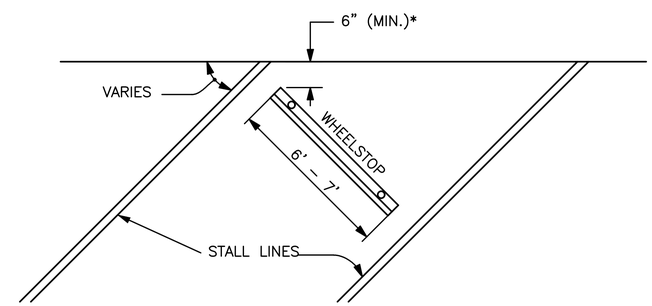

ANGULAR PARKING

* INCREASE DISTANCE FOR WALL OR OTHER OBSTRUCTIONS AS DIRECTED BY THE CO.

B WHEELSTOP LAYOUT

NO SCALE

FULL SIZE DRAWINGS = 22"x34" 0" 1"
BAR MEASURES 1" LONG

JAMES MILLS NEW MEXICO 29711 PROFESSIONAL ENGINEER

James Mills
2025.04.11
11:26:20-06'00'

DESIGNED: C. MEYER	SUB SHEET NO.	TITLE OF SHEET	DRAWING NO.
CADD C. MEYER	04C511	CIVIL CONCRETE WHEELSTOP DETAILS	315 182751
TECH. REVIEW: J. MILLS			PMIS/PKG NO. 266697
DATE: 04/11/2025		BANDELIER NATIONAL MONUMENT	SHEET 163 OF 203

XG-Border_BAND
XC-BAND_2D-EG-Master
3/24/2025 4:06 PM MARQUEA R24 04C511_D3167658_ROADWAY DETAILS.DWG XC-ROADWAY

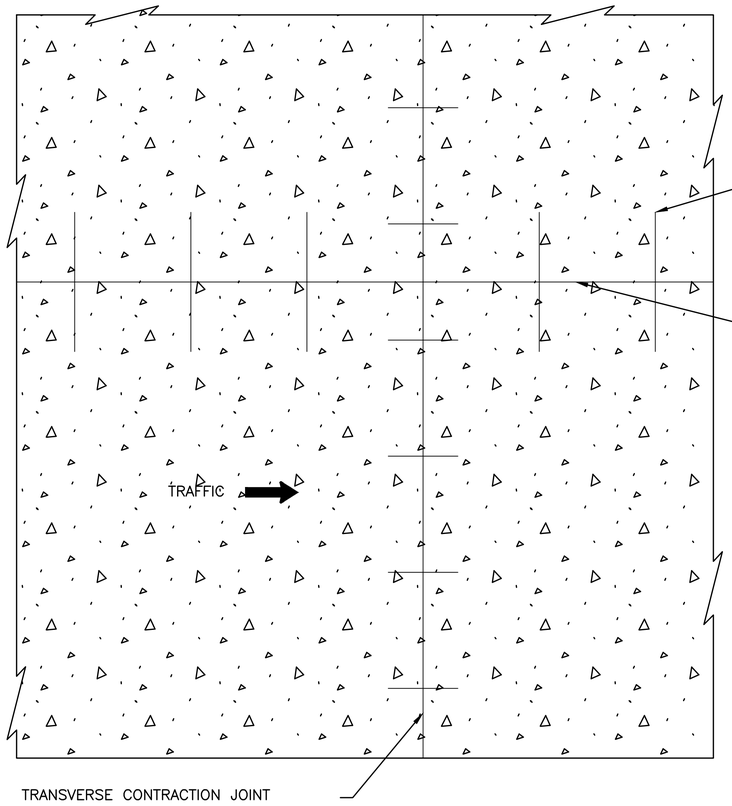

PLAN

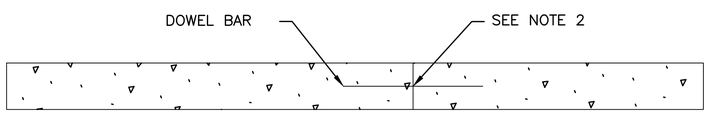

PROFILE

A PLAIN MINOR CONCRETE PAVEMENT

NO SCALE

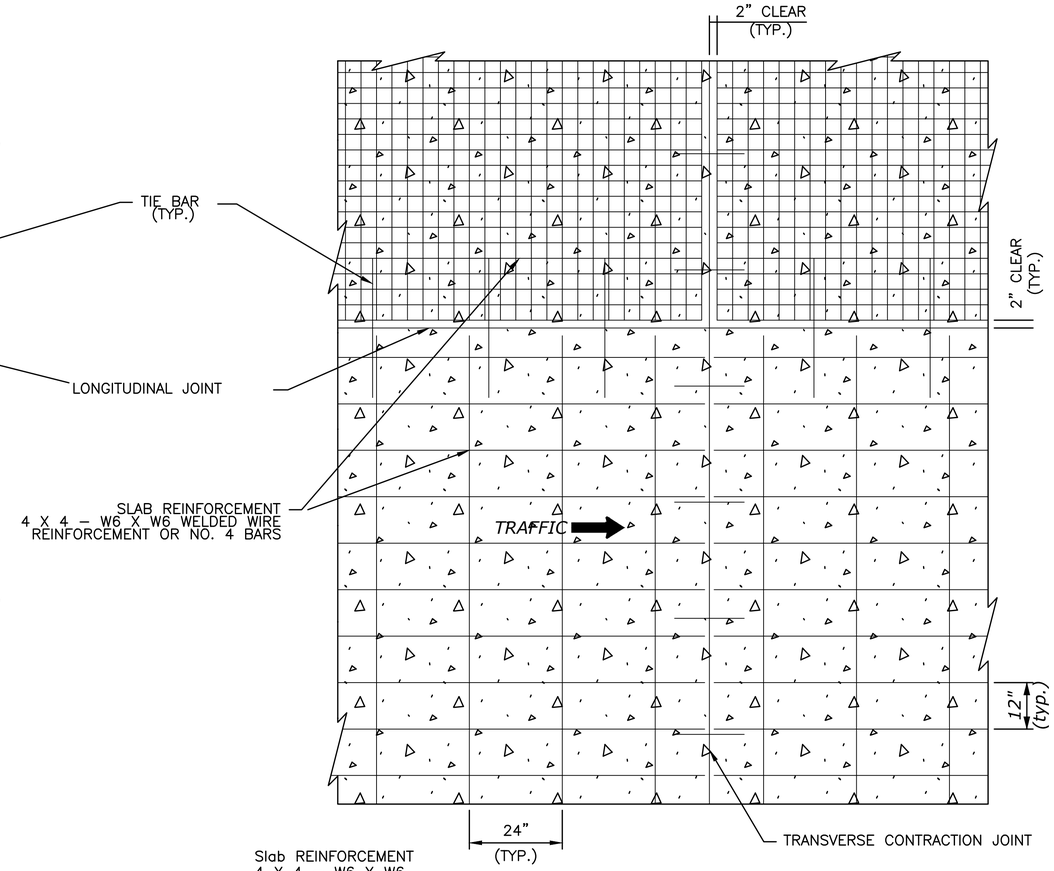

PLAN

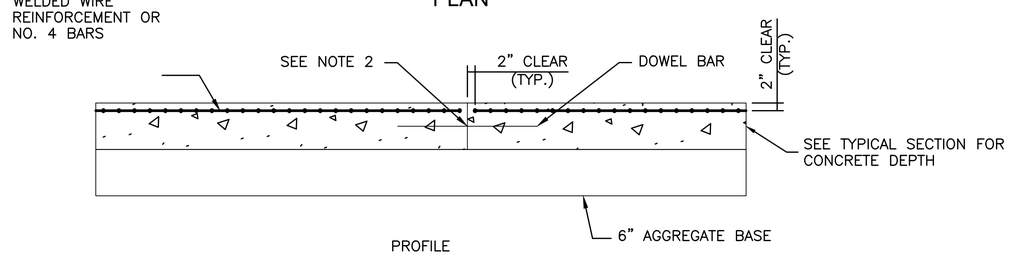

PROFILE

B REINFORCED MINOR CONCRETE PAVEMENT

NO SCALE

NOTES:

1. PROVIDE THE SAME TYPE OF DOWEL ASSEMBLIES AND TIE BARS FOR JOINTS IN PLAIN PORTLAND CEMENT CONCRETE PAVEMENT AS SHOWN FOR JOINTS IN REINFORCED PAVEMENT.
2. SEE 04C513 FOR JOINT AND JOINT SEALING DETAILS.
3. LAP LONGITUDINAL AND TRANSVERSE REINFORCEMENT NOT LESS THAN 15 INCHES.

FULL SIZE DRAWINGS = 22"x34" 0" 1"
BAR MEASURES 1" LONG

JAMES MILLS NEW MEXICO 29711 PROFESSIONAL ENGINEER

James Mills
2025.04.11
12:01:09 -06'00'

DESIGNED: C. MEYER	SUB SHEET NO.	TITLE OF SHEET	DRAWING NO.
CADD C. MEYER	04C512	CIVIL MINOR CONCRETE PAVEMENT DETAILS	315 182751
TECH. REVIEW: J. MILLS			PMIS/PKG NO. 266697
DATE: 04/11/2025		BANDELIER NATIONAL MONUMENT	SHEET 164 OF 203

XG-Border_BAND
XC-BAND_ZD-EG-Master
XC-ROADWAY
3/24/2025 4:08 PM MARQUEA, R24 04C512_D3167658_ROADWAY DETAILS.DWG

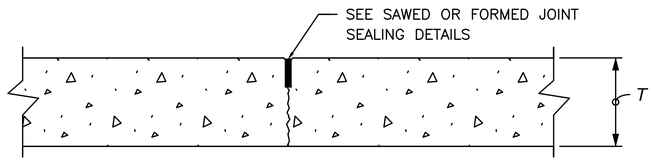

CONTRACTION JOINT
UNDOWELED – TRANSVERSE and UNTIED – LONGITUDINAL

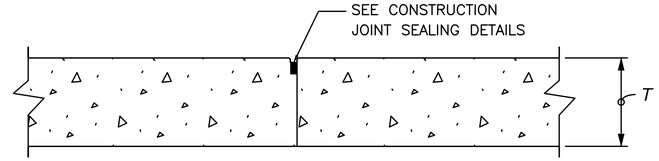

CONSTRUCTION JOINT
PLAIN – TRANSVERSE or LONGITUDINAL

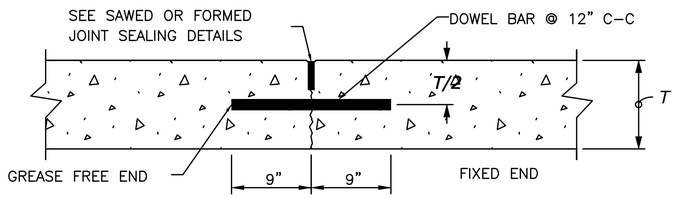

CONTRACTION JOINT
DOWELED – TRANSVERSE

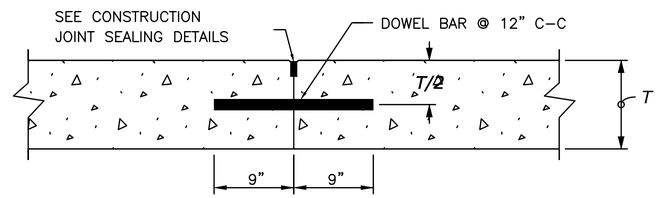

CONSTRUCTION JOINT
DOWEL BUTT – TRANSVERSE

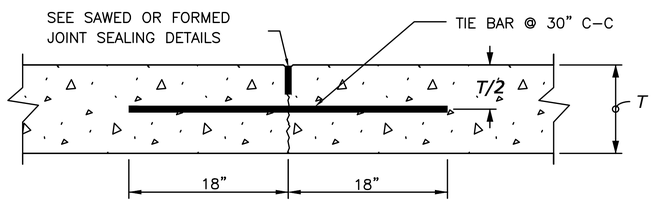

CONTRACTION JOINT
TIED – LONGITUDINAL

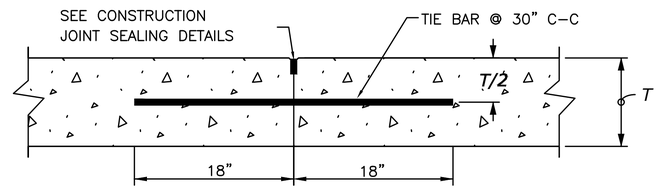

CONSTRUCTION JOINT
TIED BUTT – LONGITUDINAL

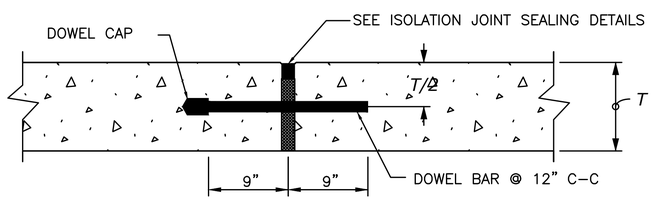

ISOLATION/EXPANSION JOINT
DOWELED – TRANSVERSE

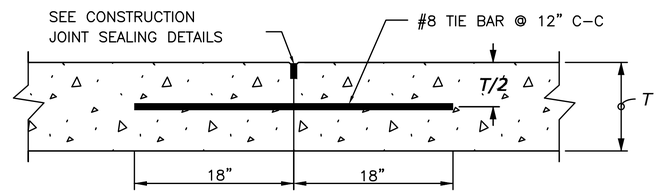

CONSTRUCTION JOINT
TIED BUTT – TRANSVERSE

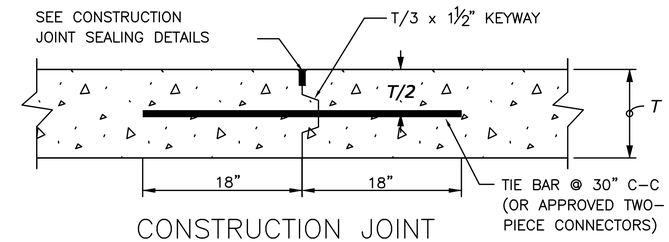

CONSTRUCTION JOINT
KEYWAY – LONGITUDINAL

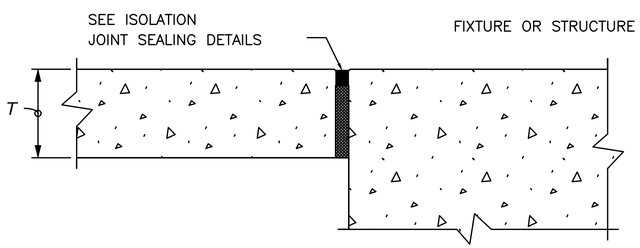

ISOLATION JOINT
UNDOWELED – LONGITUDINAL

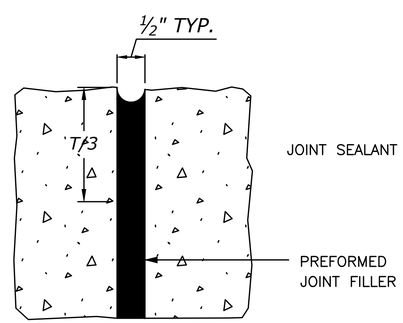

ISOLATION JOINT

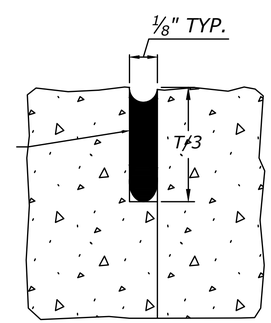

CONSTRUCTION JOINT

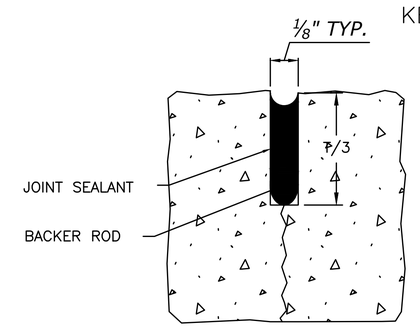

SAWED OR FORMED JOINT

NOTES:

1. USE EPOXY–COATED MATERIAL FOR ALL TIE BARS, DOWELS, AND OTHER STEEL USED IN THE CONSTRUCTION OF CONCRETE PAVEMENT.
2. DEFORMED REINFORCING BARS OR HOOK BOLTS MAY BE USED FOR TIE BARS.
3. DO NOT PLACE TIE BARS WITHIN 15 INCHES OF TRANSVERSE JOINTS.
4. INSTALL ISOLATION JOINTS WHEN ABUTTING A FIXED STRUCTURE. USE EXPANSION JOINT MATERIAL EXTENDING THE FULL DEPTH AND LENGTH OF THE CONCRETE SURFACE.
5. TRANSVERSE AND LONGITUDINAL CONSTRUCTION JOINTS ARE NOT INCLUDED IN THE JOINT LAYOUT PLAN. USE TRANSVERSE AND LONGITUDINAL CONSTRUCTION JOINTS SPARINGLY. SUBMIT PLANNED CONSTRUCTION JOINT LOCATIONS FOR APPROVAL.
6. FOR CONSTRUCTION JOINTS, IF TIE BARS AND DOWELS ARE NOT SET INTO CONCRETE DURING PLACEMENT, DRILL AND ANCHOR THE TIE BARS AND DOWELS INTO THE EXISTING CONCRETE CONSTRUCTION WITH EPOXY RESIN.
7. MAINTAIN JOINT SEALANT SHAPE FACTOR OF 1:1; EXCEPT WHEN SILICONE SEALANT IS USED MAINTAIN THE WIDTH TO DEPTH SHAPE FACTOR OF 2:1 OR AS RECOMMENDED BY THE SEALANT MANUFACTURER.
8. SEE SPECIFICATIONS FOR JOINT MATERIAL REQUIREMENTS.
9. SEE SHEET 04C512 FOR REINFORCEMENT DETAILS.

BAR SIZES

PAVEMENT THICKNESS (T) (IN)	TIE BAR	DOWEL BAR DIAMETER (IN)
T ≤ 8	#5	1
8 < T ≤ 10	#5	1¼
10 < T ≤ 12	#6	1½

(A) MINOR CONCRETE PAVEMENT JOINT SEALING DETAILS
NO SCALE

FULL SIZE DRAWINGS = 22"x34" 0" 1"
BAR MEASURES 1" LONG

JAMES MILLS NEW MEXICO 29711 PROFESSIONAL ENGINEER
James Mills
2025.04.11
11:53:43-06'00'

DESIGNED: C. MEYER	SUB SHEET NO.	TITLE OF SHEET CIVIL	DRAWING NO. 315
CADD C. MEYER	04C513	MINOR CONCRETE PAVEMENT JOINT SEALING DETAILS	182751
TECH. REVIEW: J. MILLS			PMIS/PKG NO. 266697
DATE: 04/11/2025		BANDELIER NATIONAL MONUMENT	SHEET 165 OF 203

XG-Border_BAND
XC-BAND_2D-EG-Master
XC-ROADWAY
3/24/2025 4:10 PM MARQUEA 024 04C513_03167658_ROADWAY DETAILS.DWG

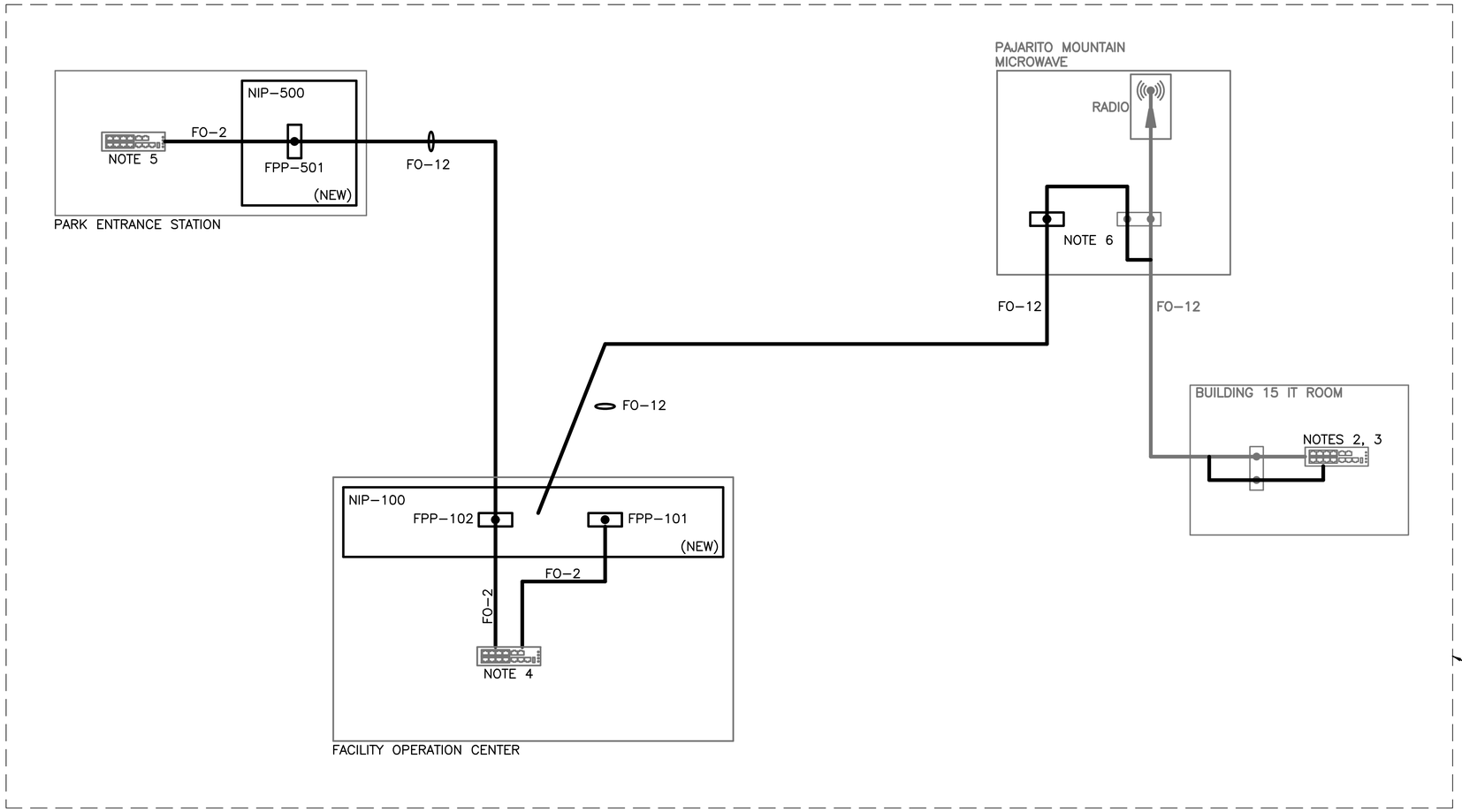

NOTES

1. CABLE ACRONYMS
   - FO–X – SINGLE MODE FIBER– OPTIC CABLE, X – NUMBER OF STRANDS
   - CAT6 – ETHERNET CABLE
   - HW – HARDWIRED IO CABLE
   - FPP – FIBER PATCH PANEL
   - COAX – COAXIAL CABLE
2. NPS MAIN NETWORKS SWITCH (EXISTING) EXTREME NETWORKS X460–G2 ADD SINGLE–MODE (OS2) SFP MODULE AND PATCH CABLES.
3. NOT SHOWN ARE THE NETWORK SWITCHES IN EACH OF THE VISITOR CENTER BUILDINGS CONNECTED TO THE MAIN NETWORK SWITCH.
4. FOC NETWORK SWITCH (EXISTING) EXTREME NETWORKS ERS3626
5. PARK ENTRANCE STATION NETWORK SWITCH (EXISTING) EXTREME NETWORKS ERS3510
6. USE EXISTING PATCH PANEL. ADD 12 (6 PAIR) LC DUPLEX SINGLE–MODE (OS2) CONNECTORS.
7. MISSION COMMUNICATIONS MYDRO 850 REMOTE MONITORING SYSTEM WITH CELLULAR MODEM AND ANTENNA.

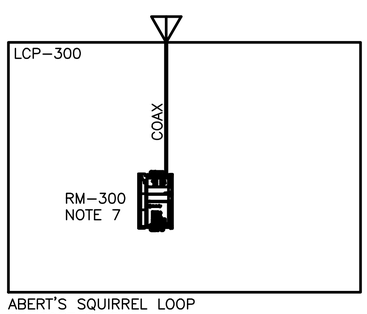

ABERT'S SQUIRREL LOOP
COMFORT STATION

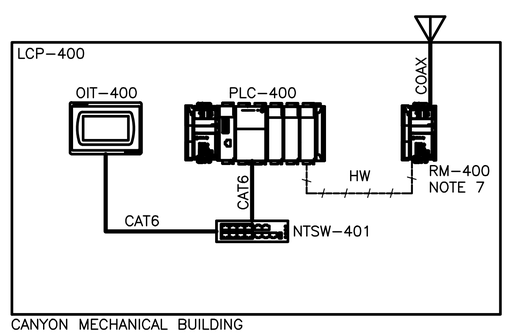

CANYON MECHANICAL BUILDING

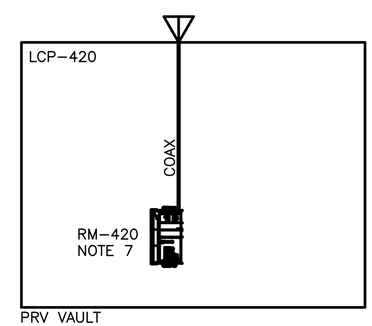

PRV VAULT

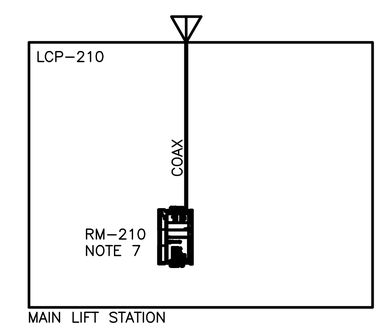

MAIN LIFT STATION

FULL SIZE DRAWINGS = 22"x34" 0" 1"
BAR MEASURES 1" LONG

JONATHAN B. JAMES
NEW MEXICO
18614
PROFESSIONAL ENGINEER
Digitally signed by Jonathan James
Date: 2025.04.11 12:35:29-06'00'

DESIGNED: A WILLIAMS	SUB SHEET NO.	TITLE OF SHEET INSTRUMENTATION AND CONTROLS	DRAWING NO. 315 182751
CADD E KRISTEL	08Y601	NETWORK TOPOLOGY	PMIS/PKG NO. 266697
TECH. REVIEW: D ATURALIYE		BANDELIER NATIONAL MONUMENT	SHEET 166 OF 203
DATE: 04/11/2025			

3/25/2025 11:08 AM EKRISTEL R24 08Y601_D3167658.DWG XG-Border BAND

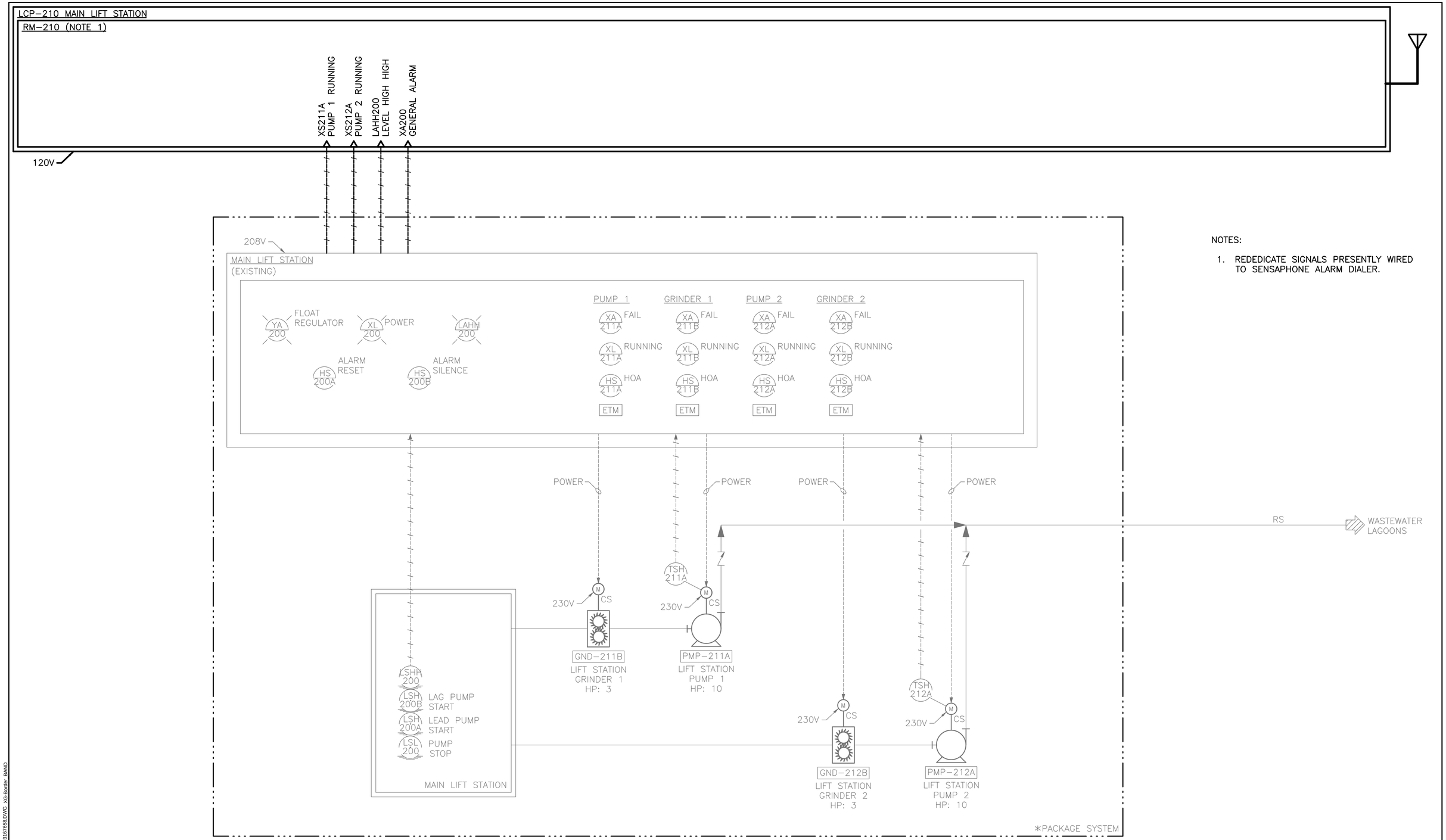

NOTES:

1. REDEDICATE SIGNALS PRESENTLY WIRED TO SENSAPHONE ALARM DIALER.

FULL SIZE DRAWINGS = 22"x34" 0" 1"
BAR MEASURES 1" LONG

JONATHAN B. JAMES NEW MEXICO 18614 PROFESSIONAL ENGINEER

Digitally signed by Jonathan James
Date: 2025.04.11 12:35:30-06'00'

DESIGNED: A WILLIAMS	SUB SHEET NO.	TITLE OF SHEET	DRAWING NO. 315
CADD E KRISTEL	08Y602	INSTRUMENTATION AND CONTROLS	182751
TECH. REVIEW: D ATURALIYE		FRIJOLES CANYON MAIN LIFT STATION P&ID	PMIS/PKG NO. 266697
DATE: 04/11/2025		BANDELIER NATIONAL MONUMENT	SHEET 167 OF 203

3/25/2025 11:09 AM EKRISTEL 024 08Y602_D3167658.DWG XG:Butler BAND

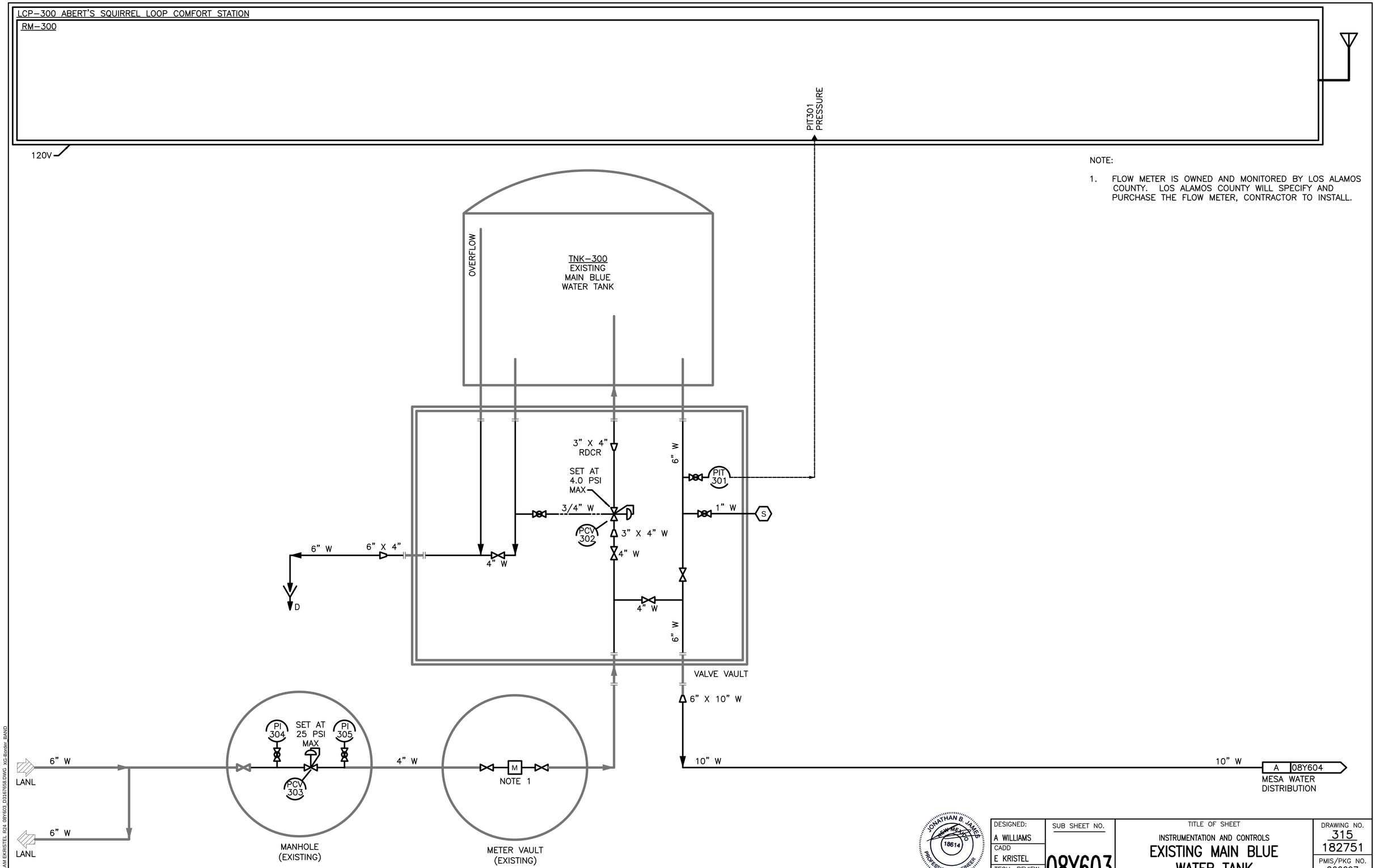

NOTE:

1. FLOW METER IS OWNED AND MONITORED BY LOS ALAMOS COUNTY. LOS ALAMOS COUNTY WILL SPECIFY AND PURCHASE THE FLOW METER, CONTRACTOR TO INSTALL.

JONATHAN B. JAMES
NEW MEXICO
18614
PROFESSIONAL ENGINEER

Digitally signed by Jonathan James
Date: 2025.04.11 12:35:31-06'00'

DESIGNED: A WILLIAMS	SUB SHEET NO.	TITLE OF SHEET	DRAWING NO. 315
CADD E KRISTEL	08Y603	INSTRUMENTATION AND CONTROLS	182751
TECH. REVIEW: D ATURALIYE		EXISTING MAIN BLUE WATER TANK	PMIS/PKG NO. 266697
DATE: 04/11/2025		P&ID	SHEET 168 OF 203
		BANDELIER NATIONAL MONUMENT	

3/25/2025 11:10 AM EKRISTEL R24 08Y603_D3167658.DWG XG-Border_BAND

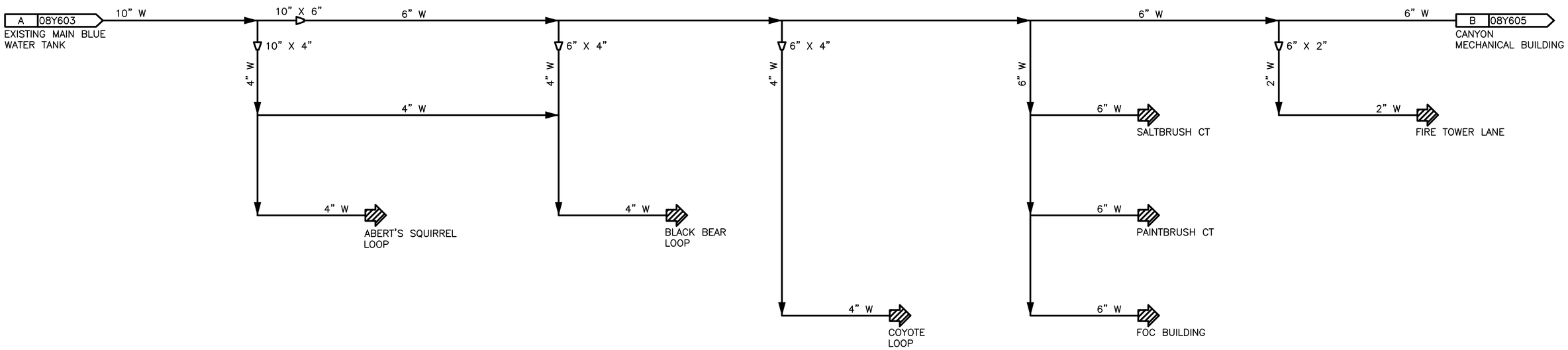

FULL SIZE DRAWINGS = 22"x34" 0" 1"
BAR MEASURES 1" LONG

JONATHAN B. JAMES
NEW MEXICO
18614
PROFESSIONAL ENGINEER

Digitally signed by Jonathan James
Date: 2025.04.11 12:35:31-06'00'

DESIGNED: A WILLIAMS	SUB SHEET NO.	TITLE OF SHEET	DRAWING NO. 315
CADD E KRISTEL	08Y604	INSTRUMENTATION AND CONTROLS	182751
TECH. REVIEW: D ATURALIYE		MESA WATER DISTRIBUTION P&ID	PMIS/PKG NO. 266697
DATE: 04/11/2025		BANDELIER NATIONAL MONUMENT	SHEET 169 OF 203

3/25/2025 11:10 AM EKRISTEL R24 08Y604_D3167658.DWG XG:Border BAND

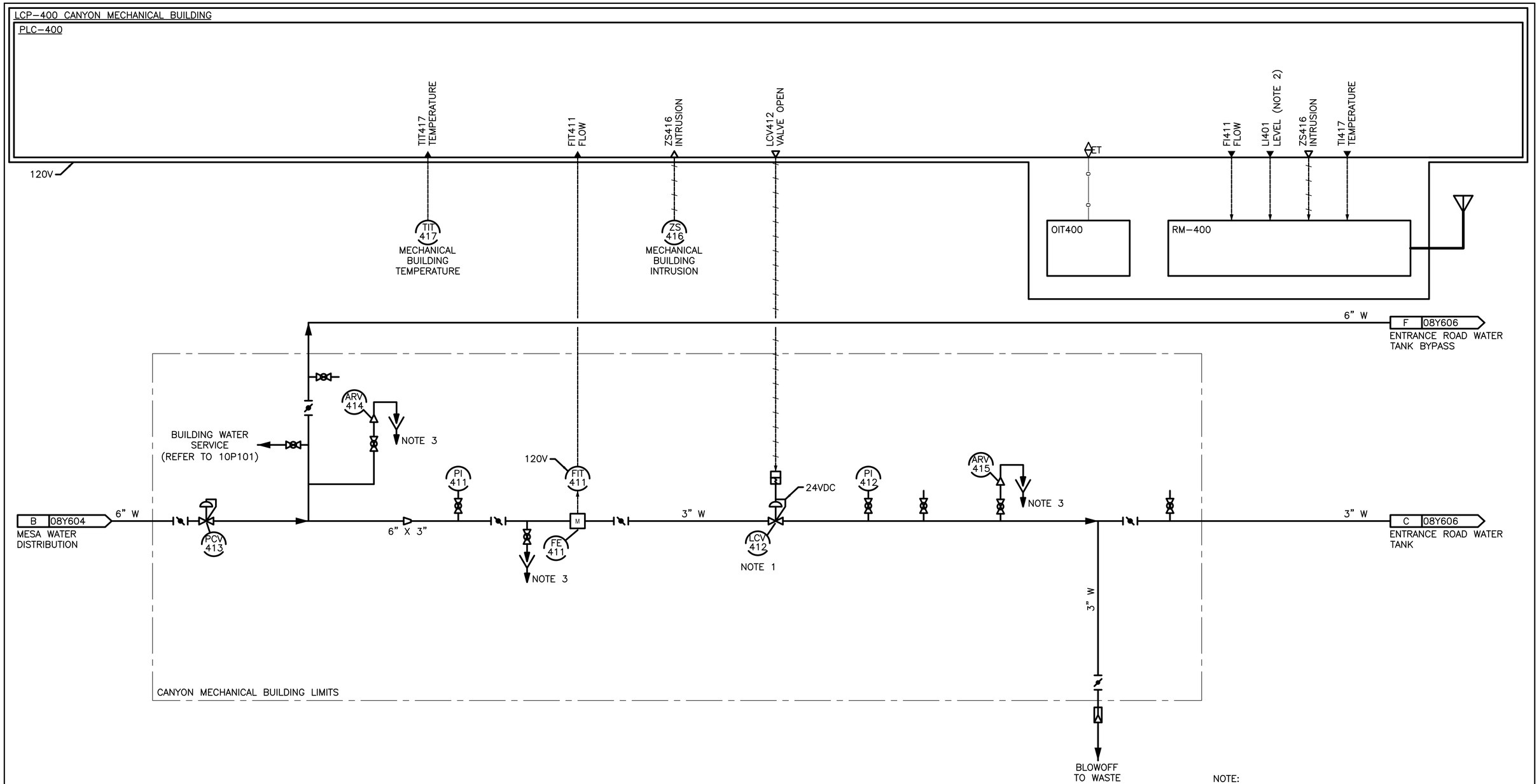

NOTE:

1. COMBINATION RATE OF FLOW AND PRESSURE REDUCING VALVE WITH SOLENOID.
2. SEE 40 90 00B SUPPLEMENT 1 CONTROL DESCRIPTION FOR SIGNAL DEFINITION.
3. ROUTE ALL PROCESS DRAINS TO FLOOR DRAIN.

FULL SIZE DRAWINGS = 22"x34" 0" 1"
BAR MEASURES 1" LONG

JONATHAN B. JAMES NEW MEXICO 18614 PROFESSIONAL ENGINEER

Digitally signed by Jonathan James
Date: 2025.04.11 12:35:32-06'00'

DESIGNED: A WILLIAMS	SUB SHEET NO.	TITLE OF SHEET	DRAWING NO.
CADD E KRISTEL	08Y605	INSTRUMENTATION AND CONTROLS	315
TECH. REVIEW: D ATURALIYE		CANYON MECHANICAL BUILDING P&ID	182751
DATE: 04/11/2025		BANDELIER NATIONAL MONUMENT	PMIS/PKG NO. 266697
			SHEET 170 OF 203

3/25/2025 11:11 AM EKRISTEL R24 08Y605_D3187658.DWG XG-Border_BAND

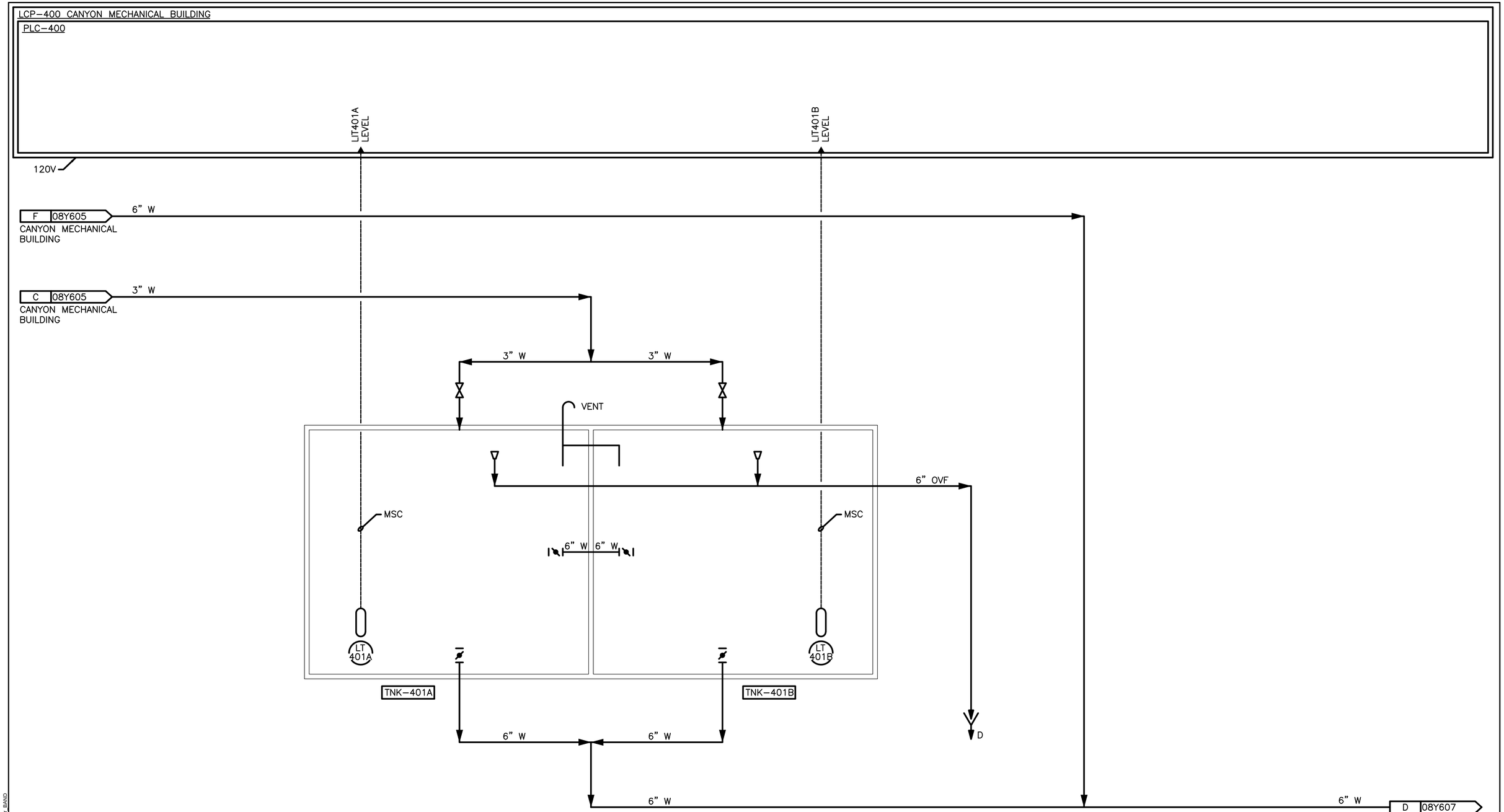

FULL SIZE DRAWINGS = 22"x34" 0" 1"
BAR MEASURES 1" LONG

JONATHAN B. JAMES
NEW MEXICO
18614
PROFESSIONAL ENGINEER

Digitally signed by Jonathan James
Date: 2025.04.11 12:35:33-06'00'

DESIGNED: A WILLIAMS	SUB SHEET NO.	TITLE OF SHEET	DRAWING NO. 315
CADD E KRISTEL	08Y606	INSTRUMENTATION AND CONTROLS	182751
TECH. REVIEW: D ATURALIYE		ENTRANCE ROAD WATER TANK P&ID	PMIS/PKG NO. 266697
DATE: 04/11/2025		BANDELIER NATIONAL MONUMENT	SHEET 171 OF 203

3/25/2025 11:12 AM EKRISTEL P24 08Y606_D3167658.DWG XG:Border BAND

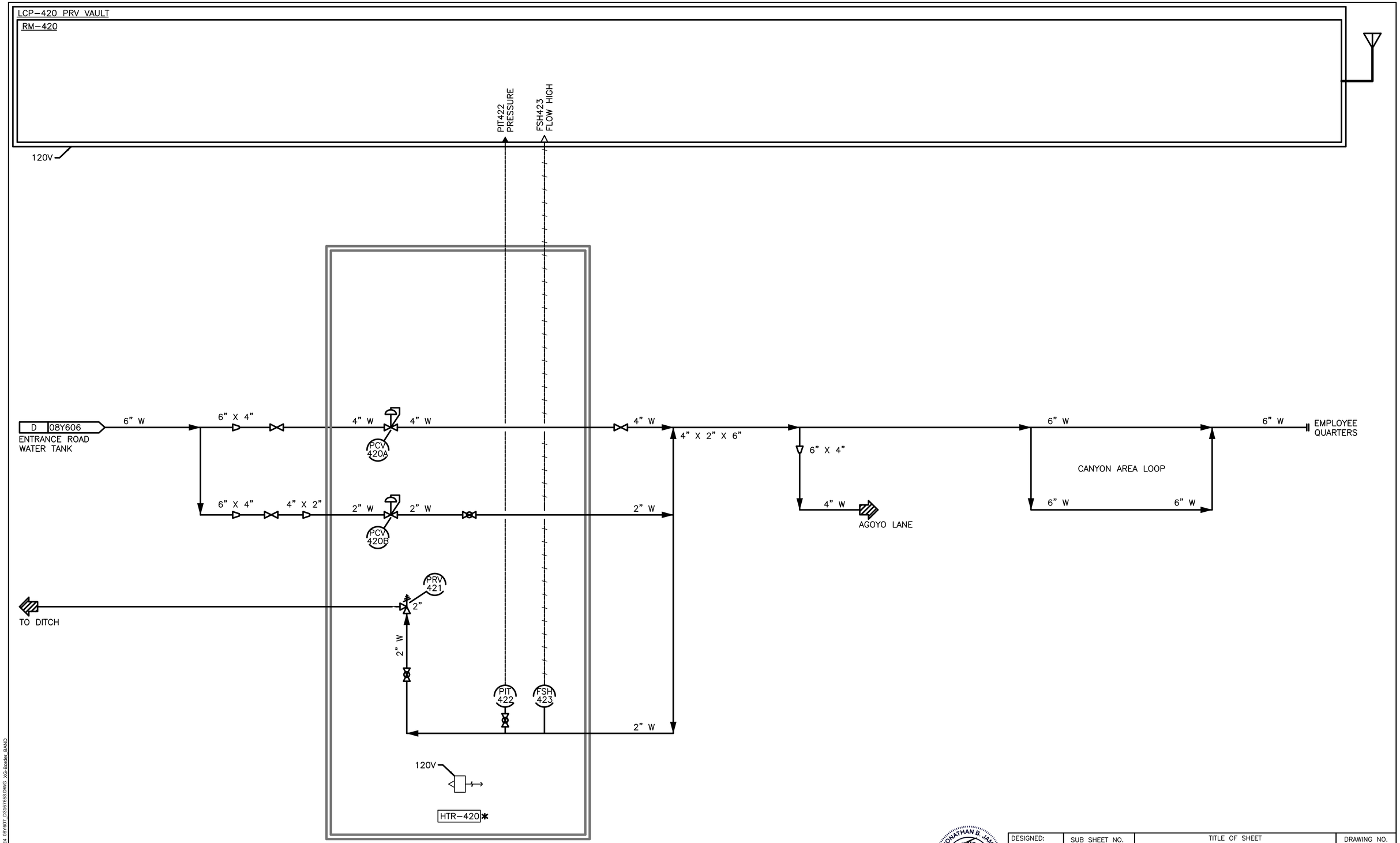

FULL SIZE DRAWINGS = 22"x34" 0" 1"
BAR MEASURES 1" LONG

JONATHAN B. JAMES
NEW MEXICO
18614
PROFESSIONAL ENGINEER

Digitally signed by Jonathan James
Date: 2025.04.11 12:35:34-06'00'

DESIGNED: A WILLIAMS	SUB SHEET NO.	TITLE OF SHEET	DRAWING NO. 315
CADD E KRISTEL	08Y607	INSTRUMENTATION AND CONTROLS	182751
TECH. REVIEW: D ATURALIYE		FRIJOLES CANYON WATER DISTRIBUTION P&ID	PMIS/PKG NO. 266697
DATE: 04/11/2025		BANDELIER NATIONAL MONUMENT	SHEET 172 OF 203

3/25/2025 11:12 AM EKRISTEL R24_08Y607_D3167658.DWG XG-Binder_BANID

Item	Qty	Description	Manufacturer	Part Number	Comments
1	1	16" x 12" x 10" NEMA 12 Enclosure	Hoffman	A161210LP	Or Equal
2	1	Backpanel for A161210LP	Hoffman	A16P12	Or Equal
3	2	Fiber-Optic Patch Panel, 12 Strands, LC Connectors	Dinspace	SNAP-12LC-SM	Or Equal

Item	Line 1	Line 2	Line 3	Nameplate Size	Letter Size	Notes
A	BANDELIER	NIP-100		6"X2"	5/16"	
B	FPP-101			3"X1"	5/16"	
C	FPP-102			3"X1"	5/16"	

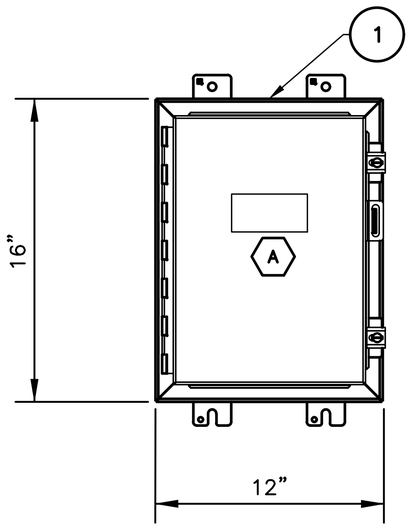

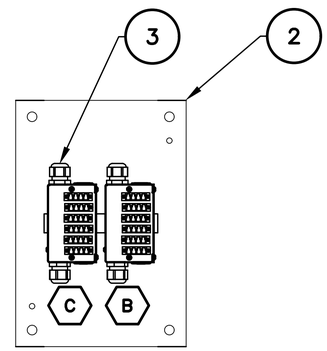

FULL SIZE DRAWINGS = 22"x34" 0" 1"
BAR MEASURES 1" LONG

JONATHAN B. JAMES
NEW MEXICO
18614
PROFESSIONAL ENGINEER

Digitally signed by Jonathan James
Date: 2025.04.11 12:35:34-06'00'

DESIGNED: A WILLIAMS	SUB SHEET NO.	TITLE OF SHEET	DRAWING NO. 315
CADD E KRISTEL	08Y608	INSTRUMENTATION AND CONTROLS FACILITY OPERATIONS CENTER NETWORK INTERFACE PANEL NIP–100 BANDELIER NATIONAL MONUMENT	182751
TECH. REVIEW: D ATURALIYE			PMIS/PKG NO. 266697
DATE: 04/11/2025			SHEET 173 OF 203

3/25/2025 11:12 AM EKRISTEL R24 08Y608_D3167658.DWG XG-Bandlr_BAND

Item	Qty	Description	Manufacturer	Part Number	Comments
1	1	42" x 24" x 12" NEMA 12 Enclosure	Hoffman	A422412LP	Or Equal
2	1	Backpanel for A422412LP	Hoffman	A42P24	Or Equal
3	1	Compact Logix, 16 DI, DO, 4 AI	Allen-Bradley	1769-L24ER-QBFC1B	Or Equal
4	1	Ethernet Switch, 8 1G Base TX Ports, 4 SFP Ports	Extreme Networks	16804	Or Equal
5	1	Remote Monitoring System	Mission Communications	MN853	
6	1	4 Analog Input Option Board	Mission Communications	OP465	
7	1	UPS, 500VA, 120VAC	Phoenix-Contact	1067327	Or Equal
8	1	Power Supply, 24VDC, 5A	Phoenix-Contact	2904600	Or Equal
9	AR	Circuit Breakers			
10	AR	Terminal Blocks			
11	AR	Fuse Blocks			
12	AR	Fuses			
13	AR	Panduit			
14	1	Panelview, 4" Touchscreen	Allen-Bradley	2711P-T4W21D8S	Or Equal

Item	Line 1	Line 2	Line 3	Nameplate Size	Letter Size	Notes
A	BANDELIER	LCP-400		6"X2"	5/16"	
B	PLC-400			3"X1"	5/16"	
C	FPP-401			3"X1"	5/16"	
D	FPP-402			3"X1"	5/16"	
E	OIT-400			3"X1"	5/16"	
F	NTSW-401	SCADA		3"X1"	5/16"	
G	RM-400			3"X1"	5/16"	
H	UPS			3"X1"	5/16"	
J	POWER SUPPLY			3"X1"	5/16"	
K	120 VAC			3"X1"	5/16"	
L	24 VDC			3"X1"	5/16"	
M	INPUTS/OUTPUTS			3"X1"	5/16"	

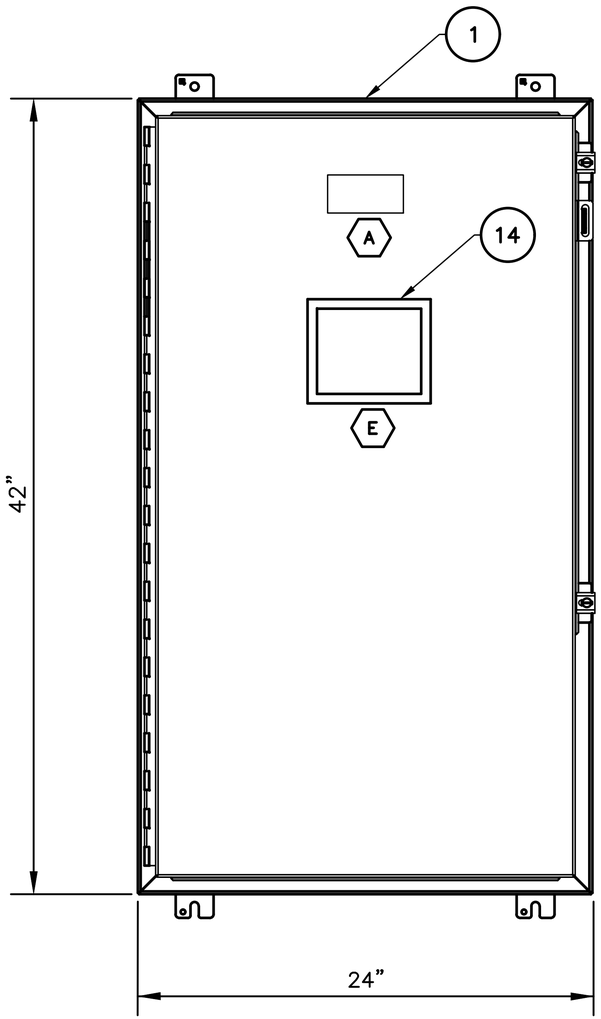

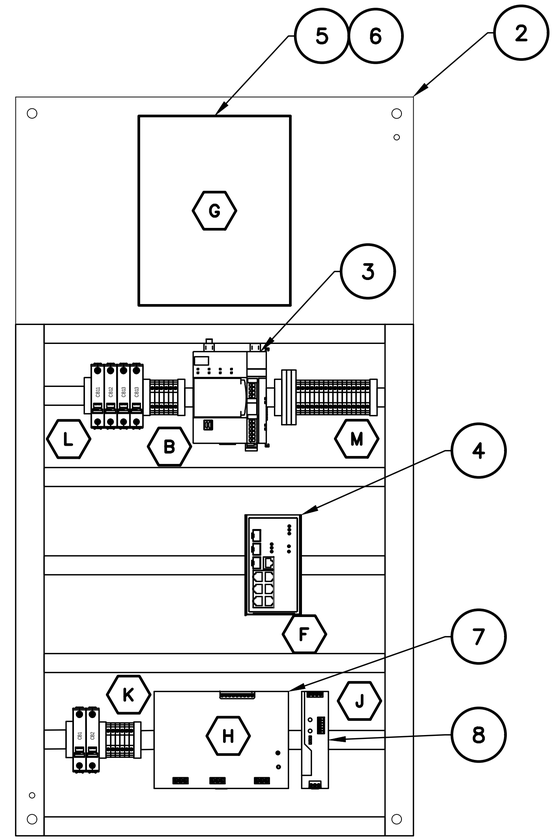

FULL SIZE DRAWINGS = 22"x34" 0" 1"
BAR MEASURES 1" LONG

JONATHAN B. JAMES
NEW MEXICO
18614
PROFESSIONAL ENGINEER

Digitally signed by Jonathan James
Date: 2025.04.11 12:35:35-06'00'

DESIGNED: A WILLIAMS	SUB SHEET NO.	TITLE OF SHEET INSTRUMENTATION AND CONTROLS ENTRANCE ROAD WATER TANK CONTROL PANEL LAYOUT LCP-400 BANDELIER NATIONAL MONUMENT	DRAWING NO. 315 182751
CADD E KRISTEL	08Y609		PMIS/PKG NO. 266697
TECH. REVIEW: D ATURALIYE			SHEET 174 OF 203
DATE: 04/11/2025			

3/31/2025 8:42 AM EKRISTEL P24 08Y609_D3167658.DWG XG-Border BAND

Item	Qty	Description	Manufacturer	Part Number	Comments
1	1	16" x 12" x 10" NEMA 12 Enclosure	Hoffman	A161210LP	Or Equal
2	1	Backpanel for A161210LP	Hoffman	A16P12	Or Equal
3	1	Fiber-Optic Patch Panel, 12 Strands, LC Connectors	Dinspace	SNAP-12LC-SM	Or Equal

Item	Line 1	Line 2	Line 3	Nameplate Size	Letter Size	Notes
A	BANDELIER	NIP-500		6"X2"	5/16"	
B	FPP-501			3"X1"	5/16"	

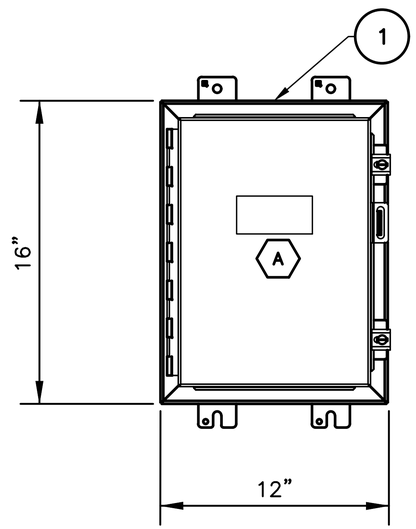

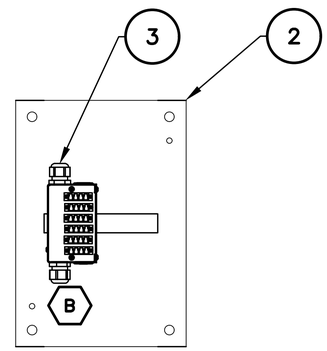

FULL SIZE DRAWINGS = 22"x34" 0" 1"
BAR MEASURES 1" LONG

JONATHAN B. JAMES
NEW MEXICO
18614
PROFESSIONAL ENGINEER

Digitally signed by Jonathan James
Date: 2025.04.11 12:35:36-06'00'

DESIGNED: A WILLIAMS	SUB SHEET NO.	TITLE OF SHEET	DRAWING NO. 315
CADD E KRISTEL	08Y610	INSTRUMENTATION AND CONTROLS PARK ENTRANCE STATION NETWORK INTERFACE PANEL NIP–500 BANDELIER NATIONAL MONUMENT	182751
TECH. REVIEW: D ATURALIYE			PMIS/PKG NO. 266697
DATE: 04/11/2025			SHEET 175 OF 203

3/25/2025 11:13 AM EKRISTEL R24 08Y610_D3167658.DWG XG-Bandlr_BAND

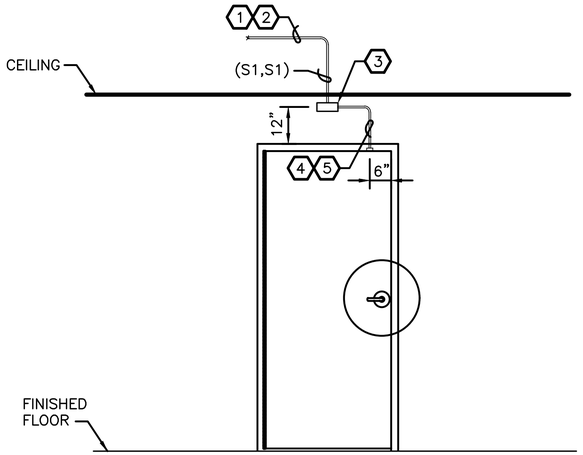

1. MINIMUM 1" CONDUIT FROM JUNCTION BOX TO SECURITY PANEL.
2. MOUNT 4" X 1" BACK HORIZONTALLY ON SECURED SIDE OF DOOR. MOUNT REQUEST TO EXIT DEVICE TO BACK BOX
3. ALL CONDUIT TO BE CONCEALED.
4. CONDUIT TO DOOR FRAME. CONDUIT MUST END 2" ABOVE DOOR FRAME AND PENETRATE ANY DOOR HEADERS. FLUSH MOUNT DOOR POSITION SENSOR.
5. IF DOOR IS ALUMINUM STOREFRONT CONSTRUCTION, WIRE TO BE CONCEALED IN ALUMINUM FRAMING. COORDINATE INSTALLATION OF WIRING WITH ALUMINUM FRAME INSTALLATION.

1 – SINGLE DOOR, DOOR POSITION SENSOR

NO SCALE

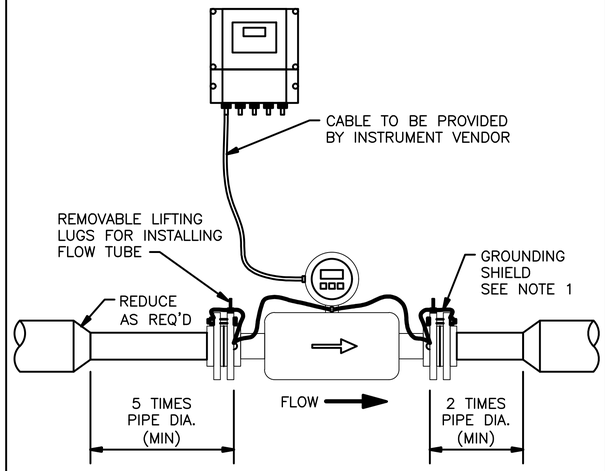

NOTES:

1. MEASURING ELECTRODES MUST BE IN HORIZONTAL PLANE.
2. TIE GROUND RINGS TO TRANSMITTER EQUIPMENT GROUND WITH A MINIMUM OF 12 AWG GROUND WIRE.

2 – FLOW TRANSMITTER - MAGNETIC

NO SCALE

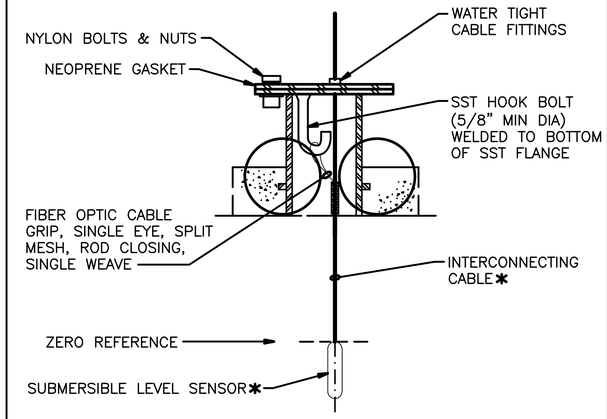

NOTES:

1. COMPONENTS DESIGNATED BY ✱ ARE SUPPLIED BY INSTRUMENT MANUFACTURER.
2. AN ATMOSPHERIC VENT IS INCLUDED IN THE MANUFACTURER SUPPLIED CABLE. ATTACH A KELLER DRYING TUBE PN 900001.00002 (OR EQUAL) TO THE VENT.

3 – SUBMERSIBLE LEVEL TRANSMITTER INSTALLATION

NO SCALE

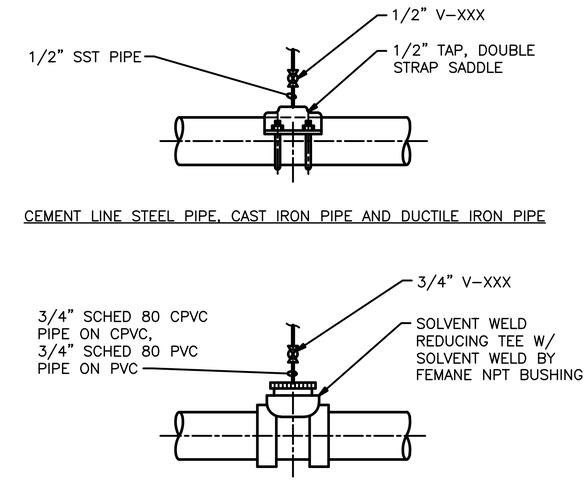

4 – PRESSURE CONNECTION INSTALLATION

NO SCALE

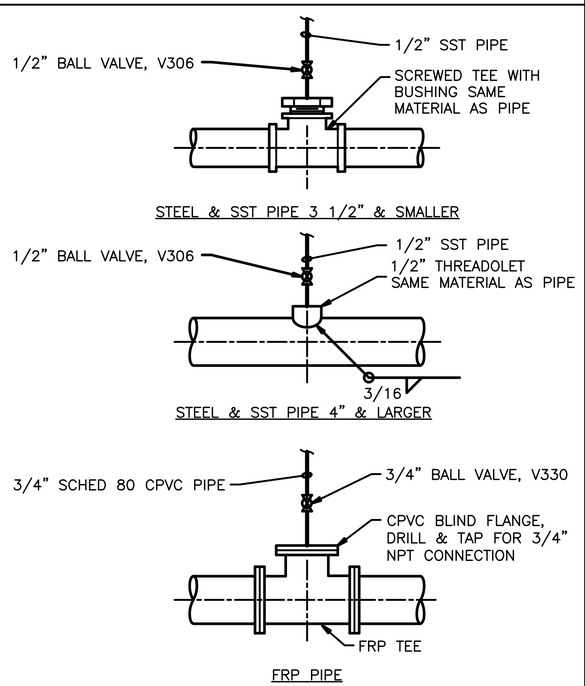

5 – PRESSURE CONNECTION INSTALLATION

NO SCALE

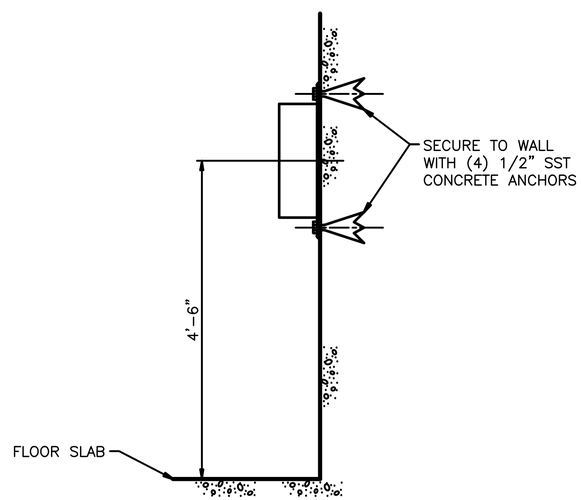

6 – WALL MOUNTED PANEL OR INSTRUMENT INSTALLATION

NO SCALE

FULL SIZE DRAWINGS = 22"x34" BAR MEASURES 1" LONG 0" 1"

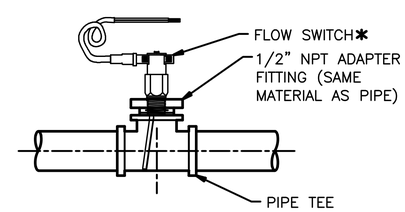

NOTES:

1. COMPONENTS DESIGNATED BY (✱) ARE SUPPLIED BY INSTRUMENT MANUACTURER.

7 – PADDLE FLOW SWITCH INSTALLATION

NO SCALE

JONATHAN B. JAMES NEW MEXICO 18614 PROFESSIONAL ENGINEER

Digitally signed by Jonathan James
Date: 2025.04.11 12:35:36-06'00'

DESIGNED: A WILLIAMS	SUB SHEET NO.	TITLE OF SHEET	DRAWING NO.
CADD E KRISTEL	08Y701	INSTRUMENTATION AND CONTROLS	315 182751
TECH. REVIEW: D ATURALIYE		DETAIL DRAWING	PMIS/PKG NO. 266697
DATE: 04/11/2025		BANDELIER NATIONAL MONUMENT	SHEET 176 OF 203

3/25/2025 11:13 AM EKRISTEL R24_08Y701_D3167658.DWG XG-Border_BAND

NOTES:

1. REFER TO MECHANICAL DRAWING 10M101 AND 10SM301, ELECTRICAL DRAWING 10E101, AND PLUMBING DRAWING 10P501 FOR ALL WALL PENETRATION LOCATIONS AND SIZES.
2. SEAL ANNULAR SPACE AROUND PENETRATIONS PER BUILDING MANUFACTURER'S REQUIREMENTS.
3. REFER TO SPECIFICATION SECTION 13 34 23 FABRICATED STRUCTURES FOR PERFORMANCE REQUIREMENTS FOR THE MECHANICAL BUILDING STRUCTURE.
4. REFER TO STRUCTURAL DRAWING 10SM301 FOR REINFORCED SLAB FOUNDATION DESIGN.
5. BUILDING IS EXEMPT FROM THERMAL ENVELOPE PROVISIONS PER C402.1.2.

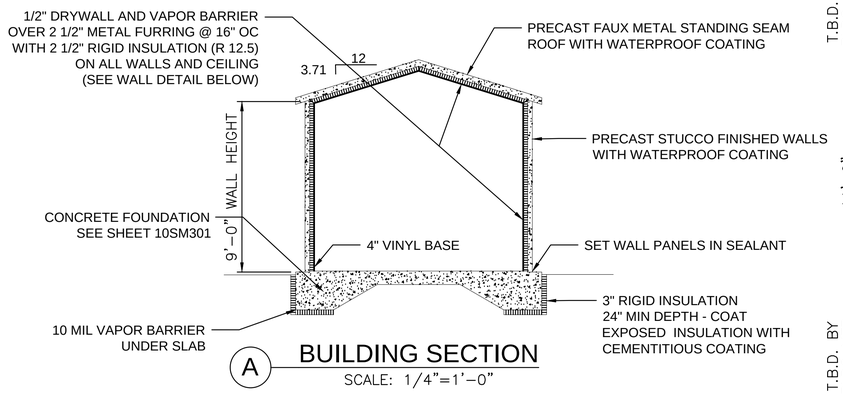

A BUILDING SECTION
SCALE: 1/4"=1'-0"

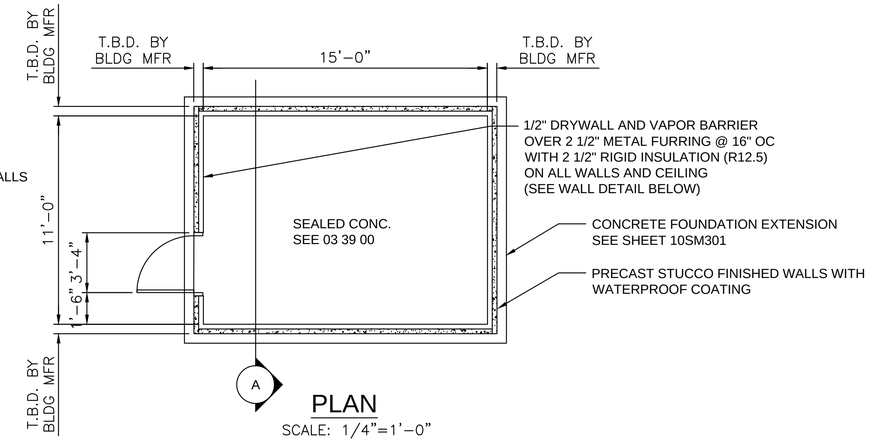

PLAN
SCALE: 1/4"=1'-0"

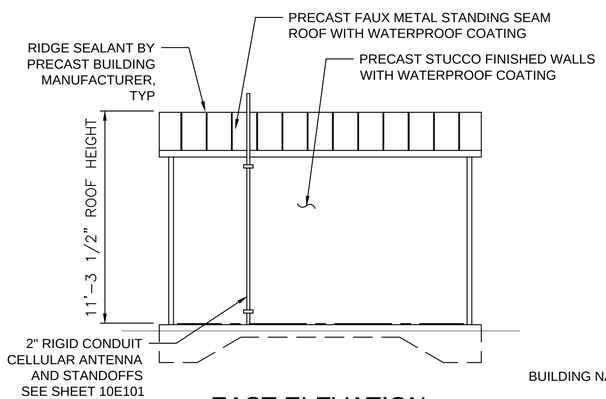

EAST ELEVATION
SCALE: 1/4"=1'-0"

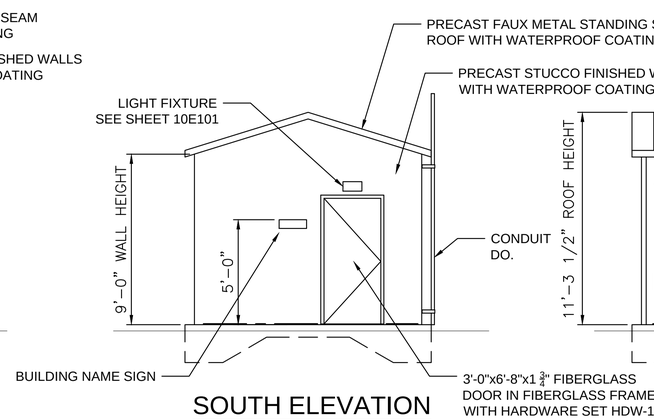

SOUTH ELEVATION
SCALE: 1/4"=1'-0"

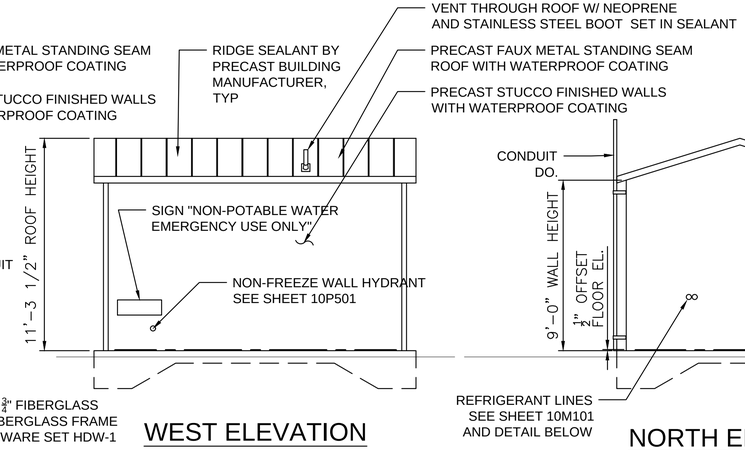

WEST ELEVATION
SCALE: 1/4"=1'-0"

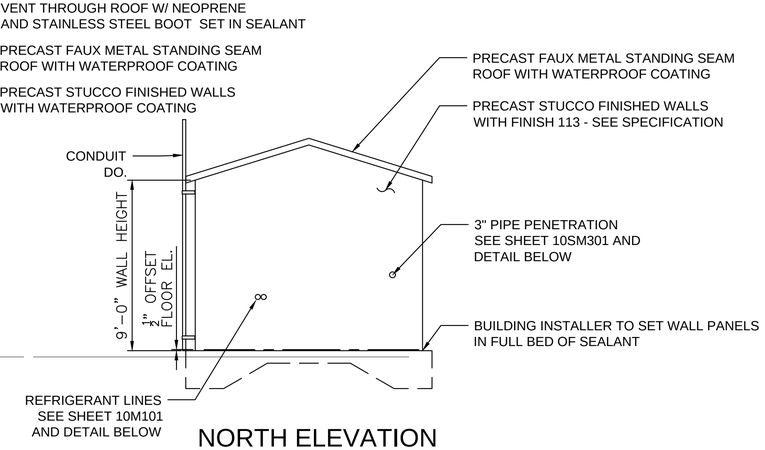

NORTH ELEVATION
SCALE: 1/4"=1'-0"

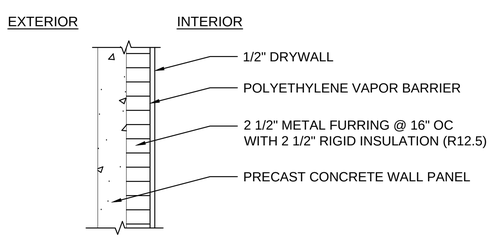

WALL DETAIL
SCALE: 1 1/2"=1'-0"

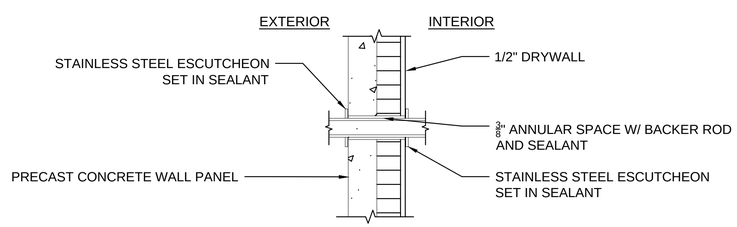

PENETRATION DETAIL
SCALE: 1 1/2"=1'-0"

FULL SIZE DRAWINGS = 22"x34" 0" 1"
BAR MEASURES 1" LONG

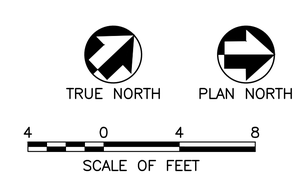

Thomas Paige
Thomas Paige 2025.04.10 11:26:30 -06'00'

THOMAS E. PAIGE NEW MEXICO 17930 PROFESSIONAL ENGINEER

DESIGNED: V MILEWSKI	SUB SHEET NO.	TITLE OF SHEET ARCHITECTURAL CANYON MECHANICAL BUILDING PLAN AND ELEVATIONS BANDELIER NATIONAL MONUMENT	DRAWING NO. 315
CADD D MICHALEK	10A101		182751
TECH. REVIEW: K HARGREAVES			PMIS/PKG NO. 266697
DATE: 04/11/2025			SHEET 177 OF 203

XG:Border_BAND
4/4/2025 11:17 AM smetcalf R24_010_A101_03167658.DWG X:\CDP\LA\ELEV

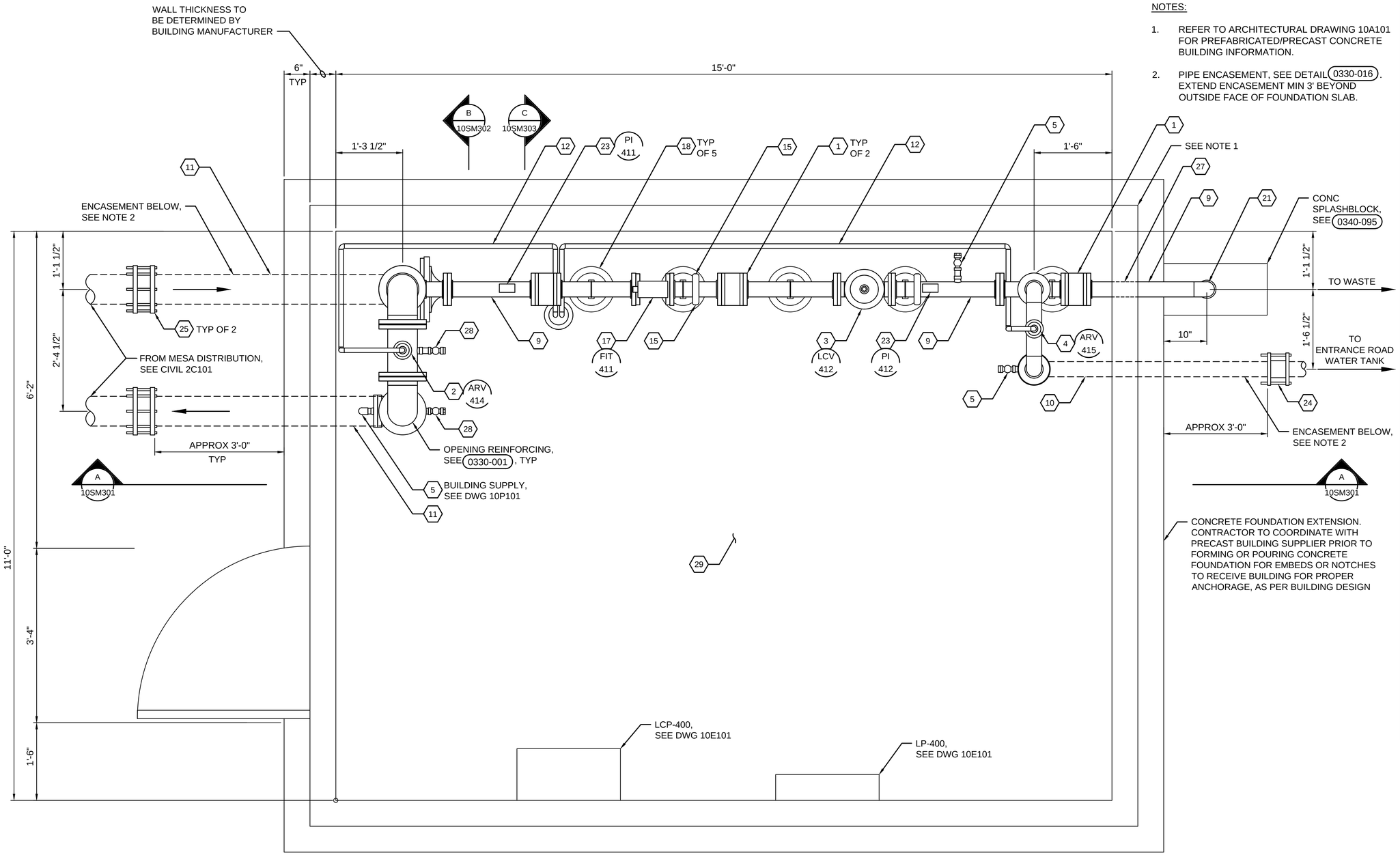

NOTES:

1. REFER TO ARCHITECTURAL DRAWING 10A101 FOR PREFABRICATED/PRECAST CONCRETE BUILDING INFORMATION.
2. PIPE ENCASEMENT, SEE DETAIL 0330-016. EXTEND ENCASEMENT MIN 3' BEYOND OUTSIDE FACE OF FOUNDATION SLAB.

MATERIAL SCHEDULE

ID	MATERIAL
1	3" BUTTERFLY VALVE V500
2	1" COMBINATION AIR AND VACUUM VALVE, V740
3	3" ELECTRONIC COMBINATION RATE OF FLOW CONTROL AND PRESSURE REDUCING VALVE WITH SOLENOID SHUTOFF, LCV 412
4	0.5" COMBINATION AIR AND VACUUM VALVE, V740
5	3/4" BALL VALVE, V300, SEE 4027-191 SIM
6	6" PRESSURE REDUCING VALVE, PCV 413
7	6" BUTTERFLY VALVE, V500
8	NOT USED
9	3" WELDED CARBON STEEL PIPE I/E FBE
10	3" DUCTILE IRON PIPE I/E FBE
11	6" DUCTILE IRON PIPE I/E FBE
12	1" PVC DRAIN
13	6" INSULATING FLANGE, SEE 2642-930 WITH PCR DEVICE
14	3" INSULATING FLANGE, SEE 2642-930 WITH PCR DEVICE
15	3" MECHANICAL GROOVED COUPLING
16	6" MECHANICAL GROOVED COUPLING
17	3" MAGNETIC FLOW METER, SEE DWG 08Y701
18	ADJUSTABLE PIPE SUPPORT, SEE 4005-500
19	NOT USED
20	FLOOR PIPE PENETRATION SEAL, SEE 4027-622
21	3" DUCKBILL CHECK VALVE
22	6" x 3" x 6" DUCTILE IRON TEE
23	PRESSURE GAUGE WITH ISOLATION VALVE, SEE 4090-690
24	3" BOLTED SLEEVE TYPE COUPLING (RESTRAINED)
25	6" BOLTED SLEEVE TYPE COUPLING (RESTRAINED)
26	NOT USED
27	SLEEVE IN PRECAST WALL, SEE 0341-510
28	PRESSURE TEST POINT, SEE 4027-194
29	CLEAR SEALER ON FLOOR. REFER TO SPECIFICATION 03 39 00.

INDICATES STANDARD DETAIL REFERENCES IN 15SM500 SERIES DRAWINGS

1 10SM901 B 10SM302 C 10SM303

PLAN
SCALE A

SCALE A 0 1 2 3 1" = 1'-0"
SCALE OF FEET

FULL SIZE DRAWINGS = 22"x34" 0" 1"
BAR MEASURES 1" LONG

Thomas Paige
Thomas Paige 2025.04.10 11:21:14 -06'00'

THOMAS E. PAIGE NEW MEXICO 17930 PROFESSIONAL ENGINEER

BRYAN WAYNE PINEZ NEW MEXICO 27845 PROFESSIONAL ENGINEER
04-09-2025

DESIGNED: J WICKS/ T PAIGE	SUB SHEET NO.	TITLE OF SHEET STRUCTURAL/MECHANICAL	DRAWING NO. 315 182751
CADD S METCALF	10SM101	CANYON MECHANICAL BUILDING FLOOR PLAN	PMIS/PKG NO. 266697
TECH. REVIEW: C. WEBSTER/ L. FEITKETHER		BANDELIER NATIONAL MONUMENT	SHEET 178 OF 203
DATE: 04/11/2025			

XG:Border_BAND 001_S00_24inx1_D3167658 10M010_D3167658.DWG 10M010_D3167658

4/4/2025 11:00 AM SMETCALFR24 010_SM101_D3167658.DWG

NOTES:

1. REFER TO DWG 10SM101 FOR KEYNOTES.

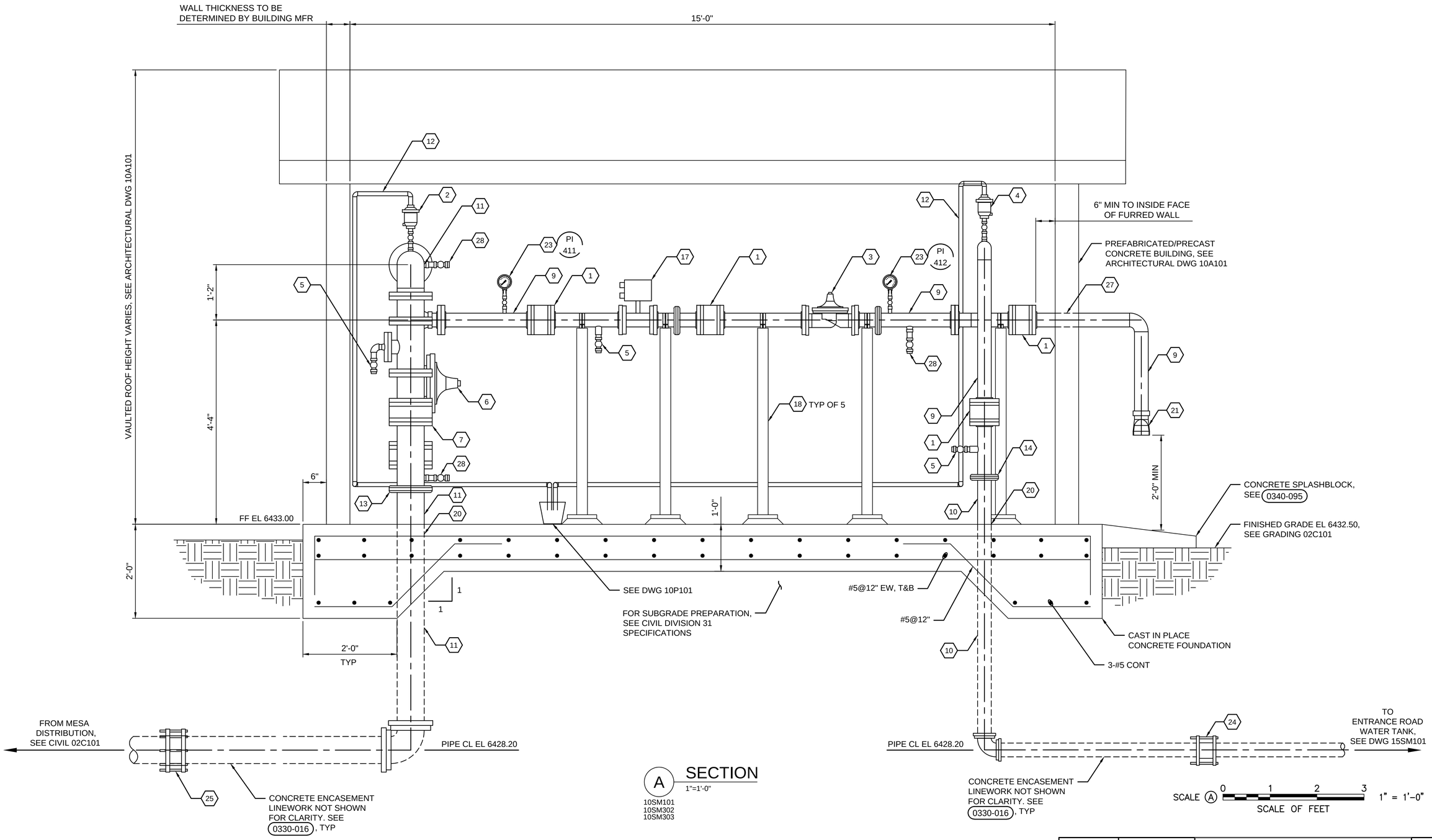

A SECTION
1"=1'-0"
10SM101
10SM302
10SM303

Thomas Paige
Thomas Paige 2025.04.10 11:21:52 -06'00'

THOMAS E. PAIGE NEW MEXICO 17930 PROFESSIONAL ENGINEER

BRYAN WAYNE PRICE NEW MEXICO 27845 PROFESSIONAL ENGINEER
04-09-2025

DESIGNED: J WICKS/ T PAIGE	SUB SHEET NO.	TITLE OF SHEET STRUCTURAL/MECHANICAL	DRAWING NO. 315 182751
CADD S METCALF	10SM301	CANYON MECHANICAL BUILDING SECTION 1 BANDELIER NATIONAL MONUMENT	PMIS/PKG NO. 266697
TECH. REVIEW: C. WEBSTER/ L. FETTKETHER			SHEET 179 OF 203
DATE: 04/11/2025			

XG Bridge: BANID
4/4/2025 11:00 AM SMETCALFR24 010_SM301_D3167658.DWG 003_S202_2ADN01_D3167658

NOTES:

1. REFER TO DWG 10SM101 FOR KEYNOTES.

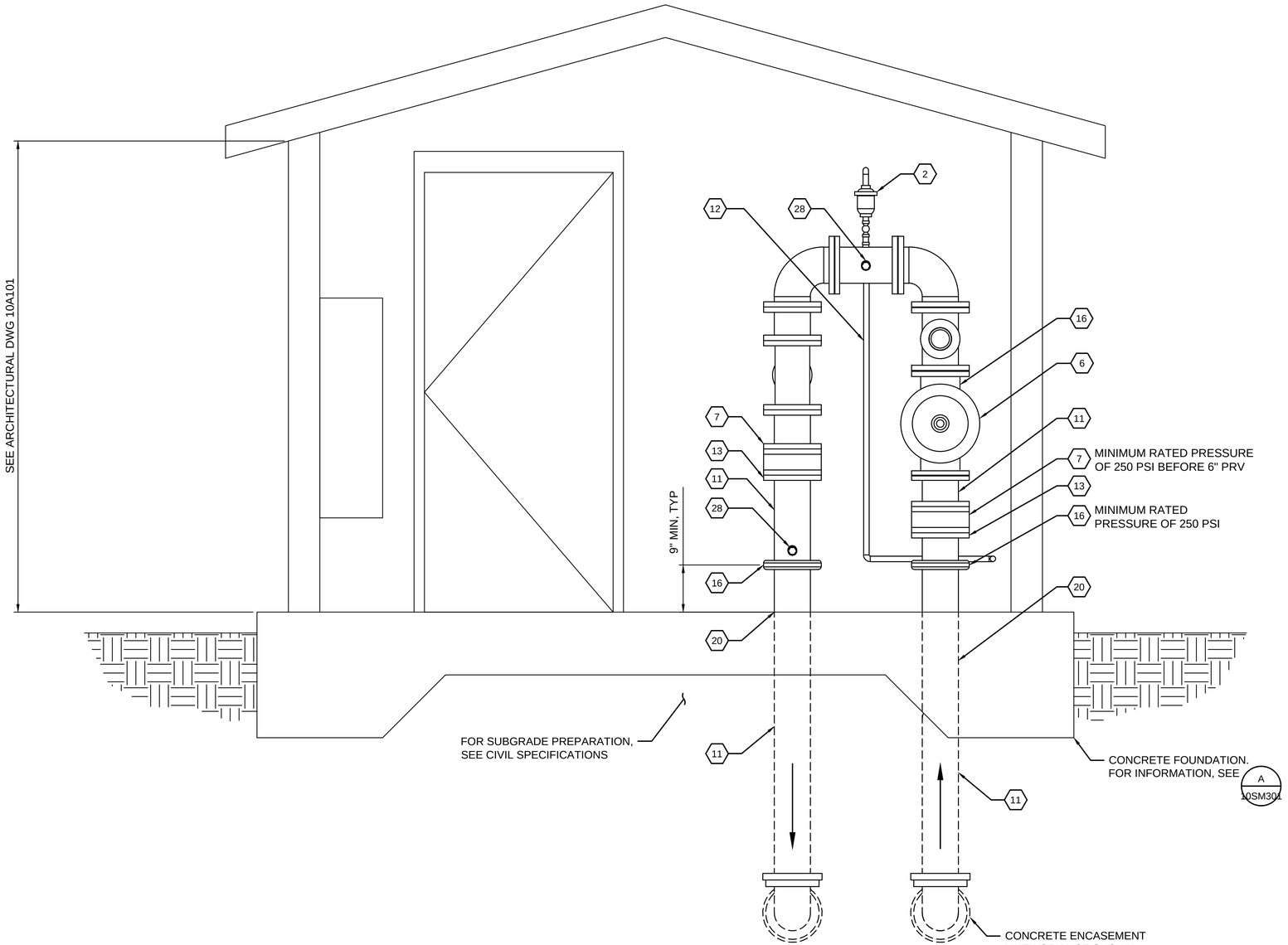

B SECTION
1"=1'-0"
10SM101

SCALE A 0 1 2 3 1" = 1'-0"
SCALE OF FEET

Thomas Paige
Thomas Paige
2025.04.10
11:22:08 -06'00'

THOMAS E. PAIGE NEW MEXICO 17930 PROFESSIONAL ENGINEER

BRYOR WAYNE PRICE NEW MEXICO 27845 PROFESSIONAL ENGINEER
04-09-2025

FULL SIZE DRAWINGS = 22"x34" 0" 1"
BAR MEASURES 1" LONG

DESIGNED: J WICKS/ T PAIGE	SUB SHEET NO.	TITLE OF SHEET STRUCTURAL/MECHANICAL	DRAWING NO. 315 182751
CADD S METCALF	10SM302	CANYON MECHANICAL BUILDING SECTION 2 BANDELIER NATIONAL MONUMENT	PMIS/PKG NO. 266697
TECH. REVIEW: C. WEBSTER/ L. FETTKETHER			SHEET 180 OF 203
DATE: 04/11/2025			

4/4/2025 11:02 AM SMETCALFR24 010_SM302_D3167658.DWG 001_S302_S0V01_D3167658 XG Bartex BAND

NOTES:

1. REFER TO DWG 10SM101 FOR KEYNOTES.

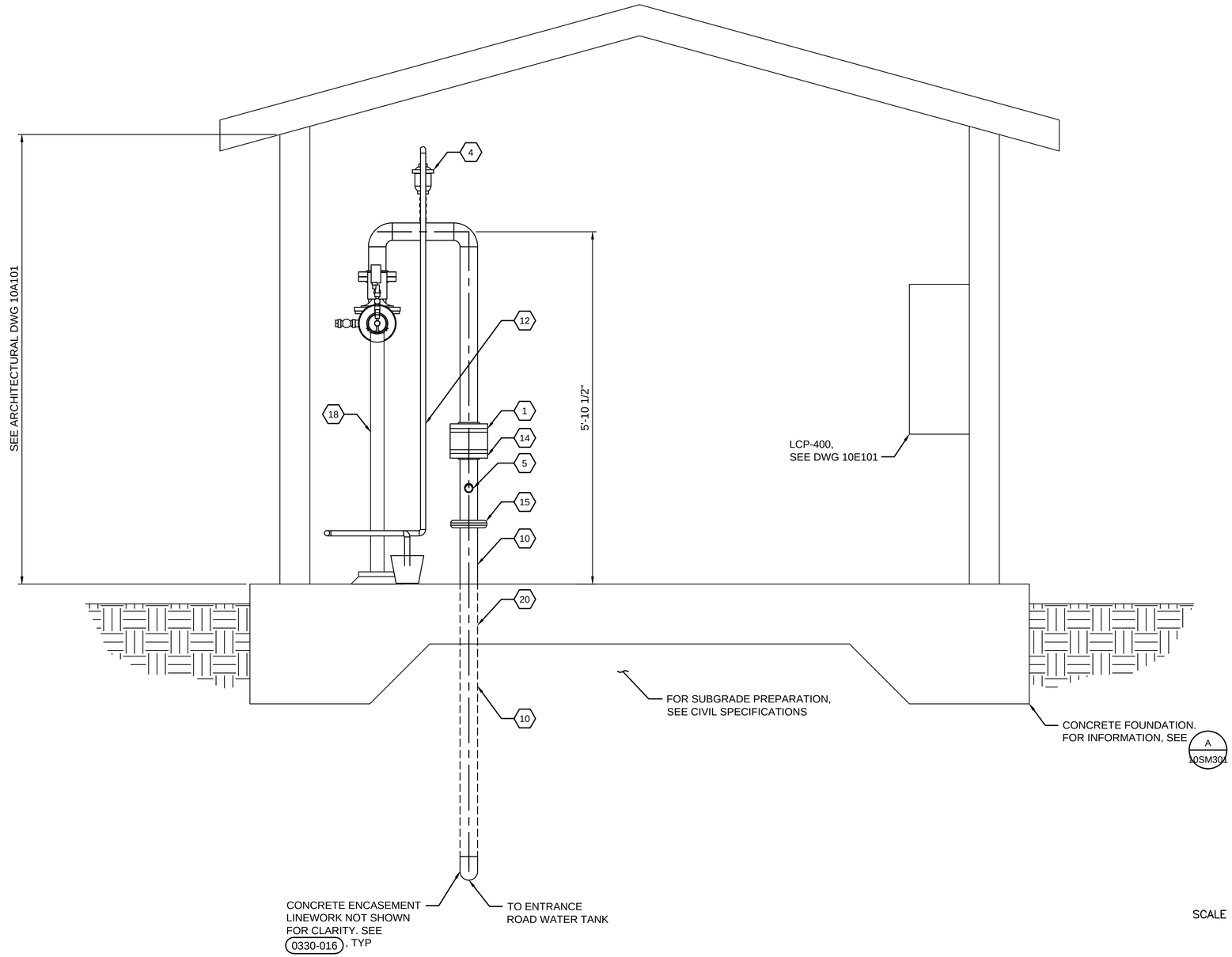

C SECTION
1"=1'-0"
10SM101

SCALE A 0 1 2 3 1" = 1'-0"
SCALE OF FEET

Thomas Paige
Thomas Paige
2025.04.10
11:22:25 -06'00'

THOMAS E. PAIGE
NEW MEXICO
17930
PROFESSIONAL ENGINEER

BRYDON WAYNE PRICE
NEW MEXICO
27845
PROFESSIONAL ENGINEER
04-09-2025

FULL SIZE DRAWINGS = 22"x34" 0" 1"
BAR MEASURES 1" LONG

DESIGNED: J WICKS/ T PAIGE	SUB SHEET NO.	TITLE OF SHEET STRUCTURAL/MECHANICAL	DRAWING NO. 315 182751
CADD S METCALF	10SM303	CANYON MECHANICAL BUILDING SECTION 3 BANDELIER NATIONAL MONUMENT	PMIS/PKG NO. 266697
TECH REVIEW: C. WEBSTER/ L. FETTKETHER			SHEET 181 OF 203
DATE: 04/11/2025			

4/4/2025 11:03 AM SMETCALFR24 010_SM303_D3167658.DWG 010_SR02_24V01_D3167658 XCE-Border_BAND

NOTES:

1. REFER TO DWG 10SM101 FOR KEYNOTES.

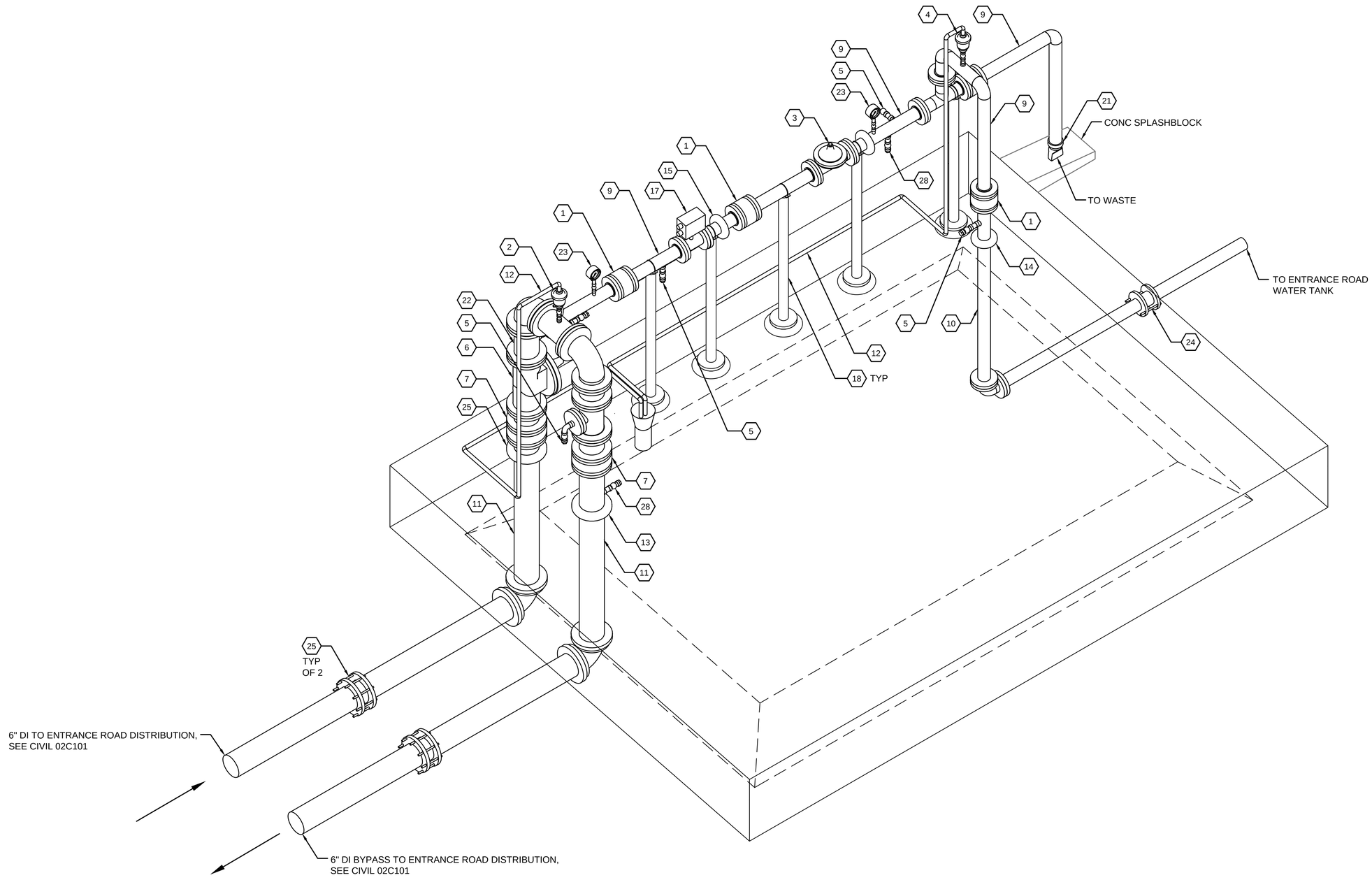

NOTES:

1. WALLS AND ROOF OF THE CANYON MECHANICAL BUILDING HAVE BEEN REMOVED ON THE ISOMETRIC DRAWING FOR CLARITY.

1 ISOMETRIC
NTS
010SM101

FULL SIZE DRAWINGS = 22"x34" 0" 1"
BAR MEASURES 1" LONG

BRYOR WAYNE PRICE
NEW MEXICO
27845
PROFESSIONAL ENGINEER
04-09-2025

DESIGNED: J WICKS CADD: S METCALF TECH. REVIEW: C. WEBSTER/ L. FETTKETHER DATE: 04/11/2025	SUB SHEET NO. 10SM901	TITLE OF SHEET PROCESS MECHANICAL CANYON MECHANICAL BUILDING ISOMETRIC BANDELIER NATIONAL MONUMENT	DRAWING NO. 315 182751 PMIS/PKG NO. 266697 SHEET 182 OF 203

4/4/2025 11:04 AM SMETCALFR24 010_SM901_D3167658.DWG XG-Border_BAND

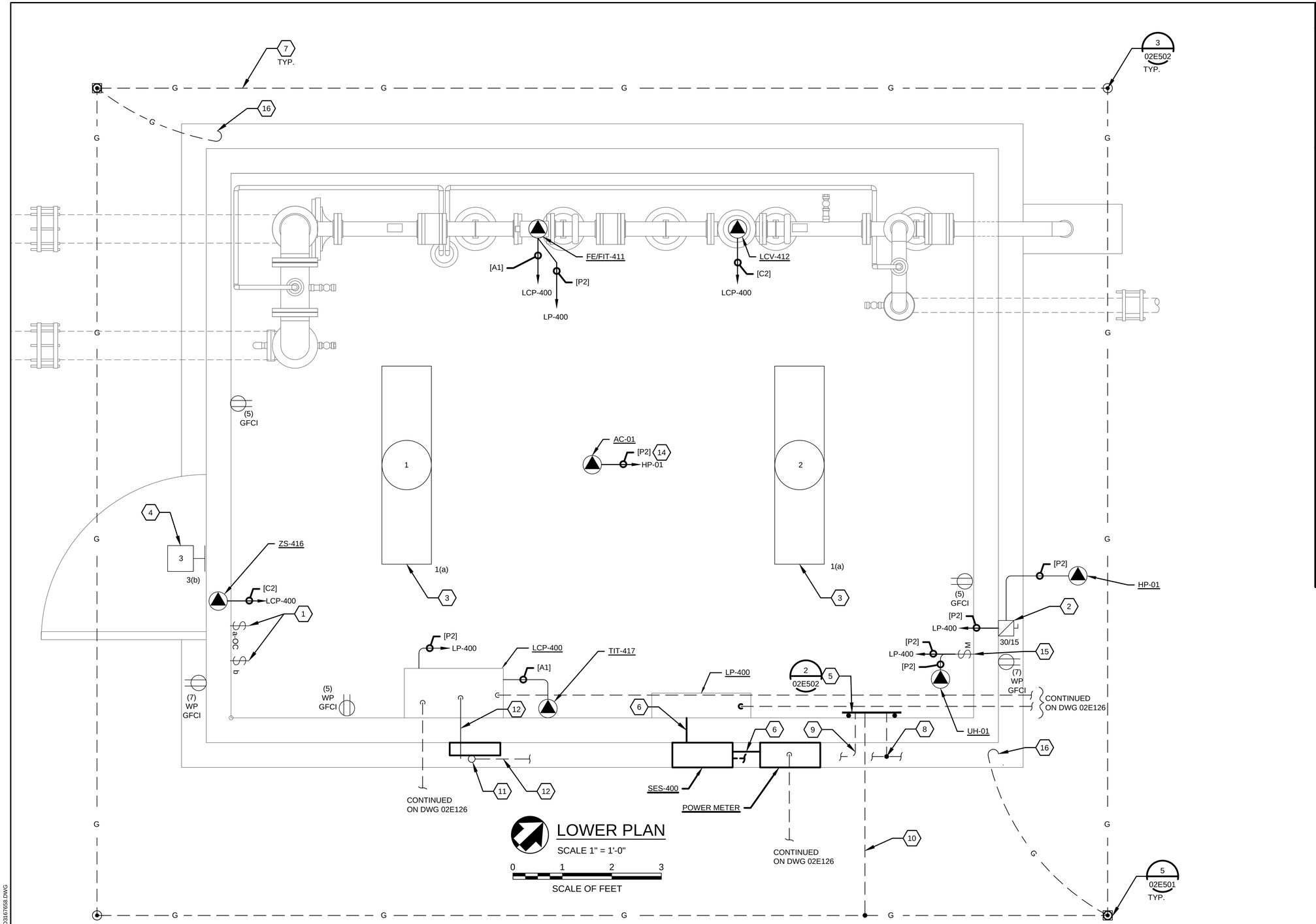

LOWER PLAN

SCALE 1" = 1'-0"

0 1 2 3

SCALE OF FEET

GENERAL NOTES

1. REFER TO GENERAL DRAWINGS FOR LEGENDS, NOTES, AND ABBREVIATIONS.
2. SUPPLY RECEPTACLES AND LIGHTING FROM THE INDICATED CIRCUIT IN PANEL LP-400. PROVIDE [3/4"C, 2#12, 1#12G] UNLESS SHOWN OTHERWISE. FIELD ROUTE TO LIGHTING CONTROLS AND PANEL.
3. REFER TO PANEL SCHEDULES FOR CIRCUIT INFORMATION.

SHEET KEYNOTES

1. MOUNT LIGHTING CONTROLS ON LATCH SIDE OF DOOR.
2. WALL MOUNT 2-POLE FUSED DISCONNECT AT 48 INCHES ABOVE FINISHED GRADE. PROVIDE FUSES COORDINATED WITH HVAC EQUIPMENT.
3. CEILING MOUNT INTERIOR LIGHTS.
4. WALL MOUNT EXTERIOR LIGHT CENTERED ABOVE DOOR.
5. MOUNT GROUND BUS 12 INCHES ABOVE FINISHED FLOOR.
6. SEE ONE-LINE DIAGRAM ON DRAWING 10E601 FOR CONDUIT AND CONDUCTOR SIZE.
7. #4/0 BURIED GROUND RING, 36" MINIMUM BELOW GRADE AND 36" MINIMUM FROM FOUNDATION.
8. #4/0 BOND TO FOUNDATION REBAR.
9. BOND TO SERVICE ENTRANCE DISCONNECT.
10. #4/0 BOND TO BUILDING GROUND BUS.
11. 2-INCH RIGID CONDUIT CELLULAR ANTENNA ATTACHED TO BUILDING EXTERIOR. EXTEND MAST 3 FEET ABOVE BUILDING ROOF. PROVIDE STAND-OFF BRACKETS AS REQUIRED.
12. BOND ANTENNA MAST TO BUILDING GROUND SYSTEM WITH #6 AWG BONDING CONDUCTOR.
13. STUB 1-INCH CONDUIT FROM LCP TO BUILDING EXTERIOR ADJACENT TO MAST FOR ANTENNA CABLES. PROVIDE CABLE SEAL FITTING SIZED FOR ANTENNA CABLE.
14. COORDINATE WITH HVAC INSTALLER TO CONFIRM CONDUCTOR REQUIREMENTS.
15. UNIT DISCONNECT PROVIDED BY HVAC SUPPLIER.
16. PROVIDE #4/0 GROUNDING PIGTAIL FROM TEST WELL. COIL 48" MINIMUM PIGTAIL ABOVE GRADE AND SECURE TO BUILDING EXTERIOR. FUTURE LIGHTINING PROTECTION SYSTEM BY OTHERS.

FULL SIZE DRAWINGS = 22"x34" 0" 1"
BAR MEASURES 1" LONG

JONATHAN B. JAMES
NEW MEXICO
18614
PROFESSIONAL ENGINEER

Digitally signed by Jonathan James
Date: 2025.04.11 12:33:38-06'00'

DESIGNED: J. JAMES	SUB SHEET NO.	TITLE OF SHEET	DRAWING NO.
CADD I. KHAN	10E101	ELECTRICAL	315 / 182751
TECH. REVIEW: J. LANDMAN		CANYON MECHANICAL BLDG. FLOOR PLAN	PMIS/PKG NO. 266697
DATE: 04/11/2025		BANDELIER NATIONAL MONUMENT	SHEET 183 OF 203

3/25/2025 12:11 PM ACUGLIAT R24 10E101_D3167656.DWG

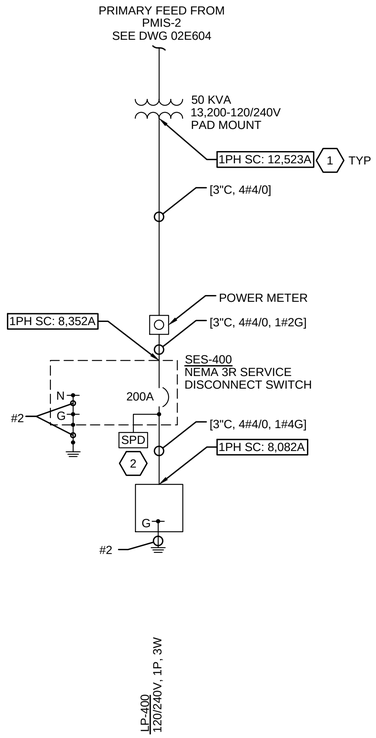

CANYON MECHANICAL BUILDING ONE-LINE DIAGRAM

NTS

LUMINAIRE SCHEDULE

TYPE	LIGHT SOURCE	INPUT VOLTAGE	INPUT WATTS	OUTPUT LUMENS	CRI	EXPECTED LIFE	COLOR TEMPERATURE CCT	MOUNTING	LISTING & CERTIFICATION	DEVICE CHARACTERISTICS	MANUFACTURER (OR EQUAL)	
											NAME	PRODUCT NUMBER
1	LED	120-277	26	2875 (1400 EM)	80	L80 60K	4000K	CEILING	UL 924 UL 1598 UL 2108 WET LOCATION IP67/NEMA 4X BAA/TAA	4' LINEAR LED, ENCLOSED & GASKETED, FIBERGLASS HOUSING, FROSTED RIBBED POLYCARBONATE LENS, STAINLESS STEEL LATCHES, FIXED OUTPUT DRIVER, EMERGENCY BATTERY PACK, MICROWAVE OCCUPANCY SENSOR,	COLUMBIA LIGHTING	LXEM4-40MW-RFP-EU-ELL14-OCM-SSL
2	LED	120-277	26	2875	80	L80 60K	4000K	CEILING	UL 1598 UL 2108 WET LOCATION IP67/NEMA 4X BAA/TAA	4' LINEAR LED, ENCLOSED & GASKETED, FIBERGLASS HOUSING, FROSTED RIBBED POLYCARBONATE LENS, STAINLESS STEEL LATCHES, FIXED OUTPUT DRIVER, MICROWAVE OCCUPANCY SENSOR,	COLUMBIA LIGHTING	LXEM4-40MW-RFP-EU-OCM-SSL
3	LED	120-277	17	1449	N/A	N/A	MONOCHROME AMBER	WALL	UL 1598 UL 2108 WET LOCATION IP65 BAA/TAA	FULL CUTOFF WALL PACK TRUE-AMBER LED, TYPE IV FORWARD DISTRIBUTION, BLACK MATTE POWDER COATED ALUMINUM HOUSING, FWC WILDLIFE FRIENDLY	COLUMBIA LIGHTING	QSP2-36L-15-AM-4F-UNV-BLT-PC-12F-SF

GENERAL NOTES

1. REFER TO GENERAL DRAWINGS FOR LEGENDS, NOTES, AND ABBREVIATIONS.

SHEET KEYNOTES

1. CALCULATED FAULT (SHORT CIRCUIT) CURRENT BASED ON INDICATED TRANSFORMERS AND CONDUCTORS SIZES.
2. MOUNT SURGE PROTECTIVE DEVICE EXTERNAL TO SERVICE ENTRANCE ENCLOSURE.

PANEL NAME: LP-400
SERVICE VOLTAGE: 120/240
TOTAL LOAD KVA: 8.3
ENCLOSURE TYPE: 1
REMARKS:

LOCATION: CANYON MECHANICAL BUILDING
PHASE: 1 WIRE: 3 SCCR: 10,000
BUS SIZE: 225A MAIN SIZE: 200A TYPE: BRKR
NEUTRAL: FULL MOUNTING: SURFACE
SOURCE: SES-400

LOAD IN VA A	LOAD IN VA B	CIRCUIT DESCRIPTION	BKR A/P	CK NO.	CK NO.	BKR A/P	CIRCUIT DESCRIPTION	LOAD IN VA A	LOAD IN VA B
100		INTERIOR LIGHTS	20/1	1	2	20/1	FIT-411	50	
	50	EXTERIOR LIGHT	20/1	3	4	20/2	HP-01 / AC-01		1581
540		INTERIOR RECEPTACLES	20/1	5	6		AIR COND & HEAT PUMP	1581	
	540	EXTERIOR RECEPTACLES	20/1	7	8	20/2	UH-01		1500
360		TANK RECEPTACLES	20/1	9	10		ELECTRIC HEATER (3KW)	1500	
		SPARE	20/1	11	12	20/1	LCP-400 CONTROL PANEL		500
		SPARE	20/1	13	14	20/1	SPARE		
		SPARE	20/1	15	16	20/1	SPARE		
		SPARE	20/1	17	18	20/1	SPARE		
		SPACE	-	19	20	-	SPACE		
		SPACE	-	21	22	-	SPACE		
		SPACE	-	23	24	-	SPACE		
		SPACE	-	25	26	-	SPACE		
		SPACE	-	27	28	-	SPACE		
		SPACE	-	29	30	-	SPACE		
1000	590	TOTALS						3131	3581

PANEL NOTES:
1. PROVIDE NEW CIRCUIT BREAKER.

PANEL LOAD CALCULATION

ACTUAL VA	DEMAND	DEMAND	
			NON-CONTINUOUS LOADS
1440	1.00	1440	RECEPTACLES
6162	1.00	6162	APPLIANCES
50	1.00	50	OTHER
7652	**-**	**7652**	**SUBTOTAL**
			CONTINUOUS LOADS
150	1.25	188	GENERAL LIGHTING
500	1.25	625	CONTROL PANELS
650	**-**	**813**	**SUBTOTAL**
			MOTOR LOADS
0	1.25	0	LARGEST MOTOR
0	1.00	0	REMAINING MOTORS
0	**-**	**0**	**SUBTOTAL**
			TOTAL LOADS
8302	**-**	**8465**	**VA**
35	**-**	**35**	**AMPS @ 240V**

	PHASE A	PHASE B	
PHASE LOADING	4131	4171	
	MIN	**ACTUAL**	**STATUS**
FEEDER AMPACITY	**35**	**230**	**OK**
MAIN/UPSTREAM OC DEVICE	**44**	**200**	**OK**

NOTES:

FULL SIZE DRAWINGS = 22"x34" 0" 1"
BAR MEASURES 1" LONG

JONATHAN B. JAMES NEW MEXICO 18614 PROFESSIONAL ENGINEER
Digitally signed by Jonathan James
Date: 2025.04.11 12:33:39-06'00'

DESIGNED:	SUB SHEET NO.	TITLE OF SHEET	DRAWING NO.
J. JAMES	10E601	ELECTRICAL CANYON MECHANICAL BLDG ONE-LINE DIAGRAM AND SCHEDULES BANDELIER NATIONAL MONUMENT	315 182751
CADD I. KHAN			PMIS/PKG NO. 266697
TECH. REVIEW: J. LANDMAN			SHEET 184 OF 203
DATE: 04/11/2025			

3/25/2025 12:12 PM ACUGUAT R24 10E601_D3167640.DWG XG Border_BAND

NOTES:

1. OUTDOOR REFRIGERANT PIPING TO BE INSULATED WITH FLEXIBLE ELASTOMERIC INSULATION; PROTECTED BY UV AND WEATHER RESISTANT PVC JACKET.
2. 4" CONCRETE PAD TO BE PROVIDED FOR HP-01.
3. HP-01 TO BE MOUNTED ON 16" STEEL STAND.
4. (4) 4" x 4" x ⅞" VIBRATION ISOLATION PADS TO BE INSTALLED FOR HP-01.
5. UNIT HEATER MUST BE MOUNTED AT LEAST 7 FT. ABOVE THE FLOOR.

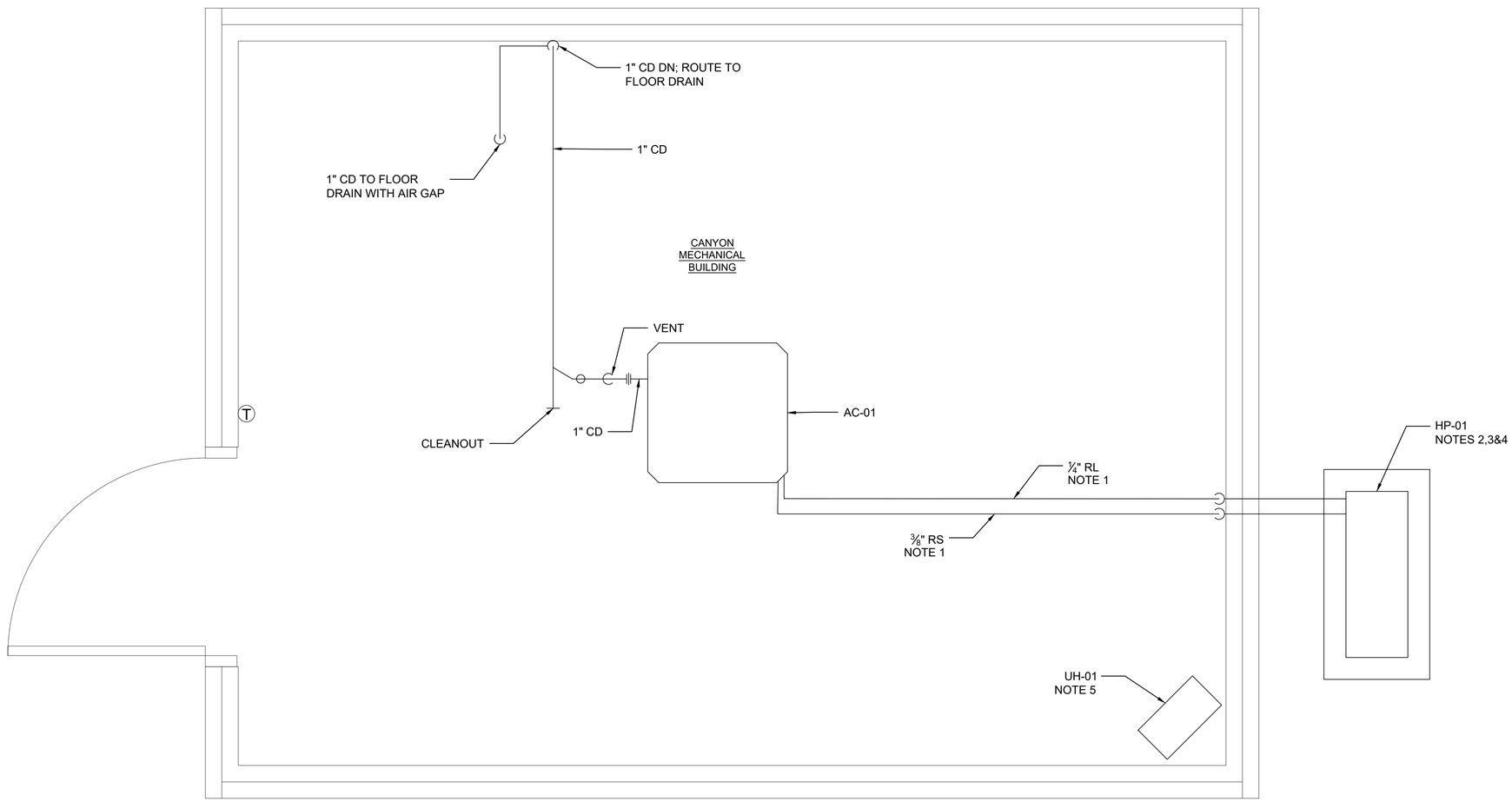

MECHANICAL FLOOR PLAN

SCALE: 1" = 1'-0"

12" 6" 0' 1' 2' 3'
1" = 1'-0"

FULL SIZE DRAWINGS = 22"x34" 0" 1"
BAR MEASURES 1" LONG

Gregory Scott Hinte
2025.04.08
14:19:20-05'00'

GREGORY SCOTT HINTE
NEW MEXICO
18049
PROFESSIONAL ENGINEER

DESIGNED: S HINTE	SUB SHEET NO.	TITLE OF SHEET	DRAWING NO.
CADD M B STEWART	10M101	MECHANICAL/HVAC CANYON MECHANICAL BUILDING FLOOR PLAN	315
TECH. REVIEW: P BAKER			182751
DATE: 04/11/2025		BANDELIER NATIONAL MONUMENT	PMIS/PKG NO. 266697
			SHEET 185 OF 203

XG-Border_BAND
XA-DBB-PLAN
XA-DBB-ELEV
XA-DBB-SEC

3/25/2025 7:52 AM ANDREWRIE24 10M101_D3167658.DWG

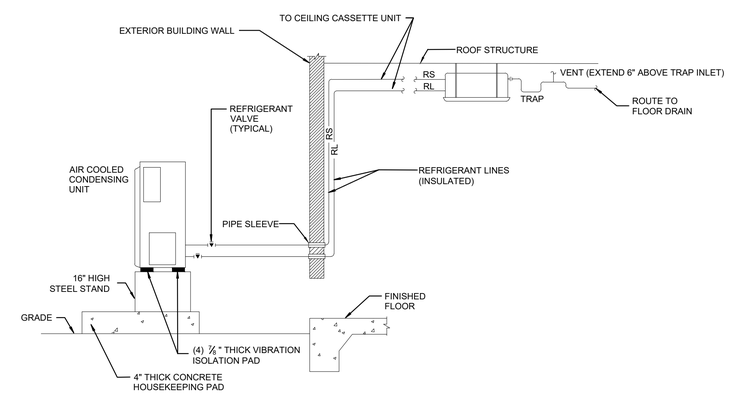

1 / 10M501 TYPICAL SPLIT SYSTEM WITH CEILING CASSETTE UNIT DETAIL

NOT TO SCALE

FULL SIZE DRAWINGS = 22"x34" 0" 1"
BAR MEASURES 1" LONG

Gregory Scott Hinte
2025.04.08
14:20:31-05'00'

GREGORY SCOTT HINTE
NEW MEXICO
18049
PROFESSIONAL ENGINEER

DESIGNED: S HINTE	SUB SHEET NO.	TITLE OF SHEET	DRAWING NO.
CADD M B STEWART	10M501	MECHANICAL/HVAC CANYON MECHANICAL BUILDING MECHANICAL DETAILS	315 182751
TECH. REVIEW: P BAKER			PMIS/PKG NO. 266697
DATE: 04/11/2025		BANDELIER NATIONAL MONUMENT	SHEET 186 OF 203

3/25/2025 7:54 AM ANDREVRR24 10M501_D3167658.DWG XG-Seed_BAND for sheets
XG-Border_BAND

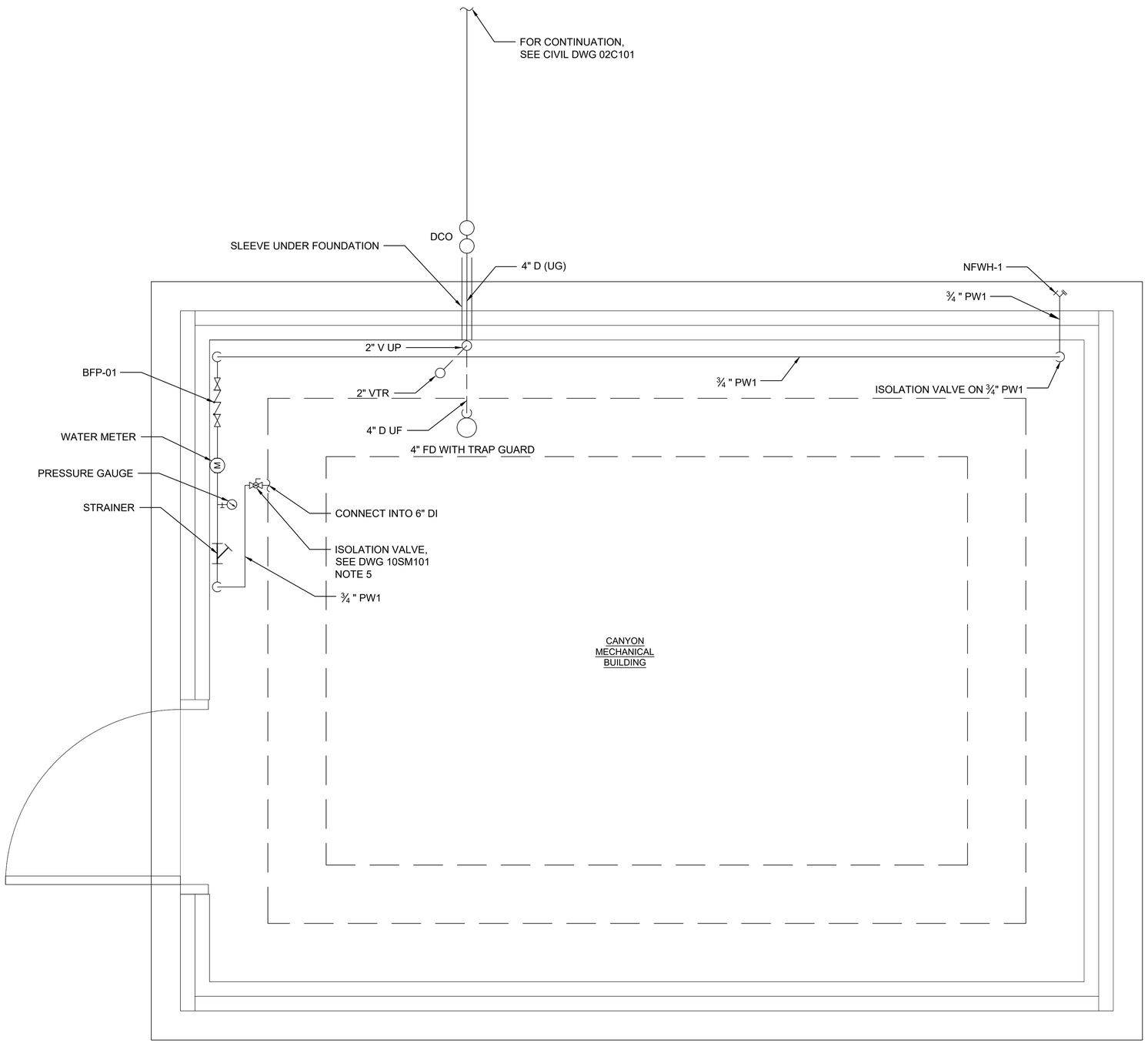

PLUMBING FLOOR PLAN

SCALE: 1" = 1'-0"

12" 6" 0' 1' 2' 3'

1" = 1'-0"

FULL SIZE DRAWINGS = 22"x34" 0" 1"
BAR MEASURES 1" LONG

Gregory Scott Hinte
2025.04.08
14:21:27-05'00'

GREGORY SCOTT HINTE
NEW MEXICO
18049
PROFESSIONAL ENGINEER

DESIGNED: S HINTE	SUB SHEET NO.	TITLE OF SHEET PLUMBING CANYON MECHANICAL BUILDING FLOOR PLAN	DRAWING NO. 315
CADD: M B STEWART	10P101		182751
TECH. REVIEW: P BAKER			PMIS/PKG NO. 266697
DATE: 04/11/2025		BANDELIER NATIONAL MONUMENT	SHEET 187 OF 203

XG-Border_BAND
XG-Seed_BAND for sheets
XA-CB-PLAN-ELEV
XA-UBB-PLAN

3/25/2025 7:54 AM ANDREWRIE24 10P101_D3167658.DWG

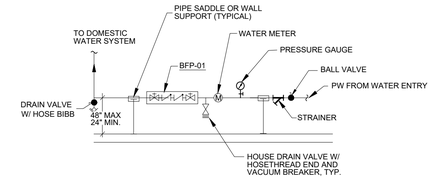

NOTES:
1. SIZE OF DOUBLE CHECK VALVE BACKFLOW PREVENTER SHALL BE LINE SIZE.

3 / 10P501 DOUBLE CHECK BACKFLOW PREVENTER DETAIL

NOT TO SCALE

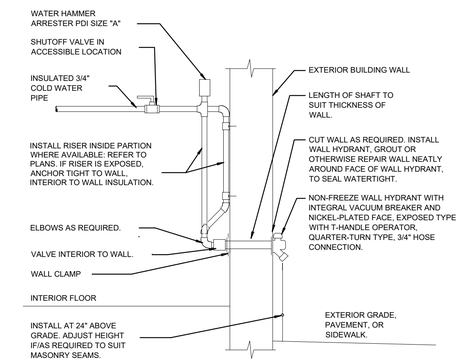

2 / 10P501 NON-FREEZE WALL HYDRANT DETAIL

NOT TO SCALE

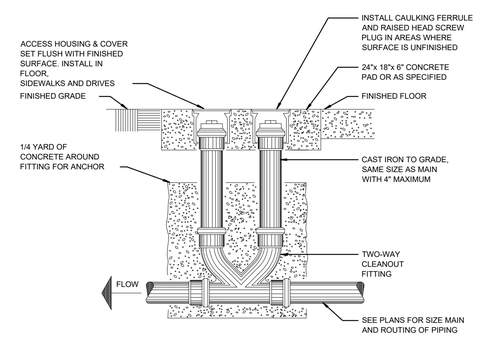

4 / 10P501 DOUBLE (TWO-WAY) CLEANOUT DETAIL

NOT TO SCALE

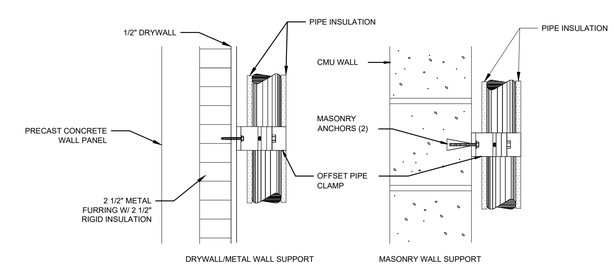

NOTE:
MASONRY ANCHOR SHALL BE EPOXY ADHESIVE TYPE WITH A MINIMUM CAPACITY OF 150 POUND AND SHEAR CAPACITY OF 300 POUND. SUBMIT MANUFACTURER'S DATA FOR APPROVAL

1 / 10P501 TYPICAL PIPING WALL SUPPORT DETAIL

NOT TO SCALE

FULL SIZE DRAWINGS = 22"x34" 0" 1"
BAR MEASURES 1" LONG

GREGORY SCOTT HINTE
NEW MEXICO
18049
PROFESSIONAL ENGINEER

Gregory Scott Hinte
2025.04.08
14:18:44-05'00'

DESIGNED: S HINTE	SUB SHEET NO.	TITLE OF SHEET
CADD M B STEWART	10P501	PLUMBING CANYON MECHANICAL BUILDING PLUMBING DETAILS
TECH. REVIEW: P BAKER		
DATE: 04/11/2025		BANDELIER NATIONAL MONUMENT

DRAWING NO. 315 182751
PMIS/PKG NO. 266697
SHEET 188 OF 203

3/25/2025 7:55 AM ANDREVRR24 10P501_D3167658.DWG XG-Seed_BAND for sheets
XG-Border_BAND

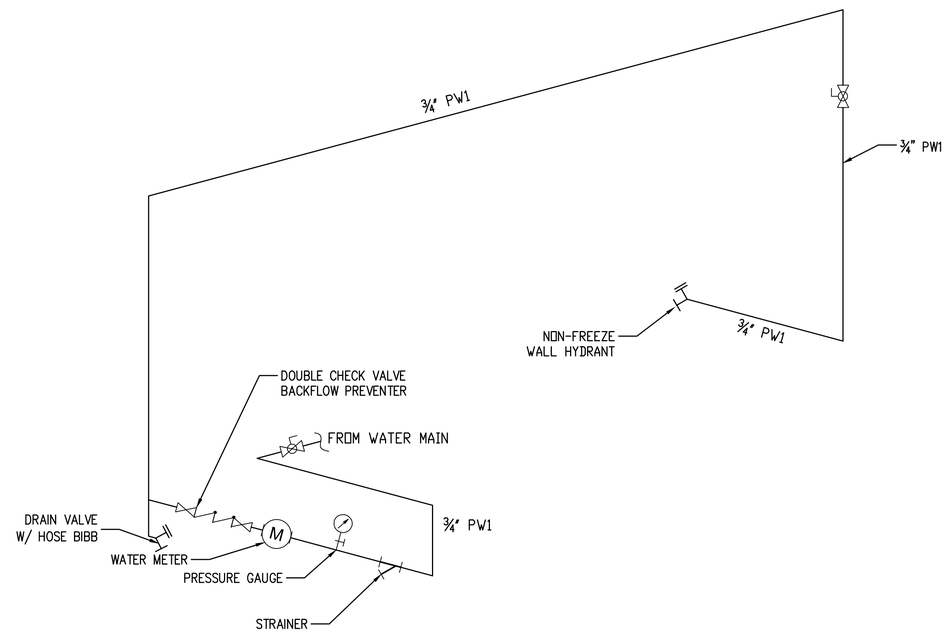

1 / 10P502 SERVICE WATER RISER DIAGRAM
NOT TO SCALE

FULL SIZE DRAWINGS = 22"x34" 0" 1"
BAR MEASURES 1" LONG

GREGORY SCOTT HINTE
NEW MEXICO
18049
PROFESSIONAL ENGINEER

Gregory Scott Hinte
2025.04.08
14:20:08-05'00'

DESIGNED: S HINTE	SUB SHEET NO.	TITLE OF SHEET	DRAWING NO.
CADD M B STEWART	10P502	PLUMBING	315
TECH. REVIEW: P BAKER		CANYON MECHANICAL BUILDING PLUMBING DETAILS	182751
DATE: 04/11/2025		BANDELIER NATIONAL MONUMENT	PMIS/PKG NO. 266697
			SHEET 189 OF 203

3/25/2025 7:56 AM ANDREVRR24 10P502_D3167658.DWG XG-Sheet_BAND for sheets
XG-Border_BAND

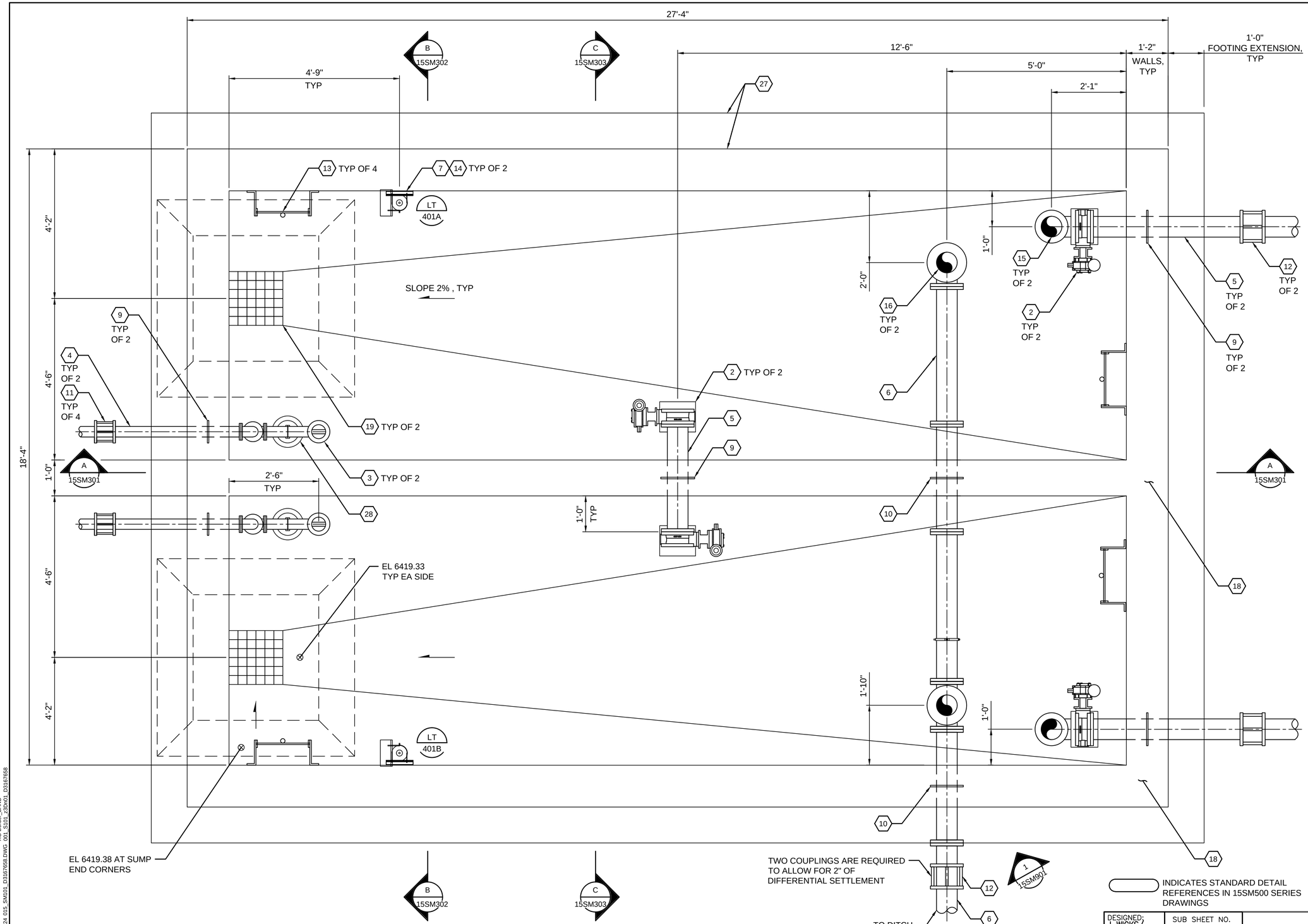

INDICATES STANDARD DETAIL REFERENCES IN 15SM500 SERIES DRAWINGS

MATERIAL SCHEDULE

ID	MATERIAL
1	NOT USED
2	6" BUTTERFLY VALVE WITH EXTENSION STEM, FLOOR STAND AND GROUND LEVEL POSITION INDICATOR, V500
3	3" DUCKBILL CHECK VALVE, FLANGED, V694
4	3" DUCTILE IRON PIPE I/E FBE
5	6" DUCTILE IRON PIPE I/E FBE
6	6" CARBON STEEL PIPE I/E FBE
7	4" PVC SCH 80 PIPE STILLING WELL WITH MOUNTING BRACKETS FOR WALLS AND FLOOR.
8	6" PVC SCH80 VENT PIPE AND VERMIN PROOF COVERING 3305-981 SIM
9	DUCTILE IRON PIPE WALL PENETRATION, SEE 4027-605
10	STEEL PIPE WALL PENETRATION, SEE 4027-600
11	3" BOLTED SLEEVE TYPE COUPLING (RESTRAINED) TWO COUPLINGS ARE REQUIRED ON EACH INLET PIPE TO ALLOW FOR 2" OF DIFFERENTIAL SETTLEMENT
12	6" BOLTED SLEEVE TYPE COUPLING (RESTRAINED)
13	SST LADDER WITH LADDER UP, SEE 0551-101
14	SUBMERSIBLE LEVEL PROBES WITH TOP FLANGE, SEE DWG 08Y701
15	REMOVABLE SILT STOPS
16	8" CARBON STEEL FBE I/E FLARED 8 x 6 REDUCER
17	4" DUCTILE IRON PIPE FBE I/E FLOOR PENETRATION, SEE 4027-622
18	TYPICAL WALL CORNER AND INTERSECTION REINFORCING, SEE 0330-003
19	1'-6" SQ x 9" DEEP SUMP LAYOUT AND REINFORCING, SEE 0330-044 WITH SST GRATING, SEE 0553-001
20	12 HIGH X 8 WIDE CONCRETE CURB AT ACCESS HATCH SEE 0330-080 . CURB HEIGHT TO BE CONFIRMED BY HATCH MFR BASED ON HATCH TYPE BEING PROVIDED.
21	3-0 S UARE LOCKABLE ALUMINUM ROOF ACCESS HATCH. PROVIDE OWNER WITH PADLOCKS AND (ONE) MASTER KEY FOR ALL 4 PADLOCKS.
22	TYPICAL OPENING REINFORCING, SEE 0330-001
23	WALL BASE CONSTRUCTION JOINT LAYOUT AND REINFORCING, SEE 0330-005
24	ADDITIONAL REINFORCING AT HORIZ CONSTRUCTION JOINT, SEE 0330-004
25	WALL CONSTRUCTION JOINT AT ELEVATED SLAB, SEE 0315-152
26	CRICKET FOR DRAINAGE AT HATCHES.
27	WALL AND SLAB CONSTRUCTION JOINT INFORMATION, SEE 0315-131 , 0315-133 0315-142 AND 0315-151
28	PIPE SUPPORT, SEE DETAIL 4005-501

SCALE (A) 0 1'-4" 2'-8" 4'-0" 3/4" = 1'-0"
SCALE OF FEET

FULL SIZE DRAWINGS = 22"x34"
BAR MEASURES 1" LONG

FOUNDATION PLAN

SCALE (A)

Thomas Paige
Thomas Paige
2025.04.10
11:22:40 -06'00'

THOMAS E. PAIGE
NEW MEXICO
17930
PROFESSIONAL ENGINEER

BRYOR WAYNE PRICE
NEW MEXICO
27845
PROFESSIONAL ENGINEER
04-09-2025

DESIGNED: J WICKS/ T PAIGE	SUB SHEET NO.	TITLE OF SHEET STRUCTURAL/MECHANICAL	DRAWING NO. 315 182751
CADD S METCALF	15SM101	ENTRANCE ROAD WATER TANK FOUNDATION PLAN BANDELIER NATIONAL MONUMENT	PMIS/PKG NO. 266697
TECH. REVIEW: C. WEBSTER/ L. FETTKETHER			SHEET 190 OF 203
DATE: 04/11/2025			

XG-Border_BAND
4/4/2025 11:08 AM SMETCALF024 015_SM101_03167658.DWG 001_S101_230901_03167658

NOTES:

1. REFER TO DWG 15SM101 FOR KEYNOTES.

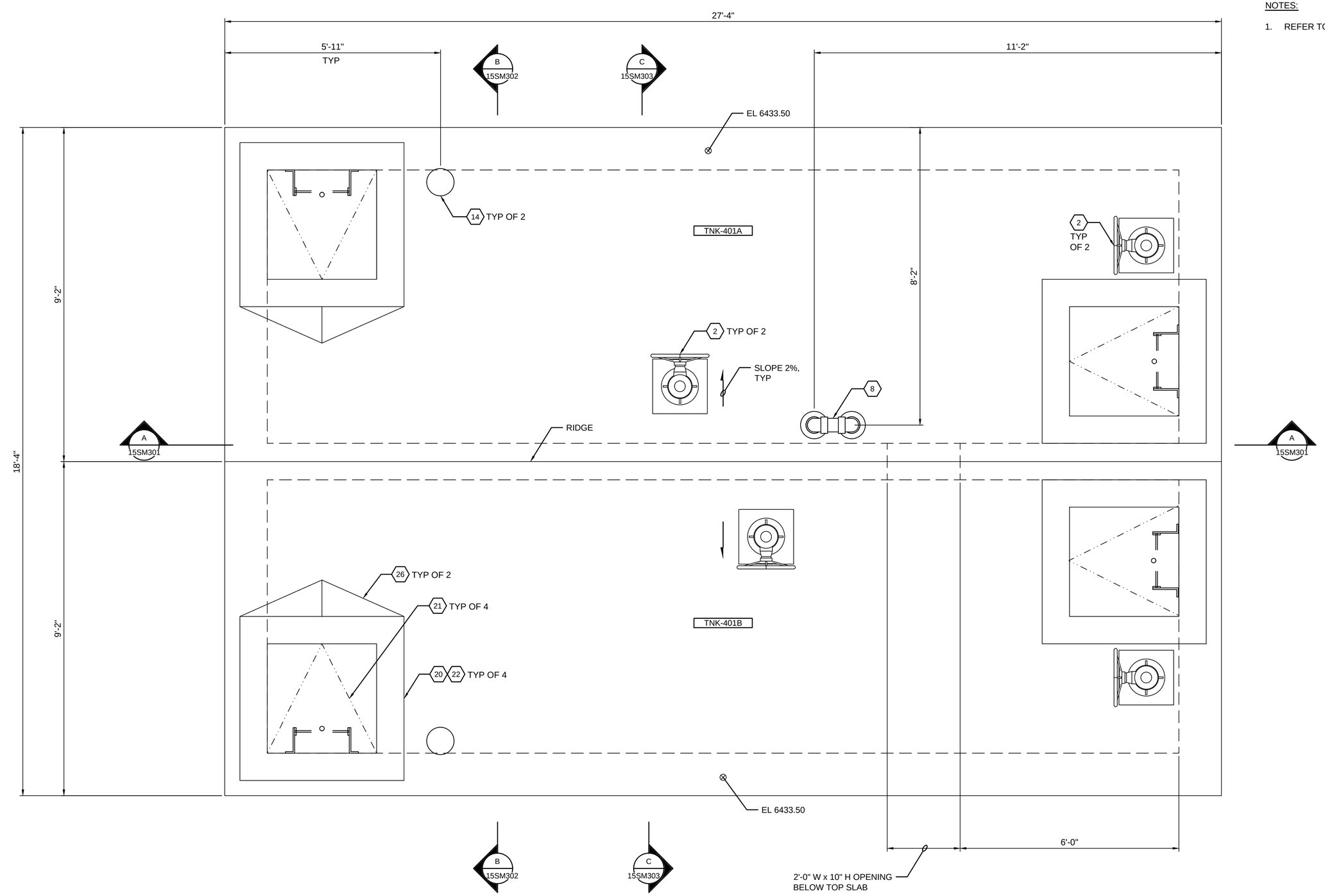

SCALE (A) 0 1'–4" 2'–8" 4'–0" 3/4" = 1'–0"
SCALE OF FEET

FULL SIZE DRAWINGS = 22"x34"
BAR MEASURES 1" LONG

0" 1"

TOP PLAN
SCALE (A)

Thomas Paige
Thomas Paige
2025.04.10
11:23:14 -06'00'

THOMAS E. PAIGE
NEW MEXICO
17930
PROFESSIONAL ENGINEER

BRYOR WAYNE PRICE
NEW MEXICO
27845
PROFESSIONAL ENGINEER
04-09-2025

DESIGNED: J WICKS/ T PAIGE	SUB SHEET NO.	TITLE OF SHEET STRUCTURAL/MECHANICAL	DRAWING NO. 315
CADD S METCALF	15SM102	ENTRANCE ROAD WATER TANK TOP PLAN	182751
TECH. REVIEW: C. WEBSTER/ L. FETTKETHER		BANDELIER NATIONAL MONUMENT	PMIS/PKG NO. 266697
DATE: 04/11/2025			SHEET 191 OF 203

4/4/2025 11:09 AM SMETCALFR24 015_SM102_D3167658.DWG 001_S102_25IN01_D3167658 XG-Border_BAND

NOTES:

1. REFER TO DWG 15SM101 FOR KEYNOTES.

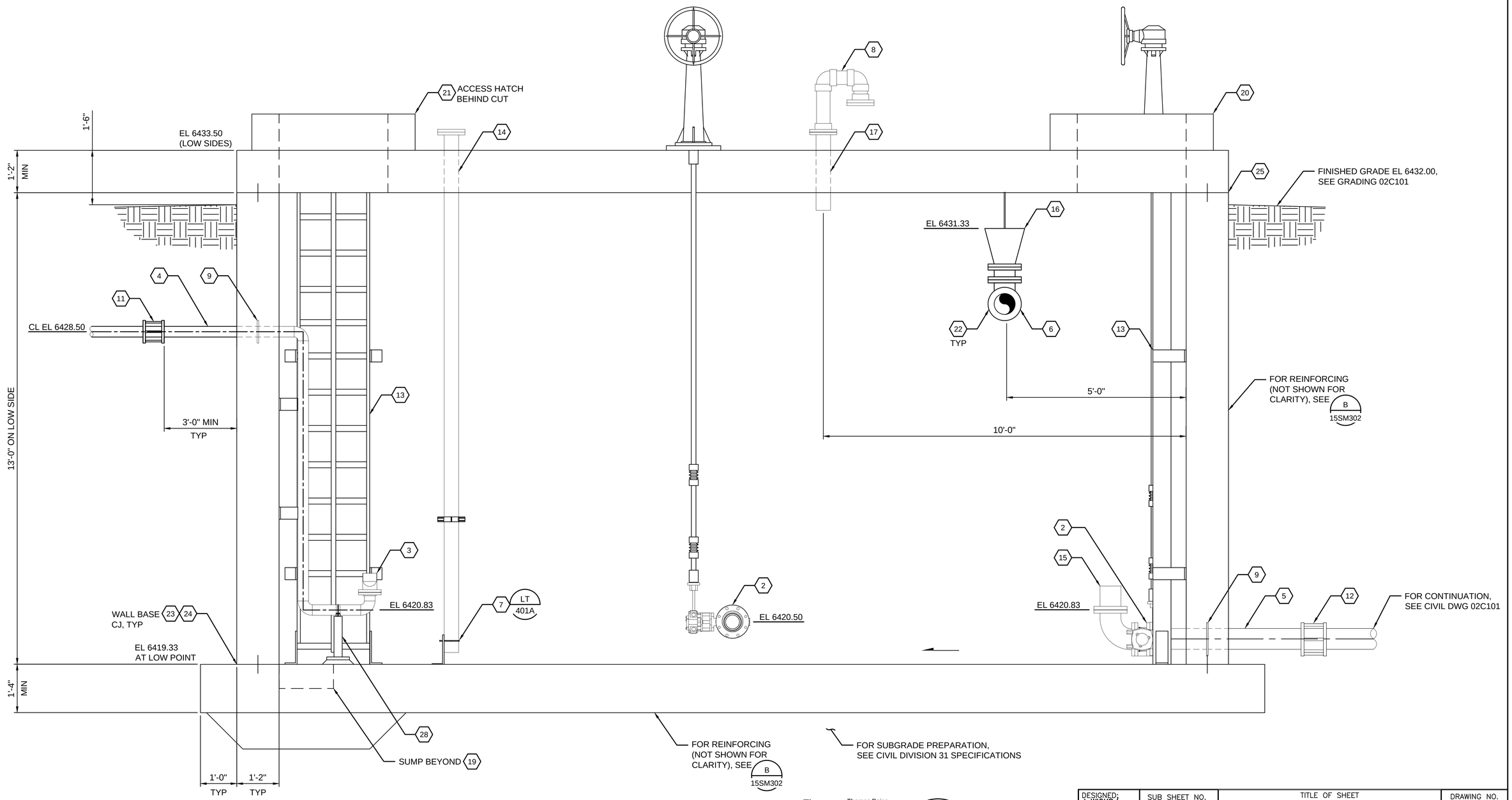

A SECTION
3/4"=1'-0"
15SM101, 15SM102

SCALE A 0 1'–4" 2'–8" 4'–0" 3/4" = 1'–0"
SCALE OF FEET

FULL SIZE DRAWINGS = 22"x34" 0" 1"
BAR MEASURES 1" LONG

Thomas Paige
Thomas Paige 2025.04.10 11:23:30 -06'00'

THOMAS E. PAIGE NEW MEXICO 17930 PROFESSIONAL ENGINEER

BRYAN WAYNE PRICE NEW MEXICO 27845 PROFESSIONAL ENGINEER
04-09-2025

DESIGNED: J WICKS/ T PAIGE	SUB SHEET NO.	TITLE OF SHEET STRUCTURAL/MECHANICAL	DRAWING NO. 315
CADD S METCALF	15SM301	ENTRANCE ROAD WATER TANK SECTION 1	182751
TECH. REVIEW: C. WEBSTER/ L. FETTKETHER		BANDELIER NATIONAL MONUMENT	PMIS/PKG NO. 266697
DATE: 04/11/2025			SHEET 192 OF 203

4/4/2025 11:09 AM SMETCALFR24 015_SM301_D3167658.DWG 001_S103_2SC01_D3167658 XG-Border_BAND

NOTES:

1. REFER TO DWG 15SM101 FOR KEYNOTES.
2. CENTER DIVIDER WALL TO HAVE SAME REINFORCING AS PERIMETER WALLS. BARS NOT SHOWN FOR CLARITY.

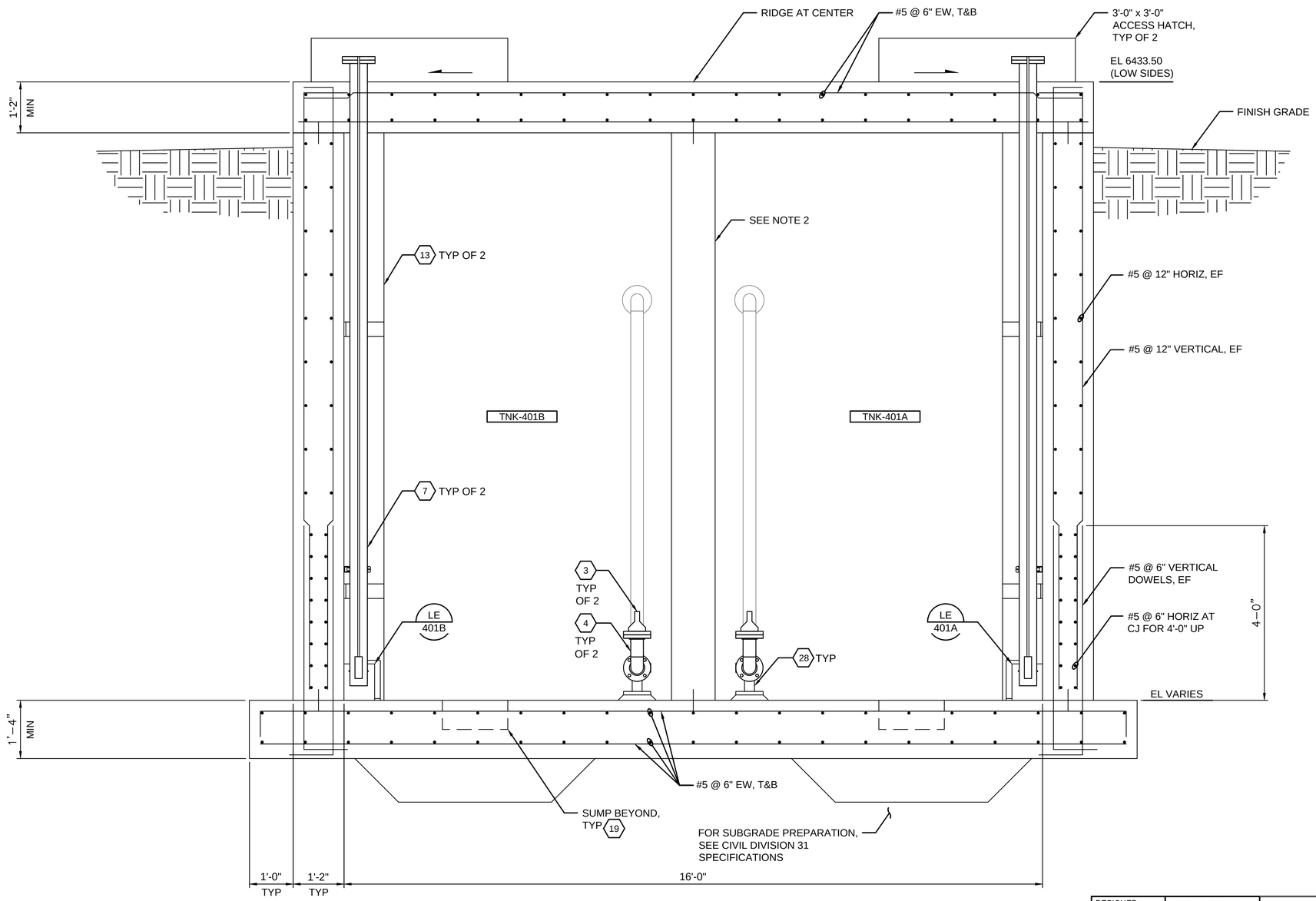

B SECTION
3/4"=1'-0"

15SM101
15SM102
15SM301
15SM303

SCALE A 0 1'-4" 2'-8" 4'-0" 3/4" = 1'-0"
SCALE OF FEET

FULL SIZE DRAWINGS = 22"x34" 0" 1"
BAR MEASURES 1" LONG

Thomas Paige
Thomas Paige 2025.04.10 11:23:45 -06'00'

THOMAS E. PAIGE NEW MEXICO 17930 PROFESSIONAL ENGINEER

BRYOR WAYNE PRICE NEW MEXICO 27845 PROFESSIONAL ENGINEER
04-09-2025

DESIGNED: J WICKS/ T PAIGE	SUB SHEET NO.	TITLE OF SHEET STRUCTURAL/MECHANICAL	DRAWING NO. 315 182751
CADD S METCALF	15SM302	ENTRANCE ROAD WATER TANK SECTION 2 BANDELIER NATIONAL MONUMENT	PMIS/PKG NO. 266697
TECH. REVIEW: C. WEBSTER/ L. FETTKETHER			SHEET 193 OF 203
DATE: 04/11/2025			

4/4/2025 11:10 AM SMETCALFR24 015_SM302_D3167658.DWG XG-Bonds: BAND 001_3109_25C941_D3167658

NOTES:

1. REFER TO DWG 15SM101 FOR KEYNOTES.

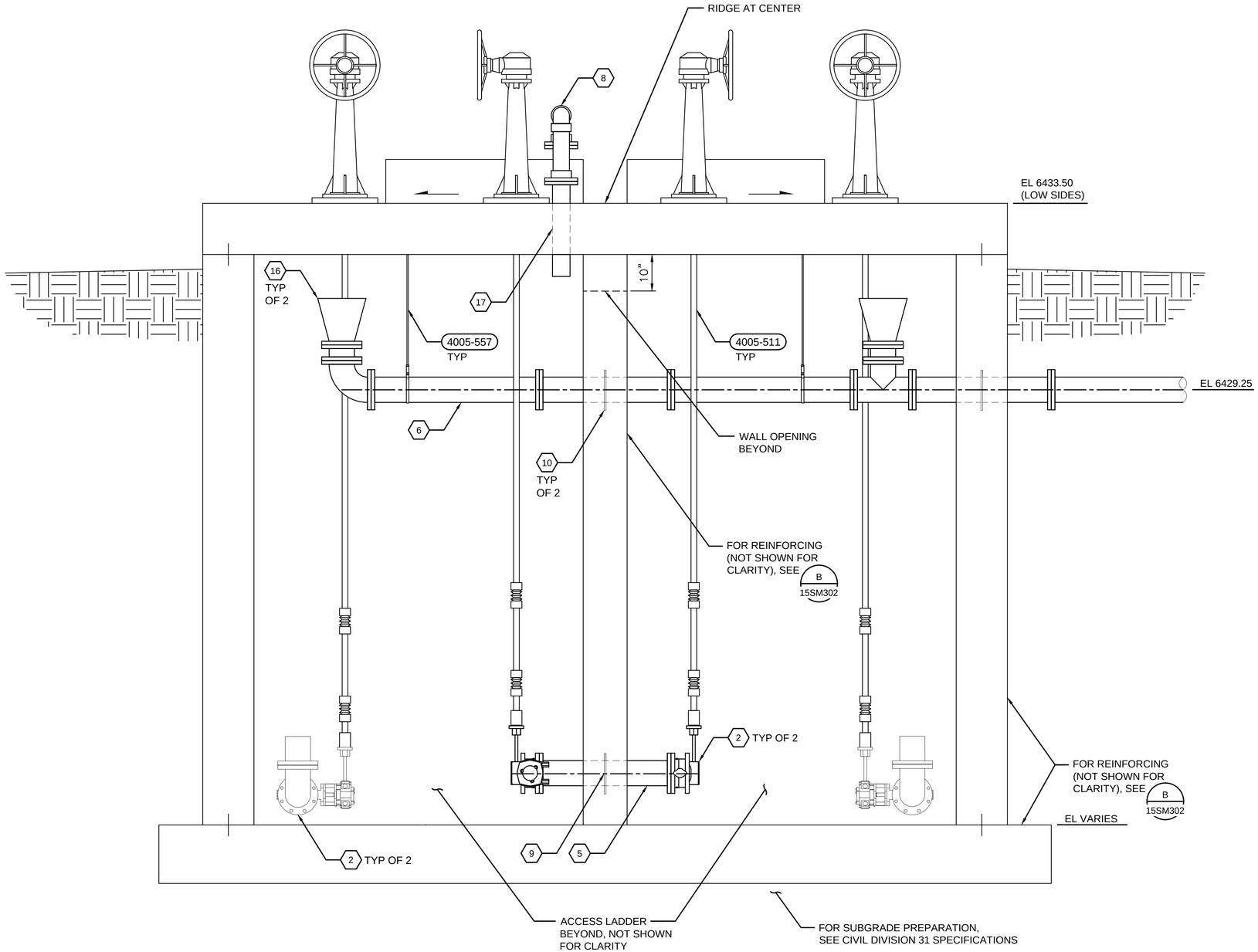

C SECTION
3/4"=1'-0"
15SM101, 15SM102

SCALE A 0 1'-4" 2'-8" 4'-0" 3/4" = 1'-0"
SCALE OF FEET

FULL SIZE DRAWINGS = 22"x34" 0" 1"
BAR MEASURES 1" LONG

Thomas Paige
Thomas Paige
2025.04.10
11:23:59 -06'00'

THOMAS E. PAIGE
NEW MEXICO
17930
PROFESSIONAL ENGINEER

BRYON WAYNE PRICE
NEW MEXICO
27845
PROFESSIONAL ENGINEER
04-09-2025

DESIGNED: J WICKS/ T PAIGE	SUB SHEET NO.	TITLE OF SHEET STRUCTURAL/MECHANICAL	DRAWING NO. 315 182751
CADD S METCALF	15SM303	ENTRANCE ROAD WATER TANK SECTION 3	PMIS/PKG NO. 266697
TECH. REVIEW: C. WEBSTER/ L. FETTKETHER		BANDELIER NATIONAL MONUMENT	SHEET 194 OF 203
DATE: 04/11/2025			

4/4/2025 11:10 AM SMETCALFR24 015_SM303_D3167658.DWG 001_S10_25x01_D3167658 XC-Border_BAND

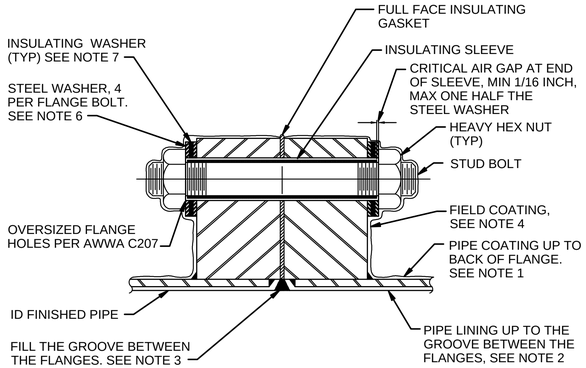

NOTES:

1. THE PIPE COATING ON EACH SIDE OF THE INSULATED FLANGE SHALL BE THE SAME IN TYPE, THICKNESS, AND QUALITY UP TO THE BACK SIDE OF THE RESPECTIVE FLANGE.
2. THE LINING ON THE PIPE SHALL BE THE SAME IN TYPE, THICKNESS, AND QUALITY UP TO THE INSULATED FLANGE JOINT.
3. FOR PIPE LARGER THAN 24 INCH DIAMETER , FILL THE INSULATED FLANGE'S INTERNAL GAP WITH A MATERIAL COMPATIBLE WITH THE PIPE LINING.
4. COAT JOINTS AS SPECIFIED AFTER INSTALLATION.
5. FOR PIPE SMALLER THAN 36 INCH DIAMETER DELETE INNER STEEL WASHERS.
6. FOR BURIED OR SUBMERGED INSULATING FLANGE, DO NOT INSTALL INSULATING WASHER ON PROTECTED SIDE OF FLANGE.

INSULATED FLANGES

NTS

2642-930

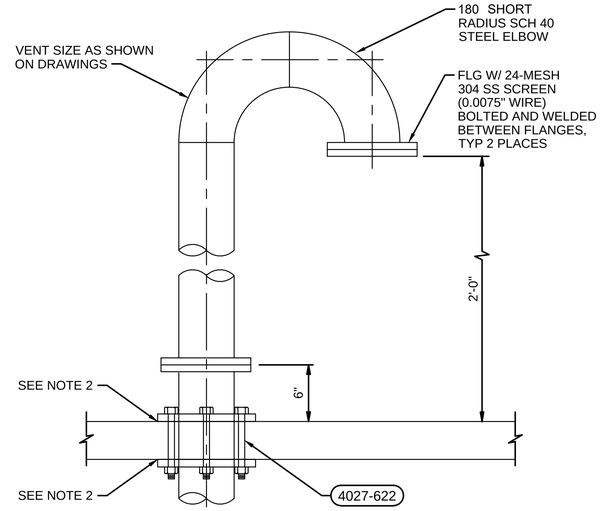

NOTES:

1. COAT PIPE IN ACCORDANCE WITH SECTION 09 90 00, PAINTING SYSTEM NO. 5.
2. CAULK IN PLACE WITH FIBERGLASS CAULKING TO SECURE IN PLACE.

EXHAUST VENT

NTS

3305-981

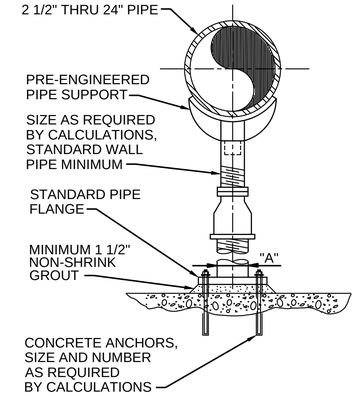

DIMENSION TABLE	
PIPE SIZE	"A" MINIMUM NOMINAL PIPE SIZE
2-1/2"	2-1/2"
3"	2-1/2"
4"	3"
6"	3"
8"	3"
10"	3"
12"	3"
14"	4"
16"	4"
20"	6"
24"	6"

NOTE:

SUBMIT FINAL DESIGN AND CALCULATIONS FOR SUPPORT AND ANCHORAGE AS SPECIFIED.

PIPE SUPPORT - SADDLE SUPPORT PEDESTAL TYPE - ADJUSTABLE

NTS

4005-500

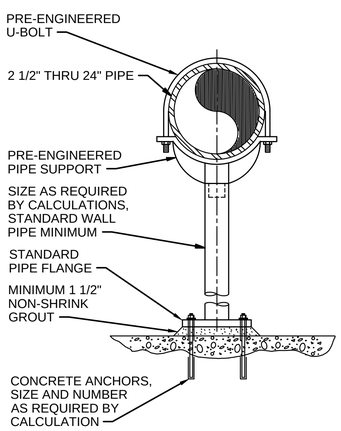

DIMENSION TABLE	
PIPE SIZE	"A" MINIMUM NOMINAL PIPE SIZE
2-1/2"	2-1/2"
3"	2-1/2"
4"	3"
6"	3"
8"	3"
10"	3"
12"	3"
14"	4"
16"	3"
20"	4"
24"	4"

NOTE:

1. SUBMIT FINAL DESIGN AND CALCULATIONS FOR SUPPORT AND ANCHORAGE AS SPECIFIED.
2. EPOXY COAT FOR SUBMERGED SERVICE AND PAINT FOR EXPOSED SERVICE.

PIPE SUPPORT - SADDLE SUPPORT PEDESTAL TYPE - NON-ADJUSTABLE

NTS

4005-501

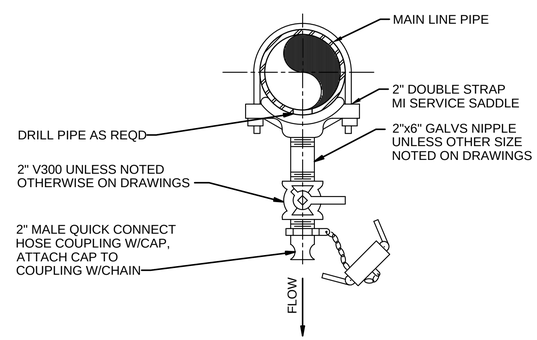

NOTES:

1. FOR LINE SIZE 2" AND SMALLER, FITTINGS AND VALVES SHALL BE SAME SIZE AS LINE.

LINE DRAIN VALVE INSTALLATION

NTS

4027-191

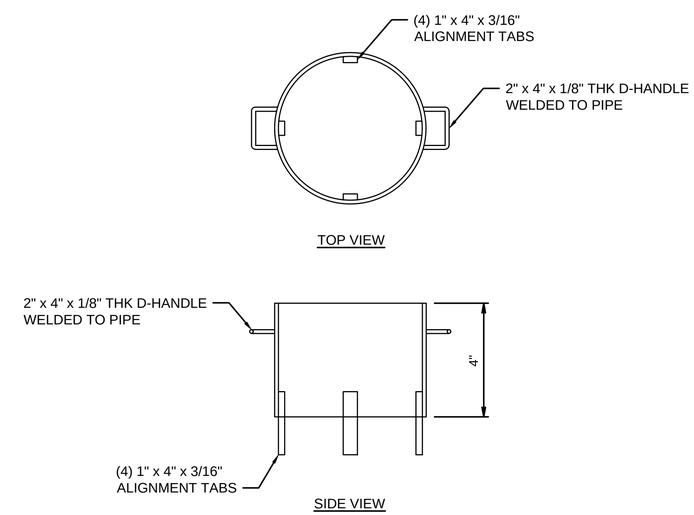

NOTES:

1. PIPE MATERIAL TO 6" SCH10 304 STAINLESS STEEL.

REMOVABLE SILT STOP

NTS

4027-192

BRYOR WAYNE PRICE NEW MEXICO 27845 PROFESSIONAL ENGINEER
04-09-2025

DESIGNED: J WICKS	SUB SHEET NO.	TITLE OF SHEET	DRAWING NO.
CADD S METCALF	15SM501	STRUCTURAL/MECHANICAL	315 182751
TECH. REVIEW: C. WEBSTER/ L. FETTKETHER		DETAILS	PMIS/PKG NO. 266697
DATE: 04/11/2025		BANDELIER NATIONAL MONUMENT	SHEET 195 OF 203

4/4/2025 11:11 AM SMETCALFR24 015_SM501_D3167658.DWG XG-Border_BAND

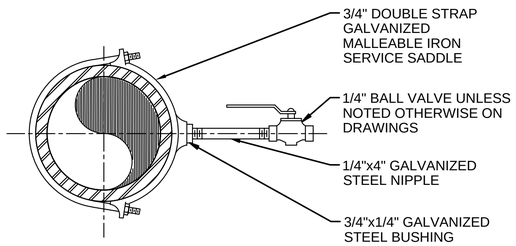

PRESSURE TEST POINT

NTS

4027-194

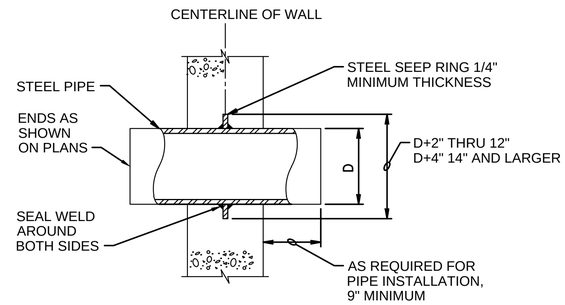

STEEL WALL PIPE

NTS

4027-600

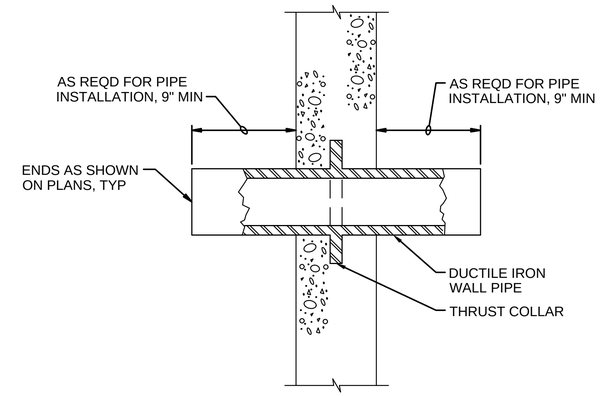

NOTES:

1. COAT WALL PIPE WITH SPECIFIED PAINT SYSTEM PRIOR TO CONCRETE PLACEMENT.

DUCTILE IRON WALL PIPE

NTS

4027-605

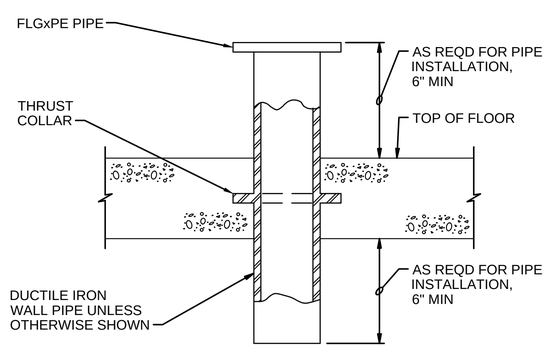

NOTES:

1. COAT FLOOR PIPE WITH SPECIFIED PAINT SYSTEM PRIOR TO CONCRETE PLACEMENT.

FLOOR PIPE

NTS

4027-622

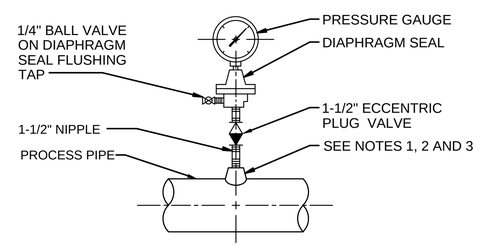

DIAPHRAGM PRESSURE GAUGE

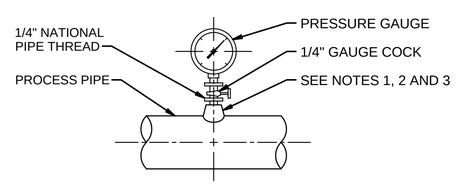

PRESSURE GAUGE

NOTES:

1. FOR STEEL, GALVANIZED STEEL, AND PVC 2 1/2" AND SMALLER USE A BUSHING IN A TEE.
2. FOR DUCTILE IRON AND FIBERGLASS REINFORCED PLASTIC PIPE, ALL SIZES, USE PIPE SADDLE WITH BUSHING.
3. FOR STEEL AND STAINLESS STEEL PIPES 3" AND LARGER, AND PRESSURE VESSELS, USE THRED-O-LET AS SHOWN.
4. PROVIDE SNUBBER FOR POSITIVE DISPLACEMENT PUMP INSTALLATIONS.

PRESSURE GAUGE MOUNTING

NTS

4090-690

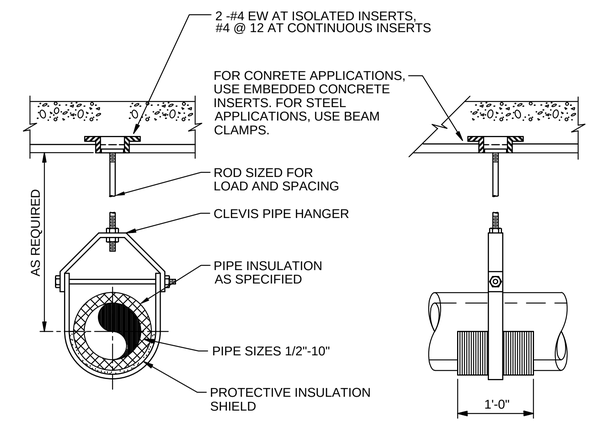

NOTES:

1. PIPE HANGERS SHALL BE OVERSIZED AS REQUIRED TO ACCOMMODATE THICKNESS OF INSULATION SPECIFIED. HANGER SHALL NOT COME INTO CONTACT WITH THE INSULATION DIRECTLY, EITHER AT THE VERTICAL YOKE OR AT THE POINT OF SUPPORT. FOR REQUIREMENTS ON INSULATION SHIELD USED WITH PIPE HANGERS, SEE SPECIFICATIONS.

PIPE HANGER

NTS

4005-557

BRYOR WAYNE PRICE NEW MEXICO 27845 PROFESSIONAL ENGINEER
04-09-2025

DESIGNED: J WICKS	SUB SHEET NO.	TITLE OF SHEET	DRAWING NO.
CADD S METCALF	15SM502	STRUCTURAL/MECHANICAL	315 182751
TECH. REVIEW: C. WEBSTER/ L. FETTKETHER		DETAILS	PMIS/PKG NO. 266697
DATE: 04/11/2025		BANDELIER NATIONAL MONUMENT	SHEET 196 OF 203

4/4/2025 11:11 AM SMETCALFR24 015_SM502_D3167658.DWG XG-Border_BAND

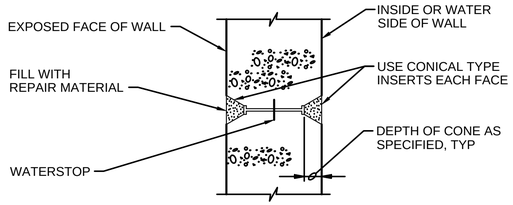

NOTE:

THE SPACING OF FORM TIES ON EXPOSED PORTIONS OF WALLS SHALL BE APPROXIMATELY EQUAL HORIZONTALLY AND VERTICALLY AND SHALL BE UNIFORM IN EACH DIRECTION.

FORM SNAP-TIE HOLE

NTS

0310-051

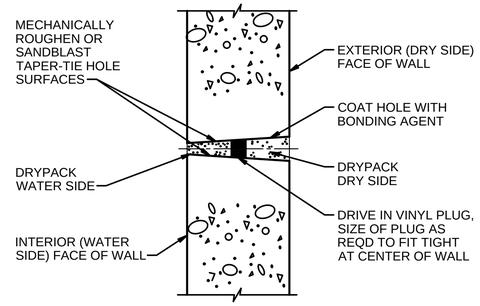

NOTE:

MINIMUM HOLE DIAMETER AT EXTERIOR FACE = 1". TAPER HOLE SO THAT MINIMUM HOLE DIAMETER AT INTERIOR FACE = 1 1/4"

CONSTRUCTION STEPS:

1. SANDBLAST OR MECHANICALLY ROUGHEN WITH ELECTRIC EQUIPMENT.
2. DRIVE IN VINYL PLUG.
3. COAT HOLE ON DRY SIDE OF PLUG AND WHILE BONDING AGENT IS TACKY, DRYPACK.
4. COAT HOLE ON WATER SIDE OF PLUG AND WHILE BONDING AGENT IS TACKY, DRYPACK.
5. USE CATEGORY II, NON-SHRINK GROUT AS SPECIFIED.

ALTERNATE FOR TIE-THROUGH BOLT

NTS

0310-052

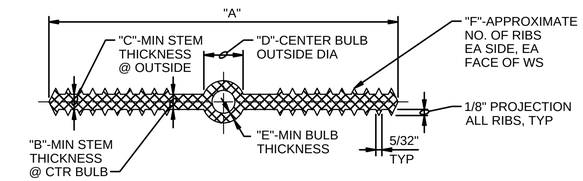

SIZE	"A"	"B"	"C"	"D"	"E"	"F"
6"x3/8"	6"	3/8"	3/8"	7/8"	1/4"	6

NOTES:

1. BULB TYPE WATERSTOP SHOWN IS REQUIRED FOR EXPANSION AND CONTROL JOINTS. SIMILAR WATERSTOPS WITHOUT CENTER BULB MAY BE SUBSTITUTED AT CONSTRUCTION JOINTS.
2. SEE WATERSTOP JOINT DETAIL 0315-001.

PLASTIC WATERSTOP

NTS

0315-001

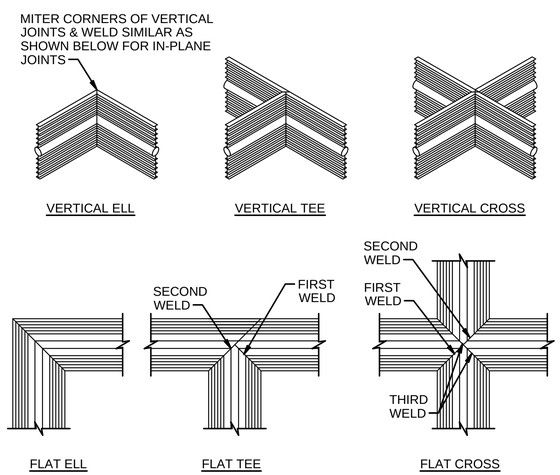

NOTE:

ALL WELDS SHALL BE PER WATERSTOP MANUFACTURER'S RECOMMENDATIONS.

WATERSTOP JOINTS

NTS

0315-011

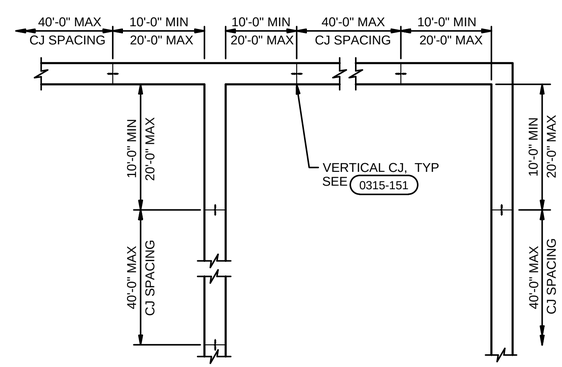

PLAN

NOTES:

1. COORDINATE CONSTRUCTION JOINT LOCATIONS AND TIME BETWEEN CONCRETE POURS WITH SPECIFICATION.
2. LOCATE WALL CONSTRUCTION JOINTS AS SHOWN, UNLESS INDICATED OTHERWISE.
3. SUBMIT CONSTRUCTION JOINT LAYOUT PLAN FOR APPROVAL PRIOR TO CONSTRUCTION.

WATER CONSTRUCTION JOINT SPACING

NTS

0315-131

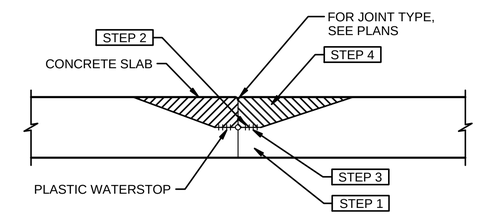

NOTES:

PLACEMENT SEQUENCE SHOWN REQUIRED ON BOTH SIDES OF JOINTS, IN ALL CONCRETE SLAB AND FOOTING POURS WITH HORIZONTALLY PLACED PLASTIC WATERSTOPS.

STEP 1

PLACE CONCRETE BELOW WATERSTOP FIRST, VIBRATING THOROUGHLY.

STEP 2

TO CONFIRM THERE ARE NO AIR VOIDS, LIFT WATERSTOP. A CONTINUOUS IMPRESSION OF THE WATERSTOP, INCLUDING EDGE OF BULB, SHOULD BE VISIBLE IN THE FRESH CONCRETE. CONTINUE THIS PROCEDURE ALONG THE ENTIRE POURED JOINT, END TO END. IF A CONTINUOUS IMPRESSION IS CONFIRMED, PROCEED WITH STEP 4. IF A VOID LARGER THE 1/4 INCH IN DIAMETER IS PRESENT ANYWHERE IN THE WATERSTOP IMPRESSION, PROCEED WITH STEP 3.

STEP 3

IF A VOID LARGER THAN 1/4 INCH IN DIAMETER IS PRESENT IN THE WATERSTOP IMPRESSION, ADDITIONAL CONCRETE SHALL BE PLACED UNDER THE WATERSTOP, VIBRATED, AND STEP 2 REPEATED.

STEP 4

FINISH PLACING CONCRETE ABOVE THE WATERSTOP TO TOP OF SLAB.

CONCRETE PLACEMENT SEQUENCE

NTS

0315-133

Thomas Paige
Thomas Paige 2025.04.10 11:17:08 -06'00'

THOMAS E. PAIGE NEW MEXICO 17930 PROFESSIONAL ENGINEER

DESIGNED: T PAIGE	SUB SHEET NO.	TITLE OF SHEET STRUCTURAL/MECHANICAL	DRAWING NO. 315 182751
CADD S METCALF	15SM503	DETAILS	PMIS/PKG NO. 266697
TECH. REVIEW: C. WEBSTER/ L. FETTKETHER		BANDELIER NATIONAL MONUMENT	SHEET 197 OF 203
DATE: 04/11/2025			

4/4/2025 11:11 AM SMETCALFR24 015_SM503_03167658.DWG XG-Border_BAND

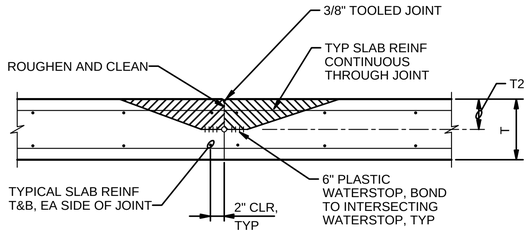

NOTE:

1. FOR CONCRETE PLACEMENT AROUND WATERSTOP, SEE 0315-133 .

SLAB CONSTRUCTION JOINT

NTS

0315-142

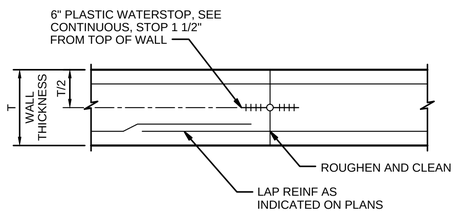

NOTES:

1. ALL REINFORCEMENT CONTINUOUS ACROSS JOINT.
2. FOR LOCATIONS, SEE 0315-131 .

WALL VERTICAL CONSTRUCTION JOINT

NTS

0315-151

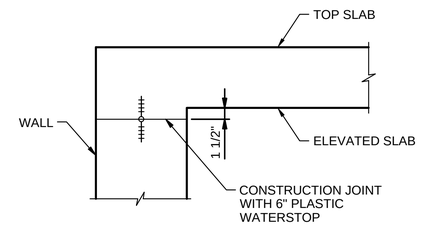

WALLS CONSTRUCTION JOINT AT ELEVATED SLAB

NTS

0315-152

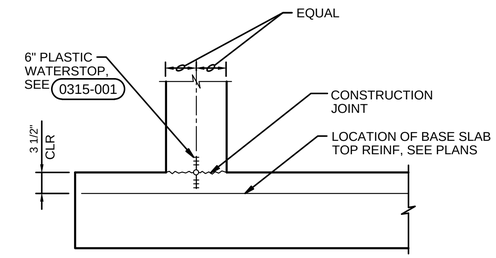

NOTES:

1. FOR WALLS WITH SINGLE MAT OF REINFORCING LOCATE WATERSTOP ON LIQUID FACE, 1" CLEAR OF REINFORCEMENT.
2. SECURE WATERSTOP IN-PLACE AS SPECIFIED.

WALL BASE CONSTRUCTION JOINT

NTS

0315-154

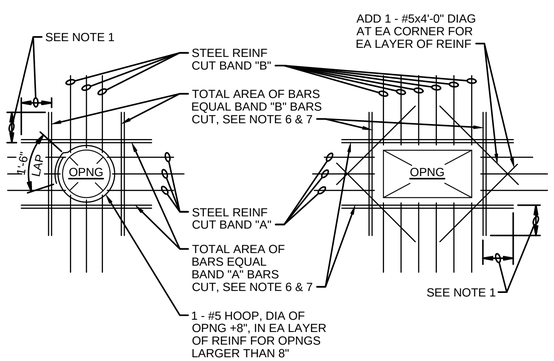

NOTES:

1. PROVIDE MINIMUM LAP, SEE GENERAL STRUCTURAL NOTES.
2. TYPICAL FOR ALL OPENINGS IN CONCRETE WALLS OF BELOW GRADE AND HYDRAULIC STRUCTURES AND ALL STRUCTURAL CONCRETE SLABS UNLESS INDICATED OTHERWISE ON PLANS.
3. DO NOT WELD REINFORCEMENT TO PIPE SLEEVES AND INSERTS.
4. PROVIDE A MINIMUM OF 2 "A" BARS AND 2 "B" BARS EACH SIDE OF OPENING (1 EACH FACE), INCLUDING DOWELS AND CORNER BARS, TYPICAL.
5. FOR OPENINGS LARGER THAN 8'-0", REINFORCE SAME AS FOR 8'-0" OPENINGS.
6. SPACE AT 3 BAR DIAMETERS (OR 3" MINIMUM) ON CENTER. LOCATE HALF OF TOTAL AREA ON EACH SIDE OF OPENING.
7. AT OPENINGS WITHIN 12" OF AN INTERSECTING WALL OR SLAB, PROVIDE ONLY THE EXTRA REINFORCEMENT WHICH WILL FIT, AT THE BAR SPACING IN NOTE 6.

OPENING REINFORCING

NTS

0330-001

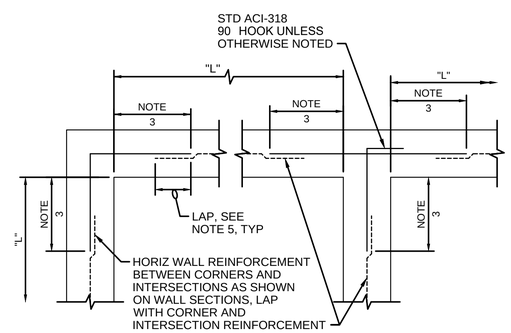

SINGLE REINFORCEMENT MAT

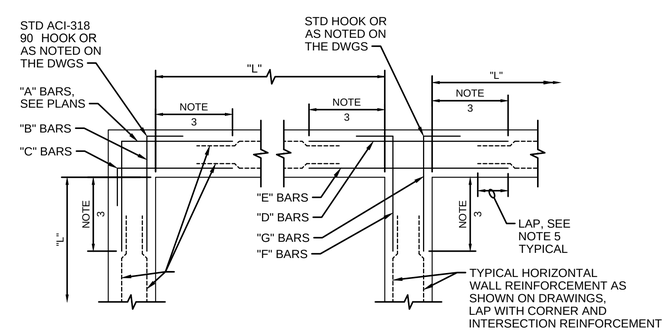

DOUBLE REINFORCEMENT MAT

NOTES:

1. TYPICAL HORIZONTAL WALL CORNER AND INTERSECTION REINFORCEMENT LAYOUT IS SHOWN TO AVOID CONGESTION AND PERMIT PROPER PLACEMENT, FOR SIZE AND SPACING SEE PLANS. ALL HORIZONTAL REINFORCEMENT AT CORNERS AND INTERSECTIONS SHALL BE FABRICATED AND INSTALLED WITH SPLICES LOCATED WHERE SHOWN REGARDLESS OF BAR SIZE AND SPACING.
2. WHERE THE CORNER OR INTERSECTION REINFORCEMENT SIZE AND SPACING IS NOT SHOWN, NOTED OR TABULATED ON THE PLANS, THE SIZE AND SPACING SHALL BE THE SAME AS THE WALL HORIZONTAL REINFORCEMENT SHOWN ON THE WALL SECTIONS OR AS NOTED FOR THE REINFORCEMENT BETWEEN THE CORNERS OR INTERSECTIONS.
3. EXCEPT WHERE OTHERWISE SHOWN ON THE DRAWINGS, THE LENGTH INDICATED AS "NOTE 3" SHALL BE THE LESSER OF L/4, 10 FEET, OR 1.0 TIMES THE HEIGHT OF THE WALL, EXCEPT THAT IN NO CASE SHALL IT BE LESS THAN A LAP LENGTH.
4. L = LENGTH OF WALL PARALLEL TO THE BAR LENGTH IN QUESTION.
5. EXCEPT WHERE OTHERWISE SHOWN ON THE DRAWINGS, THE LENGTH INDICATED AS "NOTE 5" SHALL BE EQUAL TO ONE "LAP LENGTH" AS REQUIRED BY THE GENERAL STRUCTURAL NOTES. USE THE LAP LENGTH AS REQUIRED FOR THE SMALLER OF THE TWO REINFORCEMENT BARS BEING SPLICED.
6. UNLESS OTHERWISE NOTED, "B" AND "C" BARS ARE THE SAME SIZE AND SPACING AND "F" AND "G" BARS ARE THE SAME SIZE AND SPACING.

TYPICAL WALL CORNER AND INTERSECTION REINFORCING

NTS

0330-003

Thomas Paige
Thomas Paige
2025.04.10
11:15:30 -06'00'

THOMAS E. PAIGE
NEW MEXICO
17930
PROFESSIONAL ENGINEER

DESIGNED: T PAIGE CADD S METCALF TECH. REVIEW: C. WEBSTER/ L. FETTKETHER DATE: 04/11/2025	SUB SHEET NO. 15SM504	TITLE OF SHEET STRUCTURAL/MECHANICAL DETAILS BANDELIER NATIONAL MONUMENT	DRAWING NO. 315 182751 PMIS/PKG NO. 266697 SHEET 198 OF 203

4/4/2025 11:12 AM SMETCALFR24 015_SM504_D3167658.DWG XG-Border_BAND

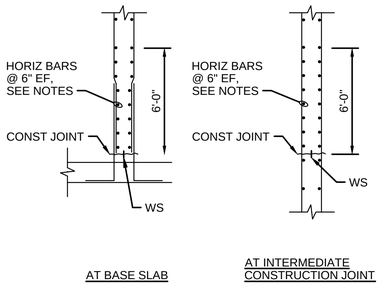

NOTES:

1. PROVIDE HORI ONTAL BARS AT 6 SPACING EACH FACE IN THE FIRST 6 -0 ABOVE ALL HORIZONTAL WALL CONSTRUCTION JOINTS IN LIQUID CONTAINING AND BELOW-GRADE STRUCTURES. WHERE TYPICAL WALL HORI ONTAL BARS ARE AT 12 SPACING PROVIDE ADDITIONAL BARS FOR 6 SPACING.
2. PROVIDE CORNER BARS AT 6" SPACING EACH FACE TO LAP WITH THE BARS SHOWN ABOVE, SEE 0330-003 .

REINFORCEMENT AT HORIZONTAL CONSTRUCTION JOINT

0330-004

NTS

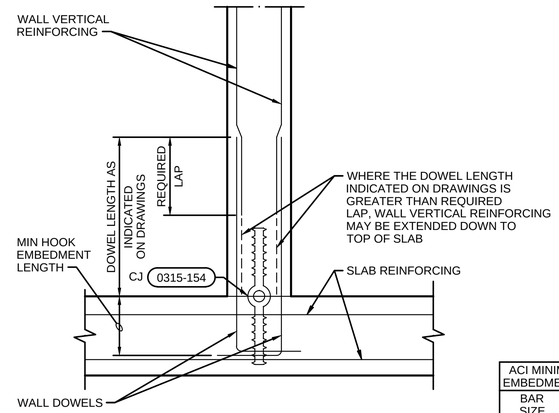

WALL SECTION

ACI MINIMUM HOOK EMBEDMENT LENGTH	
BAR SIZE	MIN EMBED
#4	7"
#5	9"
#6	11"
#7	12"
#8	14"
#9	16"
#10	17"

NOTE:

1. UNLESS NOTED OTHERWISE, ALL DOWEL HOOKS SHALL EXTEND TO AND BE TIED OFF TO BOTTOM MAT OF SLAB REINFORCING.
2. HOOKS FOR WALL DOWELS MAY BE PLACED IN ANY ORIENTATION IN PLAN.

WALL BASE CONSTRUCTION JOINT LAYOUT AND REINFORCING

0330-005

NTS

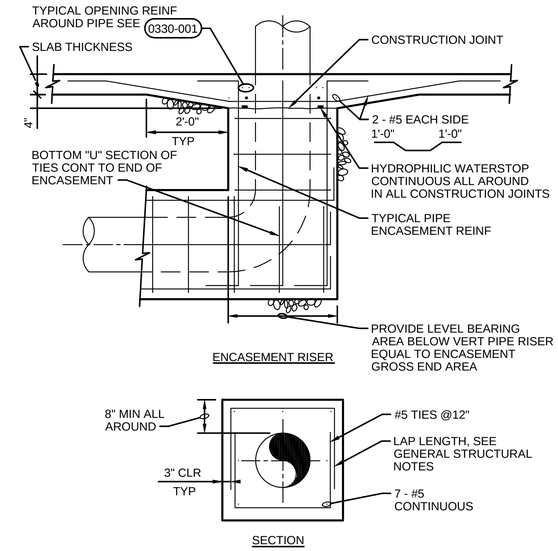

PIPE ENCASEMENT

0330-016

NTS

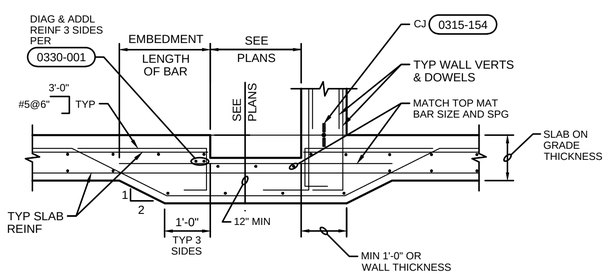

THICKENED SLAB

NOTES:

1. REBAR LOCATION SHALL ACCOMMO DATE GRATING CONNECTIONS WHERE REQUIRED. SEE DETAIL 0553-001 .

IN-SLAB SUMP REINFORCING

0330-044

NTS

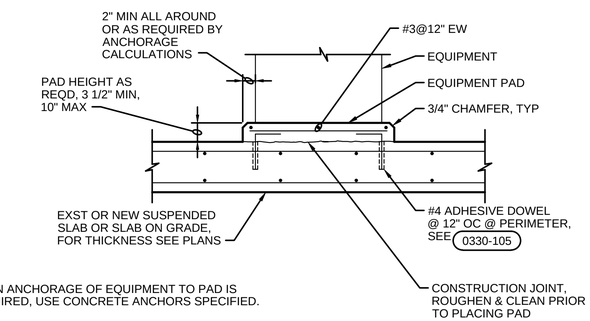

NOTES:

1. WHEN ANCHORAGE OF EQUIPMENT TO PAD IS REQUIRED, USE CONCRETE ANCHORS SPECIFIED.
2. CONCRETE PADS FOR ELECTRICAL EQUIPMENT SHALL BE 3 1/2" HIGH,UNLESS NOTED OTHERWISE.

TYPE 'A'

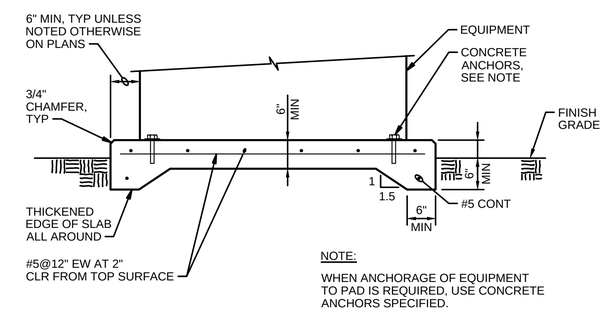

NOTE:

WHEN ANCHORAGE OF EQUIPMENT TO PAD IS REQUIRED, USE CONCRETE ANCHORS SPECIFIED.

TYPE 'B'

NOTES:

1. PAD SIZE SHALL BE MINIMUM INDICATED OR AS SHOWN ON THE PLANS OR AS INDICATED BY THE MANUFACTURER AND APPROVED BY THE ENGINEER.
2. THE SIZE, NUMBER, TYPE, LOCATION, AND THREAD PROJECTION OF THE ANCHOR BOLTS SHALL BE DETERMINED BY THE EQUIPMENT MANUFACTURER AND AS APPROVED BY THE ENGINEER. ANCHOR BOLTS SHALL BE HELD IN POSITION WITH A TEMPLATE OR OTHER ACCEPTABLE MEANS, MATCHING THE BASE PLATE, WHILE PAD IS BEING PLACED.
3. ANCHOR BOLT SLEEVES SHALL BE USED TO PROVIDE MINIMUM ANCHOR BOLT MOVEMENT OF 1/2" IN ALL HORIZONTAL DIRECTIONS. THE MINIMUM SLEEVE LENGTH SHALL BE 8 TIMES THE BOLT DIAMETER.
4. ANCHOR BOLT SLEEVES SHALL HAVE A MINIMUM INTERNAL DIAMETER 1" GREATER THAN BOLT DIAMETER AND A MAXIMUM INTERNAL DIAMETER 3" GREATER THAN ANCHOR BOLT DIAMETER. SLEEVES SHALL BE FILLED WITH NON-SHRINK GROUT AFTER BOLTS ARE ALIGNED.
5. EQUIPMENT BASES SHALL BE INSTALLED LEVEL UNLESS INDICATED OTHERWISE.
6. WEDGES, SHIMS, OR LEVELING NUTS SHALL BE USED TO SUPPORT THE BASE WHILE THE GROUT IS PLACED. WEDGES OR SHIMS SHALL BE REMOVED AFTER GROUT IS SET AND PACK VOID WITH GROUT.
7. AT CONTRACTOR'S OPTION, CONCRETE ANCHORS MAY BE USED IN LIEU OF CAST-IN-PLACE ANCHOR BOLTS FOR EQUIPMENT ANCHOR BOLTS LESS THAN 3/4" DIAMETER WHEN APPROVED BY THE EQUIPMENT MANUFACTURER AND APPROVED BY THE ENGINEER. ANCHORS SHALL BE INSTALLED WITH 4" MINIMUM EDGE DISTANCE IN EACH DIRECTION.

Thomas Paige
Thomas Paige
2025.04.10
11:16:11 -06'00'

THOMAS E. PAIGE
NEW MEXICO
17930
PROFESSIONAL ENGINEER

CONCRETE EQUIPMENT PAD

0330-056

NTS

DESIGNED: T PAIGE	SUB SHEET NO.	TITLE OF SHEET	DRAWING NO.
CADD S METCALF	15SM505	STRUCTURAL/MECHANICAL	315 182751
TECH. REVIEW: C. WEBSTER/ L. FETTKETHER		DETAILS	PMIS/PKG NO. 266697
DATE: 04/11/2025		BANDELIER NATIONAL MONUMENT	SHEET 199 OF 203

4/4/2025 11:13 AM SMETCALFR24 015_SM505_D3167658.DWG XG-Border_BAND

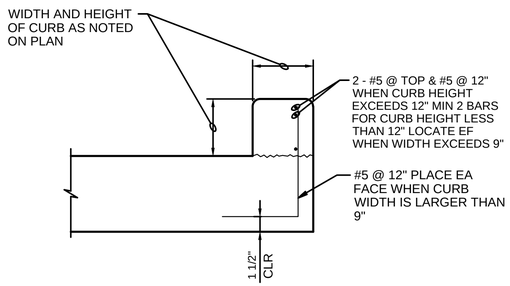

CONCRETE CURB

NTS

0330-080

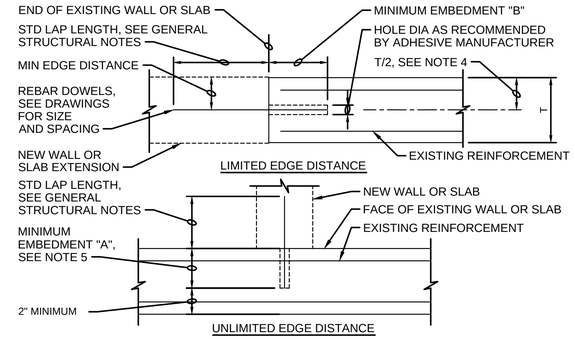

DOWEL SIZE	MINIMUM EDGE DISTANCE	MINIMUM EMBEDMENT "A"	MINIMUM EMBEDMENT "B"
#3	2 1/2"	5"	8"
#4	3 1/2"	7"	11"
#5	4"	8"	13"
#6	5"	10 1/2"	16"
#7	6"	12 1/2"	20"
#8	7"	14"	22"
#9	7 1/2"	15"	24"

NOTES:

1. CONFORM TO REQUIREMENTS OF SPECIFICATION SECTION 03 63 00, CONCRETE DOWELING.
2. FOLLOW ADHESIVE MANUFACTURER'S INSTRUCTIONS FOR INSTALLATION.
3. USE MINIMUM EMBEDMENTS SHOWN, EXCEPT USE MANUFACTURER'S MINIMUM RECOMMENDED EMBEDMENT IF GREATER.
4. LOCATE DOWELS CENTERED IN WALL OR SLAB UNLESS OTHERWISE NOTED ON DRAWINGS. WHERE 2 ROWS OF DOWELS INDICATED, STAGGER SPACING & LOCATE ALTERNATING DOWELS AT MINIMUM EDGE DISTANCE FROM OPPOSITE FACES.

ADHESIVE DOWEL

NTS

0330-105

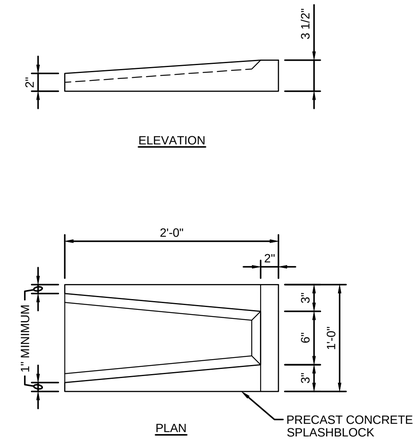

SPLASHBLOCK

NTS

0340-095

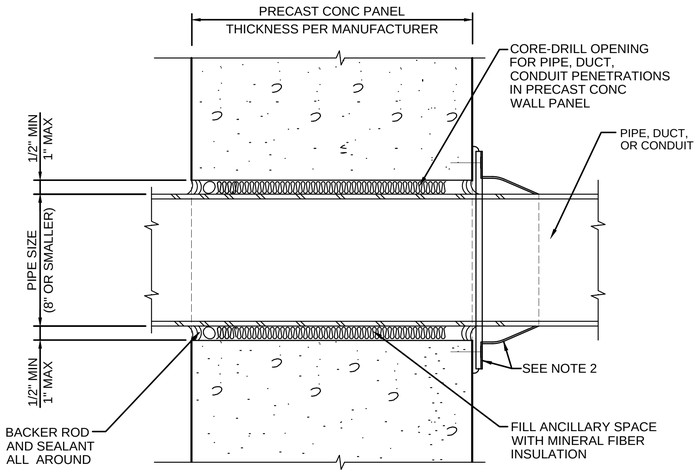

NOTES:

1. COORDINATE EXACT LOCATIONS WITH MECHANICAL DWGS. CONSULT ENGINEER FOR LOCATIONS PRIOR TO FIELD-CORE DRILLING.
2. AT EXTERIOR LOCATIONS, PROVIDE PIPETITE SILICONE OR EQUAL FLEXIBLE PIPE BOOT AND STAINLESS STEEL TRIM PLATE.

TYP SMALL WALL PENETRATION THRU PRECAST CONC PANEL

NTS

0341-510

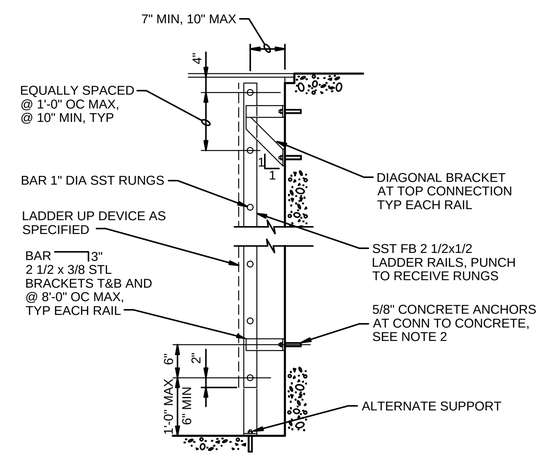

NOTES:

1. ALL LADDERS TO BE TYPE 316 SST.
2. PROVIDE SST CONCRETE ANCHORS.

FLAT BAR LADDER

NTS

0551-101

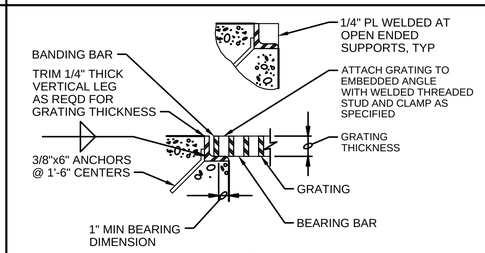

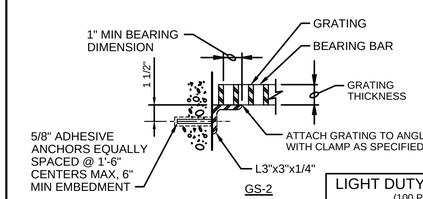

GENERAL NOTES:

1. GRATING SPAN IS INDICATED BY ◄——►, SEE PLAN.
2. INDIVIDUAL GRATING SECTIONS SHALL NOT EXCEED 3'-0" IN WIDTH OR WEIGH MORE THAN 150 POUNDS, UNLESS INDICATED OTHERWISE,
3. SHOP DRAWINGS BASED ON FIELD DIMENSIONS SHALL BE SUBMITTED TO THE ENGINEER PRIOR TO FABRICATION.
4. MATERIAL FOR SUPPORTS OF ALUMINUM GRATING TO BE SAME AS GRATING, EXCEPT METAL SUPPORTS THAT ARE TO BE EMBEDDED IN CONCRETE SHALL BE TYPE 316 STAINLESS STEEL.
5. BEARING BAR THICKNESS FOR GRATING TO BE 3/16" MINIMUM. SEE SPECIFICATIONS FOR SPACING OF BEARING AND CROSS BARS.
6. BAND ALL EDGES. MATCH DEPTH OF BEARING BAR.
7. THE HORIZONTAL CLEARANCE BETWEEN THE GRATING AND GRATING SUPPORTS SHALL NOT BE LESS THAN 1/4" NOR GREATER THAN 1/2" AND AS SPECIFIED.

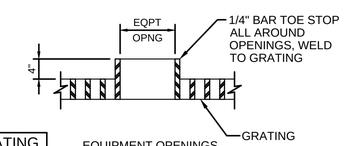

EQUIPMENT OPENINGS

LIGHT DUTY GRATING (100 PSF)	
GRATING THICKNESS TABLE	
MAXIMUM SPAN	STAINLESS STEEL
3'-6"	1"
4'-0"	1"
4'-6"	1"
5'-0"	1 1/4"
5'-6"	1 1/4"
6'-0"	1 1/2"
6'-6"	1 1/2"
7'-0"	1 3/4"

STANDARD GRATING

NTS

0553-001

Thomas Paige — Thomas Paige 2025.04.10 11:16:35 -06'00'

THOMAS E. PAIGE NEW MEXICO 17930 PROFESSIONAL ENGINEER

DESIGNED: T PAIGE	SUB SHEET NO.	TITLE OF SHEET STRUCTURAL/MECHANICAL	DRAWING NO. 315 182751
CADD S METCALF	15SM506	DETAILS	PMIS/PKG NO. 266697
TECH. REVIEW: C. WEBSTER/ L. FETTKETHER		BANDELIER NATIONAL MONUMENT	SHEET 200 OF 203
DATE: 04/11/2025			

4/4/2025 11:14 AM SMETCALFR24 015_SM506_D3167658.DWG XG-Border_BAND

NOTES:

1. REFER TO DWG 15SM101 FOR KEYNOTES.

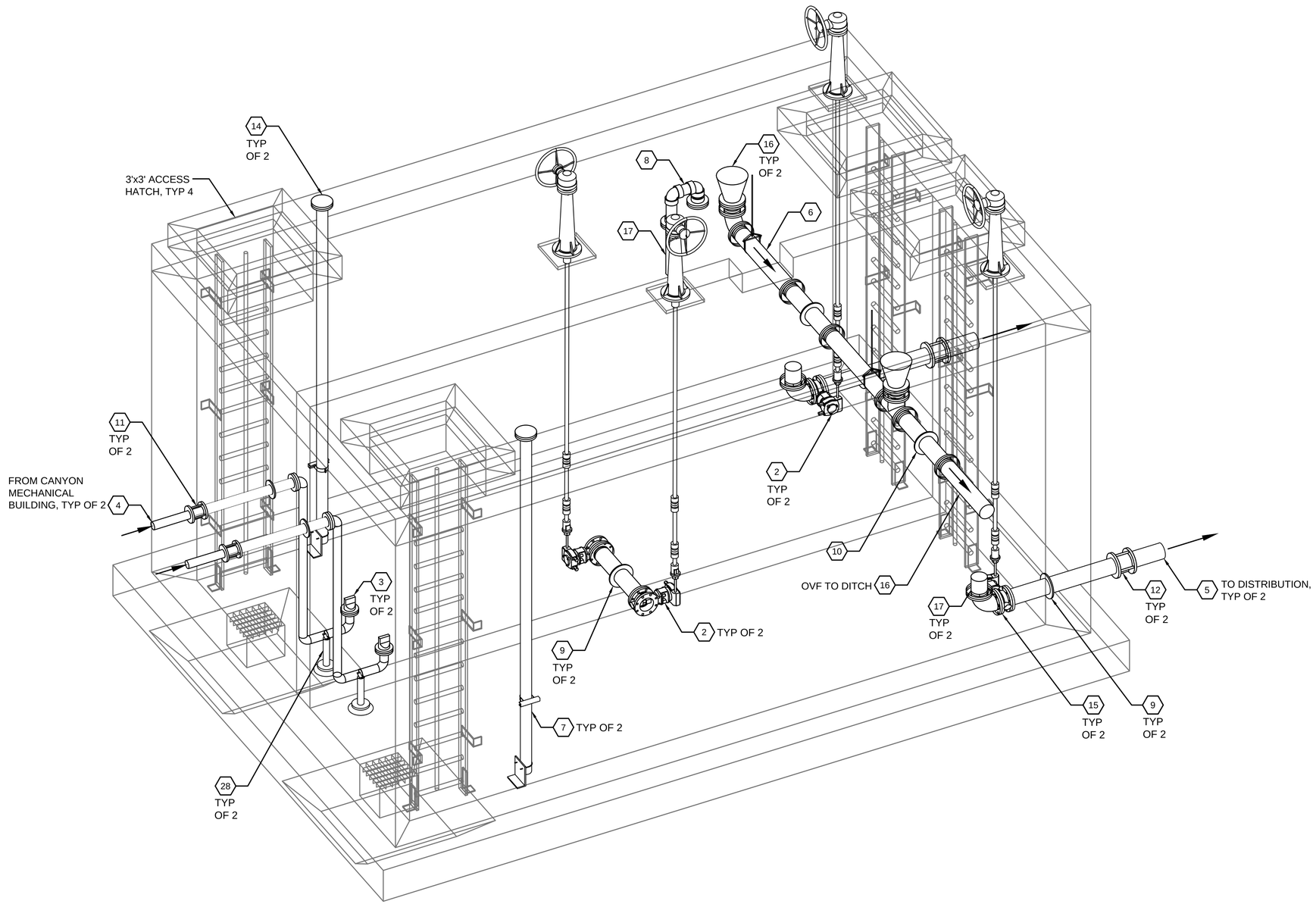

1 ISOMETRIC
NTS
015SM101

FULL SIZE DRAWINGS = 22"x34" 0" 1"
BAR MEASURES 1" LONG

BRYOR WAYNE PRICE
NEW MEXICO
27845
PROFESSIONAL ENGINEER
04-09-2025

DESIGNED: J WICKS	SUB SHEET NO.	TITLE OF SHEET PROCESS MECHANICAL	DRAWING NO. 315 182751
CADD S METCALF	15SM901	ENTRANCE ROAD WATER TANK ISOMETRIC	PMIS/PKG NO. 266697
TECH. REVIEW: C. WEBSTER/ L. FETTKETHER		BANDELIER NATIONAL MONUMENT	SHEET 201 OF 203
DATE: 04/11/2025			

4/4/2025 11:14 AM SMETCALFR2A 015_SM901_D3167658.DWG XG-Border_BAND

GENERAL NOTES

1. REFER TO GENERAL DRAWINGS FOR LEGENDS, NOTES, AND ABBREVIATIONS.
2. SUPPLY RECEPTACLES AND LIGHTING FROM THE INDICATED CIRCUIT IN PANEL LP-400. PROVIDE [3/4"C, 2#10, 1#10G] UNLESS SHOWN OTHERWISE. FIELD ROUTE TO PANEL.

SHEET KEYNOTES

1. PROVIDE NEMA 4X JUNCTION BOX TO SPLICE INSTRUMENT CABLE TO PERMANENT WIRING. MOUNT JUNCTION BOX 12 INCHES ABOVE TANK. PROVIDE STRUT SUPPORTS.
2. FIELD ROUTE CONDUIT BELOW GRADE TO THE CANYON MECHANICAL BUILDING.
3. MOUNT RECEPTACLE 12 INCHES ABOVE TANK LID. PROVIDE STRUT SUPPORT.

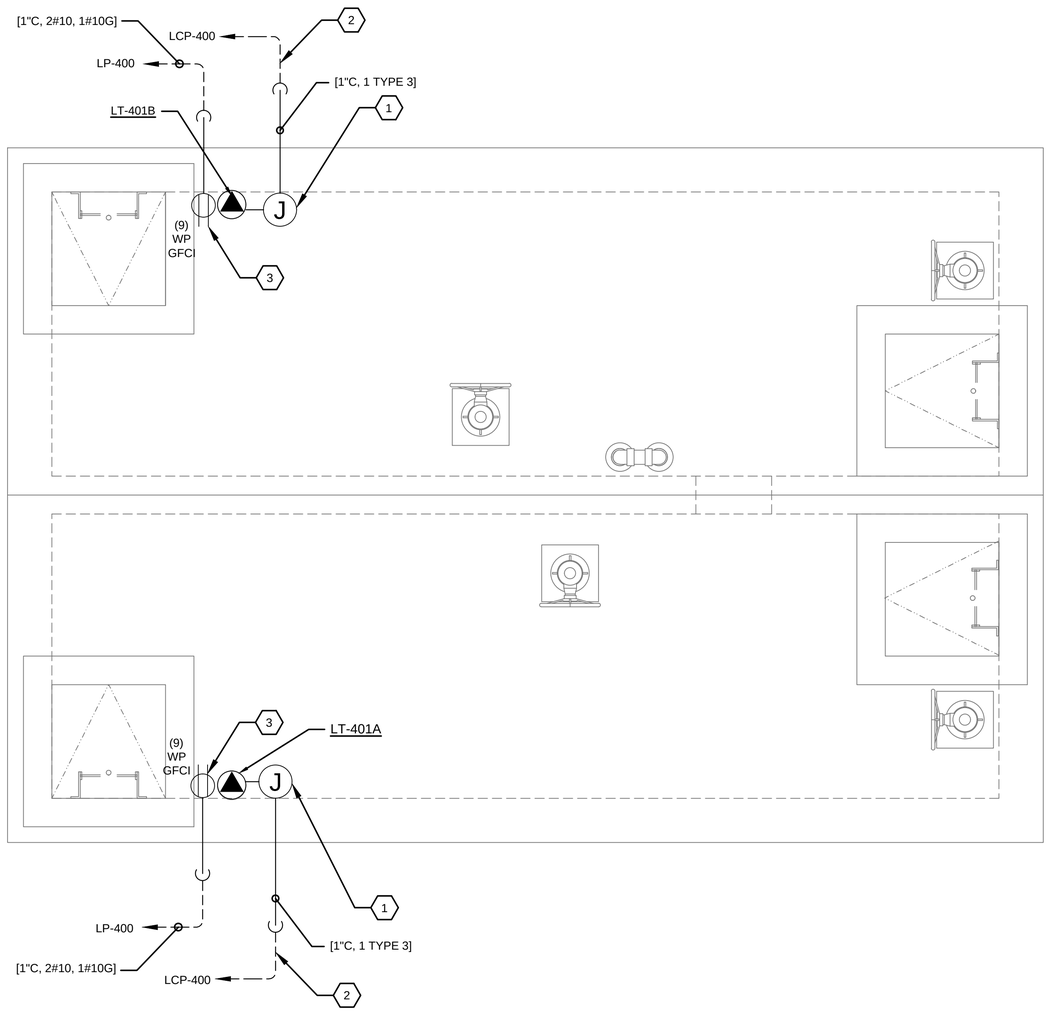

TOP PLAN

SCALE 1/2"=1'-0"

0 1 2 3

SCALE OF FEET

FULL SIZE DRAWINGS = 22"x34" 0" 1"
BAR MEASURES 1" LONG

JONATHAN B. JAMES
NEW MEXICO
18614
PROFESSIONAL ENGINEER

Digitally signed by Jonathan James
Date: 2025.04.11 12:33:41-06'00'

DESIGNED: J. JAMES	SUB SHEET NO.	TITLE OF SHEET	DRAWING NO. 315
CADD I. KHAN	15E101	ELECTRICAL ENTRANCE ROAD WATER TANK TOP PLAN BANDELIER NATIONAL MONUMENT	182751
TECH. REVIEW: J. LANDMAN			PMIS/PKG NO. 266697
DATE: 04/11/2025			SHEET 202 OF 203

3/25/2025 12:15 PM ACUGLIAT R24 15E101_D3167658.DWG

PUMP POWER CORD TO 120 V OUTLET, PHOTO 1B

REMOVE AND REPLACE PRESSURE BOOSTER LIKE FOR LIKE OR EQUAL TYP 2, SIMILAR TO THOSE AT ABERT'S SQUIRREL AND BLACK BEAR LOOPS AND PER DETAIL A, SEE NOTE 3

ABERT'S SQUIRREL COMFORT STATION UTILITY CLOSET

1A NTS

PUMP POWER CORD TO 120 V OUTLET

BLACK BEAR COMFORT STATION UTILITY CLOSET

2A NTS

DIMENSIONING TYPICAL FOR ABERT'S SQUIRREL. BLACK BEAR, AND COYOTE LOOP, SEE NOTE 1

COYOTE LOOP COMFORT STATION UTILITY CLOSET

3A NTS

REPLACE COPPER DISCHARGE PIPING AND RECONNECT, TYP

REPLACE PRESSURE BOOSTER SYSTEM INSTALL PER MANUFACTURERS RECOMMENDATIONS, TYP, DETAIL A

REPLACE COPPER SUCTION PIPING AND RECONNECT, TYP

REPLACE PIPE INSULATION, TYP

PUMP POWER CORD TO 120 V OUTLET, PHOTO 1A

ABERT'S SQUIRREL COMFORT STATION UTILITY CLOSET

1B NTS

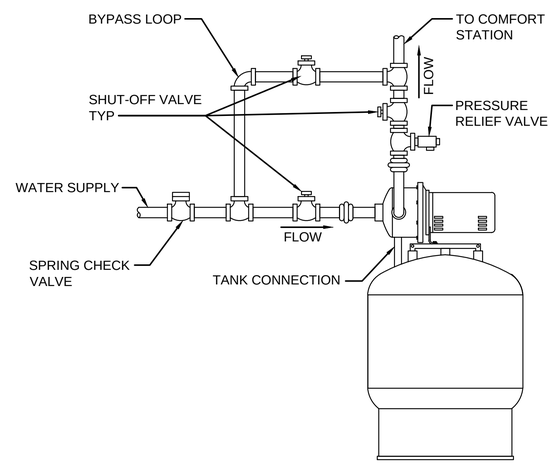

TYPICAL PRESSURE BOOSTER INSTALLATION

A NTS

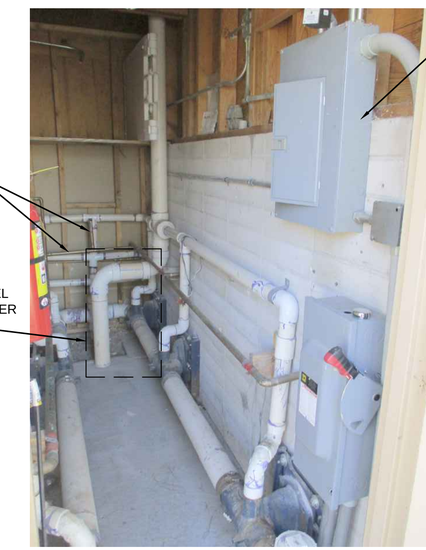

REFER TO ELECTRICAL DRAWING 02E509 FOR MORE DETAIL

MODIFY EXST COPPER PIPING TO SUCTION AND DISCHARGE OF PRESSURE BOOSTER SYSTEM

INSTALL NEW PRESSURE BOOSTER SYSTEM, SIMILAR TO THOSE AT ABERT'S SQUIRREL AND BLACK BEAR LOOPS AND PER DETAIL A, NOTE 3

COYOTE LOOP COMFORT STATION UTILITY CLOSET

3B NTS

SCALE A 0 1 2 3 SCALE OF FEET

NOTES:

1. CONTRACTOR SHALL FIELD VERIFY ALL DIMENSIONS PRIOR TO INSTALL.
2. CONTRACTOR SHALL READ AND FOLLOW MANUFACTURER'S PRESSURE BOOSTER INSTALLATION AND OPERATING INSTRUCTIONS PRIOR TO INSTALL.
3. PRESSURE BOOSTER SYSTEM FOR ALL THREE LOCATIONS SHALL BE THE SAME PRODUCT. ALL THREE COMFORT STATIONS; ABERT'S SQUIRREL, BLACK BEAR AND COYOTE LOOP, ALL SIMILAR INSTALLATIONS.
4. SEE SPECIFICATION WITH 22 30 00 PLUMBING EQUIPMENT.

BRYOR WAYNE PRICE NEW MEXICO 27845 PROFESSIONAL ENGINEER

04-09-2025

DESIGNED: J WICKS	SUB SHEET NO.	TITLE OF SHEET PROCESS MECHANICAL	DRAWING NO. 315 182751
CADD J WILCOX	30M101	MESA TOP COMFORT STATION PRESSURE BOOSTERS	PMIS/PKG NO. 266697
TECH. REVIEW: L. FETTKETHER		BANDELIER NATIONAL MONUMENT	SHEET 203 OF 203
DATE: 04/11/2025			

4/4/2025 10:57 AM C:\TEMP\PW_WORK\EST-LS\DMS71482\30M101_D3167658.DWG 23.1s (lms tech)