CLIN 0001 - MAIN PARK WATER SYSTEM: NEW UNDERGROUND TANK, MECHANICAL BUILDING, YARD PIPING AND SITE WORK. FOR DETAILS SEE SPECIFICATION 01 27 00.

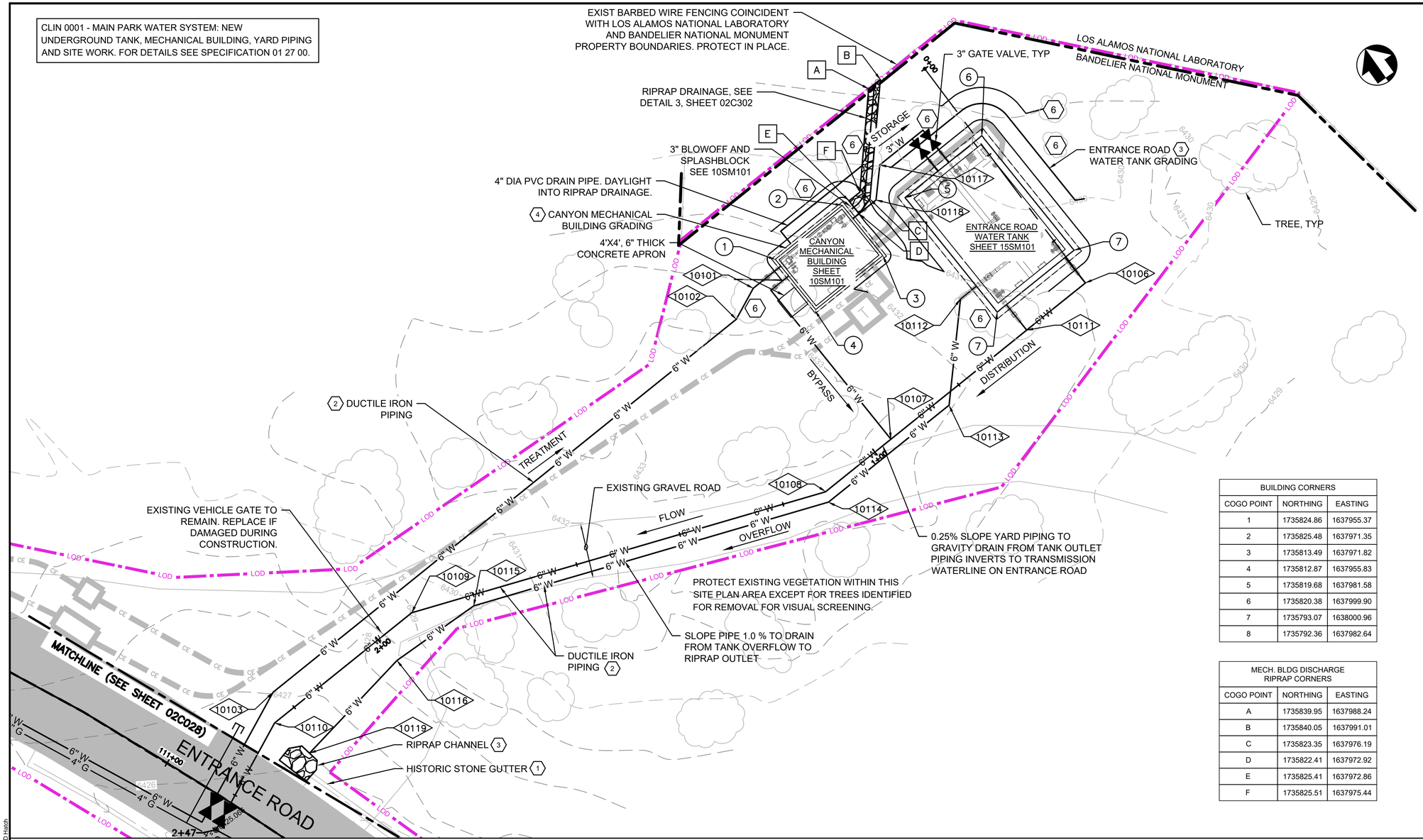

BUILDING CORNERS		
COGO POINT	NORTHING	EASTING
1	1735824.86	1637955.37
2	1735825.48	1637971.35
3	1735813.49	1637971.82
4	1735812.87	1637955.83
5	1735819.68	1637981.58
6	1735820.38	1637999.90
7	1735793.07	1638000.96
8	1735792.36	1637982.64

MECH. BLDG DISCHARGE RIPRAP CORNERS		
COGO POINT	NORTHING	EASTING
A	1735839.95	1637988.24
B	1735840.05	1637991.01
C	1735823.35	1637976.19
D	1735822.41	1637972.92
E	1735825.41	1637972.86
F	1735825.51	1637975.44

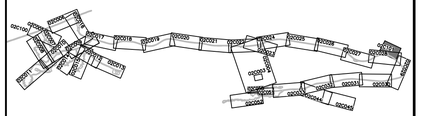

KEYPLAN

SHEET KEYNOTES

1. PROTECT HISTORIC STONE GUTTER IN PLACE. SEE NOTES ON SHEET 00G003 AND SPECIFICATION SECTION 01 35 91.
2. ALL PIPES TO BE 6" DUCTILE IRON PIPE FOR YARD PIPING FROM ENTRANCE ROAD CONNECTION TO BUILDING, TANK AND FOR OVERFLOW PIPE, UNLESS OTHERWISE SHOWN.
3. INSTALL RIPRAP CHANNEL PER DETAIL 2, SHEET 02C302. INSTALL DUCKBILL VALVE AT OUTLET.
4. FINISHED GRADE AROUND BUILDING TO BE 6432.5'. GRADE MIN. 3.1% SLOPE AWAY FROM BUILDING.
5. FINISHED GRADE AROUND TANK TO BE 6432.0'. GRADE 3:1 SLOPE AWAY FROM TANK.
6. TREES THAT MAY BE REMOVED BY CONTRACTOR. ADDITIONAL TREES MAY BE REMOVED ONLY WITH PERMISSION FROM CONTRACTING OFFICER AND PARK STAFF. EACH TREE REMOVED OR DAMAGED IS TO BE REPLACED AT THE LOCATION DESIGNATED BY THE CONTRACTING OFFICER OR CULTURAL RESOURCES PARK MANAGER AT NO ADDITIONAL COST TO THE GOVERNMENT. REFER TO SECTION 32 93 00, PLANTS.

COGO POINT TABLE			
COGO POINT	DESCRIPTION	NORTHING	EASTING
10109	6" 22.5° BEND	1735812.45	1637861.89
10101	6" 22.5° BEND	1735822.98	1637948.87
10110	6" 22.5° BEND	1735811.21	1637829.18
10102	6" 22.5° BEND	1735820.24	1637942.90
10103	6" 22.5° BEND	1735815.98	1637832.37
10106	6" 90° BEND	1735786.93	1637999.02
10107	6"X6" TEE	1735785.18	1637952.65
10108	6" 22.5° BEND	1735784.59	1637937.06
10111	6"X6" TEE	1735786.40	1637985.03
10112	6" 45° BEND	1735798.38	1637978.60
10113	6" 45° BEND	1735783.80	1637965.11
10114	6" 22.5° BEND	1735782.72	1637936.35
10115	6" 22.5° BEND	1735806.60	1637871.92
10116	6" 11.25° BEND	1735806.96	1637854.39
10117	3" 45° BEND	1735827.37	1637981.46
10118	3" 45° BEND	1735822.54	1637976.99
10119	6" DUCKBILL VALVE	1735802.83	1637831.05

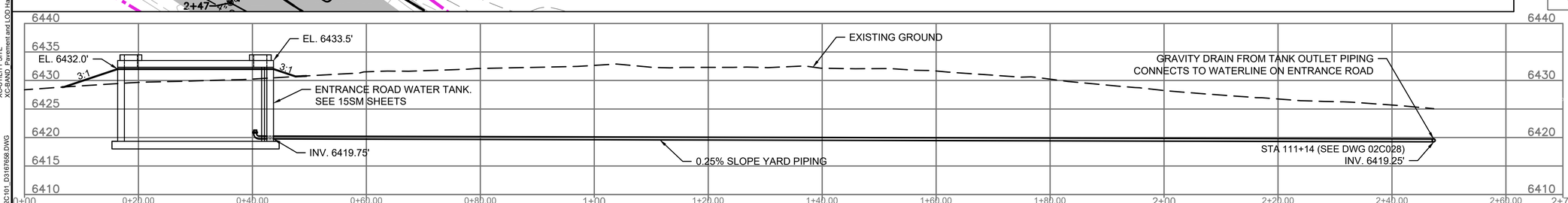

10 0 10 20 1" = 10'
HORIZ: SCALE OF FEET

10 0 10 20 1" = 10'
VERT: SCALE OF FEET

FULL SIZE DRAWINGS = 22"x34" 0" 1"
BAR MEASURES 1" LONG

MICAH E. JOHNSON
NEW MEXICO
25223
Digitally signed by Micah E. Johnson
Date: 2025.04.08 12:03:47-06'00'
PROFESSIONAL ENGINEER

DESIGNED: M. COUTURE	SUB SHEET NO.	TITLE OF SHEET: CIVIL	DRAWING NO. 315 182751
CADD J. FIGUEROA	02C101	ENTRANCE ROAD WATER TANK SITE PLAN	PMIS/PKG NO. 266697
TECH. REVIEW: D. HUANG		BANDELIER NATIONAL MONUMENT	SHEET 75 OF 203
DATE: 04/11/2025			

XG-Border_BAND
XC-CIVIL SHEETS
XC-BAND PROFILES
XC-BAND_2D-EG-Master
XC-ROADWAY
XC-ENTRANCE ROAD Proposed and Existing Master
001_S201_2dDn01_D3167658
001_S101_2dDn01_D3167658
XC-UTILITY SITE
XC-BAND_Pavement and LOD Hatch

3/30/2025 7:54 PM FIGUEROAJ R24 02C101 D3167658.DWG

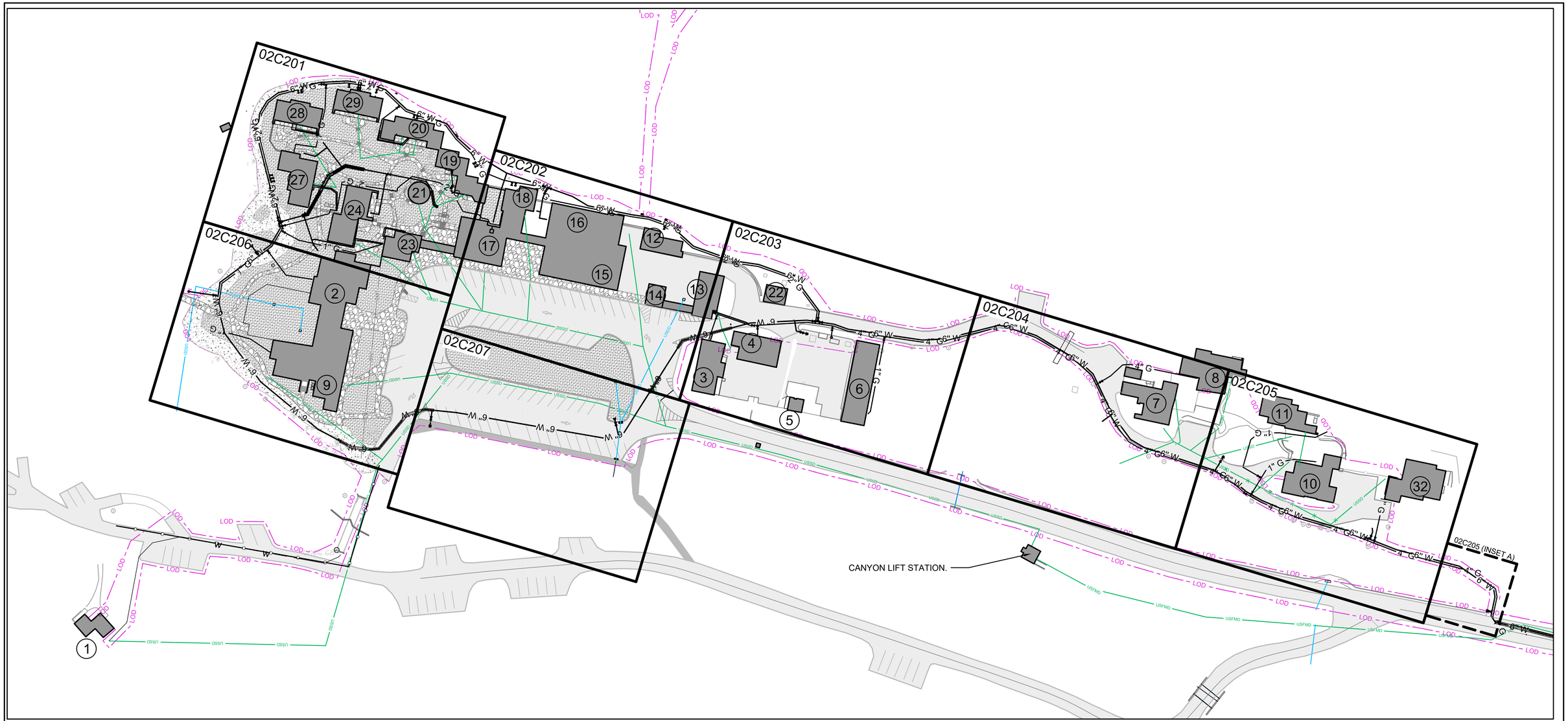

BUILDING TABLE INDEX	
1	COMFORT STATION
2	VISITOR CENTER
3	MAINTENANCE WAREHOUSE
4	CARPENTRY AND WELDING SHOP
5	GAS AND OIL HOUSE
6	EQUIPMENT SHED
7	RESIDENCE 1
8	RESIDENCE 2
9	COMFORT STATION
10	QUARTERS/GARAGE (RANGER DORM)
11	RESIDENCE 3
12	STORAGE
13	TRAINING ROOM
14	OFFICE STORAGE
15	OFFICES (DINING ROOM, KITCHEN, LUNCHROOM)
16	OFFICES (EMPLOYEE DORM)
17	SNACK BAR AND CURIO SHOP (LODGE LOBBY/SALESROOM)
18	OFFICES (OPERATOR'S RESIDENCE)
19	QUARTERS (CABIN GROUP A)
20	QUARTERS (CABIN GROUP B)
21	LAUNDRY AND STORAGE (LINEN STORAGE/BOILER ROOM)
22	BACKUP DIESEL GENERATOR
23	OFFICES (CABIN GROUP D)
24	QUARTERS AND OFFICES (CABIN GROUP D)
25	STABLE (STABLE AND QUARTERS)
26	ENTRANCE STATION
27	QUARTERS (CABIN GROUP E-1/LINENS)
28	QUARTERS (CABIN GROUP E-2)
29	LIBRARY AND STORAGE (CABIN GROUP E-3)
30	FIRE LOOKOUT AND QUARTERS
31	NOT USED
32	RESIDENCE 4

50 0 50 100 1" = 50'
SCALE OF FEET

FULL SIZE DRAWINGS = 22"x34" 0" 1"
BAR MEASURES 1" LONG

MICAH E. JOHNSON
NEW MEXICO
25223
Digitally signed by Micah E. Johnson
Date: 2025.04.08 17:04:30-06'00'
PROFESSIONAL ENGINEER

DESIGNED:	M. JOHNSON
CADD	E. SHERIFI
TECH. REVIEW:	D. HUANG
DATE:	04/11/2025

SUB SHEET NO. 02C200

TITLE OF SHEET
CIVIL
CANYON SERVICE LATERALS OVERVIEW
BANDELIER NATIONAL MONUMENT

DRAWING NO. 315 182751
PMIS/PKG NO. 266697
SHEET 76 OF 203

XG-Border_BAND
XC-LAYOUT-SHEETS
XC-BAND_PROFILES
XC-BAND_02C-Shelter
XC-LAYOUT-SHEETS - CANNYON AREA
XC-UTILITY SITE
XC-BAND_Water
XC-BAND_Pavement and LOD Hatch

3/30/2025 9:24 PM F:\GUERO\AJ B24 02C200-02C207 D3167658.DWG

GAS SERVICE LATERAL (1) (2)

WATER SERVICE LATERAL (3) (4)

GAS SERVICE LATERAL, TYP (1) (2)

2" BALL VALVE (2) TYP.

INSTALL TWO (2) STUB-OUTS (2) TYP.

INSTALL TWO (2) STUB-OUTS (2) TYP.

INSTALL TWO (2) STUB-OUTS EACH (2) TYP.

SEE SHEETS 02C034 TO 02C043 FOR WATERLINE PLAN AND PROFILE AND NATURAL GAS PLAN VIEW.

CUT AND PLUG EXIST WATERLINE

REPLACE APPROX. 45 LF OF 4" SS LATERAL (7)

CUT AND PLUG EXIST WATERLINE

REPLACE APPROX. 65 LF OF 4" SS LATERAL. (7)

REPLACE APPROX. 40 LF OF 4" SS LATERAL. (7)

REPLACE APPROX. 40 LF OF 4" SS LATERAL. (7)

DEMOLISH FIRE HYDRANT AND VALVE. INSTALL BLIND FLANGE AT VALVE FLANGE AND ABANDON PIPING IN PLACE.

WATER SERVICE LATERAL TO METER BANK #3 (3) (4)

DEMOLISH FIRE HYDRANT AND VALVE. INSTALL BLIND FLANGE AT VALVE FLANGE AND ABANDON PIPING IN PLACE.

4" GATE VALVE

REPLACE MANHOLE (7)

SANITARY SEWER REPLACEMENT. SEE SHEET 02C0500.

CLSM ENCASE. (6)

WATER SERVICE LATERAL TO METER BANK # 4 (3) (4)

REPLACE APPROX. 70 LF OF 4" SS LATERAL. (7)

REPLACE 1" YARD HYDRANT AND VALVE PER DETAILS 1 SHEET 02C301. EXTEND SERVICE FROM NEW 1" HDPE LATERAL

REPLACE 1" YARD HYDRANT AND VALVE. EXTEND SERVICE FROM NEW 1" HDPE LATERAL

EXIST GAS REGULATOR/METER ASSEMBLY TO BE RELOCATED TO FOC BLDG. SEE SHEET 02C013

DEMOLISH FIRE HYDRANT AND VALVE. INSTALL BLIND FLANGE AT VALVE FLANGE AND ABANDON PIPING IN PLACE.

INSTALL THREE (3) STUB-OUTS (2) TYP.

REPLACE APPROX. 25 LF OF 4" SS LATERAL. (7)

REPLACE MANHOLE. (7)

REPLACE APPROX. 30 LF OF 4" SS LATERAL. (7)

REPLACE MANHOLE. SEE SHEET 02C050 (7)

WATER SERVICE LATERAL TO METER BANK #2 (3) (4)

COURTYARD WALL. (5)

REPLACE APPROX. 55 LF OF 4" SS LATERAL. (7)

GAS SERVICE LATERAL, TYP (1) (2)

6" GATE VALVE

SANITARY SEWER REPLACEMENT. SEE SHEET 02C050.

WATER SERVICE LATERAL TO METER BANK #1 (3) (4)

REPLACE APPROX. 100 LF OF 4" SS LATERAL AND INTERMEDIATE CLEANOUT. (7)

MATCHLINE (SEE SHEET 02C206)

MATCHLINE (SEE SHEET 02C202)

CLIN OPTION B - FRIJOLES CANYON WATER AND NATURAL GAS LOOP: INCLUDES WATER AND GAS MAINS AND WATER SERVICE LATERALS. FOR DETAILS SEE SPECIFICATION 01 27 00.

CLIN OPTION C - FRIJOLES CANYON WASTEWATER SYSTEM: INCLUDES MANHOLE, CLEANOUT AND SANITARY SEWER LATERAL REPLACEMENTS. FOR DETAILS SEE SPECIFICATION 01 27 00.

CLIN OPTION D - FRIJOLES CANYON NATURAL GAS LATERALS: INCLUDES SERVICE LINE REPLACEMENT TO REGULATOR/METER. FOR DETAILS SEE SPECIFICATION 01 27 00.

KEYPLAN

CANYON SERVICE LATERALS KEYPLAN

SHEET KEYNOTES

(1) ALL NEW BUILDING NATURAL GAS SERVICE CONNECTIONS THIS SHEET TO HAVE NEW ANODELESS RISER AND PLUG VALVE. CONNECT TO EXISTING REGULATOR/METER ASSEMBLIES. REFER TO DWG 02C501 - 02C507 FOR SERVICE CONNECTION DETAILS.

(2) ALL NEW NATURAL GAS TEES TO HAVE BALL VALVE PER DETAIL 2, SHEET 02C501 ON SERVICE LINES AS SHOWN ON DWG. MATCH BALL VALVE TO PIPE SIZE.

(3) CONNECT NEW WATER SERVICE LATERALS TO EXIST WATER METER ASSEMBLIES AS SHOWN PER DETAILS 4 - 8, SHEET 02C301. SERVICE LATERALS TO WATER METER CLUSTERS (2 OR MORE) TO BE 4" DIA. SERVICE LATERALS TO SINGLE WATER METERS TO 1" DIA. UNLESS NOTED OTHERWISE. CONSTRUCT UNMETERED STUB-OUT UPSTREAM OF METER CLUSTER FOR FUTURE SPRINKLER DISTRIBUTION SYSTEM (BY OTHERS).

(4) INSTALL NEW WATER METERS, SETTERS, VALVES AND CANS.

(5) COURTYARD WALL APPROX. 3' TALL. PROTECT IN PLACE. CONTRACTOR TO REPLACE IN KIND IF DAMAGED AT NO EXPENSE TO GOVERNMENT. CONTRACTOR TO CONSTRUCT NEW UTILITIES BENEATH CONCRETE WALL.

(6) ENCASE WATERLINE MAIN IN CLSM 10' ON EACH SIDE OF SEWER CROSSING AND WHEN PARALLELING SEWER LINE WITHIN 10'. SEE DETAIL 5, SHEET 02C300. PLACE WATERLINE MAIN JOINTS AS FAR AS POSSIBLE WHEN CROSSING BENEATH SEWER.

(7) REPLACE MANHOLE AND SS LATERALS. REPLACE LATERALS UP TO 5 FEET OF BLDG OR TO CLEANOUT, WHICHEVER IS CLOSEST TO BLDG. SEE DETAIL 1, SHEET 02C304. CONNECTION TO BLDG AND CLEANOUTS TO BE FIELD LOCATED. CONSTRUCT NEW SANITARY SEWER WITH SAME ELEVATION, SLOPE AND ALIGNMENT UNLESS OTHERWISE SHOWN.

COGO POINT TABLE			
COGO POINT	DESCRIPTION	NORTHING	EASTING
2011	4"x4" TEE	1738954.95	1634268.84
2012	4" 45° BEND	1738953.48	1634272.66
2013	4" 22.5° & 4" 11.25° BEND	1738971.85	1634313.58
2014	4"x4" TEE	1738970.29	1634329.41
2015	4" 45° BEND	1738969.90	1634333.05
2016	4" 45° BEND	1738908.10	1634389.49
2017	4" 22.5° BEND	1738898.45	1634389.10
2018	4" 45° BEND	1738884.61	1634381.87

XG-Border_BAND
XC-BAND_SURFACE FEATS
XC-BAND PROFILES
XC-BAND_2D-EG-Master
XC-LAYOUT-SHEETS - CANYON AREA
XC-UTILITY SITE
XC-ROADWAY
XC-BAND_Pavement and LOD Hatch

3/30/2025 9:25 PM FIGUEROAJ B24 02C200-02C207 D3167658.DWG

FULL SIZE DRAWINGS = 22"x34" 0" 1"
BAR MEASURES 1" LONG

10 0 10 20
SCALE OF FEET
1" = 10'

MICAH E. JOHNSON NEW MEXICO 25223 PROFESSIONAL ENGINEER
Digitally signed by Micah E. Johnson
Date: 2025.04.08 12:05:10-06'00'

DESIGNED:	M. JOHNSON
CADD	E. SHERIFI
TECH. REVIEW:	D. HUANG
DATE:	04/11/2025

SUB SHEET NO. 02C201

TITLE OF SHEET
CIVIL
CANYON SERVICE LATERALS SITE PLAN (1 OF 7)
BANDELIER NATIONAL MONUMENT

DRAWING NO. 315 182751
PMIS/PKG NO. 266697
SHEET 77 OF 203

WATER SERVICE LATERAL (3) (4)

INSTALL TWO (2) STUB-OUTS (2)

WATER SERVICE LATERAL (3) (4)

CUT AND PLUG EXIST WATERLINE AND GAS LINE

SEE SHEETS 02C034 TO 02C043 FOR WATERLINE PLAN AND PROFILE AND NATURAL GAS PLAN VIEW.

GAS SERVICE LATERAL (1) (2)

RETAINING WALL (5)

WATER SERVICE LATERAL TO METER BANK #6 (3) (4)

REMOVE AND RELOCATE GAS REGULATOR TO BLDG 9 SERVICE. DEMOLISH EXPOSED GAS PIPING

WATER SERVICE LATERAL TO METER BANK #5 (3) (4)

WATER SERVICE LATERAL TO METER BANK #7 (3) (4)

DEMOLISH FIRE HYDRANT AND VALVE. INSTALL BLIND FLANGE AT VALVE FLANGE AND ABANDON PIPING IN PLACE.

INSTALL GAS LINE THROUGH EXISTING GAS LINE WALL PENETRATION.

REPLACE EXPOSED 1.5" STEEL GAS LINE SERVING HVAC UNIT

MATCHLINE (SEE SHEET 02C201)

MATCHLINE (SEE SHEET 02C203)

REPLACE GREASE TRAP IN KIND.

REPLACE APPROX. 120 LF OF 4" SS LATERAL AND INTERMEDIATE (6) CLEANOUT.

REPLACE APPROX. 110 LF OF 4" SS LATERAL AND INTERMEDIATE CLEANOUT. (6)

SANITARY SEWER REPLACEMENT. SEE SHEETS 02C050 AND 02C051

REPLACE APPROX. 30 LF OF 4" SS LATERAL TO GREASE TRAP. (6)

SANITARY SEWER REPLACEMENT. SEE SHEET 02C050

CLIN OPTION B - FRIJOLES CANYON WATER AND NATURAL GAS LOOP: INCLUDES WATER AND GAS MAINS AND WATER SERVICE LATERALS. FOR DETAILS SEE SPECIFICATION 01 27 00.

CLIN OPTION C - FRIJOLES CANYON WASTEWATER SYSTEM: INCLUDES MANHOLE, CLEANOUT AND SANITARY SEWER LATERAL REPLACEMENTS. FOR DETAILS SEE SPECIFICATION 01 27 00.

CLIN OPTION D - FRIJOLES CANYON NATURAL GAS LATERALS: INCLUDES SERVICE LINE REPLACEMENT TO REGULATOR/METER. FOR DETAILS SEE SPECIFICATION 01 27 00.

MATCHLINE (SEE SHEET 02C207)

KEYPLAN

CANYON SERVICE LATERALS KEYPLAN

SHEET KEYNOTES

(1) ALL NEW BUILDING NATURAL GAS SERVICE CONNECTIONS THIS SHEET TO HAVE NEW ANODELESS RISER AND PLUG VALVE. CONNECT TO EXISTING REGULATOR/METER ASSEMBLIES. REFER TO DWG 02C501 - 02C507 FOR SERVICE CONNECTION DETAILS.

(2) ALL NEW NATURAL GAS TEES TO HAVE BALL VALVE PER DETAIL 2, SHEET 02C501 ON SERVICE LINES AS SHOWN ON DWG. MATCH BALL VALVE TO PIPE SIZE.

(3) CONNECT NEW WATER SERVICE LATERALS TO EXIST WATER METER ASSEMBLIES AS SHOWN PER DETAILS 4 - 8, SHEET 02C301. SERVICE LATERALS TO WATER METER CLUSTERS (2 OR MORE) TO BE 4" DIA. SERVICE LATERALS TO SINGLE WATER METERS TO 1" DIA. UNLESS NOTED OTHERWISE. CONSTRUCT UNMETERED STUB-OUT UPSTREAM OF METER CLUSTER FOR FUTURE SPRINKLER DISTRIBUTION SYSTEM (BY OTHERS).

(4) INSTALL NEW WATER METERS, SETTERS, VALVES AND CANS.

(5) RETAINING WALL APPROX. 6' TALL. PROTECT IN PLACE. CONTRACTOR TO REPLACE IN KIND IF DAMAGED AT NO EXPENSE TO GOVERNMENT. CONTRACTOR TO CONSTRUCT NEW UTILITIES BENEATH RETAINING WALL.

(6) REPLACE MANHOLE AND SS LATERALS. REPLACE LATERALS UP TO 5 FEET OF BLDG OR TO CLEANOUT, WHICHEVER IS CLOSEST TO BLDG. SEE DETAIL 1, SHEET 02C304. CONNECTION TO BLDG AND CLEANOUTS TO BE FIELD LOCATED. CONSTRUCT NEW SANITARY SEWER WITH SAME ELEVATION, SLOPE AND ALIGNMENT UNLESS OTHERWISE SHOWN.

10 0 10 20 1" = 10'
SCALE OF FEET

XG-Border_BAND
XC-LAYOUT-SHEETS
XC-BAND PROFILES
XC-BAND_DG-Master
XC-LAYOUT-SHEETS - CANYON AREA
XC-UTILITY SITE
XC-ROADWAY
XC-BAND_Pavement and LOD Hatch

3/30/2025 9:26 PM F:\GUERO\AJ B24 02C200-02C207 D3167658.DWG

FULL SIZE DRAWINGS = 22"x34" 0" 1"
BAR MEASURES 1" LONG

MICAH E. JOHNSON NEW MEXICO 25223 PROFESSIONAL ENGINEER
Digitally signed by Micah E. Johnson
Date: 2025.04.08 17:06:01-06'00'

DESIGNED:	SUB SHEET NO.	TITLE OF SHEET	DRAWING NO.
M. JOHNSON	02C202	CIVIL CANYON SERVICE LATERALS SITE PLAN (2 OF 7) BANDELIER NATIONAL MONUMENT	315 182751
CADD: E. SHERIFI			PMIS/PKG NO. 266697
TECH. REVIEW: D. HUANG			SHEET 78 OF 203
DATE: 04/11/2025			

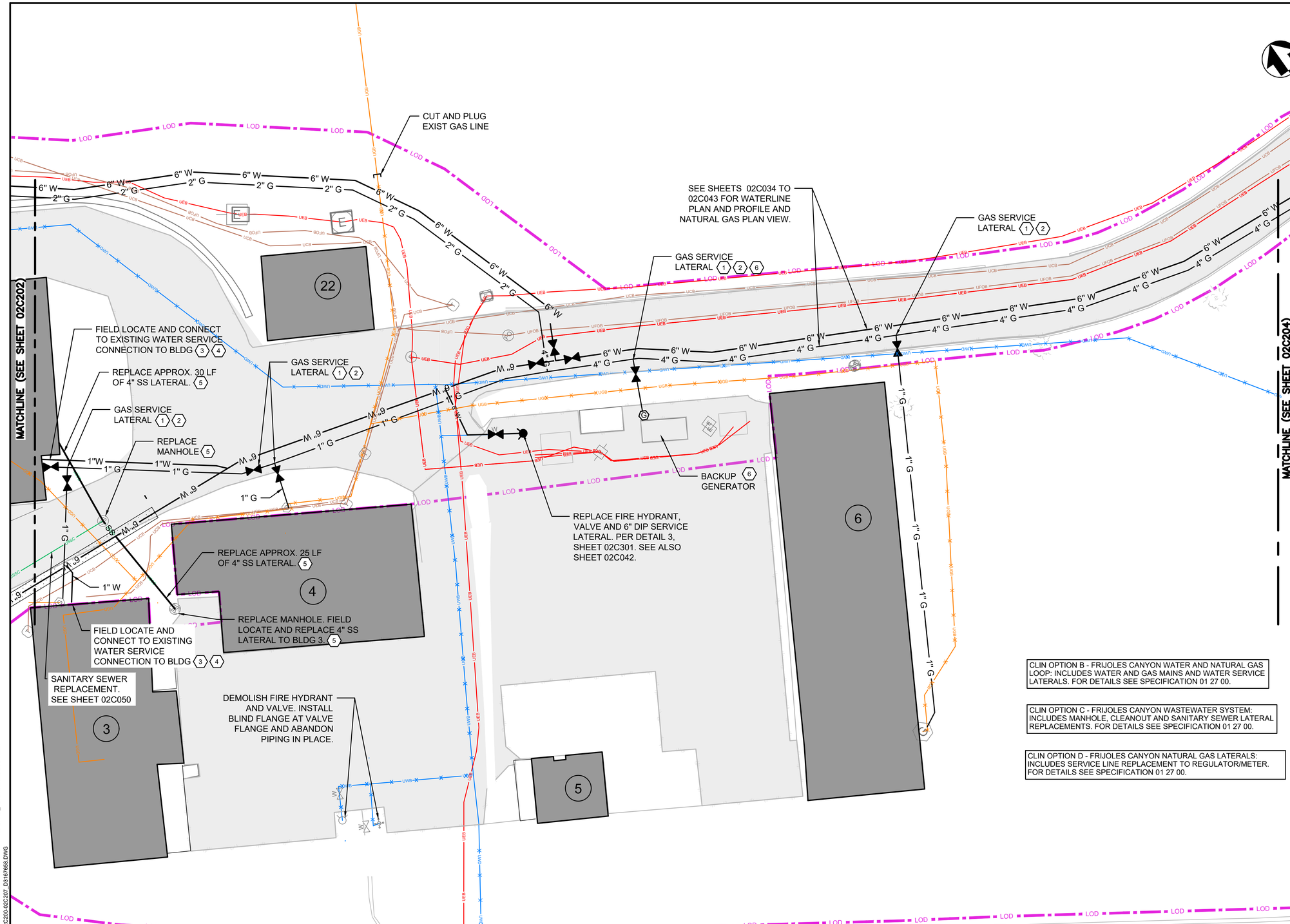

CLIN OPTION B - FRIJOLES CANYON WATER AND NATURAL GAS LOOP: INCLUDES WATER AND GAS MAINS AND WATER SERVICE LATERALS. FOR DETAILS SEE SPECIFICATION 01 27 00.

CLIN OPTION C - FRIJOLES CANYON WASTEWATER SYSTEM: INCLUDES MANHOLE, CLEANOUT AND SANITARY SEWER LATERAL REPLACEMENTS. FOR DETAILS SEE SPECIFICATION 01 27 00.

CLIN OPTION D - FRIJOLES CANYON NATURAL GAS LATERALS: INCLUDES SERVICE LINE REPLACEMENT TO REGULATOR/METER. FOR DETAILS SEE SPECIFICATION 01 27 00.

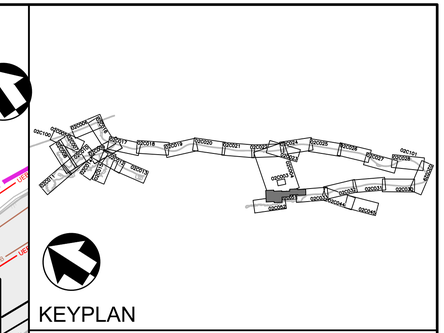
KEYPLAN

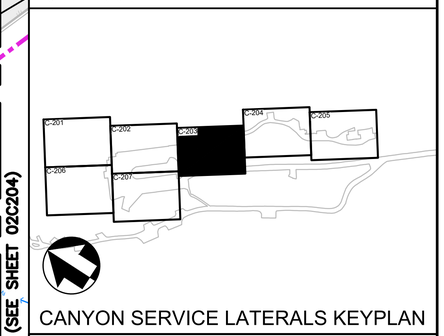
CANYON SERVICE LATERALS KEYPLAN

SHEET KEYNOTES

1. ALL NEW BUILDING NATURAL GAS SERVICE CONNECTIONS THIS SHEET TO HAVE NEW ANODELESS RISER AND PLUG VALVE. CONNECT TO EXISTING REGULATOR/METER ASSEMBLIES. REFER TO DWG 02C501 - 02C507 FOR SERVICE CONNECTION DETAILS.
2. ALL NEW NATURAL GAS TEES TO HAVE BALL VALVE PER DETAIL 2, SHEET 02C501 ON SERVICE LINES AS SHOWN ON DWG. MATCH BALL VALVE TO PIPE SIZE.
3. CONNECT NEW WATER SERVICE LATERALS TO EXIST WATER METER ASSEMBLIES AS SHOWN PER DETAILS 4 - 8, SHEET 02C301. SERVICE LATERALS TO WATER METER CLUSTERS (2 OR MORE) TO BE 4" DIA. SERVICE LATERALS TO SINGLE WATER METERS TO 1" DIA. UNLESS NOTED OTHERWISE. CONSTRUCT UNMETERED STUB-OUT UPSTREAM OF METER CLUSTER FOR FUTURE SPRINKLER DISTRIBUTION SYSTEM (BY OTHERS).
4. INSTALL NEW WATER METERS, SETTERS, VALVES AND CANS.
5. REPLACE MANHOLE AND SS LATERALS. REPLACE LATERALS UP TO 5 FEET OF BLDG OR TO CLEANOUT, WHICHEVER IS CLOSEST TO BLDG. SEE DETAIL 1, SHEET 02C304. CONNECTION TO BLDG AND CLEANOUTS TO BE FIELD LOCATED. CONSTRUCT NEW SANITARY SEWER WITH SAME ELEVATION, SLOPE AND ALIGNMENT UNLESS OTHERWISE SHOWN.
6. CONTRACTOR TO PROVIDE NEW PRESSURE REGULATOR/METER ASSEMBLY FOR BACKUP GENERATOR. GAS REGULATOR RATED AT 50 PSIG INLET AND 2 PSIG OUTLET PRESSURES. GENERATOR REGULATOR TO BE RATED AS 2,000 CFH.

10 0 10 20 1" = 10'
SCALE OF FEET

FULL SIZE DRAWINGS = 22"x34" 0" 1"
BAR MEASURES 1" LONG

MICAH E. JOHNSON NEW MEXICO 25223 PROFESSIONAL ENGINEER
Digitally signed by Micah E. Johnson Date: 2025.04.08 17:06:42-06'00'

DESIGNED: M. JOHNSON	SUB SHEET NO.	TITLE OF SHEET	DRAWING NO. 315 182751
CADD E. SHERIFI	02C203	CIVIL CANYON SERVICE LATERALS SITE PLAN (3 OF 7)	PMIS/PKG NO. 266697
TECH. REVIEW: D. HUANG		BANDELIER NATIONAL MONUMENT	SHEET 79 OF 203
DATE: 04/11/2025			

XG-Border_BAND
XC-LAYOUT-SHEETS
XC-BAND PROFILES
XC-BAND_2D-EG-Master
XC-LAYOUT-SHEETS - CANNYON AREA
XC-UTILITY SITE
XC-ROADWAY
XC-BAND_Pavement and LOD Hatch

3/30/2025 9:27 PM FIGUEROAJ R24 02C200-02C207_D3167658.DWG

MATCHLINE (SEE SHEET 02C203)

MATCHLINE (SEE SHEET 02C205)

SEE SHEETS 02C034 TO 02C043 FOR WATERLINE PLAN AND PROFILE AND NATURAL GAS PLAN VIEW.

GAS SERVICE LATERAL (1) (2)

REPLACE 1" YARD HYDRANT AND VALVE PER DETAIL 1, SHEET 02C301. EXTEND SERVICE FROM NEW 6" WATER MAIN

REPLACE APPROX. 50 LF OF 4" SS LATERAL. (3)

REPLACE SS MANHOLE. AND (3) SS LATERAL.

DEMOLISH AND BACKFILL UNUSED SEWER MANHOLE. GROUT INLET AND OUTLET PIPING.

DEMOLISH FIRE HYDRANT AND GATE VALVE

CLIN OPTION C - FRIJOLES CANYON WASTEWATER SYSTEM: INCLUDES MANHOLE, CLEANOUT AND SANITARY SEWER LATERAL REPLACEMENTS. FOR DETAILS SEE SPECIFICATION 01 27 00.

CLIN OPTION N - NATURAL GAS SYSTEM: GAS LATERALS TO STONEHOUSE ROAD HOUSING. FOR DETAILS SEE SPECIFICATION 01 27 00.

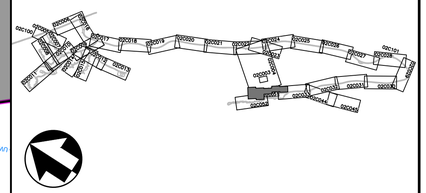

KEYPLAN

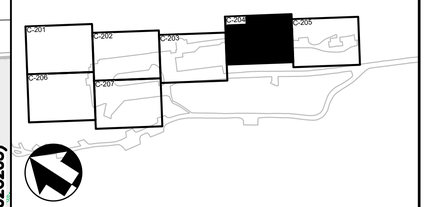

CANYON SERVICE LATERALS KEYPLAN

SHEET KEYNOTES

(1) ALL NEW BUILDING NATURAL GAS SERVICE CONNECTIONS THIS SHEET TO HAVE NEW ANODELESS RISER AND PLUG VALVE. CONNECT TO EXISTING REGULATOR/METER ASSEMBLIES. REFER TO DWG 02C501 - 02C507 FOR SERVICE CONNECTION DETAILS.

(2) ALL NEW NATURAL GAS TEES TO HAVE BALL VALVE PER DETAIL 2, SHEET 02C501 ON SERVICE LINES AS SHOWN ON DWG. MATCH BALL VALVE TO PIPE SIZE.

(3) REPLACE MANHOLE AND SS LATERALS. REPLACE LATERALS UP TO 5 FEET OF BLDG OR TO CLEANOUT, WHICHEVER IS CLOSEST TO BLDG. SEE DETAIL 1, SHEET 02C304. CONNECTION TO BLDG AND CLEANOUTS TO BE FIELD LOCATED. CONSTRUCT NEW SANITARY SEWER WITH SAME ELEVATION, SLOPE AND ALIGNMENT UNLESS OTHERWISE SHOWN.

10 0 10 20
SCALE OF FEET
1" = 10'

FULL SIZE DRAWINGS = 22"x34" 0" 1"
BAR MEASURES 1" LONG

MICAH E. JOHNSON NEW MEXICO 25223 PROFESSIONAL ENGINEER
Digitally signed by Micah E. Johnson
Date: 2025.04.08 12:07:23-06'00'

DESIGNED:	M. JOHNSON
CADD	E. SHERIFI
TECH. REVIEW:	D. HUANG
DATE:	04/11/2025

SUB SHEET NO. 02C204

TITLE OF SHEET
CIVIL
CANYON SERVICE LATERALS SITE PLAN (4 OF 7)
BANDELIER NATIONAL MONUMENT

DRAWING NO. 315 182751
PMIS/PKG NO. 266697
SHEET 80 OF 203

XG-Border_BAND
XC-LAYOUT-SHEETS
XC-BAND_PROFILES
XC-BAND_GAS-Meter
XC-LAYOUT-SHEETS - CANNYON AREA
XC-UTILITY SITE
XC-BAND_WATER
XC-BAND_Pavement and LOD Hatch

3/30/2025 9:28 PM F:\GUEROA\ J B24 02C200-02C207 D3167658.DWG

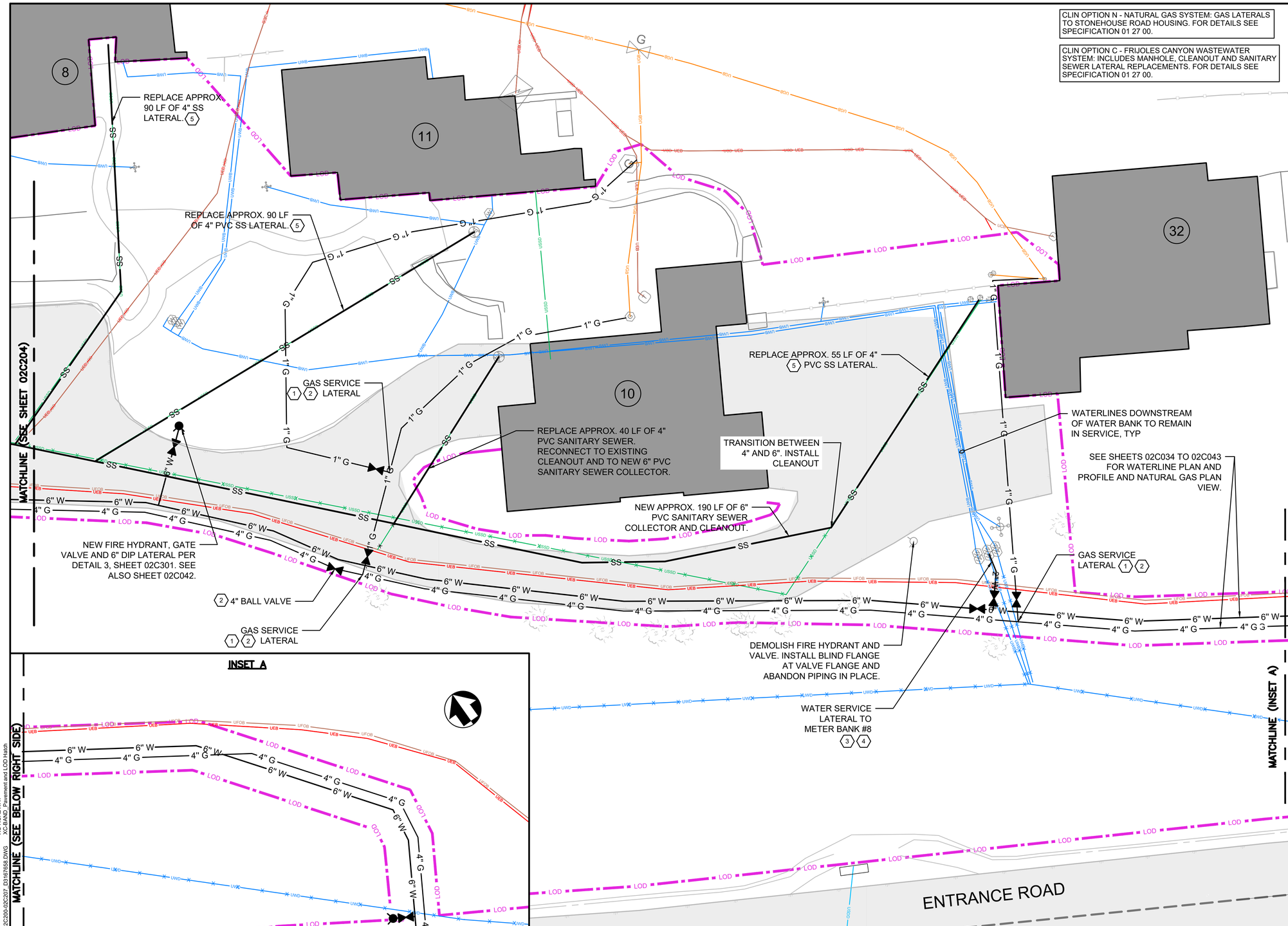

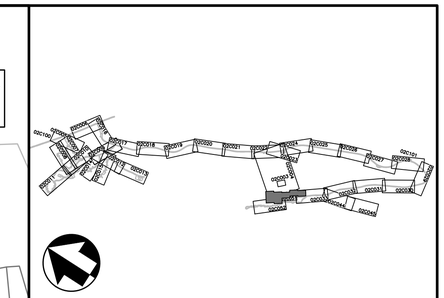

KEYPLAN

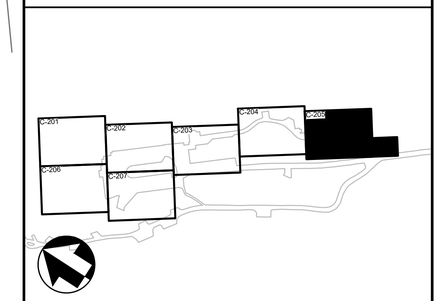

CANYON SERVICE LATERALS KEYPLAN

SHEET KEYNOTES

1. ALL NEW BUILDING NATURAL GAS SERVICE CONNECTIONS THIS SHEET TO HAVE NEW ANODELESS RISER AND PLUG VALVE. CONNECT TO EXISTING REGULATOR/METER ASSEMBLIES. REFER TO DWG 02C501 - 02C507 FOR SERVICE CONNECTION DETAILS.
2. ALL NEW NATURAL GAS TEES TO HAVE BALL VALVE PER DETAIL 2, SHEET 02C501 ON SERVICE LINES AS SHOWN ON DWG. MATCH BALL VALVE TO PIPE SIZE.
3. CONNECT NEW WATER SERVICE LATERALS TO EXIST WATER METER ASSEMBLIES AS SHOWN PER DETAILS 4 - 8, SHEET 02C301. SERVICE LATERALS TO WATER METER CLUSTERS (2 OR MORE) TO BE 4" DIA. SERVICE LATERALS TO SINGLE WATER METERS TO 1" DIA. UNLESS NOTED OTHERWISE. CONSTRUCT UNMETERED STUB-OUT UPSTREAM OF METER CLUSTER FOR FUTURE SPRINKLER DISTRIBUTION SYSTEM (BY OTHERS).
4. INSTALL NEW WATER METERS, SETTERS, VALVES AND CANS.
5. REPLACE MANHOLE AND SS LATERALS. REPLACE LATERALS UP TO 5 FEET OF BLDG OR TO CLEANOUT, WHICHEVER IS CLOSEST TO BLDG. SEE DETAIL 1, SHEET 02C304. CONNECTION TO BLDG AND CLEANOUTS TO BE FIELD LOCATED. CONSTRUCT NEW SANITARY SEWER WITH SAME ELEVATION, SLOPE AND ALIGNMENT UNLESS OTHERWISE SHOWN.

10 0 10 20
SCALE OF FEET
1" = 10'

FULL SIZE DRAWINGS = 22"x34" 0" 1"
BAR MEASURES 1" LONG

MICAH E. JOHNSON
NEW MEXICO
25223
Digitally signed by Micah E. Johnson
Date: 2025.04.08 17:08:29-06'00'
PROFESSIONAL ENGINEER

DESIGNED:	SUB SHEET NO.	TITLE OF SHEET	DRAWING NO.
M. JOHNSON	02C205	CIVIL	315
CADD		CANYON SERVICE LATERALS	182751
E. SHERIFI		SITE PLAN	PMIS/PKG NO.
TECH. REVIEW:		(5 OF 7)	266697
D. HUANG		BANDELIER NATIONAL MONUMENT	SHEET
DATE:			81 OF 203
04/11/2025			

XG-Border_BAND
XC-LAYOUT-SHEETS
XC-BAND PROFILES
XC-BAND_20-EG-Master
XC-LAYOUT-SHEETS - CANNYON AREA
XC-UTILITY SITE
XC-ROADWAY
XC-BAND_Pavement and LOD Hatch

3/30/2025 9:30 PM FIGUEROAJ R24 02C200-02C207_D3167658.DWG

MATCHLINE (SEE SHEET 02C201)

GAS SERVICE LATERAL (1) (2)

NEW FIRE HYDRANT, VALVE AND 6" DIP LATERAL PER DETAIL 3, SHEET 02C301. SEE ALSO SHEET 02C042.

INSTALL SERVICE LINE WITH GATE VALVE AND WATER BOTTLE FILLING STATION ADJACENT TO TELESCOPIC VIEWING AREA. FIELD LOCATE WITH PARK STAFF. SEE DETAIL 4, SHEET 02C303.

SEE SHEETS 02C034 TO 02C043 FOR WATERLINE PLAN AND PROFILE AND NATURAL GAS PLAN VIEW.

DEMOLISH FIRE HYDRANT AND VALVE. INSTALL BLIND FLANGE AT VALVE FLANGE AND ABANDON PIPING IN PLACE.

DEMOLISH FIRE HYDRANT AND VALVE. INSTALL BLIND FLANGE AT VALVE FLANGE AND ABANDON PIPING IN PLACE.

REPLACE MANHOLE AND SS LATERALS. (3)

SANITARY SEWER REPLACEMENT. SEE SHEET 02C052

MATCHLINE (SEE SHEET 02C207)

CLIN OPTION B - FRIJOLES CANYON WATER AND NATURAL GAS LOOP: INCLUDES WATER AND GAS MAINS AND WATER SERVICE LATERALS. FOR DETAILS SEE SPECIFICATION 01 27 00.

CLIN OPTION D - FRIJOLES CANYON NATURAL GAS LATERALS: INCLUDES SERVICE LINE REPLACEMENT TO REGULATOR/METER. FOR DETAILS SEE SPECIFICATION 01 27 00.

KEYPLAN

CANYON SERVICE LATERALS KEYPLAN

SHEET KEYNOTES

1. ALL NEW BUILDING NATURAL GAS SERVICE CONNECTIONS THIS SHEET TO HAVE NEW ANODELESS RISER AND PLUG VALVE. CONNECT TO EXISTING REGULATOR/METER ASSEMBLIES. REFER TO DWG 02C501 - 02C507 FOR SERVICE CONNECTION DETAILS.
2. ALL NEW NATURAL GAS TEES TO HAVE BALL VALVE PER DETAIL 2, SHEET 02C501 ON SERVICE LINES AS SHOWN ON DWG. MATCH BALL VALVE TO PIPE SIZE.
3. REPLACE MANHOLE AND SS LATERALS. REPLACE LATERALS UP TO 5 FEET OF BLDG OR TO CLEANOUT, WHICHEVER IS CLOSEST TO BLDG. SEE DETAIL 1, SHEET 02C304. CONNECTION TO BLDG AND CLEANOUTS TO BE FIELD LOCATED. CONSTRUCT NEW SANITARY SEWER WITH SAME ELEVATION, SLOPE AND ALIGNMENT UNLESS OTHERWISE SHOWN.

10 0 10 20
SCALE OF FEET
1" = 10'

XG-Border_BAND
XC-LAYOUT-SHEETS
XC-BAND_PROFILES
XC-BAND_PLAN_Waterline
XC-LAYOUT-SHEETS - CANYON AREA
XC-UTILITY_SITE
XC-BAND_Water
XC-BAND_Pavement and LOD Hatch

3/30/2025 9:31 PM FIGUEROA,I R24 02C200-02C207 D3167658.DWG

FULL SIZE DRAWINGS = 22"x34" 0" 1"
BAR MEASURES 1" LONG

MICAH E. JOHNSON NEW MEXICO 25223 PROFESSIONAL ENGINEER
Digitally signed by Micah E. Johnson
Date: 2025.04.08 17:09:12-06'00'

DESIGNED:	M. JOHNSON
CADD	E. SHERIFI
TECH. REVIEW:	D. HUANG
DATE:	04/11/2025

SUB SHEET NO. 02C206

TITLE OF SHEET
CIVIL
CANYON SERVICE LATERALS SITE PLAN (6 OF 7)
BANDELIER NATIONAL MONUMENT

DRAWING NO. 315 182751
PMIS/PKG NO. 266697
SHEET 82 OF 203

MATCHLINE (SEE SHEETS 02C202)

NEW FIRE HYDRANT, GATE VALVE AND 6" DIP LATERAL PER DETAIL 3, SHEET 02C301. SEE ALSO SHEET 02C042.

SEE SHEETS 02C034 TO 02C043 FOR WATERLINE PLAN AND PROFILE AND NATURAL GAS PLAN VIEW.

SANITARY SEWER REPLACEMENT. SEE SHEET 02C052

REPLACE FIRE HYDRANT, GATE VALVE AND 6" DIP LATERAL PER DETAIL 3, SHEET 02C301. SEE ALSO SHEET 02C042.

MATCHLINE (SEE SHEET 02C206)

CLIN OPTION B - FRIJOLES CANYON WATER AND NATURAL GAS LOOP: INCLUDES WATER AND GAS MAINS AND WATER SERVICE LATERALS. FOR DETAILS SEE SPECIFICATION 01 27 00.

KEYPLAN

CANYON SERVICE LATERALS KEYPLAN

SHEET KEYNOTES

10 0 10 20
SCALE OF FEET
1" = 10'

FULL SIZE DRAWINGS = 22"x34" 0" 1"
BAR MEASURES 1" LONG

MICAH E. JOHNSON
NEW MEXICO
25223
PROFESSIONAL ENGINEER
Digitally signed by Micah E. Johnson
Date: 2025.04.08 07:10:02 -06'00'

DESIGNED:	M. JOHNSON
CADD	E. SHERIFI
TECH. REVIEW:	D. HUANG
DATE:	04/11/2025

SUB SHEET NO. 02C207

TITLE OF SHEET
CIVIL
CANYON SERVICE LATERALS SITE PLAN (7 OF 7)
BANDELIER NATIONAL MONUMENT

DRAWING NO. 315 182751
PMIS/PKG NO. 266697
SHEET 83 OF 203

3/30/2025 9:32 PM FIGUEROA,I R24 02C200-02C207_D3167658.DWG
XG-Border_BAND
XC-LAYOUT-SHEETS
XC-LAND-PROPOSED
XC-BAND_2D-EGMaster
XC-LAYOUT-SHEETS - CANYON AREA
XC-UTILITY SITE
XC-ROADWAY
XC-BAND_Pavement and LOD Hatch

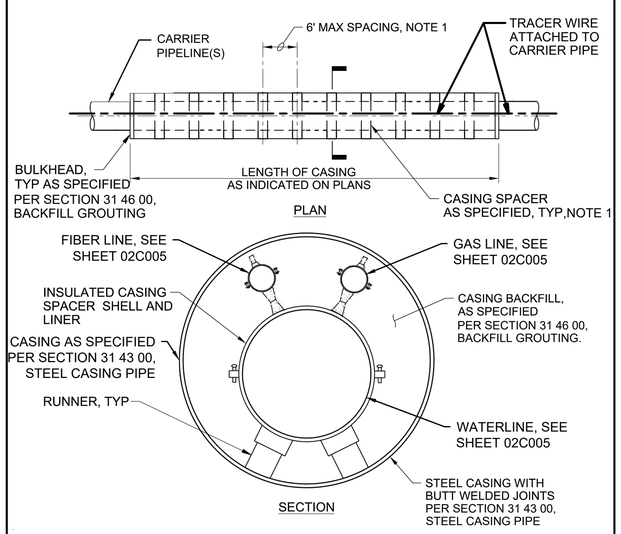

NOTES

1. THE DIMENSIONS OF CASING SPACER RISERS AND RUNNERS SHALL BE AS RECOMMENDED BY THE CASING SPACER MANUFACTURER, AS REQUIRED TO PROVIDE 2" MINIMUM CLEARANCE BETWEEN THE PIPE AND THE CASING, AND TO ALLOW INSTALLATION OF THE CARRIER PIPE AT THE ELEVATIONS SHOWN ON THE PLAN AND PROFILE SEE SECTION 31 45 00, INSTALLATION OF CARRIER PIPE IN STEEL CASING. INSTALL THE CASING AT THE ELEVATIONS CORRESPONDING TO THE CASING SPACER RISER AND RUNNER DIMENSIONS SO THAT THE CARRIER PIPE IS AT THE ELEVATIONS SHOWN ON THE PLAN AND PROFILE.

1 – CASED UNDERCROSSING
NO SCALE

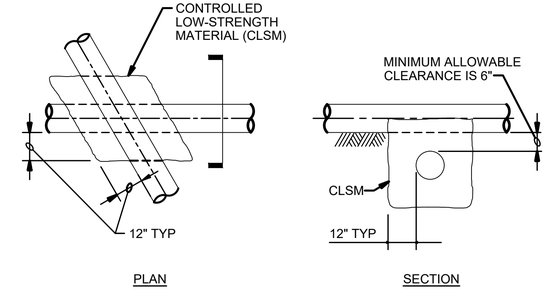

NOTES:

CLSM SUPPORT IS REQUIRED:

1. WHEN BOTH PIPELINES ARE NEW AND CLEARANCE BETWEEN THEM IS LESS THAN 12".
2. WHEN A NEW PIPELINE IS CROSSING OVER AN EXISTING PIPELINE AND THE CLEARANCE BETWEEN THEM IS LESS THAN 12".
3. AT ALL PIPE CROSSINGS WHERE A NEW PIPELINE IS CROSSING UNDER AN EXISTING PIPELINE.
4. REFER TO SPECIFICATION SECTION 31 23 23.15, TRENCH BACKFILL FOR CLSM REQUIREMENTS.
5. LENGTH OF ENCASEMENT WHERE INDICATED ON DRAWING SUPERSEED DIMENSION ON THIS DETAIL

2 – TRENCH PIPE CROSSING
NO SCALE

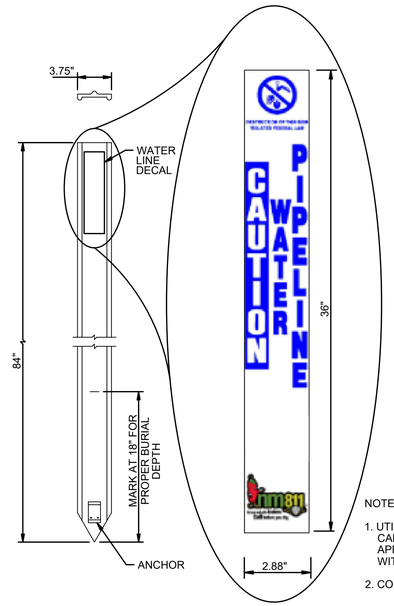

NOTES:

1. UTILITY MARKER POST SHALL BE CARSONITE MODEL CUM-375 OR APPROVED EQUIVALENT EQUIPPED WITH EMBEDMENT ANCHOR.
2. COLOR FOR UTILITY BLUE FOR WATER.

3 – PIPE MARKER POST
NO SCALE

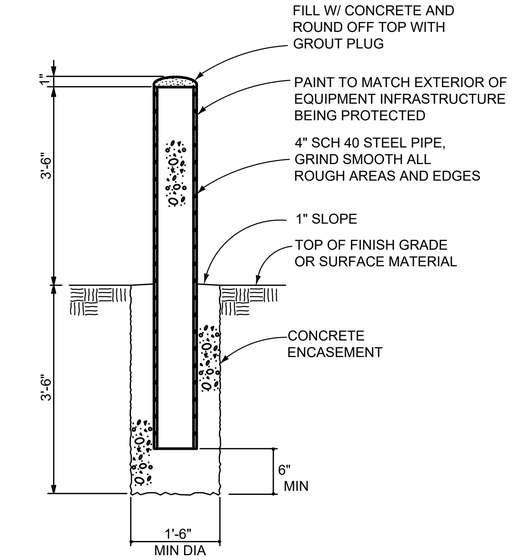

4 – BOLLARD
NO SCALE

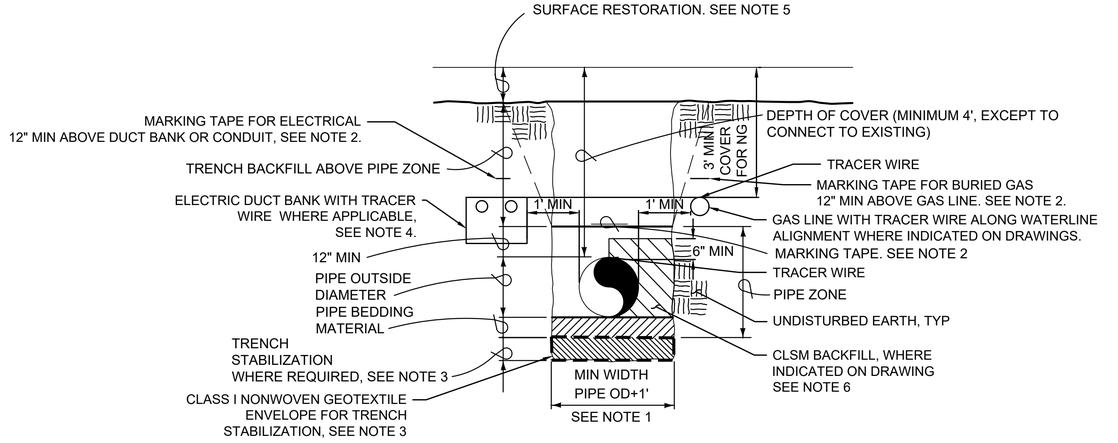

NOTES

1. SLOPE TRENCH WALLS OR SHORE EXCAVATIONS FOR CONSTRUCTION SAFETY AND IN ACCORDANCE WITH OSHA REQUIREMENTS. IN GENERAL, TRENCHES NEED TO BE NARROW DUE TO SPACE CONSTRAINTS OF TREES AND ROADS.
2. INSTALL MARKING TAPE ON TOP OF PIPE ZONE AT TRENCH CENTERLINE AS SHOWN. SEE SPECIFICATION SECTION 31 23 23.15 TRENCH BACKFILL FOR MARKING TAPE DETAILS.
3. USE OVER EXCAVATION AND FOUNDATION STABILIZATION MATERIAL WHEN ORDERED BY CONTRACTING OFFICER WHEN UNSUITABLE, UNEXPECTED TRENCH CONDITIONS ARE FOUND DURING CONSTRUCTION.
4. LOCATION OF ELECTRIC AND FIBER. SEE ELECTRICAL DRAWINGS FOR LOCATION OF ELECTRIC AND FIBER CONDUITS AND DUCT BANKS. SUPPORT EXISTING UTILITIES NEAR TRENCH AND AT CROSSINGS, AS SHOWN ON DRAWINGS.
5. SEE SHEETS 04C301 - 04C303 DETAIL B FOR PAVEMENT RESTORATION DETAILS.
6. INSTALL CLSM BACKFILL WHERE INDICATED ON DRAWINGS. SAND BAG SUPPORT WHERE CLSM IS USED. PIPE BEDDING OTHERWISE. SEE DETAIL 2, SHEET 02C300 FOR EXISTING UTILITY CROSSINGS.

5 – TYPICAL TRENCH
NO SCALE

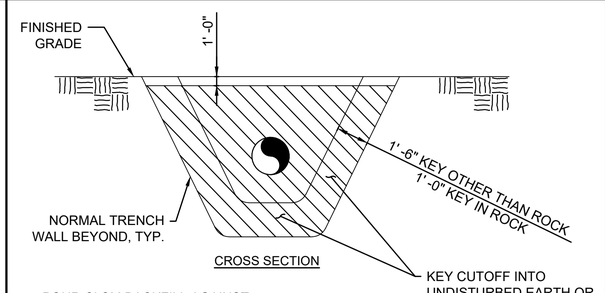

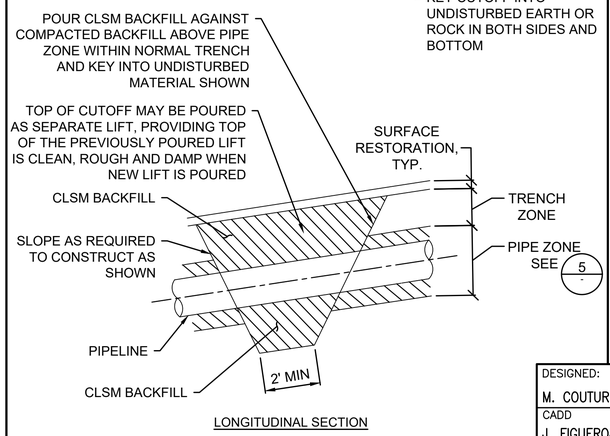

6 – TRENCH PLUG
NO SCALE

MICAH E. JOHNSON
NEW MEXICO
25223
Digitally signed by Micah E. Johnson
Date: 2025.04.10 16:18:54-06'00'
PROFESSIONAL ENGINEER

ROBERT W. MARTIN
NEW MEXICO
26748
Digitally signed by Robert W. Martin
Date: 2025.04.10 12:55:05-05'00'
PROFESSIONAL ENGINEER

DESIGNED: M. COUTURE	SUB SHEET NO.	TITLE OF SHEET: CIVIL	DRAWING NO. 315 182751
CADD J. FIGUEROA	02C300	CIVIL DETAILS	PMIS/PKG NO. 266697
TECH. REVIEW: D. HUANG		BANDELIER NATIONAL MONUMENT	SHEET 84 OF 203
DATE: 04/11/2025			

3/30/2025 7:01 PM FIGUEROAJ R24 02C300_D3167650_DETAILS.DWG XG-Border_BAND

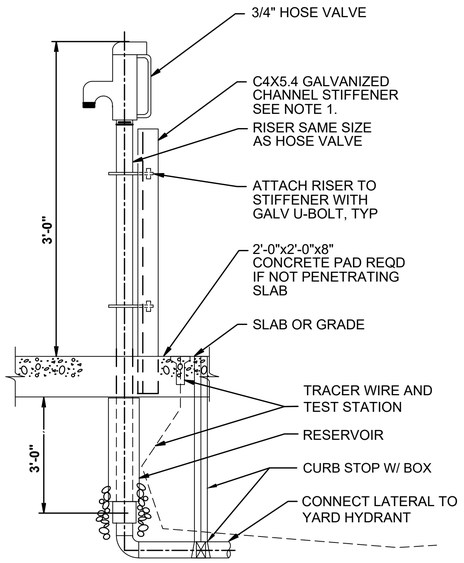

NOTES:

1. CHANNEL STIFFENER AND RISER ATTACHMENT HARDWARE SHALL BE GALVANIZED STEEL.
2. REMOVE AND DISPOSE EXISTING YARD HYDRANT. PROVIDE NEW YARD HYDRANT AT APPROXIMATELY THE SAME LOCATION.

1 – YARD HYDRANT

NO SCALE

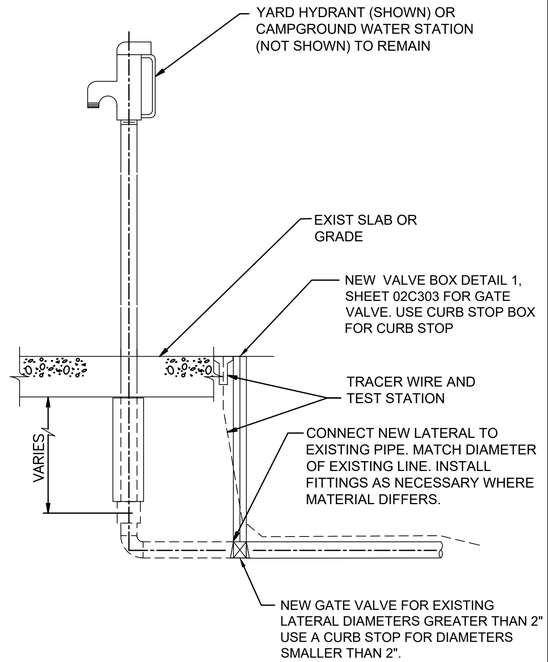

2 – RECONNECT EXISTING YARD HYDRANT

NO SCALE

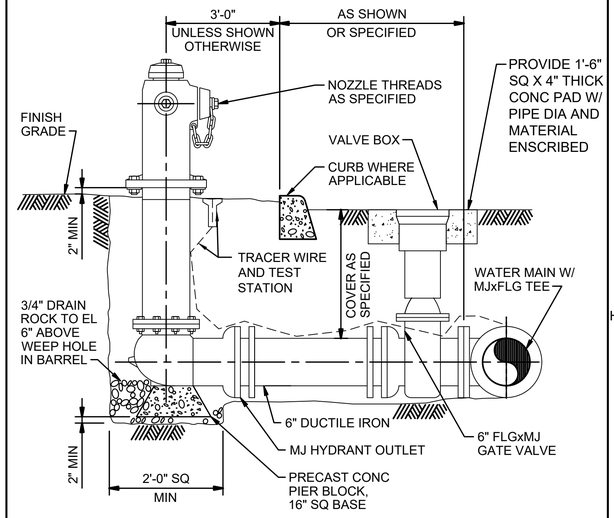

NOTE:

1. ALL JOINTS TO BE RESTRAINED.
2. ONLY ONE FIRE HYDRANT TO BE PUT OUT OF SERVICE AT TIME.

3 – FIRE HYDRANT

NO SCALE

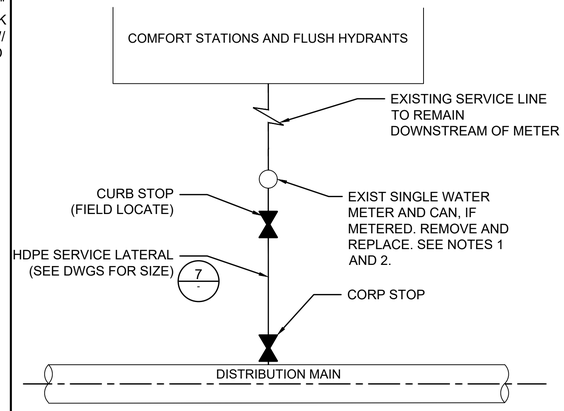

NOTES:

1. REMOVE AND REPLACE WATER METER AND CAN FOR JUNIPER CAMPGROUND COMFORT STATIONS. DOCUMENT SIZE AND MATERIAL OF EXIST SERVICE LINE DOWNSTREAM OF WATER METERS, SEE SECTION 33 12 13, WATER SERVICE CONNECTIONS.
2. FLUSH HYDRANTS DO NOT REQUIRE METERING.

4 – SINGLE WATER LATERAL WITHOUT SPRINKLER EXTENSION

NO SCALE

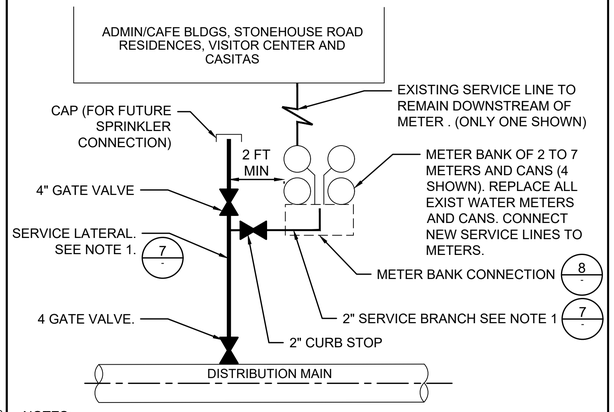

NOTES:

1. REFER TO TABLE BELOW FOR SERVICE LATERAL, SERVICE BRANCH, AND VALVE SIZE SPECIFICS FOR METER BANKS.

METER BANK	NO. METERS	LATERAL	LATERAL VALVE	BRANCH	CURB STOP	CAP
#1	6 - 7	4"	GATE	2"	2"	4"
#2	4	4"	GATE	2"	2"	4"
#3, #4, #8	6 (EACH)	4"	GATE	2"	2"	4"
#5, #6, #7	2 (EACH)	4"	GATE	2"	2"	4"

2. EXISTING METER BANK SHOWN FOR REFERENCE ONLY. HAND EXCAVATE METER BANK AREA TO EXPOSE ALL LATERALS AND AS-BUILT CONFIGURATION. DOCUMENT SIZE AND MATERIAL OF EXIST SERVICE LINE DOWNSTREAM OF WATER METERS, SEE SECTION 33 12 13, WATER SERVICE CONNECTIONS.

5 – MULTIPLE WATER LATERALS WITH SPRINKLER EXTENSION

NO SCALE

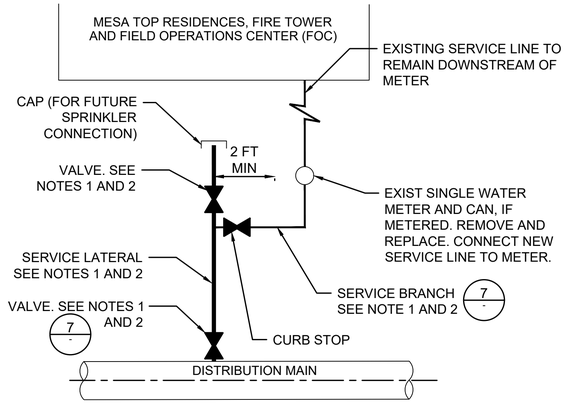

NOTES:

1. SERVICE LATERAL TO FOC TO BE 4" DIA WITH 4" GATE VALVES WITH BOX. BRANCH FROM 4" LATERAL TO METER CAN TO BE 2" WITH 2" CURB STOP.
2. SERVICE LATERAL TO RESIDENCES AND FIRE TOWER TO BE 2" DIA WITH 2" CORP STOP AT CONNECTION TO WATER MAIN AND 2" CURB VALVE WITH BOX NEAR END CAP. BRANCH FROM 2" LATERAL TO METER CAN TO BE 2" WITH 2" CURB STOP.
3. DOCUMENT SIZE AND MATERIAL OF EXIST SERVICE LINE DOWNSTREAM OF WATER METERS, SEE SECTION 33 12 13, WATER SERVICE CONNECTIONS.

6 – SINGLE WATER LATERAL WITH SPRINKLER EXTENSION

NO SCALE

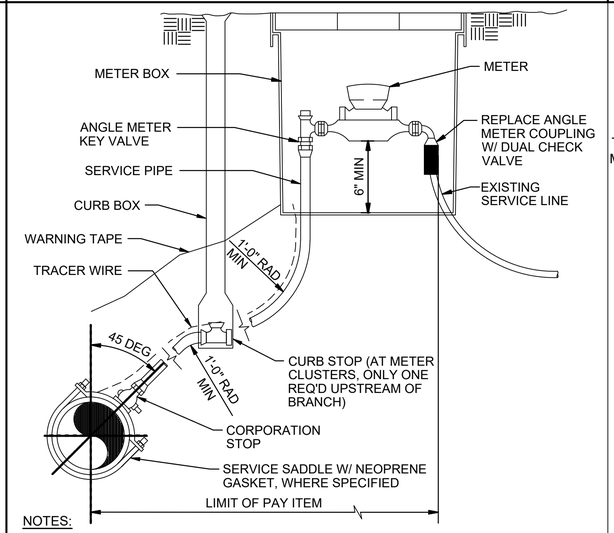

NOTES:

1. REMOVE AND REPLACE EXISTING WATER METER, METER SETTER, VALVES AND METER CAN.
2. ABANDON EXISTING WATER SERVICE LINE BETWEEN DISTRIBUTION WATERLINE AND EXISTING METER.
3. EXIST SERVICE LINE FROM REPLACED METER AND CAN TO BUILDINGS TO BE REPLACED BY OTHERS (NOT IN THIS CONTRACT)

7 – WATER SERVICE W/ EXIST METER

NO SCALE

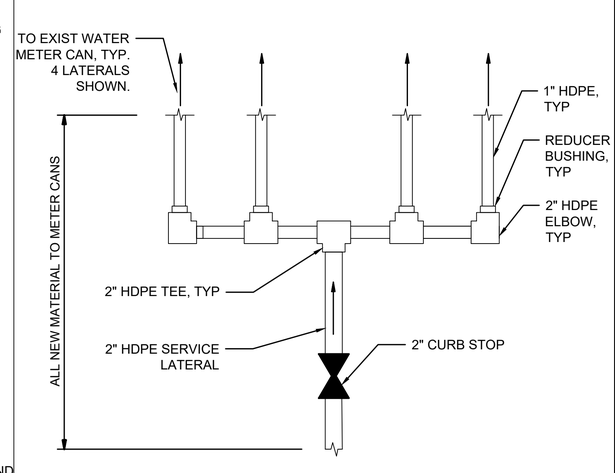

8 – EXISTING METER BANK CONNECTION

NO SCALE

MICAH E. JOHNSON NEW MEXICO 25223 Digitally signed by Micah E. Johnson Date: 2025.04.08 17:11:10-06'00' PROFESSIONAL ENGINEER

DESIGNED:	M. COUTURE
CADD	J. FIGUEROA
TECH. REVIEW:	D. HUANG
DATE:	04/11/2025

SUB SHEET NO. 02C301

TITLE OF SHEET: CIVIL

CIVIL DETAILS

BANDELIER NATIONAL MONUMENT

DRAWING NO. 315 182751

PMIS/PKG NO. 266697

SHEET 85 OF 203

3/31/2025 2:38 PM FIGUEROAJ R24 02C301 D3167658_DETAILS.DWG XG-Border BAND

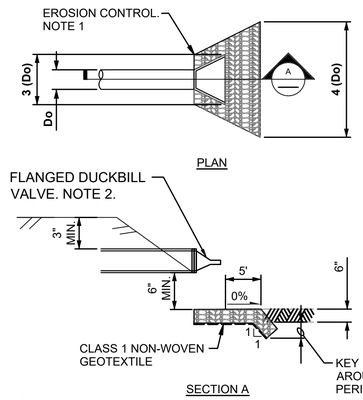

NOTES:

1. EXTEND EROSION CONTROL CLASS I RIPRAP (BROWN COLOR FAMILY) TO FLOWLINE OF BLUE TANK OVERFLOW PIPE.
2. INSTALL FLANGED DUCKBILL VALVE AT OUTLET WITH #24 MESH SS SCREEN INSTALLED WITHIN DUCKBILL FLANGE.

1 / – BLUE TANK OVERFLOW OUTLET

NO SCALE

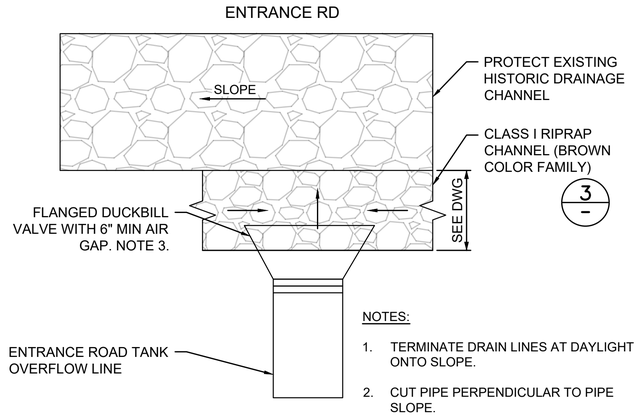

NOTES:

1. TERMINATE DRAIN LINES AT DAYLIGHT ONTO SLOPE.
2. CUT PIPE PERPENDICULAR TO PIPE SLOPE.
3. INSTALL FLANGED DUCKBILL VALVE AT OUTLET WITH #24 MESH SS SCREEN INSTALLED WITHIN DUCKBILL FLANGE. INVERT OF DUCKBILL VALVE TO HAVE 6" MIN AIR GAP ABOVE FINAL GRADE. SEE ALSO DETAIL 1, THIS SHEET, SECTION A.

2 / – ENTRANCE RD TANK OVERFLOW OUTLET

NO SCALE

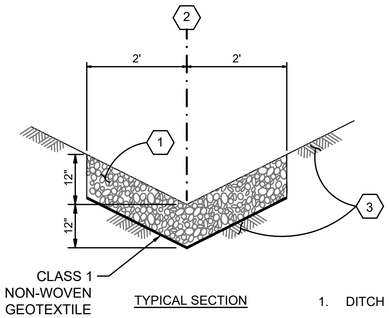

1. DITCH PROTECTION CLASS I RIPRAP
2. ℄ OF DITCH
3. PREPARED SUBGRADE

3 / – ENTRANCE RD TANK AND MECHANICAL BUILDING RIPRAP CHANNELS

NO SCALE

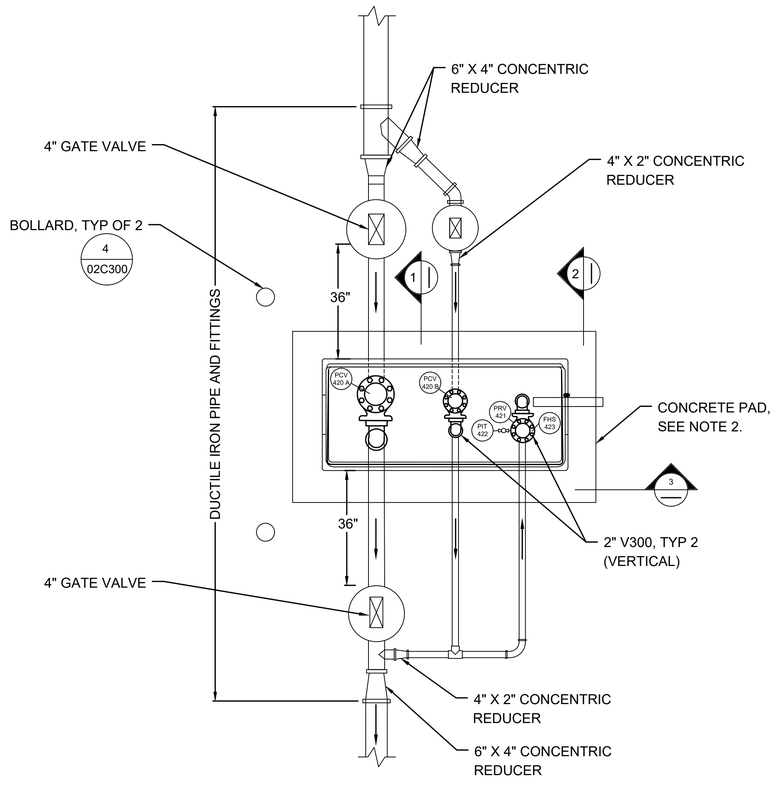

PLAN VIEW

4 / – PRV DETAIL

NO SCALE

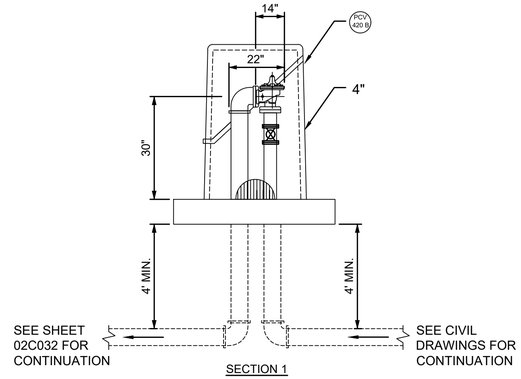

SECTION 1

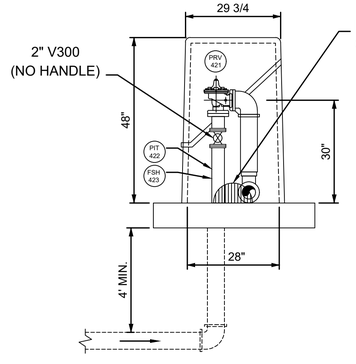

SECTION 2

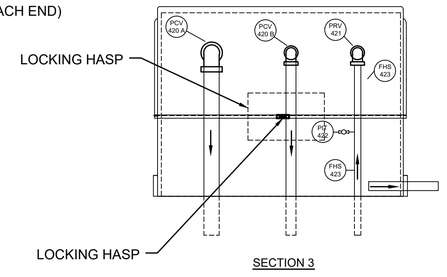

SECTION 3

NOTES:

1. REFER TO SECTION 33 05 01, CONVEYANCE PIPING - GENERAL, FOR PRV ENCLOSURE.
2. CONCRETE PAD, SEE DETAIL 0330-056, TYPE B ON SHEET 15S505.
3. VALVES OUTSIDE OF ENCLOSURE SEE SECTION 33 12 16, WATER UTILITY DISTRIBUTION VALVES. VALVES INSIDE OF ENCLOSURE SEE SECTION 40 27 02, PROCESS VALVES AND OPERATORS.
4. HEAT TO BE PROVIDED BY (1) 1000 WATT, 120V SINGLE PHASE HEATER.
5. FOUR INTERNAL BRACKETS AND CONCRETE ANCHORS TO BE SUPPLIED WITH THE ENCLOSURE (NOT SHOWN).
6. STANDARD COLOR BEIGE FOR ENCLOSURE.

MICAH E. JOHNSON NEW MEXICO 25223 Digitally signed by Micah E. Johnson Date: 2025.04.08 17:11:46-06'00' PROFESSIONAL ENGINEER

DESIGNED: M. COUTURE	SUB SHEET NO. 02C302	TITLE OF SHEET CIVIL CIVIL DETAILS (3 OF 6) BANDELIER NATIONAL MONUMENT	DRAWING NO. 315 182751
CADD J. FIGUEROA			PMIS/PKG NO. 266697
TECH. REVIEW: D. HUANG			SHEET 86 OF 203
DATE: 04/11/2025			

3/30/2025 9:42 PM FIGUEROAJ R24 02C302_D3167658_DETAILS.DWG XG-Border_BAND

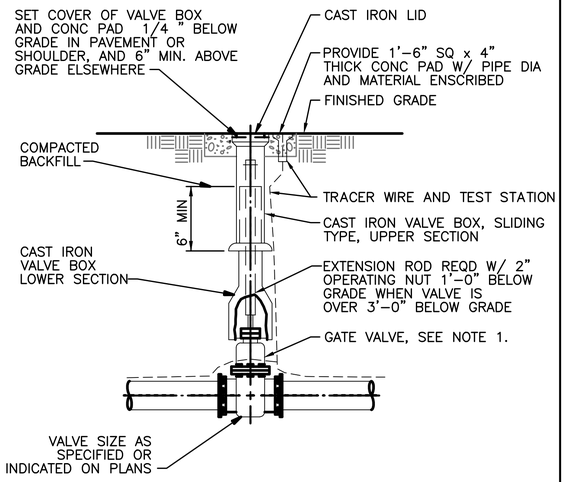

NOTES:

1. WRAP PIPE, VALVE AND VALVE BOX WITH 8 MIL PLASTIC TO PREVENT SILTING IN OF VALVE BOX.

1 / – BURIED GATE VALVE BOX
NO SCALE

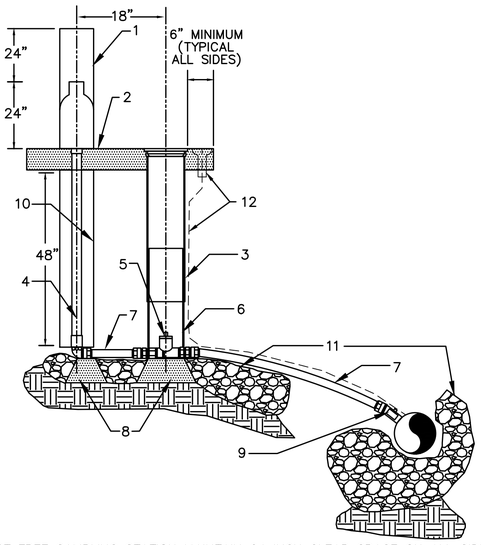

NOTES:

1. FROST FREE SAMPLING STATION MAINTAIN 24 INCH CLEAR SPACE ON ALL SIDES
2. PROVIDE FOR INCH THICK CONCRETE PAD CENTERED AROUND THE VALVE BOX AND SAMPLING STATION IF OUTSIDE OF PAVED AREAS. PAD SHALL EXTEND A MINIMUM OF 6" BEYOND ALL SIDES OF VALVE BOX AND SAMPLING STATION
3. VALVE BOX ASSEMBLY
4. ¾" IN STAINLESS STEEL
5. BALL BALE CURBSTOP
6. 24" BOTTOM SHALL BE DOGHOUSED OVER CURBSTOP
7. ¾" HDPE
8. 8"X8" CONCRETE PIER BLOCK ON UNDISTURBED NATIVE SOIL
9. CORPORATION STOP
10. 6" CURBSTOP BOX
11. BACKFILL
12. TRACER WIRE AND TEST STATION

2 / – WATER QUALITY SAMPLING STATION
NO SCALE

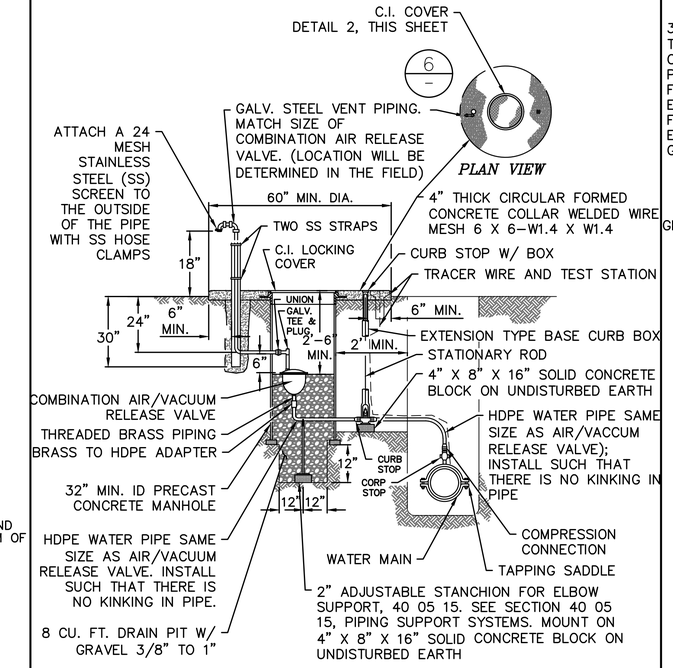

3 / – COMBINATION AIR/VACUUM RELEASE VALVE
NO SCALE

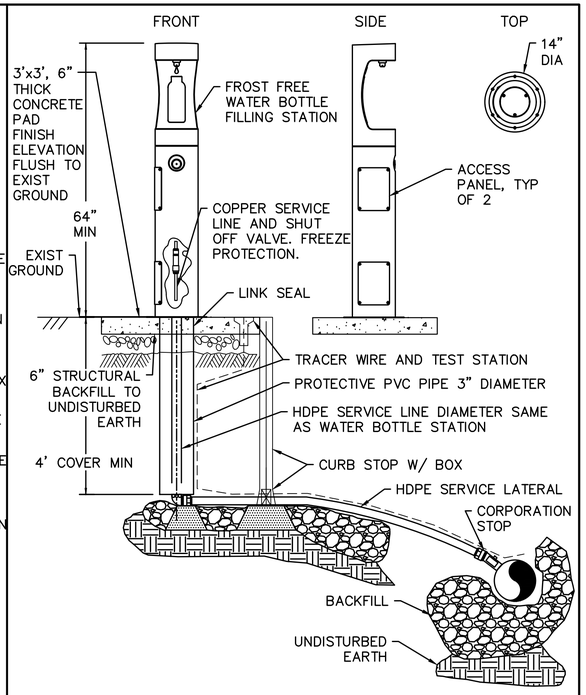

4 / – OUTDOOR WATER BOTTLE FILLING STATION
NO SCALE

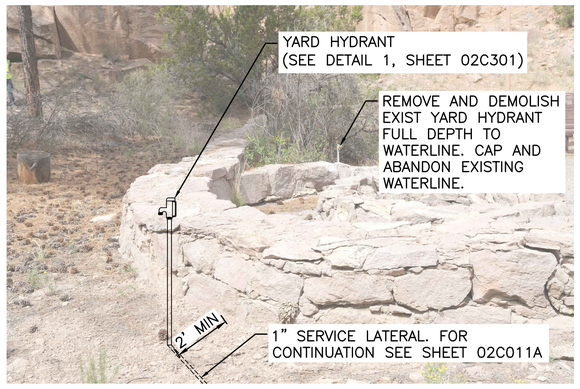

5 / – AMPHITHEATER – FIRE RING YARD HYDRANT
NO SCALE

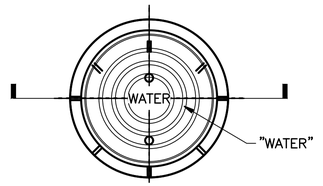

SOLID COVER

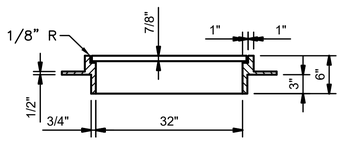

SECTION

6 / – WATER MANHOLE FRAME AND COVER
NO SCALE

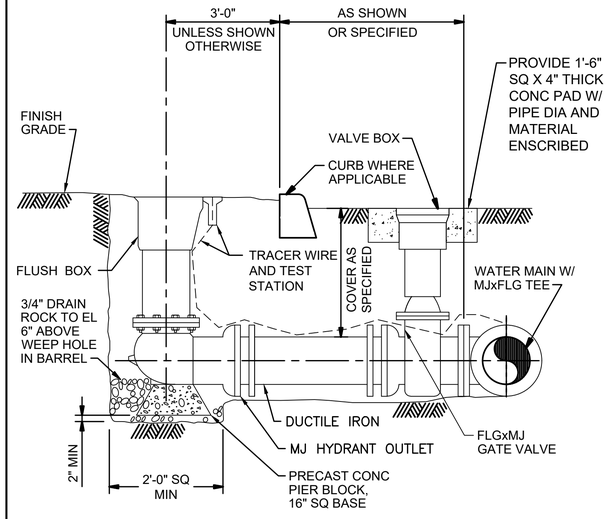

NOTE:

1. ALL JOINTS TO BE RESTRAINED.

7 / – FLUSH HYDRANT
NO SCALE

MICAH E. JOHNSON
NEW MEXICO
25223
Digitally signed by Micah E. Johnson
Date: 2025.04.08 17:12:25-06'00'
PROFESSIONAL ENGINEER

DESIGNED:	M. COUTURE
CADD	J. FIGUEROA
TECH. REVIEW:	D. HUANG
DATE:	04/11/2025

SUB SHEET NO. 02C303

TITLE OF SHEET
CIVIL
CIVIL DETAILS
BANDELIER NATIONAL MONUMENT

DRAWING NO. 315 182751
PMIS/PKG NO. 266697
SHEET 87 OF 203

3/30/2025 9:45 PM FIGUEROAJ R24 02C303_D3167658_DETAILS.DWG XG-Border_BAND

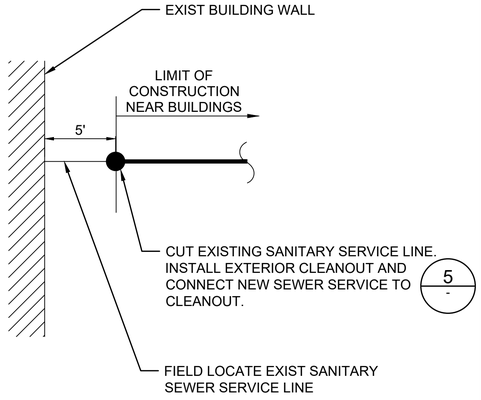

1 SEWER SERVICE CONNECTION

NO SCALE

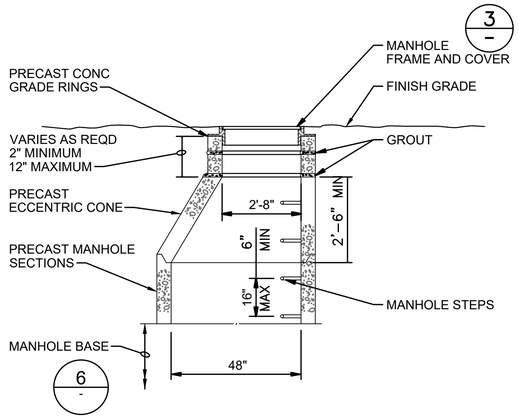

2 ECCENTRIC MANHOLE TOP SECTION

NO SCALE

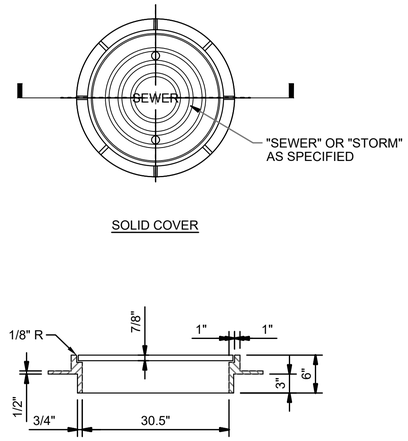

3 SEWER MANHOLE FRAME AND COVER

NO SCALE

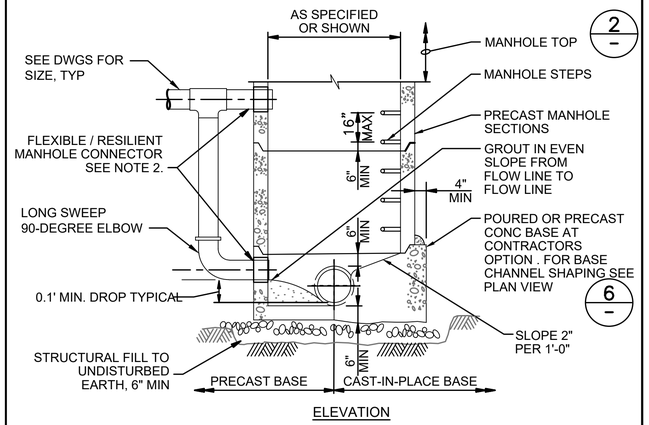

NOTES:

1. SEE SPECIFICATION 33 05 13 MANHOLES.
2. FLEXIBLE MANHOLE CONNECTOR IS APPLICABLE FOR CONNECTION OF REPLACEMENT PIPE TO EXISTING MANHOLE. RESILIENT CONNECTOR IS APPLICABLE FOR NEW MANHOLES.
3. MANHOLE TO HAVE CRC SYSTEM NO. 2 AND MOISTURE VAPOR BARRIER PER SPECIFICATION SECTION 33 05 13, MANHOLES.
4. INSTALL BUTYL SEALANT BETWEEN MANHOLE BARREL SECTIONS, BETWEEN CONCRETE RISERS AND FRAME. REFER TO SPECIFICATION SECTION 33 05 13, MANHOLES

4 SEWER DROP MANHOLE

NO SCALE

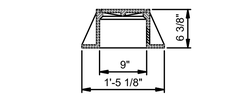

CLEANOUT FRAME AND COVER

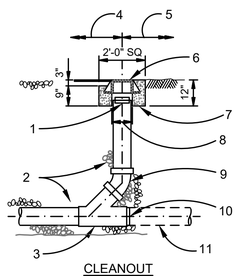

CLEANOUT

NOTES:

1. WATERTIGHT PIPE PLUG
2. PROVIDE PIPE BEDDING MATERIAL FOR A MINIMUM OF 8" AROUND CLEANOUT WYE
3. WYE
4. ASPHALT CONCRETE
5. OTHER AREAS
6. CLEANOUT FRAME AND COVER
7. CONCRETE COLLAR
8. PIPE OD + 1"
9. 45° BEND
10. PLUG OR ADAPTER TO SERVICE CONN PIPE AS REQUIRED
11. SERVICE CONN PIPE, IF REQUIRED

NOTE:

1. WHERE EXISTING CLEANOUTS ARE NOT REPLACED BY THIS PROJECT, CONNECT NEW SANITARY LATERALS TO DOWNSTREAM END OF EXISTING WYE FITTING.

5 EXTERIOR CLEANOUT

NO SCALE

NOTES:

1. INVERT OF CHANNEL CONSTRUCTED TO UNIFORM FLOW LINES WITH GRADUAL TRANSITION SECTIONS.
2. SLOPE 2" PER FOOT, TYP.
3. SEE ELEVATION VIEW.
4. SEE SPECIFICATION 33 05 13 MANHOLES.
5. FLEXIBLE MANHOLE CONNECTOR IS APPLICABLE FOR CONNECTION OF REPLACEMENT PIPE TO EXISTING MANHOLE. RESILIENT CONNECTOR IS APPLICABLE FOR NEW MANHOLES.
6. MANHOLE TO HAVE CRC SYSTEM NO. 2 AND MOISTURE VAPOR BARRIER PER SPECIFICATION SECTION 33 05 13, MANHOLES.
7. INSTALL BUTYL SEALANT BETWEEN MANHOLE BARREL SECTIONS, BETWEEN CONCRETE RISERS AND FRAME. REFER TO SPECIFICATION SECTION 33 05 13, MANHOLES.

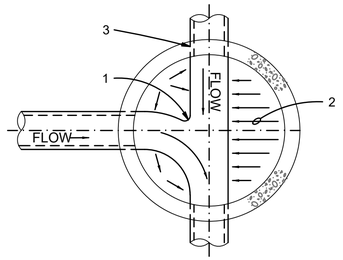

BASE CHANNEL INVERT SHAPING

PLAN

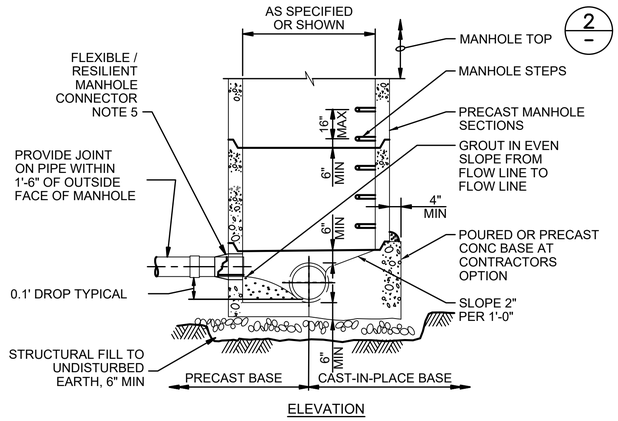

ELEVATION

6 MANHOLE BASE SECTION

NO SCALE

NOTES:

1. CORE DRILL HOLE IN SEWER MAIN FOR SADDLE DIMENSIONS.
2. APPLY 2 BEADS OF SILICONE CAULK TO UNDERSIDE OF SADDLE AROUND OPENING.
3. SADDLE WYE FITTING. SEE SECTION 33 05 01.12, GRAVITY SEWER PIPE AND FITTINGS.

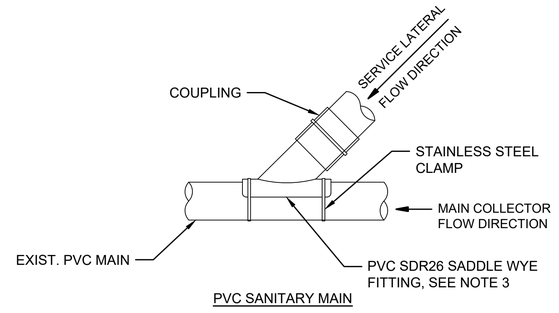

PVC SANITARY MAIN

7 SADDLE WYE CONNECTION DETAIL

MICAH E. JOHNSON NEW MEXICO 25223 PROFESSIONAL ENGINEER
Digitally signed by Micah E. Johnson
Date: 2025.04.08 12:13:03-06'00'

DESIGNED: M. COUTURE	SUB SHEET NO. 02C304	TITLE OF SHEET: CIVIL — CIVIL DETAILS (5 OF 6) — BANDELIER NATIONAL MONUMENT	DRAWING NO. 315 182751
CADD J. FIGUEROA			PMIS/PKG NO. 266697
TECH. REVIEW: D. HUANG			SHEET 88 OF 203
DATE: 04/11/2025			

3/30/2025 9:47 PM FIGUEROAJ R24 02C304_D3167656_DETAILS.DWG XG-Border_BAND 09F

NOT USED

3/30/2025 9:49 PM FIGUEROAJ R24 02C305_D3167658_DETAILS.DWG XG-Border_BAND

MICAH E. JOHNSON
NEW MEXICO
25223
Digitally signed by Micah E. Johnson
Date: 2025.04.09 12:13:38-06'00'
PROFESSIONAL ENGINEER

DESIGNED: M. COUTURE CADD J. FIGUEROA TECH. REVIEW: D. HUANG DATE: 04/11/2025	SUB SHEET NO. 02C305	TITLE OF SHEET CIVIL CIVIL DETAILS BANDELIER NATIONAL MONUMENT	DRAWING NO. 315 182751 PMIS/PKG NO. 266697 SHEET 89 OF 203

GENERAL NOTES:

1. COORDINATE FINAL LOCATION WITH NPS AND CONTRACTING OFFICER
2. MINIMUM CLEARANCE BETWEEN EDGE OF CONCRETE PAD & OUTSIDE EDGE OF GAS METER SHALL BE 6" ON ALL SIDES.
3. LOCATE REGULATOR/METER ASSEMBLY MIN. 6 FT FROM ANY BUILDING OPENING FOR NEW INSTALLATIONS.

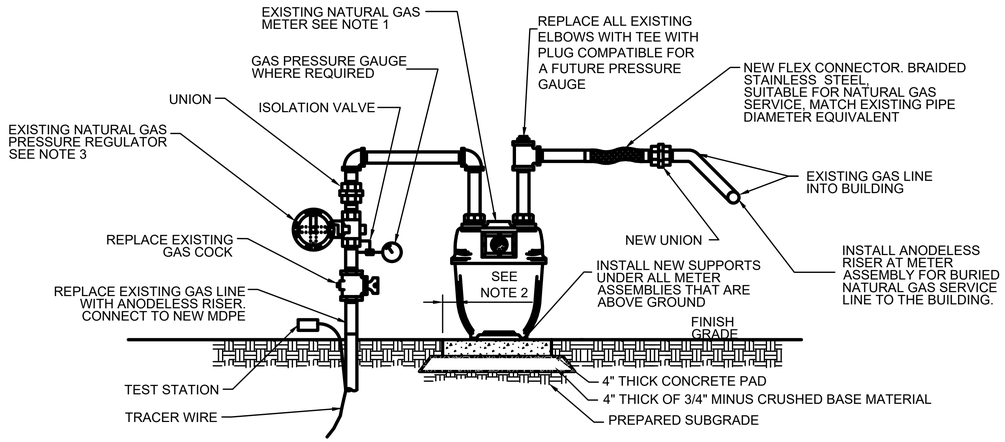

1 – GAS REGULATOR AND GAS METER
NO SCALE

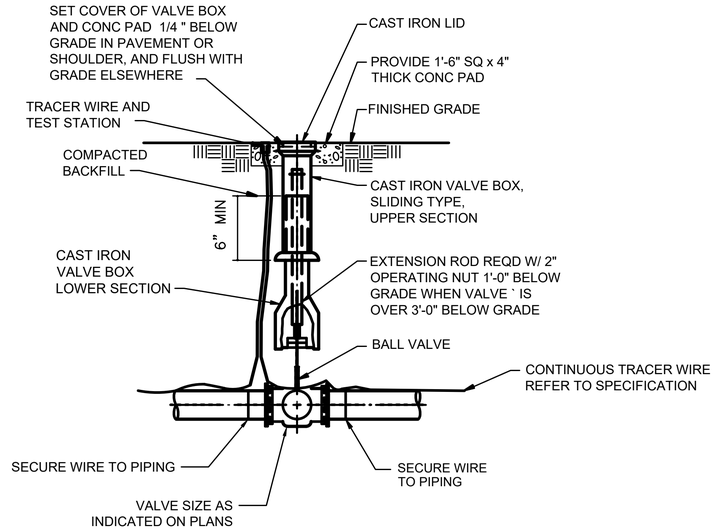

2 – GAS BALL VALVE
NO SCALE

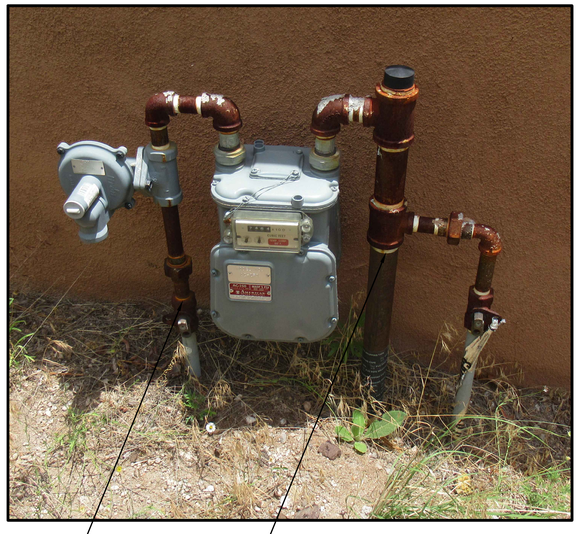

DISCONNECT 2-INCH LATERAL, INSTALL PIPE PLUG, AND REMOVAL ABOVE GROUND PORTION OF LATERAL DOWN 2-FEET BELOW GRADE.

LIMIT OF CONSTRUCTION. REPLACE EXISTING PLUG VALVE AND INSTALL ANODELEES RISER TO THIS POINT.

3 – BUILDING #2 SERVICE CONNECTION
NO SCALE

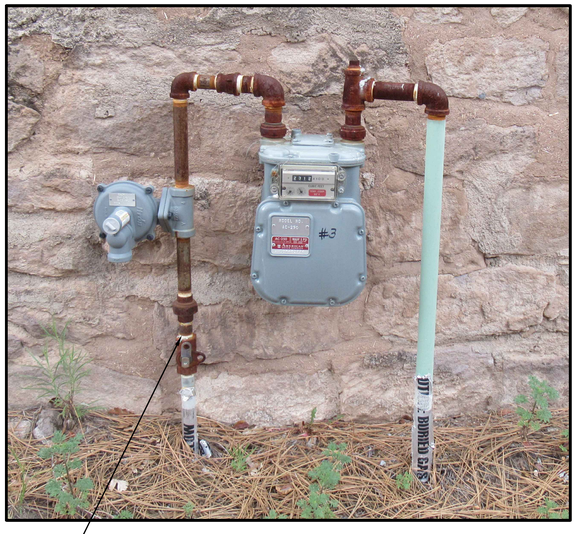

LIMIT OF CONSTRUCTION. REPLACE EXISTING PLUG VALVE AND INSTALL ANODELEES RISER TO THIS POINT.

4 – BUILDING #3 SERVICE CONNECTION
NO SCALE

LIMIT OF CONSTRUCTION. REPLACE EXISTING PLUG VALVE AND INSTALL ANODELEES RISER TO THIS POINT.

5 – BUILDING #4 SERVICE CONNECTION
NO SCALE

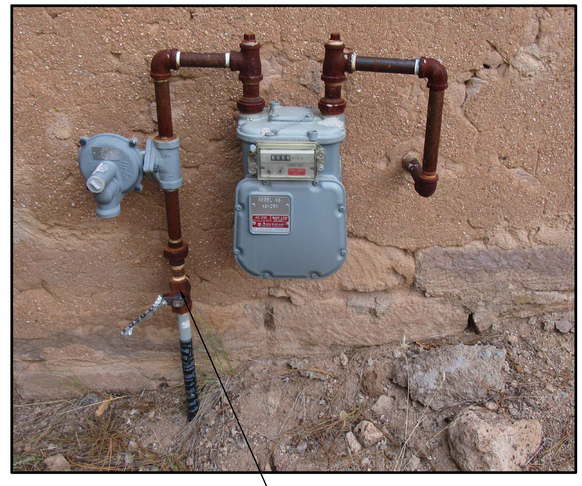

LIMIT OF CONSTRUCTION. REPLACE EXISTING PLUG VALVE AND INSTALL ANODELEES RISER TO THIS POINT.

6 – BUILDING #5 SERVICE CONNECTION
NO SCALE

MICAH E. JOHNSON
NEW MEXICO
25223
Digitally signed by Micah E. Johnson
Date: 2025.04.08 14:27:06 MDT
PROFESSIONAL ENGINEER

DESIGNED:	D. STIEB
CADD	E. SHERIFI
TECH. REVIEW:	T. PRICE
DATE:	04/11/2025

SUB SHEET NO. 02C501

TITLE OF SHEET
CIVIL
NATURAL GAS DETAILS (1 OF 7)
BANDELIER NATIONAL MONUMENT

DRAWING NO. 315 182751
PMIS/PKG NO. 266697
SHEET 90 OF 203

3/30/2025 8:34 PM FIGUEROAJ R24 02C501 D3167658_DETAILS.DWG XG-Border_BAND

1 – BUILDING #8 SERVICE CONNECTION
NO SCALE

2 – BUILDING #7 AND #8 SERVICE LATERAL ROUTING
NO SCALE

3 – BUILDING #7 SERVICE CONNECTION
NO SCALE

4 – BUILDING #7 AND #8 SERVICE LATERAL ROUTING
NO SCALE

5 – BUILDING #9 SERVICE CONNECTION
NO SCALE

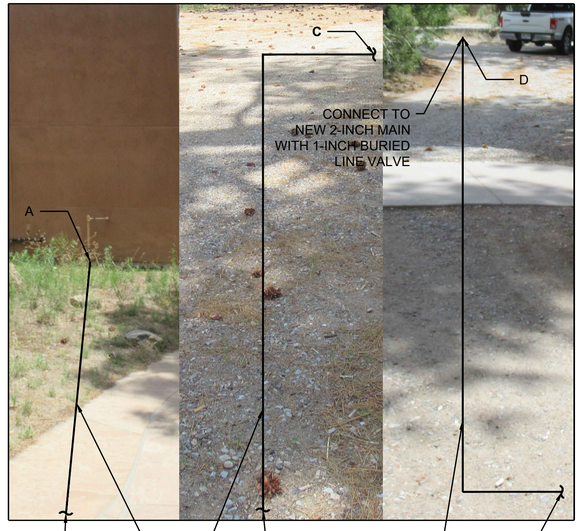

6 – BUILDING #9 SERVICE LATERAL ROUTING
NO SCALE

7 – BUILDING #10 SERVICE CONNECTION
NO SCALE

8 – BUILDING #10 SERVICE LATERAL ROUTING
NO SCALE

MICAH E. JOHNSON
NEW MEXICO
25223
Digitally signed by Micah E. Johnson
Date: 2025.04.08 17:15:13-06'00'
PROFESSIONAL ENGINEER

DESIGNED:	D. STIEB
CADD	E. SHERIFI
TECH. REVIEW:	T. PRICE
DATE:	04/11/2025

SUB SHEET NO. 02C502

TITLE OF SHEET
CIVIL
NATURAL GAS DETAILS (2 OF 7)
BANDELIER NATIONAL MONUMENT

DRAWING NO. 315 182751
PMIS/PKG NO. 266697
SHEET 91 OF 203

3/30/2025 8:45 PM FIGUEROAJ R24 02C502_03167658_DETAILS.DWG XG-Border_BAND

1 – BUILDING #11 SERVICE CONNECTION
NO SCALE

2 – BUILDING #11 SERVICE LATERAL ROUTING
NO SCALE

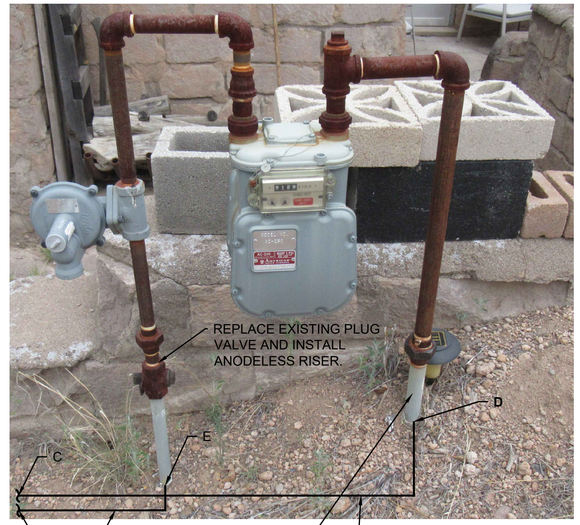

3 – BUILDING #11 SERVICE LATERAL CONNECTION AND SERVICE LATERAL ROUTING
NO SCALE

4 – BUILDING #11 SERVICE LATERAL ROUTING
NO SCALE

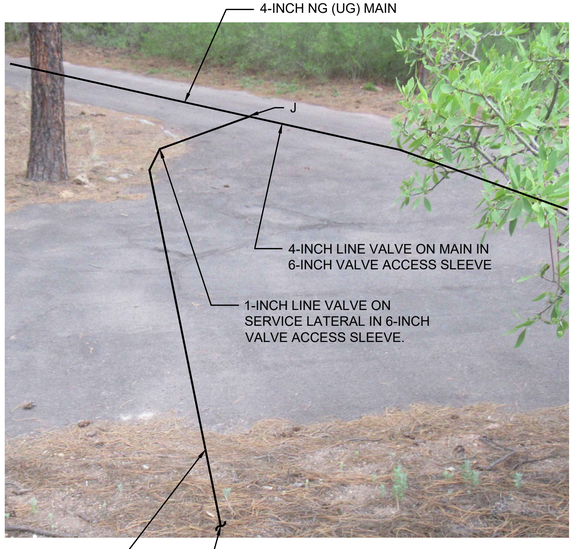

5 – BUILDING #11 SERVICE LATERAL ROUTING
NO SCALE

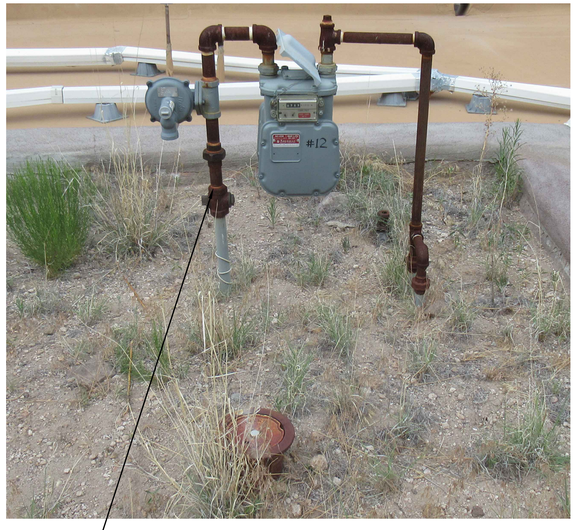

6 – BUILDING #12 SERVICE CONNECTION
NO SCALE

7 – BUILDING #13 SERVICE CONNECTION
NO SCALE

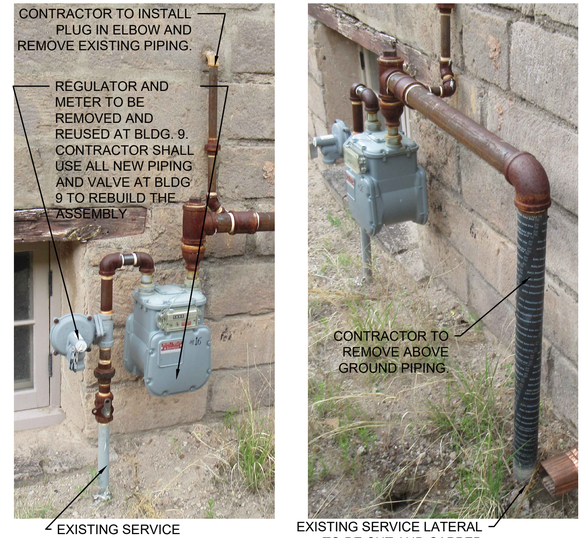

8 – BUILDING #16 SERVICE CONNECTION
NO SCALE

MICAH E. JOHNSON
NEW MEXICO
25223
Digitally signed by Micah E. Johnson
Date: 2025.04.08 14:15:52-06'00'
PROFESSIONAL ENGINEER

DESIGNED:	D. STIEB
CADD	E. SHERIFI
TECH. REVIEW:	T. PRICE
DATE:	04/11/2025

SUB SHEET NO. 02C503

TITLE OF SHEET
CIVIL
NATURAL GAS DETAILS (3 OF 7)
BANDELIER NATIONAL MONUMENT

DRAWING NO. 315 182751
PMIS/PKG NO. 266697
SHEET 92 OF 203

3/30/2025 8:55 PM FIGUEROAJ R24 02C503_D3167658_DETAILS.DWG XG-Border_BAND

1 – BUILDING #17 SERVICE CONNECTION
NO SCALE

2 – BUILDING #17 AND #18 SERVICE LATERAL ROUTING
NO SCALE

3 – BUILDING #17 AND #18 SERVICE LATERAL ROUTING
NO SCALE

4 – BUILDING #18 SERVICE CONNECTION
NO SCALE

5 – BUILDING #19A SERVICE CONNECTION
NO SCALE

6 – BUILDING #19A SERVICE LATERAL ROUTING
NO SCALE

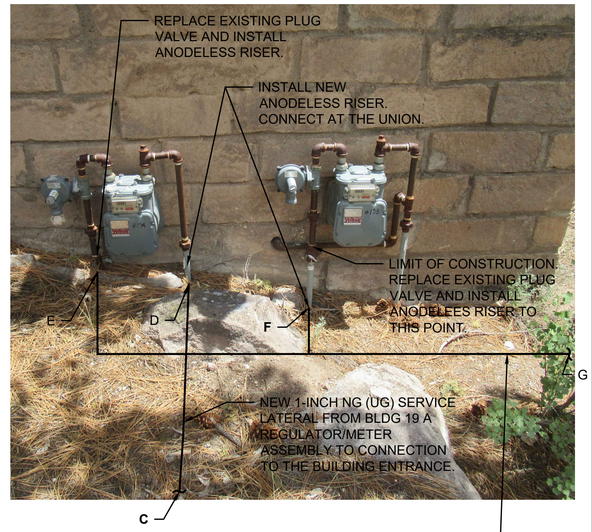

7 – BUILDING #19 A AND B SERVICE CONNECTION
NO SCALE

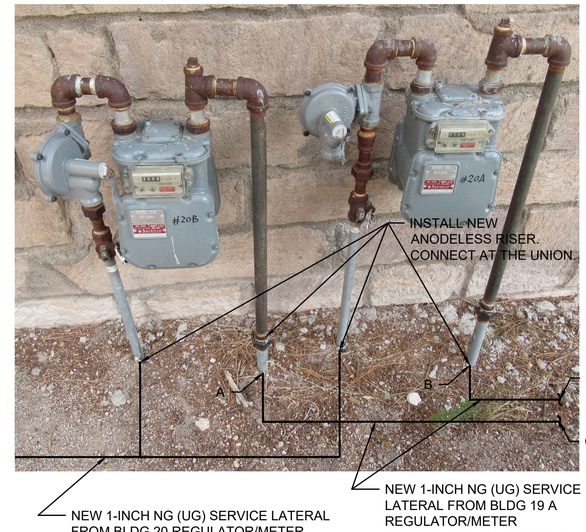

8 – BUILDING #20 A AND B SERVICE CONNECTION
NO SCALE

MICAH E. JOHNSON NEW MEXICO 25223 Digitally signed by Micah E. Johnson Date: 2025.04.08 15:16:40-06'00' PROFESSIONAL ENGINEER

DESIGNED:	D. STIEB
CADD	E. SHERIFI
TECH. REVIEW:	T. PRICE
DATE:	04/11/2025

SUB SHEET NO. 02C504

TITLE OF SHEET
CIVIL
NATURAL GAS DETAILS (4 OF 7)
BANDELIER NATIONAL MONUMENT

DRAWING NO. 315 182751
PMIS/PKG NO. 266697
SHEET 93 OF 203

3/30/2025 9:06 PM FIGUEROAJ R24 02C504_03167658_DETAILS.DWG XG-Border_BAND

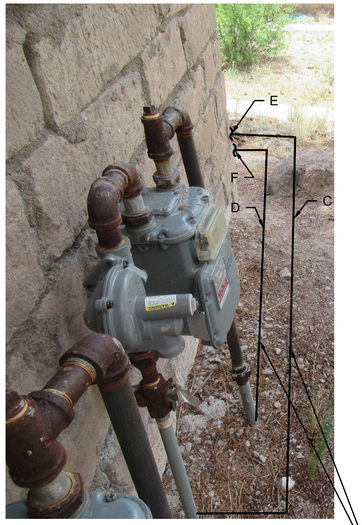

NEW 1-INCH NG (UG) SERVICE LATERAL FROM BLDG 19 A REGULATOR/METER ASSEMBLY TO CONNECTION TO THE BUILDING ENTRANCE.

NEW 1-INCH NG (UG) SERVICE LATERAL FROM BLDG 19 A REGULATOR/METER ASSEMBLY TO CONNECTION TO THE BUILDING ENTRANCE.

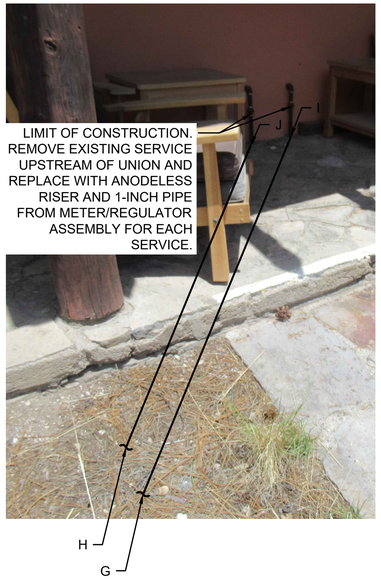

LIMIT OF CONSTRUCTION. REMOVE EXISTING SERVICE UPSTREAM OF UNION AND REPLACE WITH ANODELESS RISER AND 1-INCH PIPE FROM METER/REGULATOR ASSEMBLY FOR EACH SERVICE.

1 – BUILDING #20 A AND B SERVICE CONNECTION
NO SCALE

BUILDING 21 REGULATOR/ METER ASSEMBLY TO BE REMOVED AND RELOCATED FOR USE AT THE FIELD OPERATIONS CENTER. CONTRACTOR TO CUT AND CAP EXISTING PIPING MINIMUM 1-FOOT BELOW GROUND.

2 – BUILDING #21 SERVICE CONNECTION
NO SCALE

NEW 2-INCH NG (UG) MAIN FROM BLDG 24 TO BLDGS. 17, 18 AND 19.

BLDG 24

4 – NEW MAIN ROUTE ALONG EAST SIDE OF BLDG. 24 TO BLDGS. 17, 18, 19, AND 21
NO SCALE

NEW 1-INCH NG (UG) SERVICE LATERAL FROM BLDG REGULATOR/METER ASSEMBLIES TO CONNECTION TO THE MAIN, TYP OF 4.

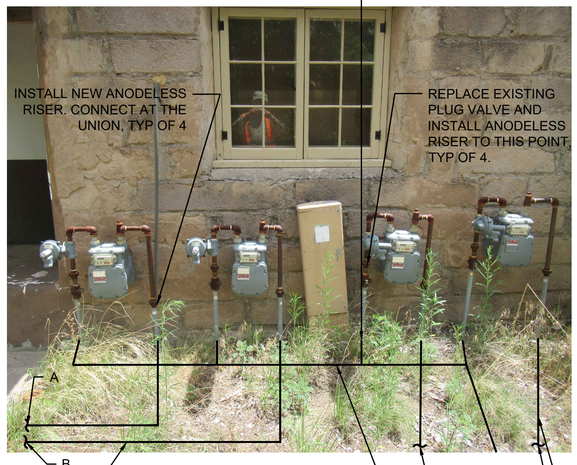

NEW 2-INCH NG (UG) MAIN.

NEW 1-INCH NG (UG) SERVICE LATERAL FROM BLDG 23 A AND 23 B REGULATOR/METER ASSEMBLY TO CONNECTION TO THE BUILDING ENTRANCE.

NEW 1-INCH NG (UG) SERVICE LATERAL FROM BLDG 24 B AND 24 C REGULATOR/METER ASSEMBLY TO CONNECTION TO THE BUILDING ENTRANCE.

5 – BUILDING #23A, 23B, AND 24C SERVICE CONNECTION
NO SCALE

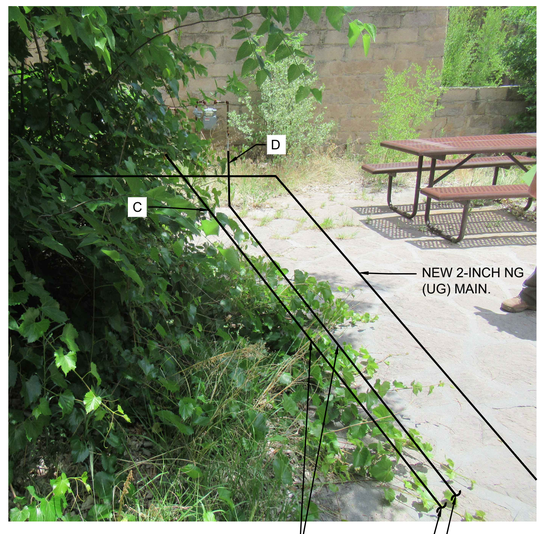

NEW 2-INCH NG (UG) MAIN.

NEW 1-INCH NG (UG) SERVICE LATERAL FROM BLDG 24 B AND 24 C REGULATOR/METER ASSEMBLY TO CONNECTION TO THE BUILDING ENTRANCE.

E
F

LIMIT OF CONSTRUCTION. REMOVE EXISTING SERVICE UPSTREAM OF UNION AND REPLACE WITH ANODELESS RISER AND 1-INCH PIPE FROM METER/REGULATOR ASSEMBLY FOR EACH SERVICE.

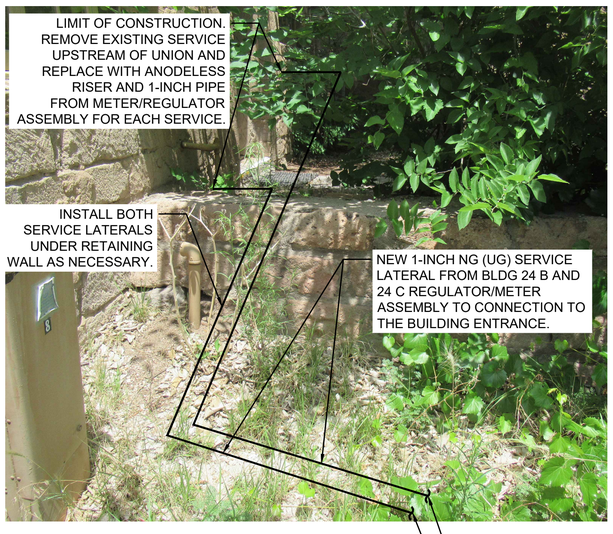

6 – BUILDING #24 B AND C SERVICE LATERAL ROUTING
NO SCALE

MICAH E. JOHNSON
NEW MEXICO
25223
Digitally signed by Micah E. Johnson
Date: 2025.04.08 15:17:22-06'00'
PROFESSIONAL ENGINEER

DESIGNED: D. STIEB	SUB SHEET NO. 02C505	TITLE OF SHEET: CIVIL NATURAL GAS DETAILS (5 OF 7) BANDELIER NATIONAL MONUMENT	DRAWING NO. 315 182751
CADD E. SHERIFI			PMIS/PKG NO. 266697
TECH. REVIEW: T. PRICE			SHEET 94 OF 203
DATE: 04/11/2025			

3/30/2025 9:15 PM FIGUEROA,I R24 02C505_D3167658_DETAILS.DWG XG-Border_BAND