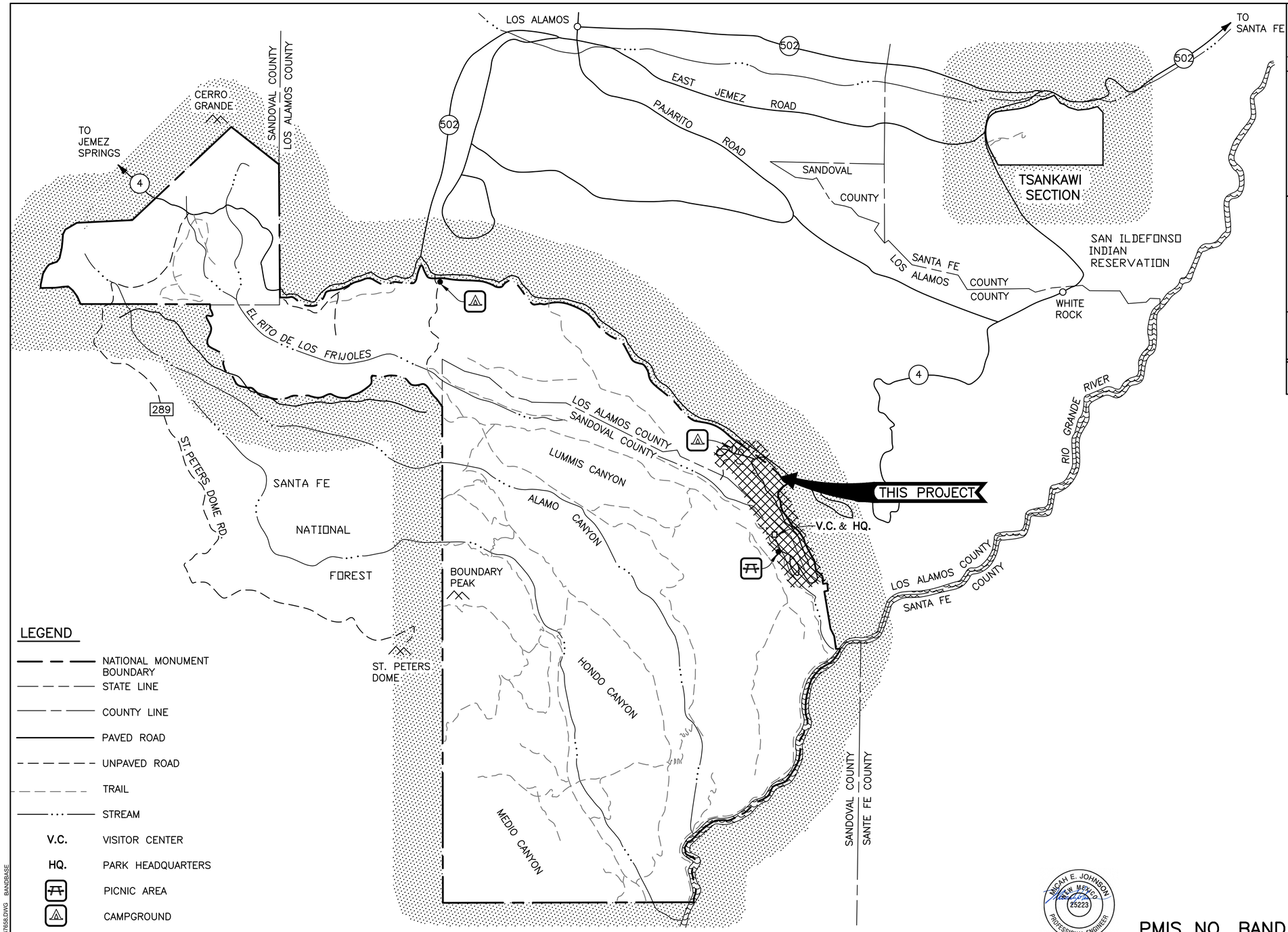


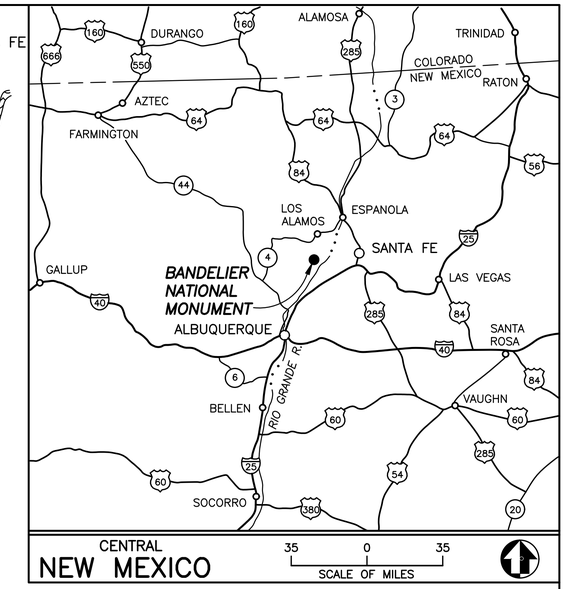


## LEGEND

- NATIONAL MONUMENT BOUNDARY
- STATE LINE
- COUNTY LINE
- PAVED ROAD
- UNPAVED ROAD
- TRAIL
- STREAM
- V.C. — VISITOR CENTER
- HQ. — PARK HEADQUARTERS
- PICNIC AREA
- CAMPGROUND

MICAH E. JOHNSON NEW MEXICO 25223 PROFESSIONAL ENGINEER

Digitally signed by Micah E. Johnson
Date: 2026.04.07 12:39:04-06'00'

PMIS NO. BAND 266697

SCALE OF FEET
4,000 0 4,000 8,000
1 0 1 2
SCALE OF KILOMETERS

# BANDELIER NATIONAL MONUMENT

1 REVISED BY ADDENDUM NO. 1

BASIC DATA:
REVISED & REDRAWN 8/93. UPDATED 10/98. SGS.

| A/E FIRM | Mark | Sheet | REVISION | Initial |
|---|---|---|---|---|
| JACOBS GOVERNMENT SERVICES COMPANY ALBUQUERQUE, NM | 1 | MULT. | CULVERT AND EROSION REPAIRS | JM/MJ |

QUALITY DESIGN CERTIFICATION
- ☐ Prepared in Accordance with Design Development (Title I) _____ Drawing No.
- OR
- ☐ Variance from Design Development (Title I) Approved by Superintendent on _____ Date
- OR
- ☐ Construction Drawing Not Preceded by Design Development (Title I)

Project Manager _____ Date

NATIONAL PARK SERVICE

**CONSTRUCTION DRAWINGS**

UNITED STATES
DEPARTMENT OF THE INTERIOR

NATIONAL PARK SERVICE
DENVER SERVICE CENTER

TITLE OF DRAWING
UNDERGROUND UTILITIES REHABILITATION
LOCATION WITHIN PARK
MONUMENT—WIDE
NAME OF PARK
BANDELIER NATIONAL MONUMENT
REGION COUNTY STATE
INTERMOUNTAIN SANDOVAL AND LOS ALAMOS NEW MEXICO

DRAWING NO. 315 182751A

PKG. NO. 26 66 97

SHEET 1A OF 203

DUDLEYMJ R24 00G001_D3167698.DWG BANDBASE

1/14/2026

# INDEX TO DRAWINGS

## 01-GENERAL

| S. No. | DWG. Number | DESCRIPTION |
|---|---|---|
| 1A | 00G001 | COVER SHEET |
| 1 2A | 00G002 | INDEX TO DRAWINGS |
| 3A | 00G003 | GENERAL NOTES |
| 4 | 00G004 | OVERALL SITE PLAN |
| 5 | 00G005 | STRUCTURAL NOTES 1 |
| 6 | 00G006 | STRUCTURAL NOTES 2 |
| 7 | 00G007 | STRUCTURAL STATEMENT OF SPECIAL INSPECTIONS 1 |
| 8 | 00G008 | STRUCTURAL STATEMENT OF SPECIAL INSPECTIONS 2 |
| 9 | 00G009 | STRUCTURAL STATEMENT OF SPECIAL INSPECTIONS 3 |
| 10 | 00G010 | PROCESS MECHANICAL NOTES & LEGEND 1 |
| 11 | 00G011 | PROCESS FLOW DIAGRAM |
| 12 | 00G012 | INSTRUMENTATION & CONTROL LEGEND SHEET 1 OF 2 |
| 13 | 00G013 | INSTRUMENTATION & CONTROL LEGEND SHEET 2 OF 2 |
| 14 | 00G014 | ELECTRICAL LEGEND 1 |
| 15 | 00G015 | ELECTRICAL LEGEND 2 |
| 16 | 00G016 | ELECTRICAL ABBREVIATIONS |
| 17 | 00G017 | PLUMBING SYMBOLS AND ABBREVIATIONS |
| 18 | 00G018 | MECHANICAL SYMBOLS AND ABBREVIATIONS |

## 02-SITE UTILITIES

| | | |
|---|---|---|
| 19 | 02C001 | PLAN AND PROFILE SHEET INDEX |
| 20 | 02C002 | CIVIL LEGEND AND NOTES |
| 21 | 02C003 | SITE DEMOLITION PLAN 1 OF 2 |
| 22 | 02C004 | SITE DEMOLITION PLAN 2 OF 2 |
| 23 | 02C005 | BL 'MESA' STA 0+00 TO 9+90 PLAN AND PROFILE |
| 24 | 02C006 | BL 'HIGHWAY 4' STA 0+00 TO 01+62 PLAN AND PROFILE |
| 25 | 02C007 | BL 'ABERT'S SQUIRREL LOOP' STA 0+00 TO 6+17 PLAN AND PROFILE |
| 26 | 02C007A | BL 'ABERT'S SQUIRREL LOOP' STA 6+17 TO 14+50 PLAN AND PROFILE |
| 27 | 02C007B | BL 'ABERT'S SQUIRREL LOOP' SANITARY SEWER PLAN AND PROFILE |
| 28 | 02C008 | BL 'BLACK BEAR LOOP 1' STA 0+00 TO 2+22 PLAN AND PROFILE |
| 29 | 02C008A | BL 'BLACK BEAR LOOP 2' STA 0+00 TO 11+30 PLAN AND PROFILE |
| 30 | 02C008B | BL 'BLACK BEAR LOOP' SANITARY SEWER PLAN AND PROFILE |
| 31 | 02C009 | BL 'CAMPGROUND ROAD' STA 0+00 TO 9+25 PLAN AND PROFILE |
| 32 | 02C010 | BL 'CAMPGROUND ROAD' STA 9+25 TO 19+28 PLAN AND PROFILE |
| 33 | 02C011 | BL 'COYOTE LOOP' STA 0+00 TO 6+50 PLAN AND PROFILE |
| 34 | 02C011A | BL 'COYOTE LOOP' STA 6+50 TO 18+26 PLAN AND PROFILE |
| 35 | 02C012 | BL 'COOPERS HAWK ROAD' STA 0+00 TO 7+35 PLAN AND PROFILE |
| 36 | 02C013 | BL 'COOPERS HAWK ROAD' STA 7+35 TO 16+30 PLAN AND PROFILE |
| 37 | 02C013A | BL 'COOPERS HAWK ROAD' SANITARY SEWER PLAN AND PROFILE |
| 38 | 02C014 | BL 'SALTBRUSH COURT' STA 0+00 TO 10+37 PLAN AND PROFILE |
| 39 | 02C014A | BL 'SALTBRUSH COURT' SANITARY SEWER PLAN |
| 40 | 02C014B | BL 'SALTBRUSH COURT' SANITARY SEWER PLAN AND PROFILE |
| 41 | 02C015 | BL 'PAINTBRUSH COURT' STA 0+00 TO 8+48 PLAN AND PROFILE |
| 42 | 02C015A | BL 'PAINTBRUSH COURT' SANITARY SEWER PLAN |
| 43 | 02C016 | BL 'ENTRANCE ROAD' STA 0+00 TO 8+75 PLAN AND PROFILE |
| 44 | 02C017 | BL 'ENTRANCE ROAD' STA 8+75 TO 18+25 PLAN AND PROFILE |
| 45 | 02C018 | BL 'ENTRANCE ROAD' STA 18+25 TO 27+75 PLAN AND PROFILE |
| 46 | 02C019 | BL 'ENTRANCE ROAD' STA 27+75 TO 37+75 PLAN AND PROFILE |
| 47 | 02C020 | BL 'ENTRANCE ROAD' STA 37+75 TO 47+50 PLAN AND PROFILE |
| 48 | 02C021 | BL 'ENTRANCE ROAD' STA 47+50 TO STA 57+25 PLAN AND PROFILE |
| 49 | 02C022 | BL 'ENTRANCE ROAD' STA 57+25 TO 66+75 PLAN AND PROFILE |
| 50 | 02C023 | BL 'FIRE TOWER LANE' PLAN |
| 51 | 02C024 | BL 'ENTRANCE ROAD' STA 66+75 TO 76+50 PLAN AND PROFILE |
| 52 | 02C025 | BL 'ENTRANCE ROAD' STA 76+50 TO 86+25 PLAN AND PROFILE |
| 53 | 02C026 | BL 'ENTRANCE ROAD' STA 86+25 TO 95+75 PLAN AND PROFILE |
| 54 | 02C027 | BL 'ENTRANCE ROAD' STA 95+75 TO 105+50 PLAN AND PROFILE |
| 55 | 02C028 | BL 'ENTRANCE ROAD' STA 105+50 TO 115+25 PLAN AND PROFILE |
| 56 | 02C029 | BL 'ENTRANCE ROAD' STA 115+25 TO 125+25 PLAN AND PROFILE |
| 57 | 02C030 | BL 'ENTRANCE ROAD' STA 125+25 TO 134+50 PLAN AND PROFILE |
| 1 58A | 02C031 | BL 'ENTRANCE ROAD' STA 134+50 TO 144+50 PLAN AND PROFILE |
| 59 | 02C032 | BL 'ENTRANCE ROAD' STA 144+50 TO 154+25 PLAN AND PROFILE |
| 1 60A | 02C033 | BL 'ENTRANCE ROAD' STA 154+25 TO 159+54 PLAN AND PROFILE |
| 61 | 02C034 | CANYON LOOP STA 159+54 TO 162+00 PLAN AND PROFILE |
| 62 | 02C035 | CANYON LOOP STA 162+00 TO 164+50 PLAN AND PROFILE |
| 63 | 02C036 | CANYON LOOP STA 164+50 TO 167+00 PLAN AND PROFILE |
| 64 | 02C037 | CANYON LOOP STA 167+00 TO 169+75 PLAN AND PROFILE |
| 65 | 02C038 | CANYON LOOP STA 169+75 TO 172+25 PLAN AND PROFILE |
| 66 | 02C039 | CANYON LOOP STA 172+25 TO 174+50 PLAN AND PROFILE |
| 67 | 02C040 | CANYON LOOP STA 174+50 TO 177+00 PLAN AND PROFILE |
| 68 | 02C041 | CANYON LOOP STA 177+00 TO 179+25 PLAN AND PROFILE |
| 69 | 02C042 | CANYON LOOP STA 179+25 TO 182+00 PLAN AND PROFILE |
| 70 | 02C043 | CANYON LOOP STA 182+00 TO 184+19 PLAN AND PROFILE |
| 71 | 02C050 | CANYON PARKING LOT SEWER PLAN AND PROFILE |
| 72 | 02C051 | CANYON ENTRANCE ROAD SEWER PLAN AND PROFILE |
| 1 73A | 02C052 | COTTONWOOD (BLDG 1) COMFORT STATION SEWER PLAN AND PROFILE |
| 74 | 02C100 | EXISTING MAIN BLUE WATER TANK SITE PLAN |
| 75 | 02C101 | ENTRANCE ROAD WATER TANK SITE PLAN |
| 76 | 02C200 | CANYON SERVICE LATERALS OVERVIEW |
| 77 | 02C201 | CANYON SERVICE LATERALS SITE PLAN (1 OF 7) |
| 78 | 02C202 | CANYON SERVICE LATERALS SITE PLAN (2 OF 7) |
| 79 | 02C203 | CANYON SERVICE LATERALS SITE PLAN (3 OF 7) |
| 80 | 02C204 | CANYON SERVICE LATERALS SITE PLAN (4 OF 7) |
| 81 | 02C205 | CANYON SERVICE LATERALS SITE PLAN (5 OF 7) |
| 82 | 02C206 | CANYON SERVICE LATERALS SITE PLAN (6 OF 7) |
| 83 | 02C207 | CANYON SERVICE LATERALS SITE PLAN (7 OF 7) |

## 02-SITE UTILITIES CONTINUES

| | | |
|---|---|---|
| 84 | 02C300 | CIVIL DETAILS (1 OF 6) |
| 85 | 02C301 | CIVIL DETAILS (2 OF 6) |
| 86 | 02C302 | CIVIL DETAILS (3 OF 6) |
| 87 | 02C303 | CIVIL DETAILS (4 OF 6) |
| 88 | 02C304 | CIVIL DETAILS (5 OF 6) |
| 89 | 02C305 | CIVIL DETAILS (6 OF 6) |
| 90 | 02C501 | NATURAL GAS DETAILS (1 OF 7) |
| 91 | 02C502 | NATURAL GAS DETAILS (2 OF 7) |
| 92 | 02C503 | NATURAL GAS DETAILS (3 OF 7) |
| 93 | 02C504 | NATURAL GAS DETAILS (4 OF 7) |
| 94 | 02C505 | NATURAL GAS DETAILS (5 OF 7) |
| 95 | 02C506 | NATURAL GAS DETAILS (6 OF 7) |
| 96 | 02C507 | NATURAL GAS DETAILS (7 OF 7) |
| 97 | 02S101 | BRIDGE CROSSING PLAN & ELEVATION |
| 98 | 02S501 | BRIDGE HANGER AND PIPE DETAILS |

## 02-ELECTRICAL

| | | |
|---|---|---|
| 99 | 02E100 | SITE PLAN SHEET INDEX |
| 100 | 02E101 | PRIMARY DISTRIBUTION HWY 4 CROSSING 1 |
| 1 101A | 02E102 | PRIMARY DISTRIBUTION HWY 4 CROSSING 2 |
| 102 | 02E103 | PRIMARY DISTRIBUTION ABERT'S SQUIRREL LOOP |
| 103 | 02E105 | PRIMARY DISTRIBUTION BLACK BEAR LOOP |
| 104 | 02E106 | PRIMARY DISTRIBUTION CAMPGROUND ROAD 1 |
| 105 | 02E107 | PRIMARY DISTRIBUTION CAMPGROUND ROAD 2 |
| 106 | 02E108 | PRIMARY DISTRIBUTION COYOTE LOOP |
| 107 | 02E110 | PRIMARY DISTRIBUTION COOPERS HAWK RD 1 |
| 108 | 02E111 | PRIMARY DISTRIBUTION COOPERS HAWK RD 2 |
| 109 | 02E112 | PRIMARY DISTRIBUTION SALTBRUSH CT |
| 110 | 02E113 | PRIMARY DISTRIBUTION PAINTBRUSH CT |
| 111 | 02E114 | PRIMARY DISTRIBUTION ENTRANCE STATION |
| 112 | 02E115 | PRIMARY DISTRIBUTION ENTRANCE ROAD 1 |
| 113 | 02E116 | PRIMARY DISTRIBUTION ENTRANCE ROAD 2 |
| 114 | 02E117 | PRIMARY DISTRIBUTION ENTRANCE ROAD 3 |
| 115 | 02E118 | PRIMARY DISTRIBUTION ENTRANCE ROAD 4 |
| 116 | 02E119 | PRIMARY DISTRIBUTION ENTRANCE ROAD 5 |
| 117 | 02E120 | PRIMARY DISTRIBUTION ENTRANCE ROAD 6 |
| 118 | 02E122 | PRIMARY DISTRIBUTION ENTRANCE ROAD 7 |
| 119 | 02E125 | PRIMARY DISTRIBUTION ENTRANCE ROAD 10 |
| 120 | 02E126 | PRIMARY DISTRIBUTION ENTRANCE ROAD 11 |
| 121 | 02E130 | PRIMARY DISTRIBUTION ENTRANCE ROAD 15 |
| 122 | 02E132 | PRIMARY DISTRIBUTION ENTRANCE ROAD 17 |
| 123 | 02E134 | PRIMARY DISTRIBUTION ALCOVE HOUSE 2 |
| 124 | 02E136 | PRIMARY DISTRIBUTION AGOYA LANE 1 |
| 125 | 02E137 | PRIMARY DISTRIBUTION AGOYA LANE 2 |
| 126 | 02E501 | ELECTRICAL DETAILS |
| 127 | 02E502 | ELECTRICAL DETAILS |
| 128 | 02E503 | ELECTRICAL DETAILS |
| 129 | 02E504 | ELECTRICAL DETAILS |
| 130 | 02E505 | ELECTRICAL DETAILS |
| 131 | 02E506 | ELECTRICAL DETAILS |
| 132 | 02E507 | ELECTRICAL DETAILS |
| 133 | 02E508 | ELECTRICAL DETAILS |
| 134 | 02E509 | ELECTRICAL DETAILS |
| 135 | 02E601 | MESA TOP DEMOLITION ONE-LINE DIAGRAM |
| 1 136A | 02E602 | MESA TOP PRIMARY DISTRIBUTION ONE-LINE DIAGRAM 1 |
| 137 | 02E603 | MESA TOP PRIMARY DISTRIBUTION ONE-LINE DIAGRAM 2 |
| 138 | 02E604 | CANYON PRIMARY DISTRIBUTION ONE-LINE DIAGRAM |
| 139 | 02E610 | SITE PANEL SCHEDULES |
| 140 | 02E611 | SITE PANEL SCHEDULES |

## 03 - VAULTS

| | | |
|---|---|---|
| 141 | 03M401 | EXISTING MAIN BLUE WATER TANK VALVE VAULTS 1 |
| 142 | 03M402 | EXISTING MAIN BLUE WATER TANK VALVE VAULTS 2 |
| 143 | 03M403 | EXISTING MAIN BLUE WATER TANK VALVE VAULTS 3 |

## 04 - ROADWAY IMPROVEMENTS

| | | |
|---|---|---|
| 144 | 04C101 | ROADWAY PLAN |
| 1 145A | 04C102 | ROADWAY PLAN |
| 146A | 04C103 | ROADWAY PLAN |
| 147 | 04C301 | PULVERIZED PAVEMENT TYPICAL SECTION |
| 1 148A | 04C302 | ENTRANCE ROAD TYPICAL SECTION |
| 149 | 04C303 | VISITOR CENTER TYPICAL SECTION |
| 150 | 04C401 | VISITOR CENTER SITE PLAN |
| 151 | 04C402 | VISITOR CENTER SITE PLAN |
| 152 | 04C403 | VISITOR CENTER ABA GRADING |
| 153 | 04C501 | PAVEMENT MARKING DETAILS 1 OF 3 |
| 154 | 04C502 | PAVEMENT MARKING DETAILS 2 OF 3 |
| 155 | 04C503 | PAVEMENT MARKING DETAILS 3 OF 3 |
| 156 | 04C504 | RUMBLE STRIP DETAILS |
| 157 | 04C505 | PAVEMENT TRANSITION DETAILS |
| 158 | 04C506 | TEMPORARY TRAFFIC CONTROL DETAILS |
| 159 | 04C507 | METAL CULVERT PIPE COUPLING DETAILS |
| 160 | 04C508 | CULVERT BACKFILL DETAILS |
| 161 | 04C509 | CULVERT END SECTION DETAILS |
| 162 | 04C510 | CULVERT PIPE COVER DETAILS |
| 1 163A | 04C511 | CONCRETE WHEELSTOP AND CONCRETE CURB DETAIL |
| 164 | 04C512 | MINOR CONCRETE PAVEMENT DETAILS |
| 165 | 04C513 | MINOR CONCRETE PAVEMENT JOINT SEALING DETAILS |
| 204 | 04C104 | CULVERT REPAIR PLAN |
| 205 | 04C105 | EROSION REPAIR PLAN |
| 1 206 | 04C514 | GUARDRAIL DETAILS |
| 207 | 04C515 | TREE PROTECTION DETAIL |

## 08 - INSTRUMENTATION & CONTROLS

| | | |
|---|---|---|
| 166 | 08Y601 | NETWORK TOPOLOGY |
| 167 | 08Y602 | FRIJOLES CANYON MAIN LIFT STATION P&ID |
| 168 | 08Y603 | EXISTING MAIN BLUE WATER TANK P&ID |
| 169 | 08Y604 | MESA WATER DISTRIBUTION P&ID |
| 170 | 08Y605 | CANYON MECHANICAL BUILDING P&ID |
| 171 | 08Y606 | PROPOSED ENTRANCE ROAD WATER TANK P&ID |
| 172 | 08Y607 | FRIJOLES CANYON WATER DISTRIBUTION P&ID |
| 173 | 08Y608 | FACILITY OPERATIONS CENTER NETWORK INTERFACE PANEL NIP-100 |
| 174 | 08Y609 | PROPOSED ENTRANCE ROAD WATER TANK CONTROL PANEL LAYOUT - LCP-400 |
| 175 | 08Y610 | PARK ENTRANCE STATION NETWORK INTERFACE PANEL NIP-500 |
| 176 | 08Y701 | DETAIL DRAWING |

## 10 - CANYON MECHANICAL BUILDING

| | | |
|---|---|---|
| 177 | 10A101 | CANYON MECHANICAL BUILDING FLOOR PLAN, AND ELEVATIONS |
| 178 | 10SM101 | CANYON MECHANICAL BUILDING FLOOR PLAN |
| 179 | 10SM301 | CANYON MECHANICAL BUILDING SECTION 1 |
| 180 | 10SM302 | CANYON MECHANICAL BUILDING SECTION 2 |
| 181 | 10SM303 | CANYON MECHANICAL BUILDING SECTION 3 |
| 182 | 10SM901 | CANYON MECHANICAL BUILDING ISOMETRIC |
| 183 | 10E101 | CANYON MECHANICAL BUILDING FLOOR PLAN |
| 184 | 10E601 | CANYON MECHANICAL BUILDING ONE-LINE & SCHEDULES |
| 185 | 10M101 | CANYON MECHANICAL BUILDING FLOOR PLAN |
| 186 | 10M501 | CANYON MECHANICAL BUILDING MECHANICAL DETAILS |
| 187 | 10P101 | CANYON MECHANICAL BUILDING FLOOR PLAN |
| 188 | 10P501 | CANYON MECHANICAL BUILDING PLUMBING DETAILS |
| 189 | 10P502 | CANYON MECHANICAL BUILDING PLUMBING DETAILS |

## 15 - ENTRANCE ROAD WATER TANK

| | | |
|---|---|---|
| 190 | 15SM101 | ENTRANCE ROAD WATER TANK FOUNDATION PLAN |
| 191 | 15SM102 | ENTRANCE ROAD WATER TANK TOP PLAN |
| 192 | 15SM301 | ENTRANCE ROAD WATER TANK SECTION 1 |
| 193 | 15SM302 | ENTRANCE ROAD WATER TANK SECTION 2 |
| 194 | 15SM303 | ENTRANCE ROAD WATER TANK SECTION 3 |
| 195 | 15SM501 | DETAILS |
| 196 | 15SM502 | DETAILS |
| 197 | 15SM503 | DETAILS |
| 198 | 15SM504 | DETAILS |
| 199 | 15SM505 | DETAILS |
| 200 | 15SM506 | DETAILS |
| 201 | 15SM901 | ENTRANCE ROAD WATER TANK ISOMETRIC |
| 202 | 15E101 | ENTRANCE ROAD WATER TANK TOP PLAN |

## 30 -MESA TOP COMFORT STATION

| | | |
|---|---|---|
| 203 | 30M101 | MESA TOP COMFORT STATION PRESSURE BOOSTERS |

MICAH E. JOHNSON NEW MEXICO 25223 PROFESSIONAL ENGINEER

Digitally signed by Micah E. Johnson
Date: 2026.04.07 12:34:32-06'00'

FULL SIZE DRAWINGS = 22"x34" 0" 1"
BAR MEASURES 1" LONG

1 REVISED BY ADDENDUM NO. 1

| | | | | |
|---|---|---|---|---|
| A/E FIRM<br>JACOBS GOVERNMENT SERVICES COMPANY<br>ALBUQUERQUE, NM | DESIGNED: M. JOHNSON<br>CADD: J. FIGUEROA<br>TECH. REVIEW: D. HUANG<br>DATE: 01/16/2026 | SUB SHEET NO.<br>00G002 | TITLE OF SHEET<br>GENERAL<br>INDEX TO DRAWINGS<br>BANDELIER NATIONAL MONUMENT | DRAWING NO. 315<br>182751<br>PMIS/PKG NO. 266697<br>SHEET 2A OF 203 |

3/11/2026 8:54 AM DUDLEYMJ R24 00G002_D3167658.DWG XG:Border_BAND

BASIC DATA:

## SUMMARY OF WORK

THE WORK REQUIRED IN THE SCOPE AS DESCRIBED IN SPECIFICATION 01 27 00, DEFINITION OF CONTRACT LINE ITEMS, INCLUDES THE FOLLOWING AT BANDELIER NATIONAL MONUMENT DEVELOPED AREAS, AS DESCRIBED HEREIN BUT NOT LIMITED TO:

- GENERAL CONDITIONS. INCLUDE GENERAL REQUIREMENTS, MOBILIZATION/DEMOBILIZATION, EROSION AND SEDIMENT CONTROL, TRAFFIC CONTROL, SURFACE RESTORATION, AND PROTECTION AND PRESERVATION OF HISTORICAL BUILDINGS AND FEATURES AS REQUIRED TO COMPLETE THE WORK PER CONTRACT SPECIFICATIONS AND DRAWINGS.
- THE WORK IS TO BE COMPLETED WITHIN TWO NATIONAL REGISTRY OF HISTORIC PLACES DISTRICTS, THE CIVILIAN CONSERVATION CORPS (CCC) HISTORIC DISTRICT IN THE CANYON AREA, AND MISSION 66 HISTORIC DISTRICT IN THE MESA TOP AREA.
- REPLACE UTILITY SYSTEMS AT THE MAJOR DISTRIBUTION AND COLLECTION SYSTEMS TO ADDRESS DEFERRED MAINTENANCE AND CODE DEFICIENCIES ON 60 PLUS YEAR OLD SYSTEMS UTILIZING EXISTING UTILITY CORRIDORS AND ROAD SHOULDERS AND/OR UNDER ROADS TO MAINTAIN CODE REQUIRED SEPARATION HORIZONTALLY AND VERTICALLY (SEE DWG 02C002) WHILE MITIGATING IMPACT TO SENSITIVE NATURAL AND CULTURAL RESOURCE AREAS. UTILITIES INCLUDE UNDERGROUND POTABLE WATER, PRIMARY ELECTRICAL, FIBER–OPTIC, NATURAL GAS, AND SANITARY SEWER.
- THE MAIN PARK WATER SYSTEM CONSISTS OF:
  - REPLACING PRIMARY DISTRIBUTION WATERLINES, SERVICE LINES, FIRE HYDRANTS, PRESSURE REDUCING VALVES AND FLOW CONTROL VALVES, THROUGHOUT THE MESA HOUSING, JUNIPER CAMPGROUND, ENTRANCE ROAD AND CANYON AREAS.
  - REPLACEMENT OF VALVES AND DRAIN LINE AT THE EXISTING MAIN BLUE WATER TANK.
  - CONSTRUCTION OF ENTRANCE ROAD WATER TANK; 24,000 GALLON BELOW–GRADE.
  - CONSTRUCTION OF CANYON MECHANICAL BUILDING,
  - ABANDONING EXISTING CANYON UNDERGROUND CONCRETE WATER TANK,
  - REMOVING WATER MAIN HANGING FROM THE CANYON CLIFF,
  - PROVIDING HYDROPNEUMATIC TANKS WITH PUMPS AS WATER PRESSURE BOOSTERS AT COMFORT STATIONS,
- THE PRIMARY ELECTRICAL DISTRIBUTION SYSTEM CONSISTS OF:
  - REPLACING MESA TOP SINGLE–PHASE FEED WITH A NEW THREE–PHASE PRIMARY ELECTRICAL SERVICE,
  - FACILITATE FUTURE INTERCONNECTION TIE BETWEEN THE MESA TOP AND THE FRIJOLES CANYON DISTRIBUTION SYSTEMS, AND
  - REPLACING AGING ELECTRICAL FEEDERS, EQUIPMENT, AND CONDUCTORS FOR THE THREE MAIN AREAS AT MESA TOP, ENTRANCE ROAD, AND FRIJOLES CANYON.
- THE COMMUNICATIONS NETWORK CONSISTS OF:
  - EXTENDING EXISTING FIBER–OPTIC FROM THE FRIJOLES CANYON TO MESA TOP AREAS INCLUDING FOC.
  - CONNECTING THE EXISTING 35,000 GALLON ABOVE–GRADE MAIN BLUE WATER STORAGE TANK TO THE MESA TOP ABERT'S SQUIRREL LOOP COMFORT STATION VIA COPPER COMMUNICATIONS CABLE.
  - PROVIDING THE REMOTE MONITORING SYSTEM CELLULAR MODEMS AND ANTENNAS FOR A CLOUD BASED MONITORING SYSTEM AT ABERT'S SQUIRREL LOOP COMFORT STATION, CANYON MECHANICAL BUILDING, PRV VAULT, AND MAIN LIFT STATION.
- THE NATURAL GAS SYSTEM CONSISTS OF:
  - REPLACING EXISTING NATURAL GAS DISTRIBUTION LINES AND SERVICE LINES FOR MESA TOP (MESA HOUSING, FOC, AND FIRE TOWER) AND FRIJOLES CANYON AREAS (VISITOR CENTER AND OTHER BUILDINGS).
- THE WASTEWATER SYSTEM CONSISTS OF:
  - REPLACING EXISTING SEWER PIPES, MANHOLES, AND LATERALS AT MESA TOP, JUNIPER CAMPGROUND, AND FRIJOLES CANYON DEVELOPED AREAS WHERE SHOWN ON DRAWINGS.
  - PROVIDING A GRAVITY LATERAL CROSSING THE RITO DE LOS FRIJOLES STREAM SUSPENDED FROM THE PEDESTRIAN BRIDGE TO RE–ACTIVATE THE EXISTING COTTONWOOD (BLDG #1) COMFORT STATION.

## CONTRACT LINE ITEMS CLIN

REFER TO SPECIFICATION 01 27 00 DEFINITION OF CONTRACT LINE ITEMS

CLIN 0001 MAIN PARK WATER SYSTEM (DWGS 02C003, 02C005, 02C007, 02C007A, 02C008A, 02C009, 02C010, 02C011A, 02C017 – 02C022, 02C024 – 02C037, 02C100, 02C101, 02E125, 02E126, 02E130, 02E136 & 30M101)

CLIN 0002 MESA HOUSING AND FIELD OPERATIONS CENTER (FOC) WATER MAINS AND SERVICE LINES (DWGS 02C012, 02C013, 02C014 & 02C015)

CLIN 0003 PRIMARY ELECTRICAL DISTRIBUTION (DWGS 02E101 – 02E115)

CLIN 0004 CELLULAR NETWORK (DWG 08Y601)

CLIN 0005 ROCK EXCAVATION (WHERE ENCOUNTERED)

CLIN 0006 ROADWAY (DWGS 04C404 – 04C406 & 04C107 – 04C109)

CLIN OPTION A PRIMARY ELECTRICAL INTER–CONNECTION BETWEEN FRIJOLES CANYON AND MESA TOP SYSTEMS (DWGS 02E115 – 02E122)

CLIN OPTION B FRIJOLES CANYON WATER AND NATURAL GAS MAIN LOOP (DWGS 02C037 – 02C043 & 02C201 – 02C203, 02C206 & 02C207)

CLIN OPTION C FRIJOLES CANYON WASTEWATER SYSTEM (DWGS 02C201 – 02C205, 02C050 & 02C051)

CLIN OPTION D FRIJOLES CANYON NATURAL GAS LATERALS (DWGS 02C201 – 02C203 & 02C206)

CLIN OPTION E FIBER–OPTIC CABLE FROM EXISTING FIBER HANDHOLE NEAR THE ENTRANCE ROAD (PAJARITO) MICROWAVE TOWER TO FOC AND ENTRANCE STATION (DWG 08Y601)

CLIN OPTION F FRIJOLES CANYON VISITOR CENTER FIBER PATHWAY (DWG 02E132 & 02E134)

CLIN OPTION G DEMOLITION OF UTILITY FEATURES (ALL DWGS CONTAINING ABANDONED, ABOVE GROUND FEATURE AND UNDERGROUND VALVES)

CLIN OPTION H DEMOLITION OF EXISTING CANYON UNDERGROUND CONCRETE WATER TANK AND EXPOSED SUSPENDED UTILITIES (DWGS 02C003 & 02C004)

CLIN OPTION I JUNIPER CAMPGROUND WATER MAINS AND SERVICE LINES (DWGS 02C007, 02C007A, 02C008, 02C008A, 02C010, 02C011 & 02C011A)

CLIN OPTION J MESA TOP WASTEWATER SYSTEM (DWGS 02C007B, 02C008B, 02C013A, 02C014A, 02C014B & 02C015A)

CLIN OPTION K AGOYO LANE ELECTRICAL SYSTEM (DWGS 02E130, 02E136 & 02E137)

CLIN OPTION L FIRE TOWER LANE WATER AND NATURAL GAS LINE REPLACEMENT (DWG 02C023)

CLIN OPTION M COTTONWOOD COMFORT STATION (BUILDING #1) UTILITY CONNECTIONS (DWGS 02C052, 02S101 & 02E134)

CLIN OPTION N NATURAL GAS SYSTEM (DWGS 02C005, 02C007, 02C009, 02C010, 02C012, 02C013, 02C014, 02C015, 02C017 – 02C040, 02C204 & 02C205)

CLIN OPTION O CULVERT AND EROSION REPAIRS (DWGS 04C102, 04C103, 04C104, 04C105, 04C302, 04C511, 04C514 & 04C515) 1

## PROTECTION, SALVAGE, DEMOLITION & RESTORATION:

1. ARCHAEOLOGICAL INVESTIGATION HAS BEEN PERFORMED WITHIN THE LIMITS OF DISTURBANCE (LOD) AS SHOWN IN THE DRAWINGS. IF PREVIOUSLY UNKNOWN ARTIFACTS OR HUMAN REMAINS, ARE DISCOVERED, STOP WORK IMMEDIATELY. PROCEED WITH CONSTRUCTION AS DIRECTED BY CONTRACTING OFFICER WITH NOTIFICATION GIVEN TO BANDELIER CULTURAL RESOURCES PARK MANAGER.
2. CONTRACTOR IS STRICTLY LIMITED TO THE LIMITS OF DISTURBANCE AS SHOWN ON THE DRAWINGS, AND PAVED AND GRAVELED AREAS UNLESS AUTHORIZED BY CONTRACTING OFFICER. LOD TYPICALLY EXTENDS 3 FT BEYOND EDGE OF PAVEMENT ON CAMPGROUND ROAD, SALTBRUSH COURT, PAINTBRUSH COURT, COOPERS HAWK ROAD AND THE JUNIPER CAMPGROUND LOOPS AND 5 FT BEYOND EDGE OF PAVEMENT ON ENTRANCE ROAD. INSTALL TEMPORARY CONSTRUCTION FENCING ON OPEN COUNTRY AREAS ALONG LOD BOUNDARIES. DO NOT INSTALL TEMPORARY CONSTRUCTION FENCING ALONG PUBLIC ACCESSED ROADS.
3. STAGING AREAS SHOWN ON DWG 00G004.
4. COORDINATE STAGING AREA LIMITS WITH CONTRACTING OFFICER.
5. NATURAL RESOURCE DISTURBANCE SHALL BE MINIMIZED TO GREATEST EXTENT POSSIBLE, INCLUDING REMOVAL OF TREES. ALL NECESSARY NATURAL RESOURCE DISTURBANCE SHALL BE PRE–APPROVED BY NPS STAFF PRIOR TO CONSTRUCTION AND MONITORED BY NPS STAFF DURING CONSTRUCTION.
6. UTILITY INSTALLATION WORK INCLUDES INCIDENTAL REMOVAL AND REPLACEMENT OF EXISTING INFRASTRUCTURE AND NATURAL FEATURES, INCLUDING, BUT NOT LIMITED TO, ROAD SIGNS, PAVEMENT, CURB, GUARDRAIL, RETAINING WALLS, SIDEWALKS, TRAILS, STORM DRAINS, DRAINAGE SWALES, GATES, LIGHT POLES, SURVEY BENCHMARKS. THE DRAWINGS INCLUDE EXISTING FEATURES AS LOCATED BY FIELD SURVEY, BUT MAY NOT INCLUDE ALL FEATURES. CONTRACTOR IS RESPONSIBLE TO PERFORM OWN SITE INVENTORY AND IS RESPONSIBLE FOR RESTORATION OF ALL SITE FEATURES AT NO ADDITIONAL COST TO THE GOVERNMENT. SEE SPECIFICATION 02 41 00 DEMOLITION AND ALSO COORDINATE WITH HISTORIC PRESERVATION REQUIREMENTS PER SPECIFICATION 01 35 91.
7. PROTECT HISTORIC BUILDING EXTERIOR WALLS (SEE DWGS 02C201 – 02C206), HISTORIC RETAINING WALLS (SEE DWGS 02C037 – 02C039, 02C201, 02C202), HISTORIC STONE CURBS AND GUTTERS (SEE DWGS 02C027 – 02C033) AND HISTORIC CULVERT HEADWALLS (SEE DWGS 02C027 – 02C033). REFER TO SPECIFICATION 01 35 91.
8. TEMPORARILY REMOVE DURING CONSTRUCTION AS NEEDED FLAGSTONE PATHWAYS (SEE DWGS 02C201 – 02C206) AND ROADWAY CURB AND GUTTER (SEE DWGS 02C027 – 02C033) AND RE–INSTALL FOLLOWING CONSTRUCTION PER NPS REQUIREMENTS. REFER TO SPECIFICATION 02 41 00 AND 01 35 91.
9. SEE DRAWING 02C002 FOR ADDITIONAL RELATED UTILITY CONSTRUCTION NOTES.
10. CONTRACTOR TO OBTAIN APPROVAL FROM CONTRACTING OFFICER BEFORE DEMOLISHING AND REMOVING EXISTING UTILITIES. NEW UTILITIES, STRUCTURES AND APPURTENANCES TO BE CONSTRUCTED, SUCCESSFULLY TESTED AND COMMISSIONED BEFORE DEMOLITION CONSTRUCTION MAY BEGIN.
11. STOCKPILE AND RESTORE TOP 12 INCHES OF TOPSOIL (IF PRESENT) DURING EXCAVATION OF OVERLAND TRENCHES.
12. COORDINATE WITH NPS STAFF WHEN SOIL PREPARATION IS COMPLETE (SEE SPECIFICATION 32 91 13, SOIL PREPARATION). ALL SEED TO BE GOVERNMENT FURNSHED. SEEDING WILL BE PERFORMED BY NPS STAFF.

MISS UTILITY
Two full business days prior to work call or 811.

TWO FULL BUSINESS DAYS PRIOR TO WORK CALL 811. SEE nm811.org

FULL SIZE DRAWINGS = 22"x34" 0" 1"
BAR MEASURES 1" LONG

1 REVISED BY ADDENDUM NO. 1

MICAH E. JOHNSON NEW MEXICO 25223 PROFESSIONAL ENGINEER
Digitally signed by Micah E. Johnson
Date: 2026.04.07 12:36:51-06'00'

| | | | |
|---|---|---|---|
| DESIGNED: J. FIGUEORA | SUB SHEET NO. | TITLE OF SHEET GENERAL | DRAWING NO. 315 182751 |
| CADD J. FIGUEORA | 00G003 | GENERAL NOTES | PMIS/PKG NO. 266697 |
| TECH. REVIEW: M. JOHNSON | | | SHEET |
| DATE: 01/16/2026 | | BANDELIER NATIONAL MONUMENT | 3A OF 203 |

DUDLEYMJ R24 00G003_D3187648.DWG XG-Border BAND

1/14/2026

BASIC DATA:

CLIN 0001 - MAIN PARK WATER SYSTEM: CONTINUES FROM STA 134+50 TO STA 144+50. FOR DETAILS SEE SPECIFICATION 01 27 00.

CLIN OPTION N - NATURAL GAS SYSTEM: CONTINUES FROM STA 134+50 TO STA 144+50. FOR DETAILS SEE SPECIFICATION 01 27 00.

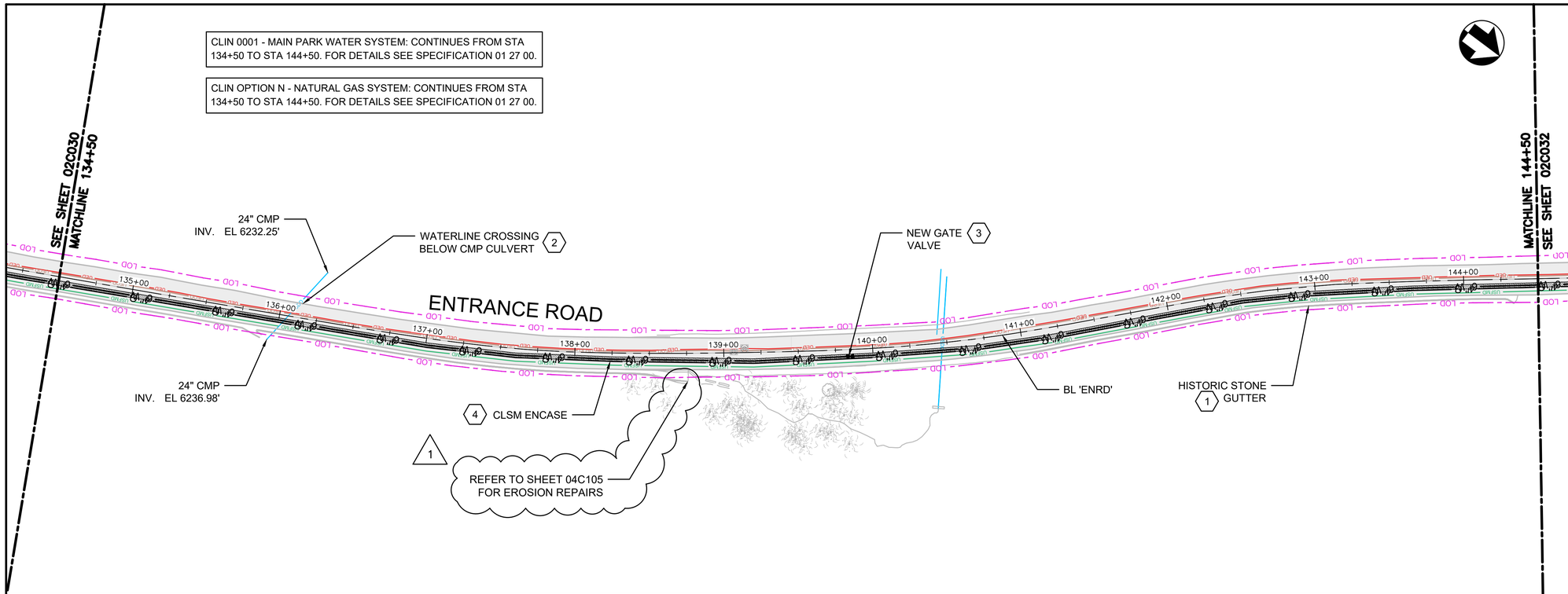


KEYPLAN

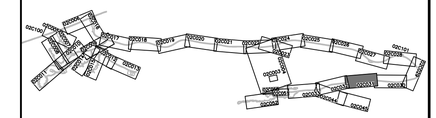

## SHEET KEYNOTES

1. PROTECT HISTORIC STONE GUTTER IN PLACE. SEE NOTES ON SHEET 00G003 AND SPECIFICATION SECTION 01 35 91.
2. INSTALL WATERLINE BELOW EXISTING CMP CULVERT WITH 18" MINIMUM VERTICAL CLEARANCE. NO JOINT IN THE WATERLINE SHALL BE INSTALLED BELOW CROSSING OF CMP. INSTALL OTHER UTILITIES (FC, NG, EC) ABOVE CMP CULVERT WITH 2' MINIMUM COVER. SUPPORT EXISTING CMP.
3. INSTALL 6" GV WITH VALVE BOX PER DETAIL 1, SHEET 02C303.
4. NEW WATERLINE PARALLEL TO EXISTING FORCE MAIN SEWER. WHERE 10-FT HORIZONTAL SEPARATION CANNOT BE MAINTAINED FROM EDGE OF PIPE DUE TO OTHER UTILITIES, ENCASE WATERLINE IN CLSM PER DETAIL 5, SHEET 02C300.

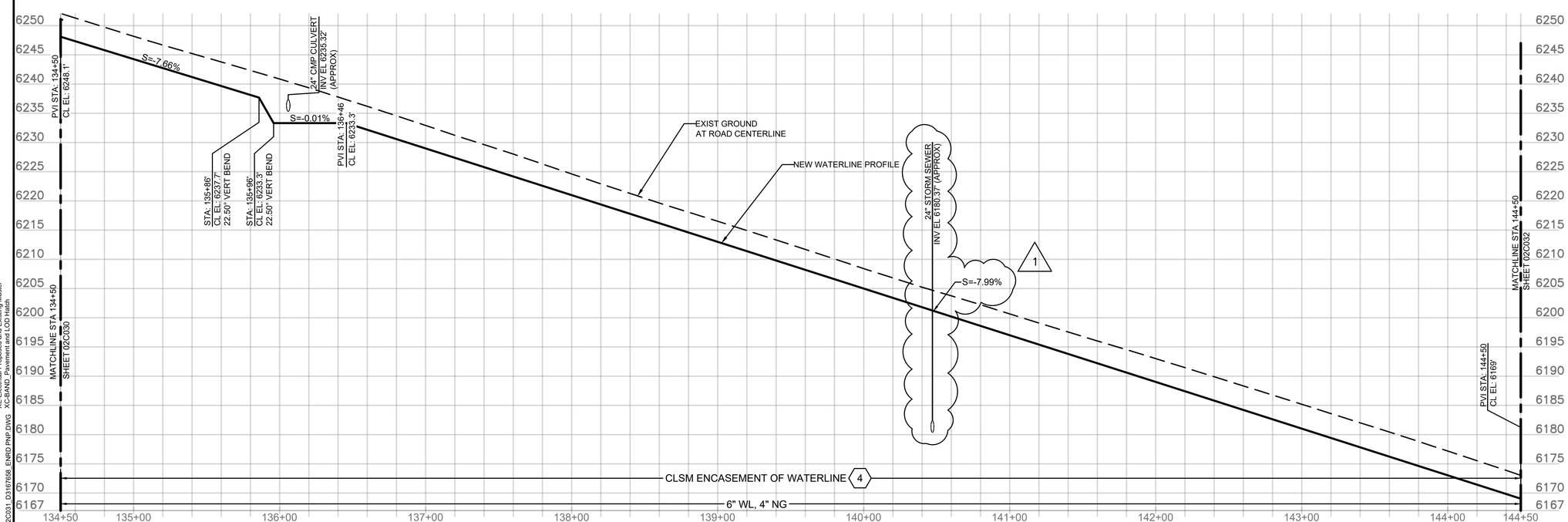


1 REVISED BY ADDENDUM NO. 1

FULL SIZE DRAWINGS = 22"x34" BAR MEASURES 1" LONG

0" 1"

HORIZONTAL: 40 0 40 80 — SCALE OF FEET — 1" = 40'

VERTICAL: 10 0 10 20 — SCALE OF FEET — 1" = 10'

MICAH E. JOHNSON — NEW MEXICO — 25223 — PROFESSIONAL ENGINEER

Digitally signed by Micah E. Johnson
Date: 2026.04.07 12:37:30-06'00'

| | | | |
|---|---|---|---|
| DESIGNED: M.COUTURE | SUB SHEET NO. | TITLE OF SHEET | DRAWING NO. 315 / 182751 |
| CADD J. FIGUEROA | 02C031 | CIVIL | PMIS/PKG NO. 266697 |
| TECH. REVIEW: M JOHNSON | | BL 'ENTRANCE ROAD' STA 134+50 TO 144+50 PLAN AND PROFILE | SHEET 58A OF 203 |
| DATE: 01/16/2026 | | BANDELIER NATIONAL MONUMENT | |

1/13/2026 12:05 PM FIGUEROAJ R24 02C031 D3167658 ENRD PNP.DWG XC-BAND Pavement and LOD Hatch
XC-Pavement Proposed and Existing Master
XC-ROADWAY
XC-UTILITY SITE
XC-BAND_BAND
XC-ALIGN_BAND
XC-BAND_PROFILE-Master
XC-BAND_PROFILES
XC-LAYOUT-SHEETS
XG-Border_BAND

CLIN 0001 - MAIN PARK WATER SYSTEM: CONTINUES FROM STA 154+25 TO STA 159+54. FOR DETAILS SEE SPECIFICATION 01 27 00.

CLIN OPTION N - NATURAL GAS SYSTEM: CONTINUES FROM STA 154+25 TO STA 159+54. FOR DETAILS SEE SPECIFICATION 01 27 00.

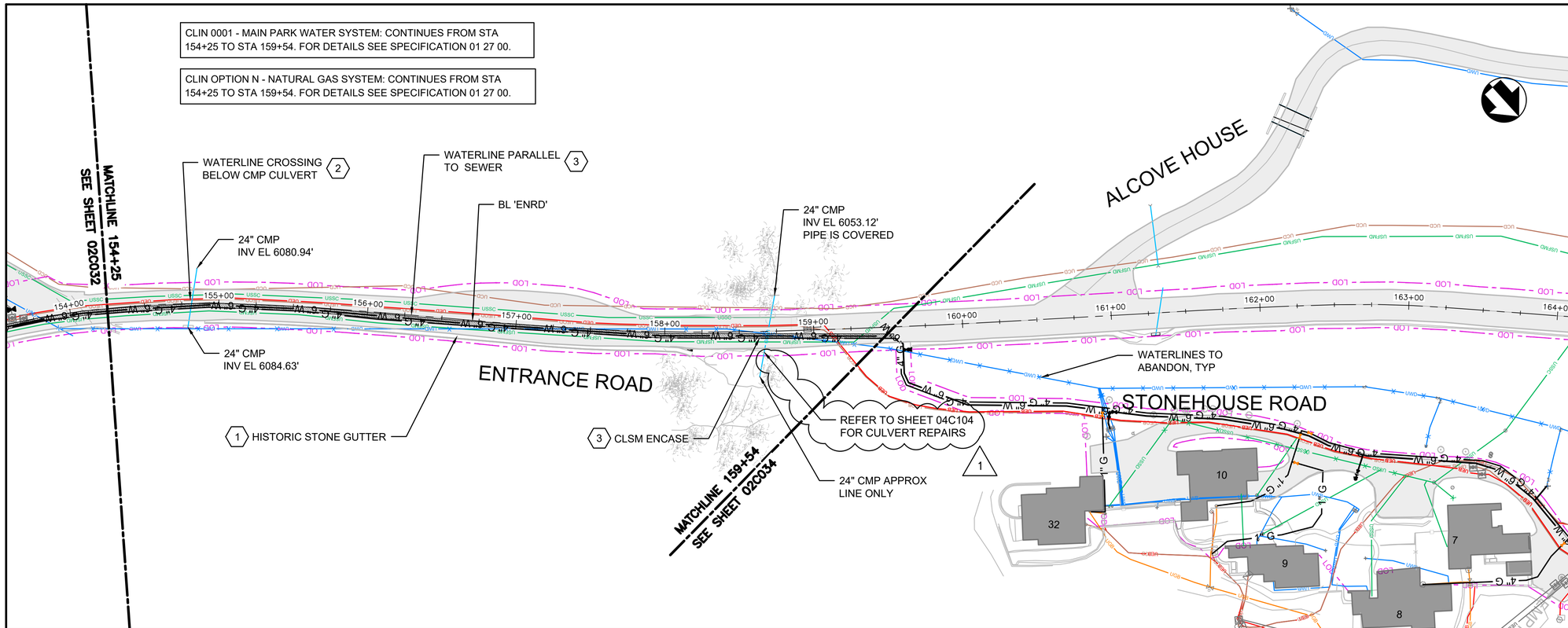


KEYPLAN

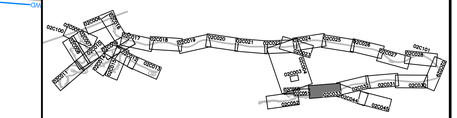

## SHEET KEYNOTES

1. PROTECT HISTORIC STONE GUTTER IN PLACE. SEE NOTES ON SHEET 00G003 AND SPECIFICATION SECTION 01 35 91.
2. INSTALL WATERLINE BELOW EXISTING CMP CULVERT WITH 18" MINIMUM VERTICAL CLEARANCE. NO JOINT IN THE WATERLINE SHALL BE INSTALLED BELOW CROSSING OF CMP. INSTALL OTHER UTILITIES (FC, NG, EC) ABOVE CMP CULVERT WITH 2' MINIMUM COVER. SUPPORT EXISTING CMP.
3. NEW WATERLINE PARALLEL TO EXISTING FORCE MAIN SEWER. WHERE 10-FT HORIZONTAL SEPARATION CANNOT BE MAINTAINED FROM EDGE OF PIPE DUE TO OTHER UTILITIES, ENCASE WATERLINE IN CLSM PER DETAIL 5, SHEET 02C300.

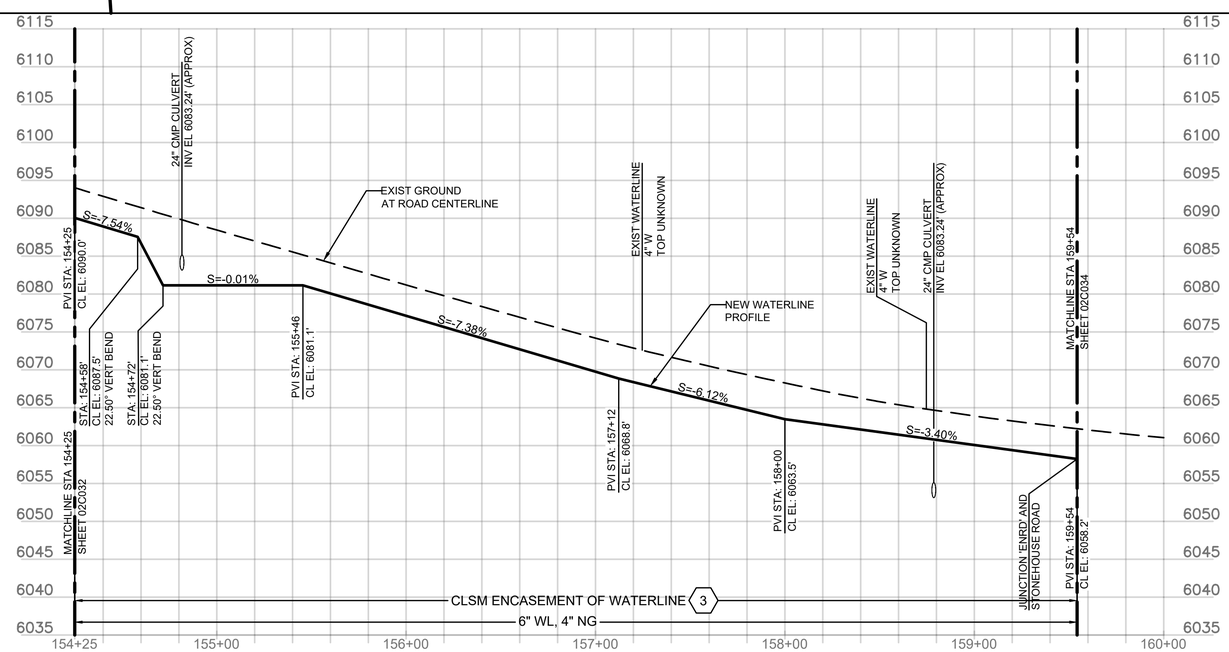


HORIZONTAL: 40 0 40 80 — SCALE OF FEET — 1" = 40'

VERTICAL: 10 0 10 20 — SCALE OF FEET — 1" = 10'

1 REVISED BY ADDENDUM NO. 1

FULL SIZE DRAWINGS = 22"x34" 0" 1"
BAR MEASURES 1" LONG

MICAH E. JOHNSON — NEW MEXICO — 25223 — PROFESSIONAL ENGINEER

Digitally signed by Micah E. Johnson
Date: 2026.04.07 12:38:02-06'00'

| | | | |
|---|---|---|---|
| DESIGNED: M.COUTURE | SUB SHEET NO. | TITLE OF SHEET | DRAWING NO. |
| CADD J. FIGUEROA | 02C033 | CIVIL | 315 |
| TECH. REVIEW: D. HUANG | | BL 'ENTRANCE ROAD' STA 154+25 TO 159+54 PLAN AND PROFILE | 182751 |
| DATE: 01/16/2026 | | BANDELIER NATIONAL MONUMENT | PMIS/PKG NO. 266697 |
| | | | SHEET 60A OF 203 |

XG-Border_BAND
XC-LAYOUT-SHEETS
XC-BAND PROFILES
XC-BAND_PROFILES-Master
XC-ALIGN_BAND
XE-Electrical Proposed and Existing Master
XC-UTILITY SITE
XC-CONTOURS_BAND
XC-BAND_Pavement and LOD Hatch

1/15/2026 4:52 PM FIGUEROAJ R24 02C033_D3167658_ENRD PNP.DWG

CLIN OPTION M - COTTONWOOD COMFORT STATION (BLDG #1) UTILITY CONNECTIONS: GRAVITY SEWER FROM COMFORT STATION TO MANHOLE MH-A6, INCLUDING CREEK CROSSING SUSPENDED FROM BRIDGE AND EXTENDING ELECTRICAL AND WATER UTILITIES SHOWN ON THIS DWG. SEE ALSO DWG 02S101. FOR DETAILS SEE SPECIFICATION 01 27 00.

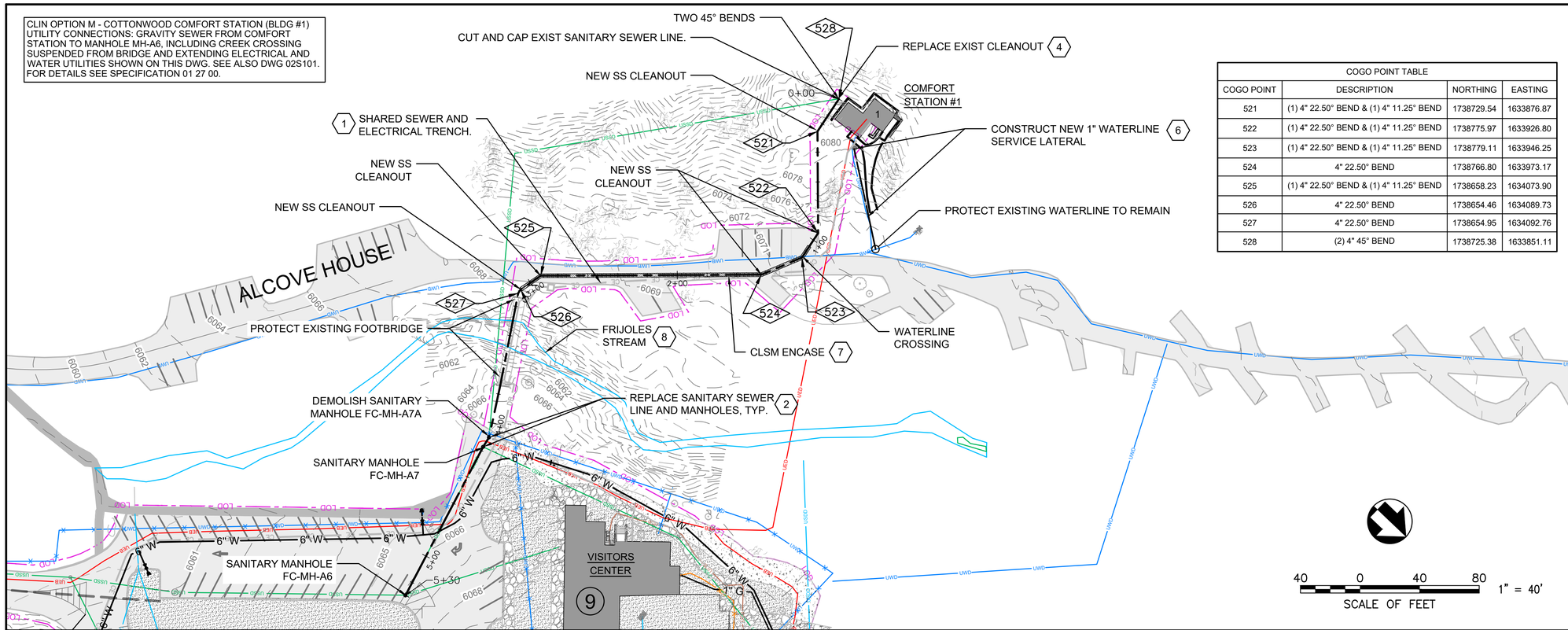


| COGO POINT TABLE | | | |
|---|---|---|---|
| COGO POINT | DESCRIPTION | NORTHING | EASTING |
| 521 | (1) 4" 22.50° BEND & (1) 4" 11.25° BEND | 1738729.54 | 1633876.87 |
| 522 | (1) 4" 22.50° BEND & (1) 4" 11.25° BEND | 1738775.97 | 1633926.80 |
| 523 | (1) 4" 22.50° BEND & (1) 4" 11.25° BEND | 1738779.11 | 1633946.25 |
| 524 | 4" 22.50° BEND | 1738766.80 | 1633973.17 |
| 525 | (1) 4" 22.50° BEND & (1) 4" 11.25° BEND | 1738658.23 | 1634073.90 |
| 526 | 4" 22.50° BEND | 1738654.46 | 1634089.73 |
| 527 | 4" 22.50° BEND | 1738654.95 | 1634092.76 |
| 528 | (2) 4" 45° BEND | 1738725.38 | 1633851.11 |

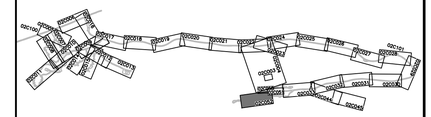

KEYPLAN

## SHEET KEYNOTES

1. SHARED UTILITY TRENCH CONTAINS SANITARY SEWER AND ELECTRICAL CONDUIT. SEE DRAWING 02E134 FOR ELECTRICAL
2. DEMOLISH SS MANHOLE FC-MH-A7A. REMOVE AND REPLACE SS MANHOLES FC-MH-A7. REMOVE AND REPLACE SS GRAVITY PIPELINES BETWEEN MANHOLES FC-MH-A6 AND FC-MH-A7. CONSTRUCT MANHOLES PER RIM AND INVERT ELEVATIONS SHOWN ON PROFILE VIEW.
3. TRANSITION SEWER LINE MATERIAL BETWEEN PVC AND STEEL PIPE 2 FT MIN. FROM BRIDGE ABUTMENT.
4. FIELD VERIFY EXIST CLEANOUT DIAMETER. IF GREATER THAN 4-INCH, INSTALL ECCENTRIC REDUCER TO NEW 4-INCH DIAMETER UPSTREAM OF NEW CLEANOUT.
5. SEE SHEETS 02C200 - 02C207 FOR SS LATERAL REPLACEMENTS.
6. CONSTRUCT NEW 1" WATERLINE SERVICE LATERAL PER DETAIL 4, SHEET 02C301 FROM EXISTING DISTRIBUTION LINE TO COMFORT STATION #1 VAULT (CURRENTLY OUT OF SERVICE). DEMOLISH EXIST FIRE HYDRANT AND VALVE.
7. NEW SEWER LATERAL PARALLEL TO EXISTING WATERLINE. ENCASE SEWER LATERAL IN CLSM PER DETAIL 5, SHEET 02C300.
8. PROTECT FRIJOLES STREAM IN PLACE. NO EQUIPMENT PERMITTED WITHIN STREAM BANKS.
9. CONTRACTOR MAY RAISE OR LOWER AERIAL SEWER LINE CROSSING UNDER BRIDGE UP TO +/-3" TO ACHIEVE PROPER MINIMUM SLOPE. ENSURE INVERT IN (W) INTO MANHOLE FC-MH-A7 IS MIN. 0.10' HIGHER THAN INVERT OUT (E).

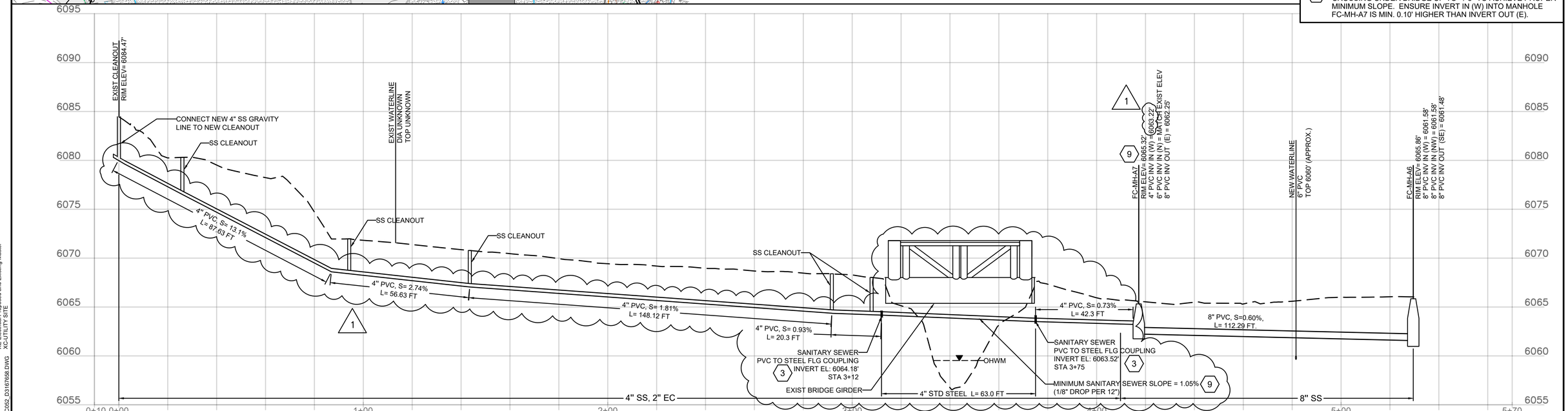


HORIZONTAL: 20 0 20 40 — SCALE OF FEET — 1" = 20'

VERTICAL: 5 0 5 10 — SCALE OF FEET — 1" = 5'

FULL SIZE DRAWINGS = 22"x34" 0" 1"
BAR MEASURES 1" LONG

1 REVISED BY ADDENDUM NO. 1

MICAH E. JOHNSON NEW MEXICO 25223 PROFESSIONAL ENGINEER

Digitally signed by Micah E. Johnson
Date: 2026.04.07 12:38:25-06'00'

| DESIGNED: | SUB SHEET NO. | TITLE OF SHEET | DRAWING NO. |
|---|---|---|---|
| M JOHNSON | 02C052 | CIVIL | 315 |
| CADD: J FIGUEROA | | COTTONWOOD (BLDG 1) COMFORT STATION SEWER PLAN AND PROFILE | 182751 |
| TECH. REVIEW: D. HUANG | | BANDELIER NATIONAL MONUMENT | PMIS/PKG NO. 266697 |
| DATE: 01/16/2026 | | | SHEET 73A OF 203 |

1/14/2026 2:04 PM FIGUEROAJ R24 02C052_D3167658.DWG

XG-Border_BAND
XC-LAYOUT-SHEETS
XC-BAND PROFILES
XC-BAND_TOPO-Master
XC-BAND_Vehicle-Master
XC-ROADWAY
XC-BAND_Pavement and LOD Hatch
XC-Existing-Proposed and Existing Master
XC-UTILITY SITE

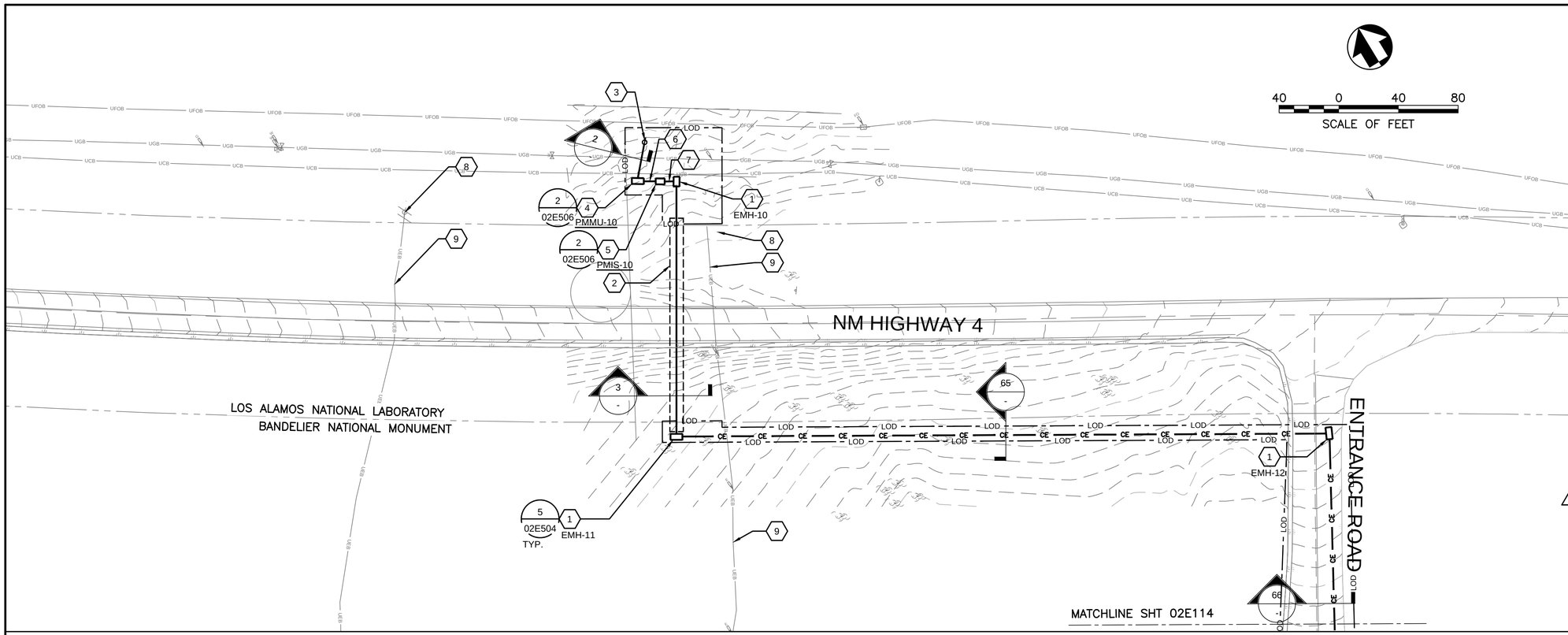


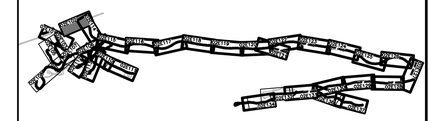

KEYPLAN

## GENERAL NOTES

1. REFER TO CIVIL DRAWINGS FOR CONSTRUCTION PHASING AND UTILITY CORRIDOR COORDINATION.
2. REFER TO GENERAL DRAWINGS FOR LEGENDS, NOTES, AND ABBREVIATIONS.

## # SHEET KEYNOTES

1. 4x8x4 MANHOLE.
2. SEE CIVIL DRAWING 02C006 FOR UTILITY ROAD CROSSING DETAILS.
3. NEW UTILITY POLE RISER, CONDUIT, AND SERVICE CONDUCTORS PROVIDE BY ELECTRICAL UTILITY.
4. PAD MOUNT PRIMARY METERING CABINET. COORDINATE WITH ELECTRICAL UTILITY FOR SPECIFIC SERVICE REQUIREMENTS. PROVIDE FIBERGLASS GROUND SLEEVE. (1)
5. PAD MOUNT PRIMARY SERVICE DISCONNECT SWITCH COORDINATE WITH ELECTRICAL UTILITY FOR SPECIFIC SERVICE REQUIREMENTS. PROVIDE FIBERGLASS GROUND SLEEVE.
6. PROVIDE TWO 5-INCH CONDUITS AND CONDUCTORS BETWEEN METERING CABINET AND SERVICE DISCONNECT SWITCH. SEE DUCT SECTION 3.
7. PROVIDE TWO 5-INCH CONDUITS AND CONDUCTORS BETWEEN SERVICE DISCONNECT SWITCH AND ELECTRICAL MANHOLE. SEE DUCT SECTION 3.
8. DEMOLISH EXISTING THREE PHASE PRIMARY SERVICE AND SINGLE PHASE SECONDARY SERVICE, POLES, AND OVERHEAD CONDUCTORS AFTER NEW PRIMARY SERVICE IS PROVIDED AND ACCEPTED BY CONTRACTING OFFICER.
9. DEMOLISH EXISTING CONDUCTORS WHERE INSTALLED IN BELOW GRADE CONDUIT. BELOW GRADE CONDUIT TO BE ABANDONED IN PLACE. ABANDON DIRECT BURIED CONDUCTORS AND CONDUCTORS NOT REMOVABLE FROM BELOW GRADE CONDUIT IN PLACE.

**DUCT BANK SCHEDULE**

| SECTION | START | END | DUCT ID | SIZE | CONDUCTOR/CABLE |
|---|---|---|---|---|---|
| 2 | RISER POLE | PMS-4 | 2A | 5" | BY LANL |
| | | | 2B | 5" | PULLSTRING |
| 3 | EMH-10 | EMH-11 | 3A | 5" | 3#4/0 15KV, 1#1/0G 600V |
| | | | 3B | 5" | PULLSTRING |
| 65 | EMH-11 | EMH-12 | 65A | 5" | 3#4/0 15KV, 1#1/0G 600V |
| | | | 65B | 5" | PULLSTRING |
| 66 | EMH-12 | EMH-13 | 66A | 5" | 3#4/0 15KV, 1#1/0G 600V |
| | | | 66B | 5" | PULLSTRING |

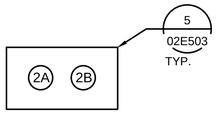


2 - DUCT SECTION
NOT TO SCALE

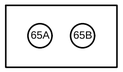


65 - DUCT SECTION
NOT TO SCALE

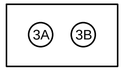


3 - DUCT SECTION
NOT TO SCALE

66 - DUCT SECTION
NOT TO SCALE

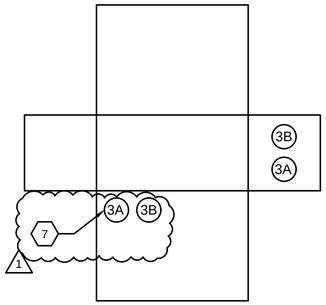


EMH-10
BUTTERFLY DIAGRAM
NOT TO SCALE

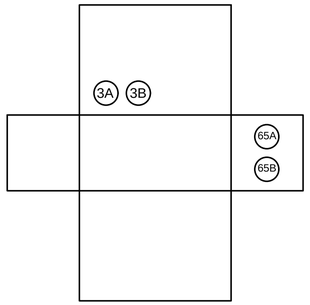


EMH-11
BUTTERFLY DIAGRAM
NOT TO SCALE

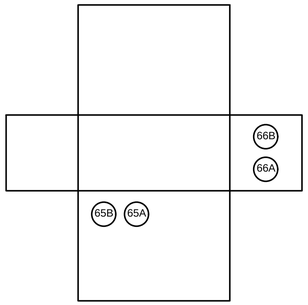


EMH-12
BUTTERFLY DIAGRAM
NOT TO SCALE

1 REVISED BY ADDENDUM NO. 1

FULL SIZE DRAWINGS = 22"x34" 0" 1"
BAR MEASURES 1" LONG

JONATHAN B. JAMES
NEW MEXICO
18614
PROFESSIONAL ENGINEER
DIGITALLY SIGNED: 01/07/2026

| | | | |
|---|---|---|---|
| DESIGNED: J. JAMES | SUB SHEET NO. | TITLE OF SHEET: ELECTRICAL | DRAWING NO. 315 |
| CADD: I. KHAN | 02E102 | PRIMARY DISTRIBUTION HWY 4 CROSSING 2 | 182751 |
| TECH. REVIEW: J. LANDMAN | | BANDELIER NATIONAL MONUMENT | PMIS/PKG NO. 266697 |
| DATE: 01/16/2026 | | | SHEET 101A OF 203 |

3/2/2026 5:19 PM ikhan1 R24 02E102 D3167558.DWG

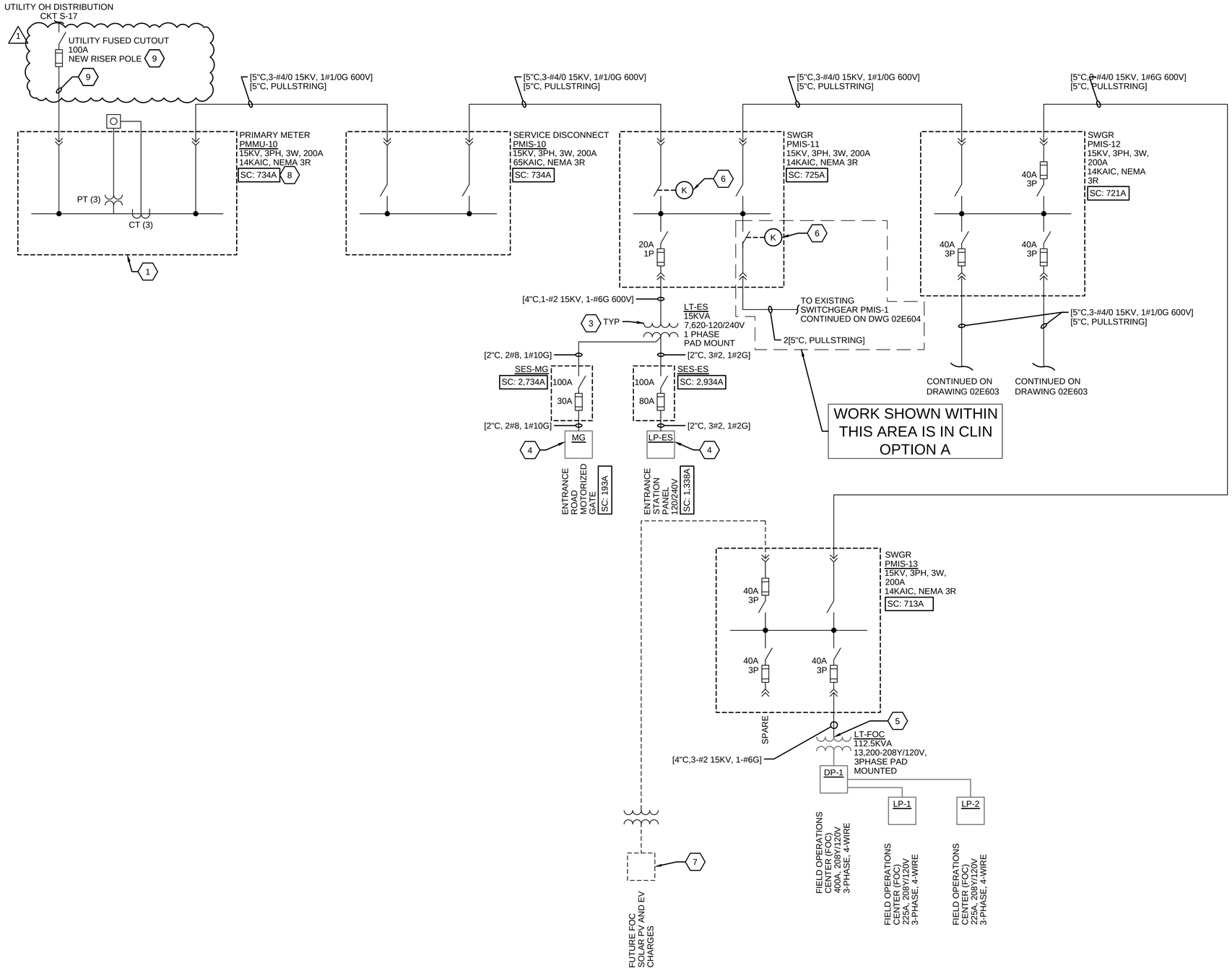


## MESA TOP AREA PRIMARY DISTRIBUTION ONE-LINE DIAGRAM 1

NTS

WORK SHOWN ON THIS DRAWING IS IN CLIN 0003 EXCEPT AS NOTED

1 REVISED BY ADDENDUM NO. 1

FULL SIZE DRAWINGS = 22"x34" 0" 1"
BAR MEASURES 1" LONG

## GENERAL NOTES

1. REFER TO CIVIL DRAWINGS FOR CONSTRUCTION PHASING AND UTILITY CORRIDOR COORDINATION.
2. REFER TO GENERAL DRAWINGS FOR LEGENDS, NOTES, AND ABBREVIATIONS.
3. INFORMATION PRESENTED IS BASED ON AVAILABLE RECORD DRAWINGS AND LIMITED, NON-INVASIVE FIELD OBSERVATIONS. VERIFY DATA BY QUALIFIED PERSONNEL.
4. INSTALLATION SHALL COMPLY WITH LANL ELECTRIC UTILITY, LOS ALAMOS COUNTY ELECTRICAL REQUIREMENTS, NATIONAL ELECTRICAL CODE (NFPA 70), AND NATIONAL ELECTRICAL SAFETY CODE (IEEE C2).

## # SHEET KEYNOTES

1. PAD MOUNT PRIMARY METERING CABINET SHALL BE PROVIDED IN ACCORDANCE WITH LAS ALAMOS COUNTY ELECTRICAL UTILITY AND LANL ELECTRICAL UTILITY REQUIREMENTS.
2. 200A, 15KV PAD-MOUNT THREE-PHASE SECTIONALIZING CABINET WITH FUSED LOAD-BREAK ELBOWS.
3. PAD MOUNT TRANSFORMERS SHALL INCLUDE PRIMARY FUSES.
4. RE-FEED EXISTING LOW-VOLTAGE ELECTRICAL EQUIPMENT.
5. RE-FEED EXISTING PAD-MOUNT TRANSFORMER.
6. PROVIDE KEY INTERLOCK ON SWITCH. KEY TO MATCH NEW INTERLOCKS ON PMS-1 ON DRAWING 02E604 FOR MAIN-TIE-TIE MAIN CONFIGURATION.
7. FUTURE CONDUIT, FEEDERS, EQUIPMENT, AND SERVICES IS NOT IN SCOPE.
8. CALCULATED SHORT CIRCUIT FAULT CURRENTS SHOWN ARE BASED ON EQUIPMENT AND CONDUCTORS SHOWN. CONTRACTOR TO PROVIDE FINAL SHORT CIRCUIT FAULT CURRENT CALCULATIONS PER SPECIFICATION 26 05 70.
9. SERVICE DUCT BANK, CONDUCTORS, CUTOUTS, RISER, AND POLE PROVIDED BY LANL ELECTRICAL UTILITY.

JONATHAN B. JAMES
NEW MEXICO
18614
PROFESSIONAL ENGINEER
DIGITALLY SIGNED: 04/07/2026

| | | | |
|---|---|---|---|
| DESIGNED: J. JAMES<br>CADD: I. KHAN<br>TECH. REVIEW: J. LANDMAN<br>DATE: 01/16/2026 | SUB SHEET NO. 02E602 | TITLE OF SHEET<br>ELECTRICAL<br>MESA TOP<br>PRIMARY DISTRIBUTION<br>ONE-LINE DIAGRAM 1<br>BANDELIER NATIONAL MONUMENT | DRAWING NO. 315 182751<br>PMIS/PKG NO. 266697<br>SHEET 136A OF 203 |

3/2/2026 5:20 PM ikhan1 R24 02E602_D3167640.DWG XG-Border_BAND

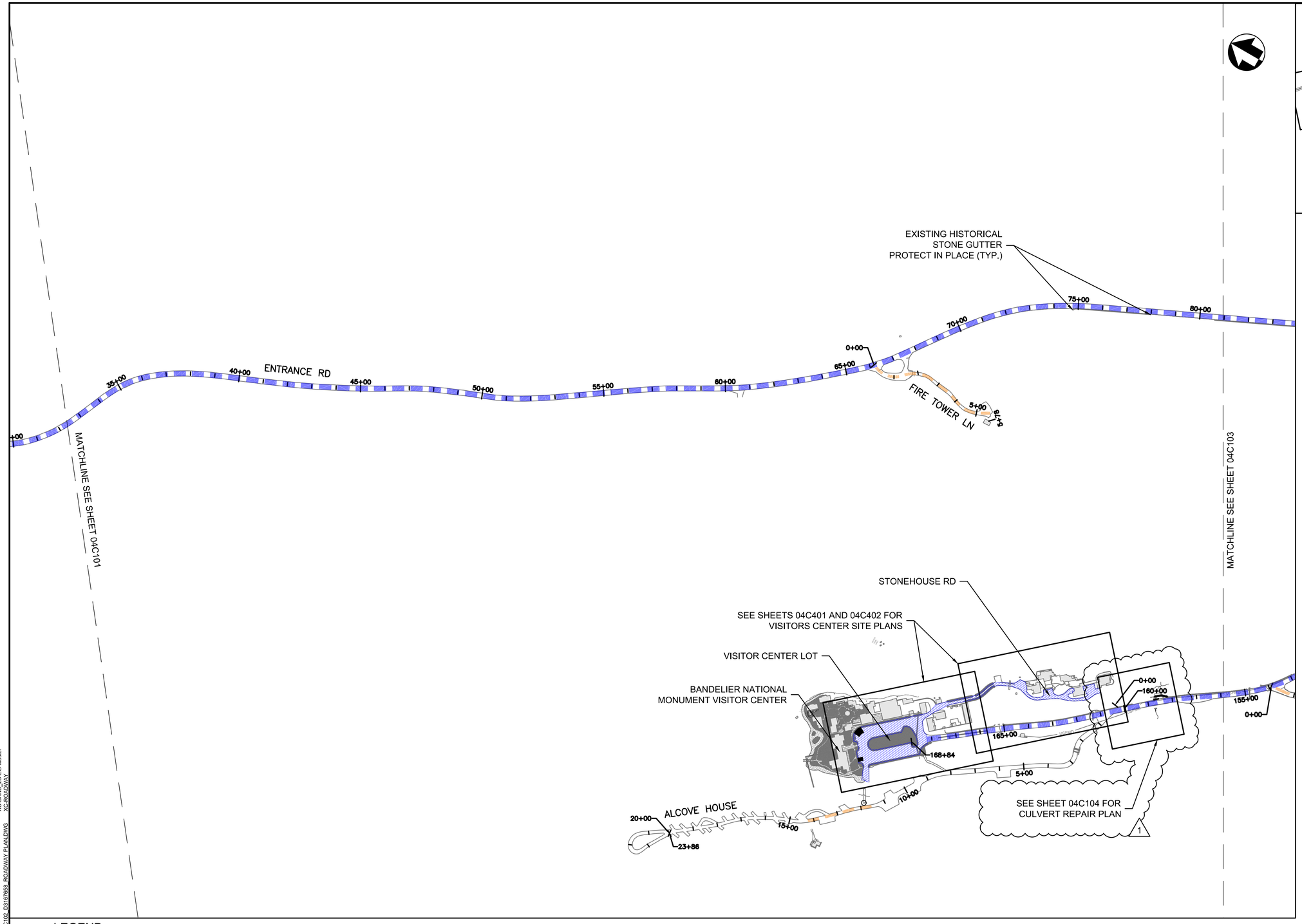


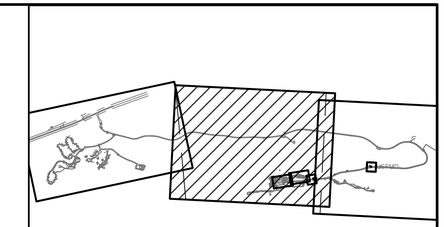

KEYPLAN

## NOTES

1. REFER TO SHEETS 04C301 TO 04C303 FOR TYPICAL SECTIONS.
2. REFER TO SHEETS 04C501 TO 04C503 FOR PAVEMENT MARKING DETAILS.
3. TIE IN AND PROVIDE A GRADUAL SMOOTH VERTICAL TRANSITION AT ALL INTERSECTING ROADS, DRIVEWAYS, PULLOUTS, AND CAMPGROUND SLIPS. TAPER THE TRANSITION OVER A MINIMUM HORIZONTAL DISTANCE OF 5'-0" WITH SLOPES AND GRADE BREAKS NOT TO EXCEED 10%.
4. ADJUST ALL EXISTING MANHOLE LIDS, AND VALVE COVERS TO MATCH THE FINISH GRADE OF THE NEW ASPHALT PAVEMENT SURFACE UNLESS THEY ARE TO BE ABANDONED AND/OR REMOVED AS PER THE UTILITY PLANS.
5. HISTORIC STONE RETAINING WALLS ALONG ROADS IN THE ENTIRETY OF THE PROJECT AREA ARE TO BE PROTECTED BY PLACEMENT OF PROTECTIVE VEHICULAR BARRIERS AND STYROFOAM BACKING IN AREAS OF ACTIVE CONSTRUCTION. REFER TO SPECIFICATION 01 35 91.
6. HISTORIC STONE GUTTER ALONG THE ENTIRETY OF THE PROJECT AREA IS TO BE PROTECTED IN AREAS OF ACTIVE CONSTRUCTION. REFER TO SPECIFICATION 01 35 91.

## LEGEND

- REMOVE & REPLACE
- PULVERIZE PAVEMENT
- TRENCH PATCHING
- REMOVE & REPLACE

FULL SIZE DRAWINGS = 22"x34" BAR MEASURES 1" LONG

0" 1"

200 0 200 400
SCALE OF FEET

1 REVISED BY ADDENDUM NO. 1

JAMES MILLS
NEW MEXICO
29711
PROFESSIONAL ENGINEER

James Mills
2026.04.07
10:12:48-06'00'

| | | | |
|---|---|---|---|
| DESIGNED: C. MEYER | SUB SHEET NO. | TITLE OF SHEET | DRAWING NO. |
| CADD C. MEYER | 04C102 | CIVIL ROADWAY PLAN | 315 182751 |
| TECH. REVIEW: J. MILLS | | | PMIS/PKG NO. 266697 |
| DATE: 01/16/2026 | | BANDELIER NATIONAL MONUMENT | SHEET 145A OF 203 |

1/14/2026 1:13 PM DUDLEYMJR24 04C102_D3187658_ROADWAY PLAN.DWG
XC-Border_BAND
XC-LAYOUT-SHEETS
XC-BAND PROFILES
XC-BAND_2D-EG-Master
XC-ROADWAY

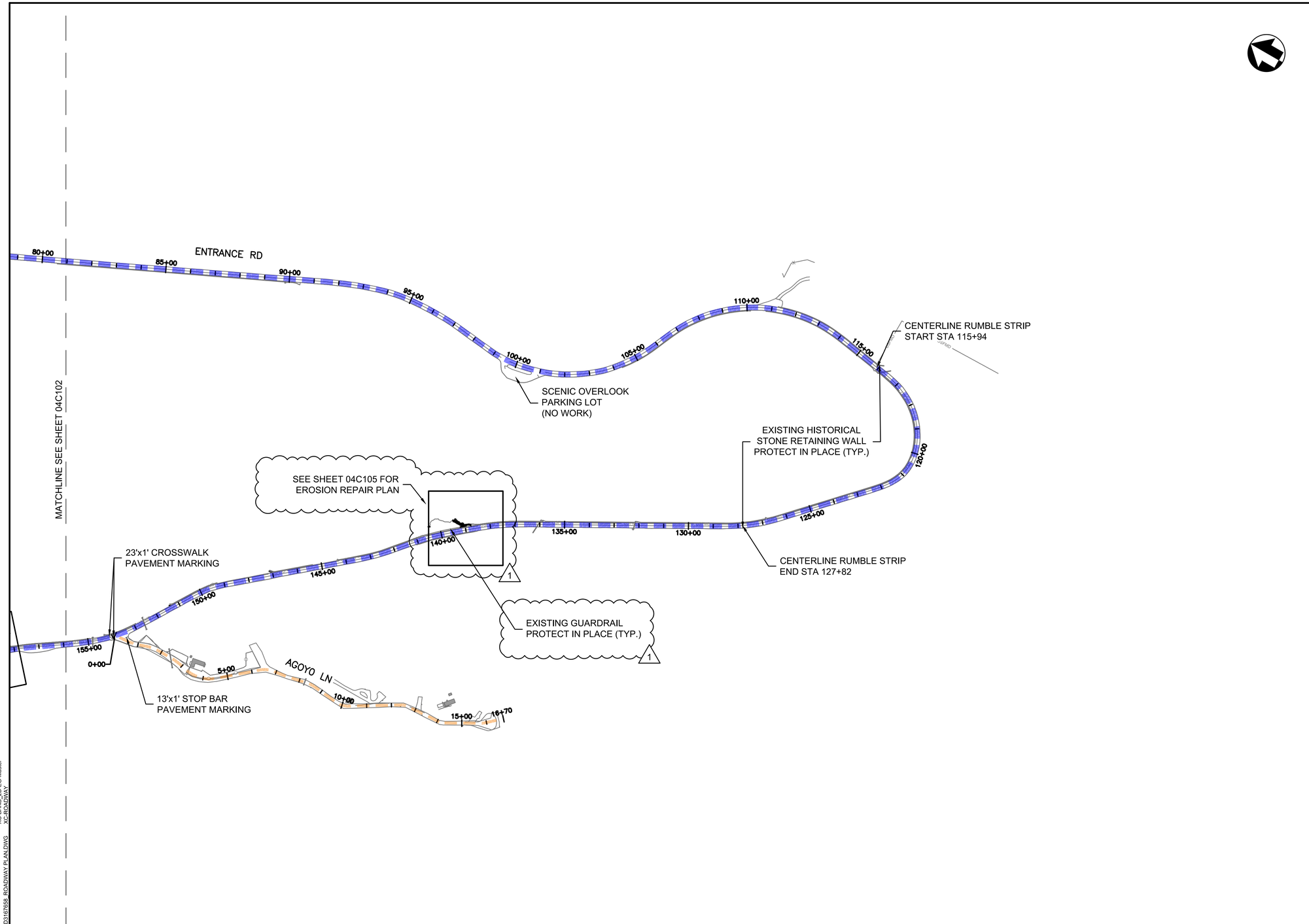


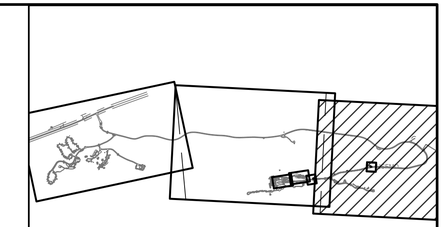

KEYPLAN

## NOTES

1. REFER TO SHEETS 04C301 TO 04C303 FOR TYPICAL SECTIONS.
2. REFER TO SHEETS 04C501 TO 04C503 FOR PAVEMENT MARKING DETAILS.
3. TIE IN AND PROVIDE A GRADUAL SMOOTH VERTICAL TRANSITION AT ALL INTERSECTING ROADS, DRIVEWAYS, PULLOUTS, AND CAMPGROUND SLIPS. TAPER THE TRANSITION OVER A MINIMUM HORIZONTAL DISTANCE OF 5'-0" WITH SLOPES AND GRADE BREAKS NOT TO EXCEED 10%.
4. ADJUST ALL EXISTING MANHOLE LIDS, AND VALVE COVERS TO MATCH THE FINISH GRADE OF THE NEW ASPHALT PAVEMENT SURFACE UNLESS THEY ARE TO BE ABANDONED AND/OR REMOVED AS PER THE UTILITY PLANS.
5. HISTORIC STONE RETAINING WALLS ALONG ROADS IN THE ENTIRETY OF THE PROJECT AREA ARE TO BE PROTECTED BY PLACEMENT OF PROTECTIVE VEHICULAR BARRIERS AND STYROFOAM BACKING IN AREAS OF ACTIVE CONSTRUCTION. REFER TO SPECIFICATION 01 35 91.
6. HISTORIC STONE GUTTER ALONG THE ENTIRETY OF THE PROJECT AREA IS TO BE PROTECTED IN AREAS OF ACTIVE CONSTRUCTION. REFER TO SPECIFICATION 01 35 91.

## LEGEND

- REMOVE & REPLACE
- PULVERIZE PAVEMENT
- TRENCH PATCHING

FULL SIZE DRAWINGS = 22"x34" 0" 1"
BAR MEASURES 1" LONG

200 0 200 400
SCALE OF FEET

1 REVISED BY ADDENDUM NO. 1

JAMES MILLS NEW MEXICO 29711 PROFESSIONAL ENGINEER
James Mills
2026.04.07
10:13:08-06'00'

| DESIGNED: C. MEYER | SUB SHEET NO. | TITLE OF SHEET | DRAWING NO. |
|---|---|---|---|
| CADD C. MEYER | 04C103 | CIVIL ROADWAY PLAN | 315 / 182751 |
| TECH. REVIEW: J. MILLS | | | PMIS/PKG NO. 266697 |
| DATE: 01/16/2026 | | BANDELIER NATIONAL MONUMENT | SHEET 146A OF 203 |

1/14/2026 1:13 PM DUDLEYMJ/p24_04C103_D3167658_ROADWAY PLAN.DWG
XG-Border_BAND
XC-LAYOUT-SHEETS
XC-BAND PROFILES
XC-BAND_2D-EG-Master
XC-ROADWAY

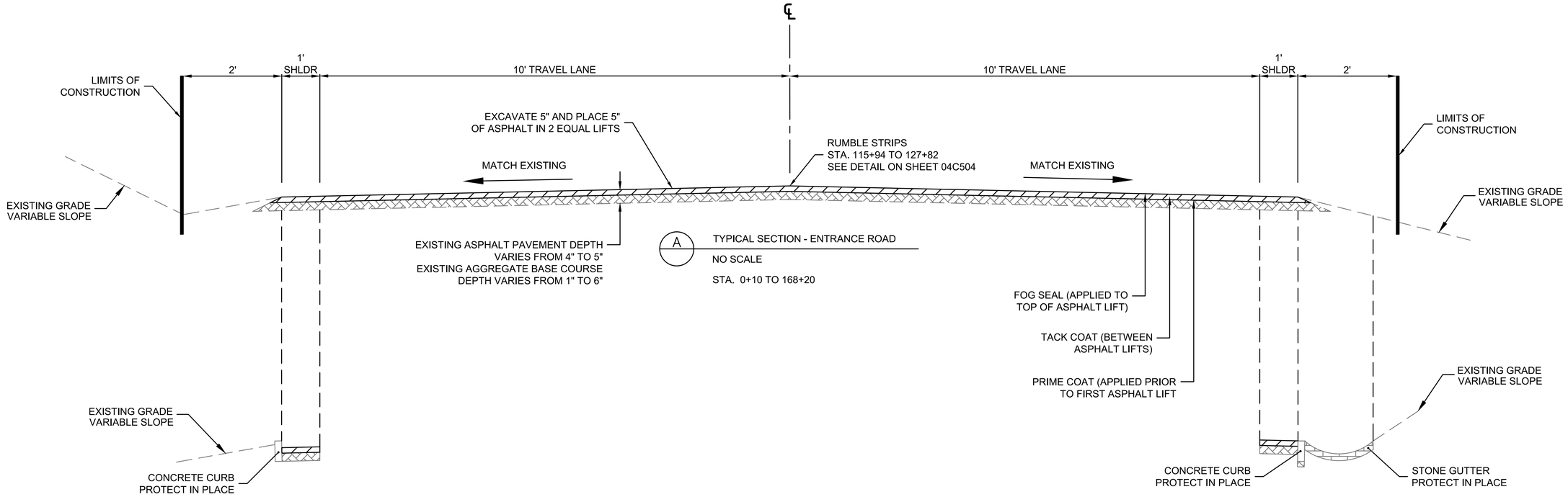


A — TYPICAL SECTION - ENTRANCE ROAD

NO SCALE

STA. 0+10 TO 168+20

B — EXISTING CONCRETE CURB - PROTECT IN PLACE

NO SCALE

STA. 3+24 TO 4+28, RT
STA. 3+41 TO 4+14, LT
STA. 138+60 TO 141+10, LT
STA. 147+30 TO 149+70, LT
STA. 156+35 TO 157+88, LT

C — EXISTING HISTORICAL STONE GUTTER - PROTECT IN PLACE

NO SCALE

STA. 74+81 TO 78+03, RT
STA. 80+66 TO 90+48, RT
STA. 104+36 TO 110+18, RT
STA. 110+80 TO 138+78, RT
STA. 111+27 TO 115+98, LT
STA. 140+99 TO 144+40, RT
STA. 145+40 TO 147+16, RT
STA. 149+31 TO 151+41, RT
STA. 152+95 TO 154+37, RT
STA. 154+94 TO 158+22, RT
STA. 159+68 TO 165+09, RT
STA. 165+39 TO 167+28, RT

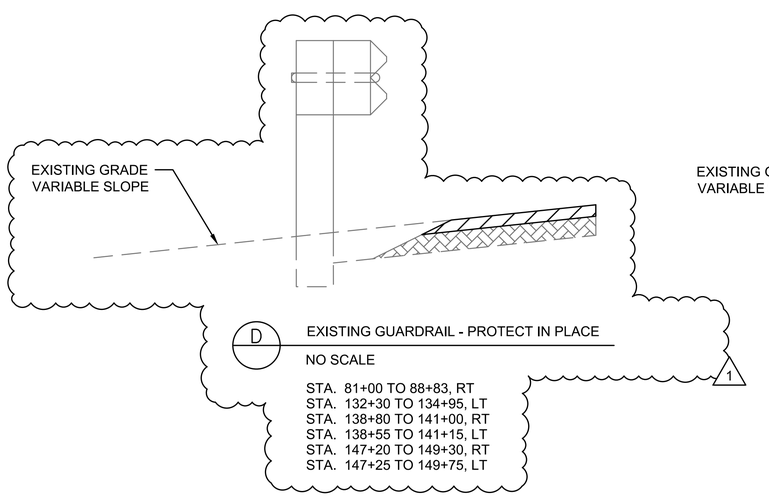


D — EXISTING GUARDRAIL - PROTECT IN PLACE

NO SCALE

STA. 81+00 TO 88+83, RT
STA. 132+30 TO 134+95, LT
STA. 138+80 TO 141+00, RT
STA. 138+55 TO 141+15, LT
STA. 147+20 TO 149+30, RT
STA. 147+25 TO 149+75, LT

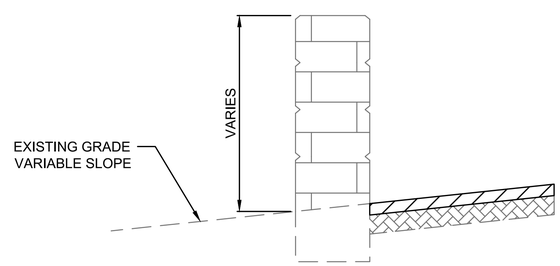


E — EXISTING HISTORICAL STONE RETAINING WALL - PROTECT IN PLACE

NO SCALE

STA. 115+98 TO 127+80, LT

FULL SIZE DRAWINGS = 22"x34" 0" 1"
BAR MEASURES 1" LONG

1 REVISED BY ADDENDUM NO. 1

JAMES MILLS NEW MEXICO 29711 PROFESSIONAL ENGINEER

James Mills 2026.04.07 10:13:25-06'00'

| DESIGNED: C. MEYER | SUB SHEET NO. | TITLE OF SHEET | DRAWING NO. |
|---|---|---|---|
| CADD C. MEYER | 04C302 | CIVIL ENTRANCE ROAD TYPICAL SECTION | 315 182751 |
| TECH. REVIEW: J. MILLS | | | PMIS/PKG NO. 266697 |
| DATE: 01/16/2026 | | BANDELIER NATIONAL MONUMENT | SHEET 148A OF 203 |

XC-Border_8AND
XC-BAND_2D-EG-Master
XC-ALIGN BAND
XC-GBS STRUCTURES
XC-GBS-00V04

1/14/2026 1:14 PM DUDLEYM1R24_04C302_D3167658_TYPICAL_SECTIONS.DWG

NOTES:

1. CENTER WHEELSTOPS BETWEEN AND PERPENDICULAR TO STALL LINES.
2. VARIATIONS IN WHEELSTOPS WILL BE ALLOWED TO MEET MANUFACTURER'S STANDARDS WITH THE APPROVAL OF THE CO.
3. PIN THE WHEELSTOPS WITH NO. 6 REINFORCING STEEL OR ¾-INCH STEEL RODS 2-FEET IN LENGTH.
4. EXTEND THE REINFORCING STEEL TO WITHIN 1 INCH OF ENDS OF WHEELSTOP.

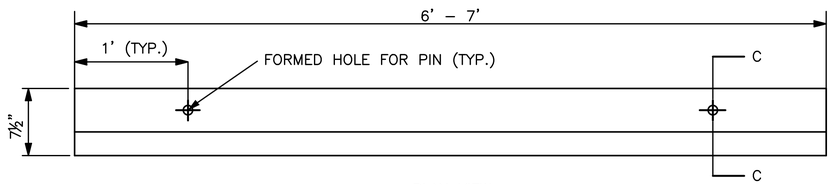


PLAN VIEW

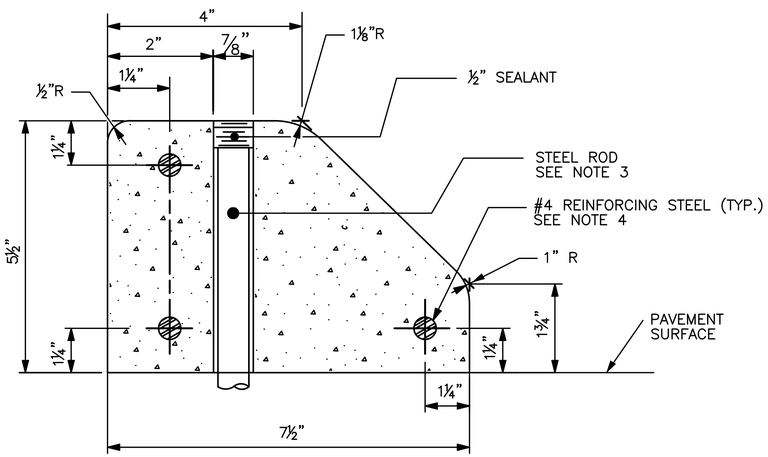


SECTION C–C

A CONCRETE WHEELSTOP
NO SCALE

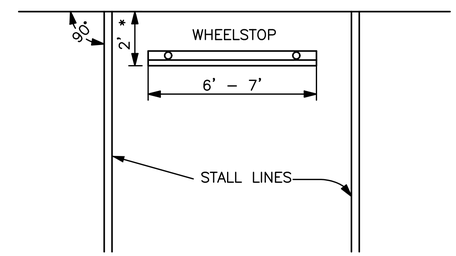


HEAD–ON PARKING

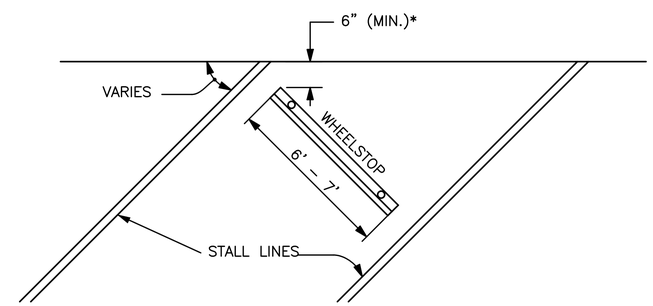


ANGULAR PARKING

* INCREASE DISTANCE FOR WALL OR OTHER OBSTRUCTIONS AS DIRECTED BY THE CO.

B WHEELSTOP LAYOUT
NO SCALE

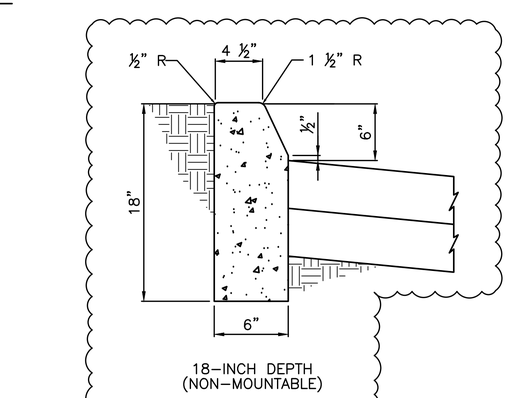


18–INCH DEPTH
(NON–MOUNTABLE)

C 18–INCH CONCRETE CURB
NO SCALE

1

FULL SIZE DRAWINGS = 22"x34" 0" 1"
BAR MEASURES 1" LONG

1 REVISED BY ADDENDUM NO. 1

JAMES MILLS NEW MEXICO 29711 PROFESSIONAL ENGINEER

James Mills
2026.04.07
10:13:48-06'00'

| DESIGNED: C. MEYER | SUB SHEET NO. | TITLE OF SHEET | DRAWING NO. |
|---|---|---|---|
| CADD C. MEYER | 04C511 | CIVIL<br>CONCRETE WHEELSTOP AND CONCRETE CURB DETAIL<br>BANDELIER NATIONAL MONUMENT | 315<br>182751 |
| TECH. REVIEW: J. MILLS | | | PMIS/PKG NO. 266697 |
| DATE: 01/16/2026 | | | SHEET 163A OF 203 |

XG-Border_BAND
XC-BAND_20-EG-Master
1/14/2026 1:14 PM DUDLEYMJ R24 04C511_D3167658_ROADWAY DETAILS.DWG XC-ROADWAY

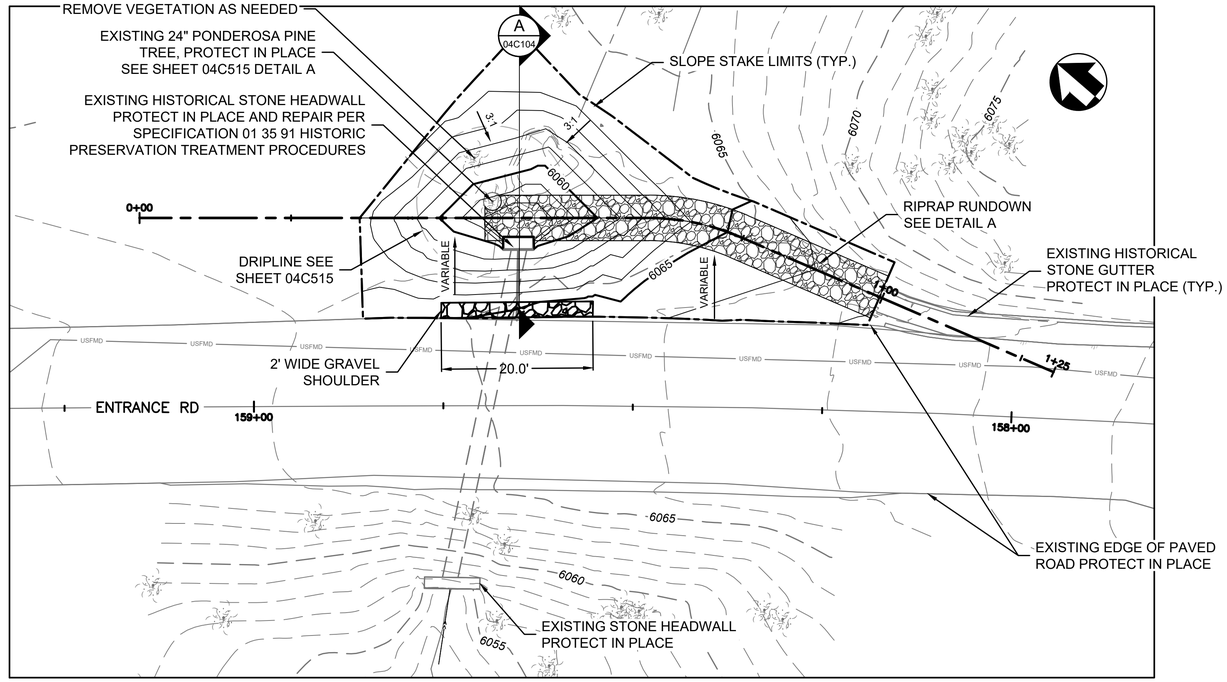


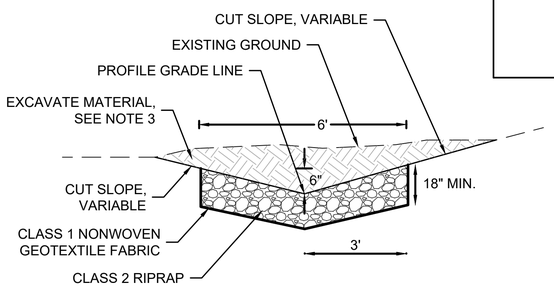


A RIP RAP RUNDOWN DETAIL

NO SCALE

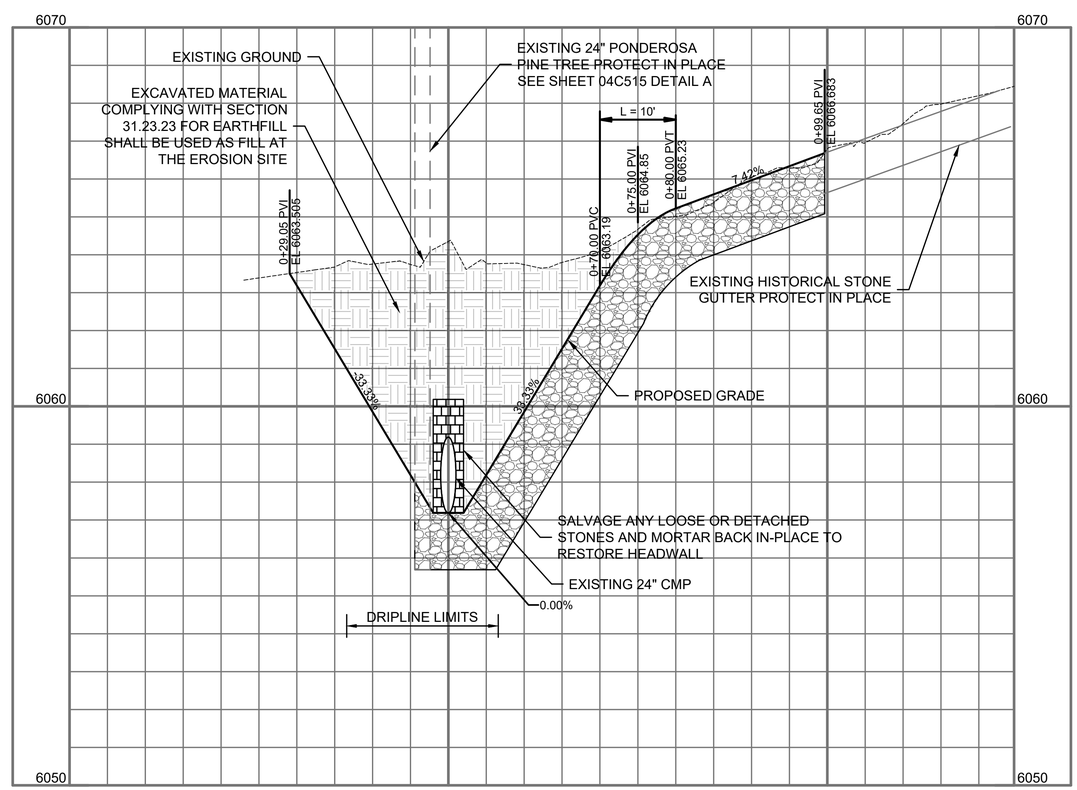


FULL SIZE DRAWINGS = 22"x34" 0" 1"
BAR MEASURES 1" LONG

1 NEW SHEET BY ADDENDUM NO. 1

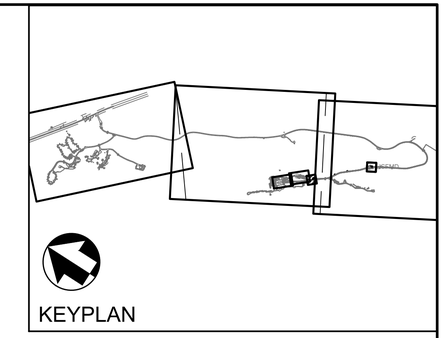


## NOTES:

1. THE NPS HAS COMPLETED SOME EXCAVATION OF THE SITE TO LOCATE THE EXISTING STONE HEADWALL SINCE THIS TOPOGRAPHY WAS SURVEYED. EXISTING MATERIALS HAVE BEEN SHIFTED SLIGHTLY BUT THE TOTAL EXCAVATION OF MATERIALS REQUIRED REMAINS THE SAME.
2. PHOTOGRAPH THE EXISTING 24" PONDEROSA PINE TREE AND THE HISTORICAL STONE HEADWALL AND STONE GUTTER PRIOR TO CONSTRUCTION ACTIVITIES TO PROVIDE A RECORD OF THE EXISTING CONDITIONS.
3. EARTHFILL REMOVED FROM EXCAVATING THIS SITE MAY BE USED AS FILL AT THE EROSION REPAIR SITE AS NOTED ON SHEET 04C105.
4. PROVIDE A MINIMUM 2-FOOT GRAVEL SHOULDER AT A 6:1 SLOPE ALONG THE EDGE OF THE PAVED ROAD AND GRADE TO MEET THE TOP OF THE STONE HEADWALL AND THE CULVERT INVERT. USE BASE COURSE MATERIAL AS PER SPECIFICATION SECTION 32 11 23 AGGREGATE BASE COURSE.
5. REVEGETATION OF THE SITE WILL BE DONE BY NPS.
6. INSTALL BIODEGRADABLE EROSION CONTROL MATS ON ALL DISTURBED AREAS WHERE SLOPES ARE 3:1 AND STEEPER AS PER SPECIFICATION SECTION 32 91 13 SOIL PREPARATION.

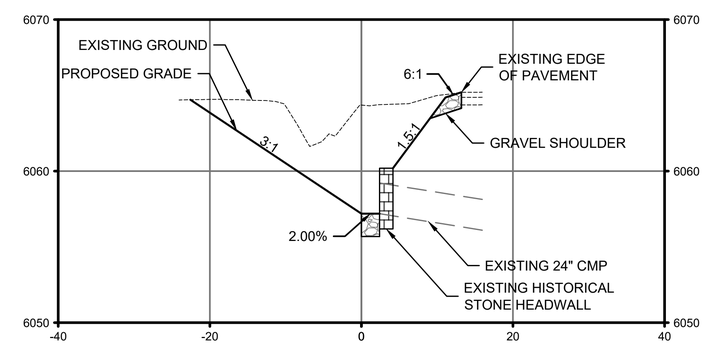


A 04C104 CULVERT SECTION

5 0 5 10 — SCALE OF FEET — 1" = 5' SECTION VERTICAL

2 0 2 4 — SCALE OF FEET — 1" = 2' PROFILE VERTICAL

10 0 10 20 — SCALE OF FEET — 1" = 10' HORIZONTAL

JAMES MILLS NEW MEXICO 29711 PROFESSIONAL ENGINEER

James Mills
2026.04.07
10:14:06-06'00'

| DESIGNED: C. MEYER | SUB SHEET NO. | TITLE OF SHEET | DRAWING NO. |
|---|---|---|---|
| CADD C. MEYER | 04C104 | CIVIL CULVERT REPAIR PLAN | 315 / 182751 |
| TECH. REVIEW: J. MILLS | | | PMIS/PKG NO. 266697 |
| DATE: 01/16/2026 | | BANDELIER NATIONAL MONUMENT | SHEET 204 OF 203 |

1/14/2026 1:37 PM DUDLEYMJ p24_04C104_03167658_CULVERT REPAIR PLAN.DWG
XC-Border_BAND
XC-LAYOUT-SHEETS
XC-BAND PROFILES
XC-BAND_2D-EG-Master
XC-BAND_2D-Proposed
03167658-MOD7 Grading

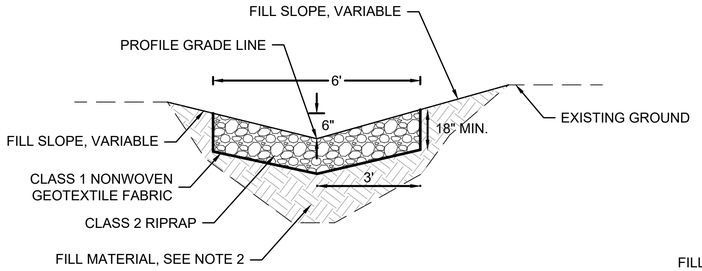


A RIP RAP RUNDOWN DETAIL
NO SCALE

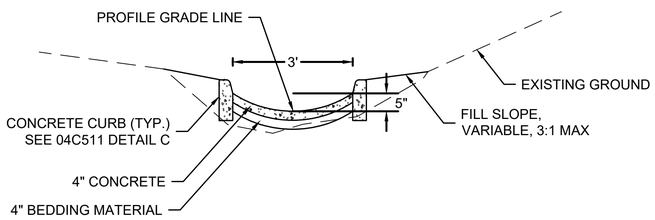


B CONCRETE CHANNEL DETAIL
NO SCALE

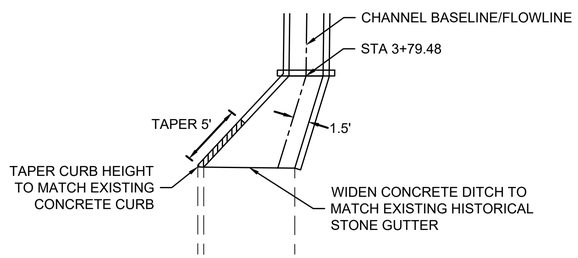


C CONCRETE CHANNEL WIDENING DETAIL
NO SCALE

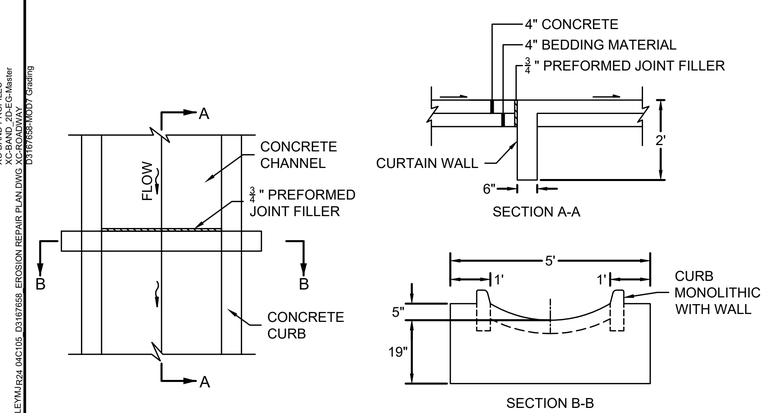


D CURTAIN WALL DETAILS
NO SCALE

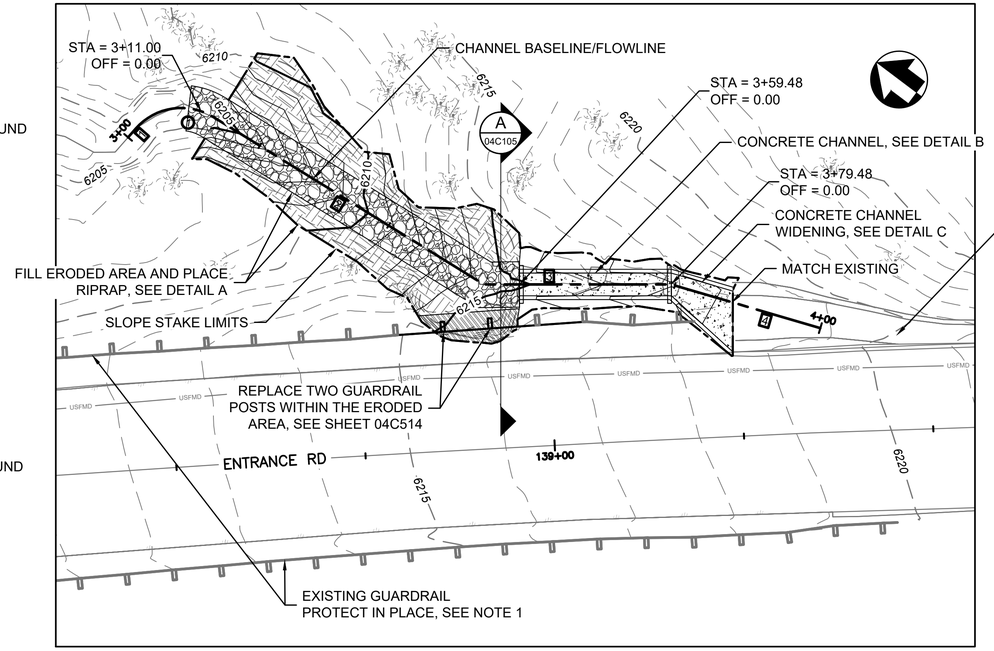


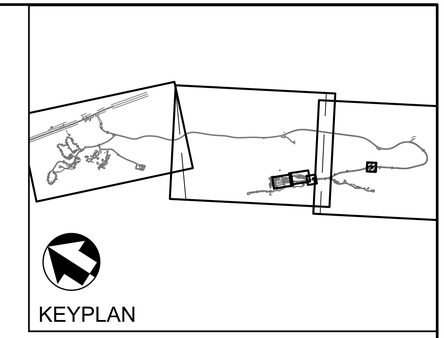


## NOTES

1. REPLACE DAMAGED OR MISSING GUARDRAIL BLOCKOUTS AS DIRECTED BY THE CO, NOT TO EXCEED 5 BLOCKOUTS. SEE SHEET 04C514 FOR DETAILS.
2. EARTHFILL EXCAVATED FROM THE CULVERT REHABILITATION AREA MAY BE USED AS FILL AT THIS LOCATION EXCEPT WITHIN THE INFLUENCE AREA OF THE ROADWAY. PROVIDE GRANULAR FILL FOR THE ROADWAY INFLUENCE AREA AND WHERE THE GUARDRAIL POSTS ARE BEING INSTALLED IN ACCORDANCE WITH SECTION 31.23.23. SEE SHEET 04C104 FOR ADDITIONAL DETAILS.
3. REPLACE TWO GUARDRAIL POSTS WITH NEW WOOD POSTS MATCHING THE EXISTING POSTS. EXISTING W-BEAM RAIL SECTIONS SHALL BE REMOVED AND REPLACED AS NEEDED TO INSTALL THE COMPACTED FILL AND INSTALL THE TWO POSTS. INSTALL NEW HARDWARE MATCHING THE EXISTING HARDWARE. SEE SHEET 04C514
6. INSTALL BIODEGRADABLE EROSION CONTROL MATS ON ALL DISTURBED AREAS WHERE SLOPES ARE 3:1 AND STEEPER AS PER SPECIFICATION SECTION 32 91 13 SOIL PREPARATION

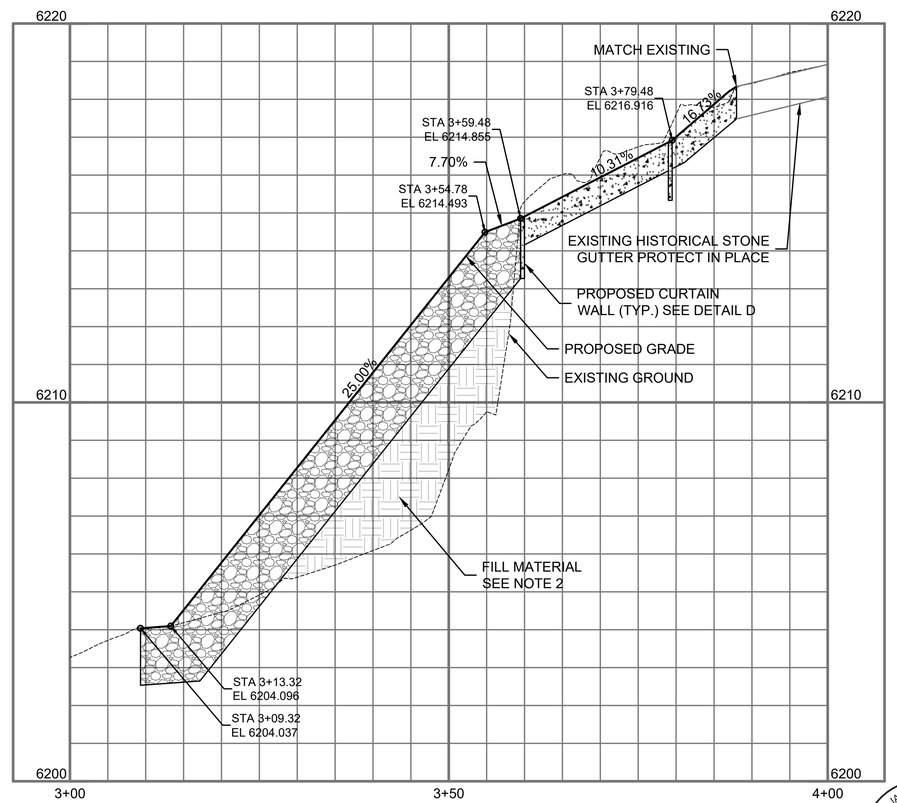


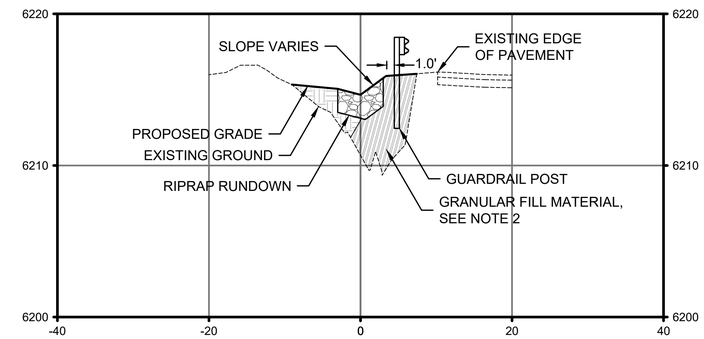


A 04C105 GUARDRAIL SECTION

| LINE DATA | | | | |
|---|---|---|---|---|
| No. | L (FT.) | BEARING | END POINT (N,E) | END POINT (N,E) |
| 1 | 1.56 | S85° 42'E | 1636416.77,1736509.46 | 1636418.33,1736509.35 |
| 2 | 41.99 | S05° 18'E | 1636425.69,1736502.11 | 1636429.57,1736460.29 |
| 3 | 24.70 | S37° 02'E | 1636429.57,1736460.29 | 1636444.45,1736440.58 |
| 4 | 20.52 | S20° 43'E | 1636444.45,1736440.58 | 1636451.71,1736421.38 |

| CURVE DATA | | | | |
|---|---|---|---|---|
| No. | R (FT.) | △ | T (FT.) | L (FT.) |
| 1 | 8.00 | 080°23'50" | 6.76 | 11.23 |

2 0 2 4
SCALE OF FEET
1" = 2' VERTICAL

10 0 10 20
SCALE OF FEET
1" = 10' HORIZONTAL

FULL SIZE DRAWINGS = 22"x34" 0" 1"
BAR MEASURES 1" LONG

1 NEW SHEET BY ADDENDUM NO. 1

JAMES MILLS NEW MEXICO 29711 PROFESSIONAL ENGINEER
James Mills
2026.04.07
10:14:26-06'00'

| DESIGNED: C. MEYER | SUB SHEET NO. | TITLE OF SHEET | DRAWING NO. |
|---|---|---|---|
| CADD C. MEYER | 04C105 | CIVIL EROSION REPAIR PLAN | 315 / 182751 |
| TECH. REVIEW: J. MILLS | | | PMIS/PKG NO. 266697 |
| DATE: 01/16/2026 | | BANDELIER NATIONAL MONUMENT | SHEET 205 OF 203 |

XG-Border_BAND
XC-LAYOUT-SHEETS
XC-BAND PROFILES
XC-BAND_2D-EG-Master
XC-BOUNDARY
03167658_MD07 Grading
1/14/2026 1:37 PM DUDLEYMJ/cpx 04C105, 03167658, EROSION REPAIR PLAN.DWG

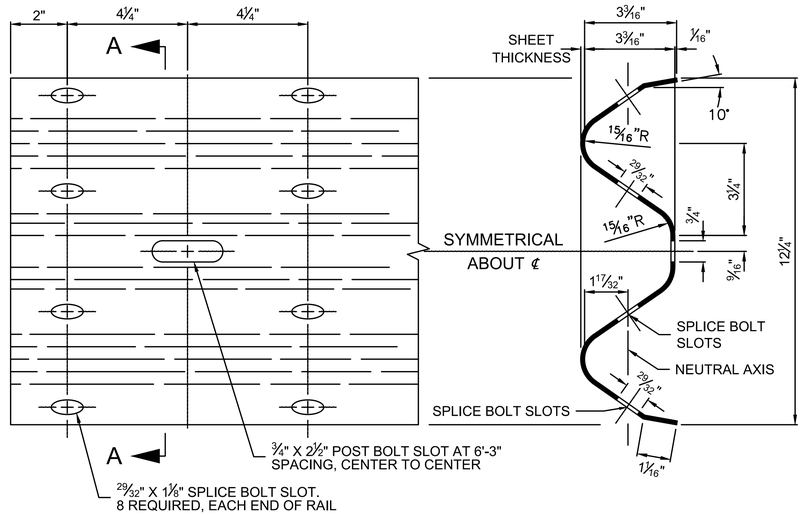


RAIL ELEVATION

SECTION A-A

W BEAM RAIL

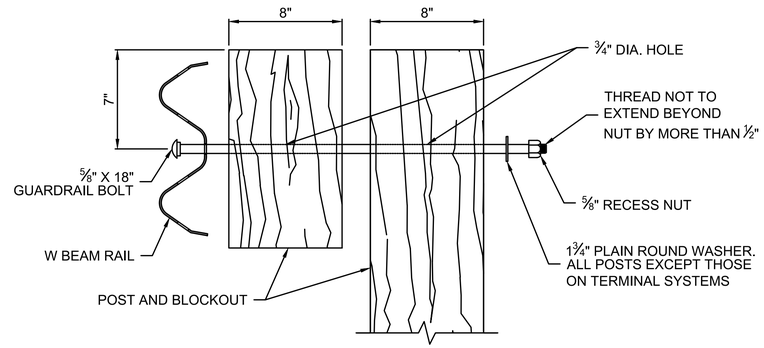


POST BOLT ASSEMBLY

## NOTES:

1. DIMENSIONAL TOLERANCES NOT SHOWN OR IMPLIED ARE INTENDED TO BE THOSE CONSISTENT WITH THE PROPER FUNCTIONING OF THE PART, INCLUDING ITS APPEARANCE, AND ACCEPTED MANUFACTURING PRACTICES.
2. CORED HOLES ARE FOR GUARDRAIL TERMINAL SECTION AND ARE DIMENSIONED TO MATCH EXISTING POSTS MEASURED AT BANDELIER NATIONAL MONUMENT.
3. REMOVE AND REINSTALL W-BEAM RAIL SECTIONS AS NEEDED TO REPLACE TWO MISSING TERMINAL SECTION WOOD POSTS. PROVIDE AND INSTALL MISSING AND DAMAGED WOOD BLOCKOUTS AND HARDWARE. MATCH EXISTING GUARDRAIL HEIGHTS AT THE TWO POSTS BEING REPLACED.
4. PROVIDE WOOD GUARDRAIL POSTS MATCHING EXISTING AND CONFORMING TO TF13 "GUIDE TO STANDARDIZED ROADSIDE HARDWARE" AND AASHTO M 168. TREAT ACCORDING TO AASHTO M 133. INSTALL BY EITHER DRILLING OR DRIVING THROUGH THE COMPACTED FILL MATERIAL.

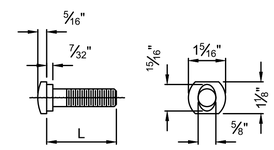


⅝" GUARDRAIL BOLT

| L | THREAD LENGTH |
|---|---|
| 1¼" | 1⅛" MINIMUM |
| 2" | 1¾" MINIMUM |
| 10" | 4" MINIMUM |
| 18" | 4" MINIMUM |
| 25" | 4" MINIMUM |

GUARDRAIL BOLT AND RECESS NUT

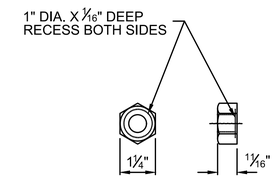


⅝" RECESS NUT

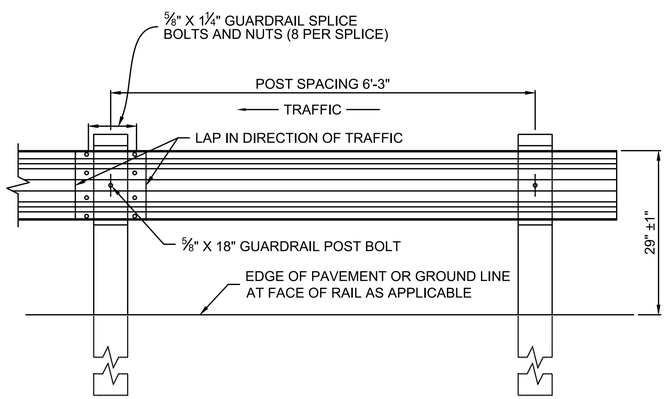


POST SPACING
STANDARD POST SECTION

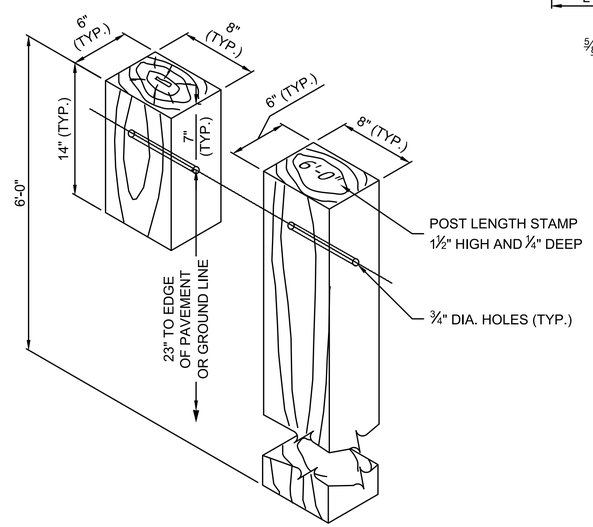


STANDARD HOLE ARRANGEMENT
POST AND BLOCKOUT DETAIL

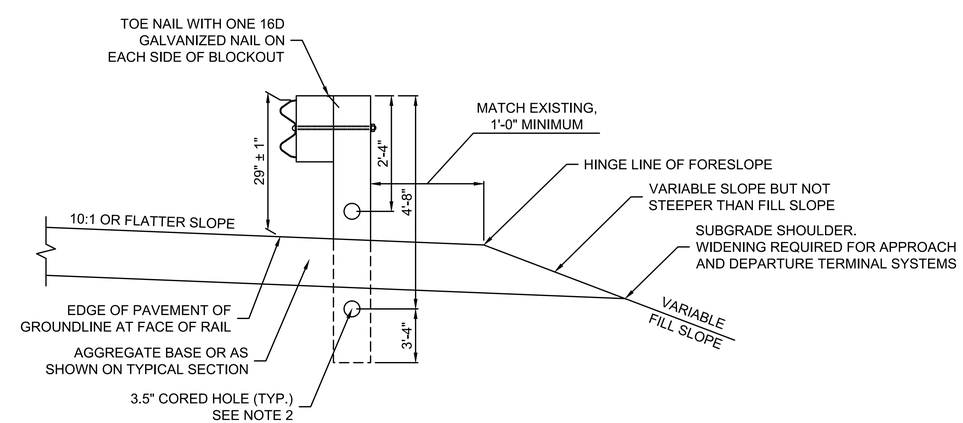


TYPICAL GUARDRAIL
CROSS SECTION

A G4 W-BEAM GUARDRAIL WOOD POST DETAILS
NO SCALE

FULL SIZE DRAWINGS = 22"x34" 0" 1"
BAR MEASURES 1" LONG

1 NEW SHEET BY ADDENDUM NO. 1

JAMES MILLS NEW MEXICO 29711 PROFESSIONAL ENGINEER
James Mills
2026.04.07
10:14:45-06'00'

| DESIGNED: C. MEYER | SUB SHEET NO. | TITLE OF SHEET CIVIL GUARDRAIL DETAILS | DRAWING NO. 315 182751 |
|---|---|---|---|
| CADD C. MEYER | 04C514 | | PMIS/PKG NO. 266697 |
| TECH. REVIEW: J. MILLS | | | SHEET 206 OF 203 |
| DATE: 01/16/2026 | | BANDELIER NATIONAL MONUMENT | |

XG-Border_BAND
XC-BAND_2D-EG-Master
XC-ROADWAY
1/14/2026 1:15 PM DUDLEYMJ P24 04C514_D3167658_ROADWAY DETAILS.DWG

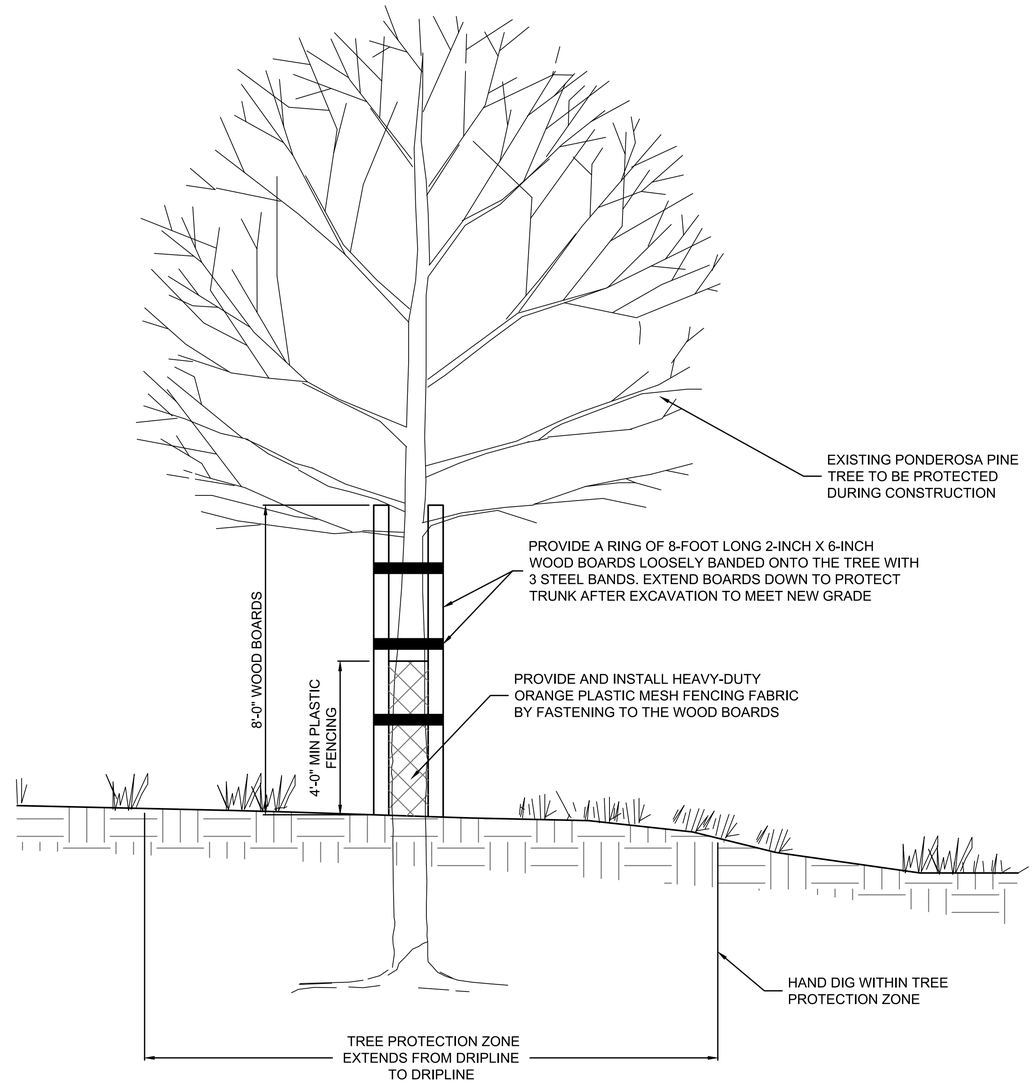


## NOTES:

1. PHOTOGRAPH THE TREE ON ALL SIDES TO RECORD THE EXISTING CONDITION.
2. THE CONTRACTOR SHALL PROTECT THE TREE BY INSTALLING A RING OF WOOD BOARDS AND ORANGE SAFETY FENCE AROUND THE TRUNK PRIOR TO CONSTRUCTION ACTIVITIES.
3. HAND DIG IN AREAS TO BE EXCAVATED WITHIN THE TREE PROTECTION ZONE UNLESS OTHERWISE APPROVED BY THE CONTRACTING OFFICER. A VACUUM TRUCK MAY BE USED TO REMOVE MATERIAL IN LIEU OF HAND DIGGING.
4. EXTEND TREE PROTECTION DOWNWARD AS THE EXCAVATION PROGRESSES.
5. CONTINUE EXCAVATING DOWN ON ALL SIDES OF THE TREE, IN APPROXIMATELY EVEN GRADES, AS PER THE PLANS.
6. THE CONTRACTOR SHALL NOTIFY THE CONTRACTING OFFICER IF TREE ROOTS 2" OR GREATER ARE ENCOUNTERED AND WAIT FOR DIRECTION BEFORE CONTINUING TO EXCAVATE.
7. IMMEDIATELY HALT CONSTRUCTION IF IT APPEARS THE STABILITY OF THE TREE IS IN DANGER AND NOTIFY THE CONTRACTING OFFICER FOR DIRECTION.
8. COORDINATE TREE PROTECTION DETAILS WITH THE CONTRACTING OFFICER.

A TREE PROTECTION DETAILS
NO SCALE

FULL SIZE DRAWINGS = 22"x34" 0" 1"
BAR MEASURES 1" LONG

1 NEW SHEET BY ADDENDUM NO. 1

JAMES MILLS NEW MEXICO 29711 PROFESSIONAL ENGINEER
James Mills
2026.04.01
10:15:02-06'00'

| | | | |
|---|---|---|---|
| DESIGNED: C. MEYER | SUB SHEET NO. | TITLE OF SHEET CIVIL TREE PROTECTION DETAIL | DRAWING NO. 315 182751 |
| CADD C. MEYER | 04C515 | | PMIS/PKG NO. 266697 |
| TECH. REVIEW: J. MILLS | | | SHEET 207 OF 203 |
| DATE: 01/16/2026 | | BANDELIER NATIONAL MONUMENT | |

XG-Border_BAND

2/25/2026 3:51 PM DUDLEYMJ R24 04C515_D3167658_ROADWAY DETAILS.DWG