U.S. DEPARTMENT OF AGRICULTURE
FOREST SERVICE, REGION 1

CONSTRUCTION PLANS FOR:

SAM OWEN CAMPGROUND IMPROVEMENTS

IDAHO PANHANDLE NATIONAL FORESTS
SANDPOINT RANGER DISTRICT

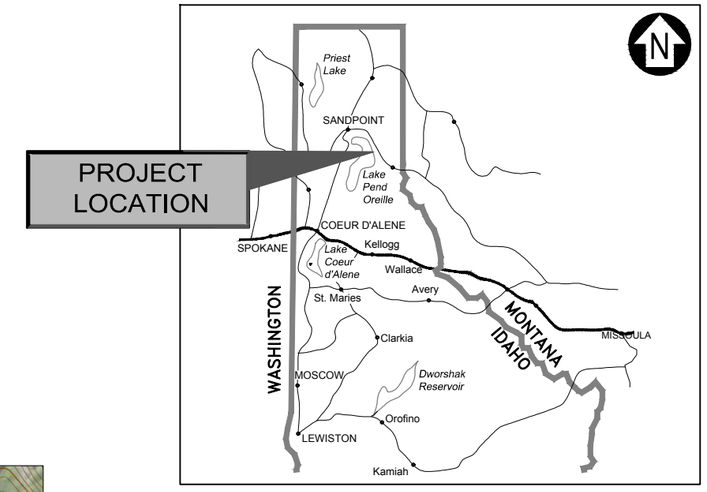

INDEX TO SHEETS

NO.	DESCRIPTION
1	COVER SHEET
2	PROJECT CONTROL SHEET
3 - 5	LEGEND, QUANTITIES & GENERAL NOTES
6 - 15	DEMOLITION PLAN
16 - 25	SITE PLAN
26 - 33	SCENTED LEAF ROADWAY PLAN & PROFILE
34 - 50	GRADING PLAN
51 - 69	DETAILS
70 - 72	ELECTRICAL PLAN

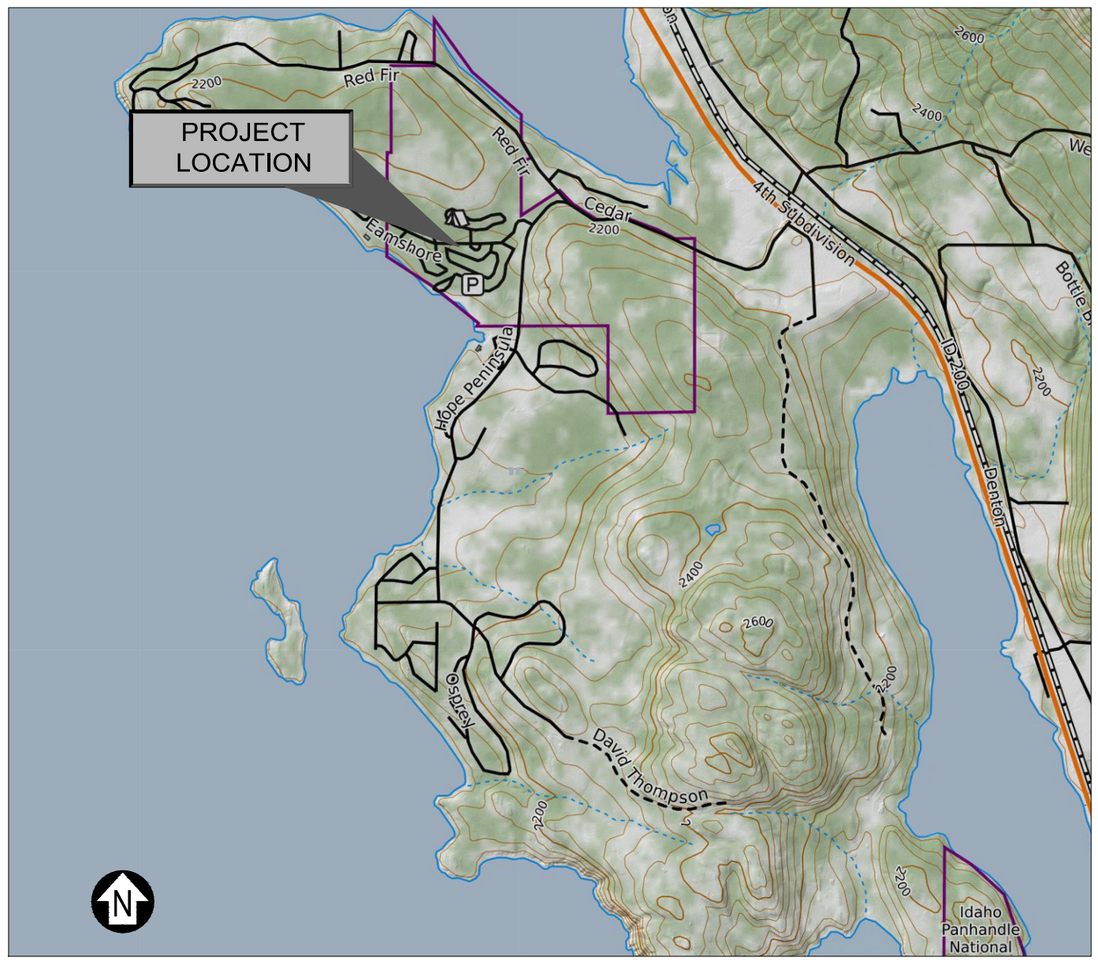

VICINITY MAP

APPROVED:

ANDREW SKOWLUND — Digitally signed by ANDREW SKOWLUND Date: 2026.05.07 16:29:21 -07'00'

DISTRICT RANGER — DATE
SANDPOINT RANGER DISTRICT

JAMES GEBHARDT — Digitally signed by JAMES GEBHARDT Date: 2026.05.20 08:37:23 -07'00'

FOREST ENGINEER — DATE
IDAHO PANHANDLE NATIONAL FORESTS

Digitally signed by Jason Brey (for Tim Gilloon) Date: 2026.05.21 11:25:03 -07'00'

FOREST SUPERVISOR — DATE
IDAHO PANHANDLE NATIONAL FORESTS

DOUGLAS WRIGHT — Digitally signed by DOUGLAS WRIGHT Date: 2026.05.21 17:07:27 -07'00'

NAMP LANDSCAPE ARCHITECT — DATE
NORTHERN REGION

CORRINE KEGEL — Digitally signed by CORRINE KEGEL Date: 2026.05.27 09:59:36 -06'00'

DIRECTOR OF ENGINEERING — DATE
NORTHERN REGION

PROFESSIONAL ENGINEER LICENSED 18219 STATE OF IDAHO PAUL DRUYVESTEIN

4/22/2026

DJ&A ENGINEERS PLANNERS SURVEYORS

4/20/26 12:00 DANIEL LEBSOCK C:\DJA-PW\WORK\DJA-PROD\DMS29121\7431 - COVER.DWG;

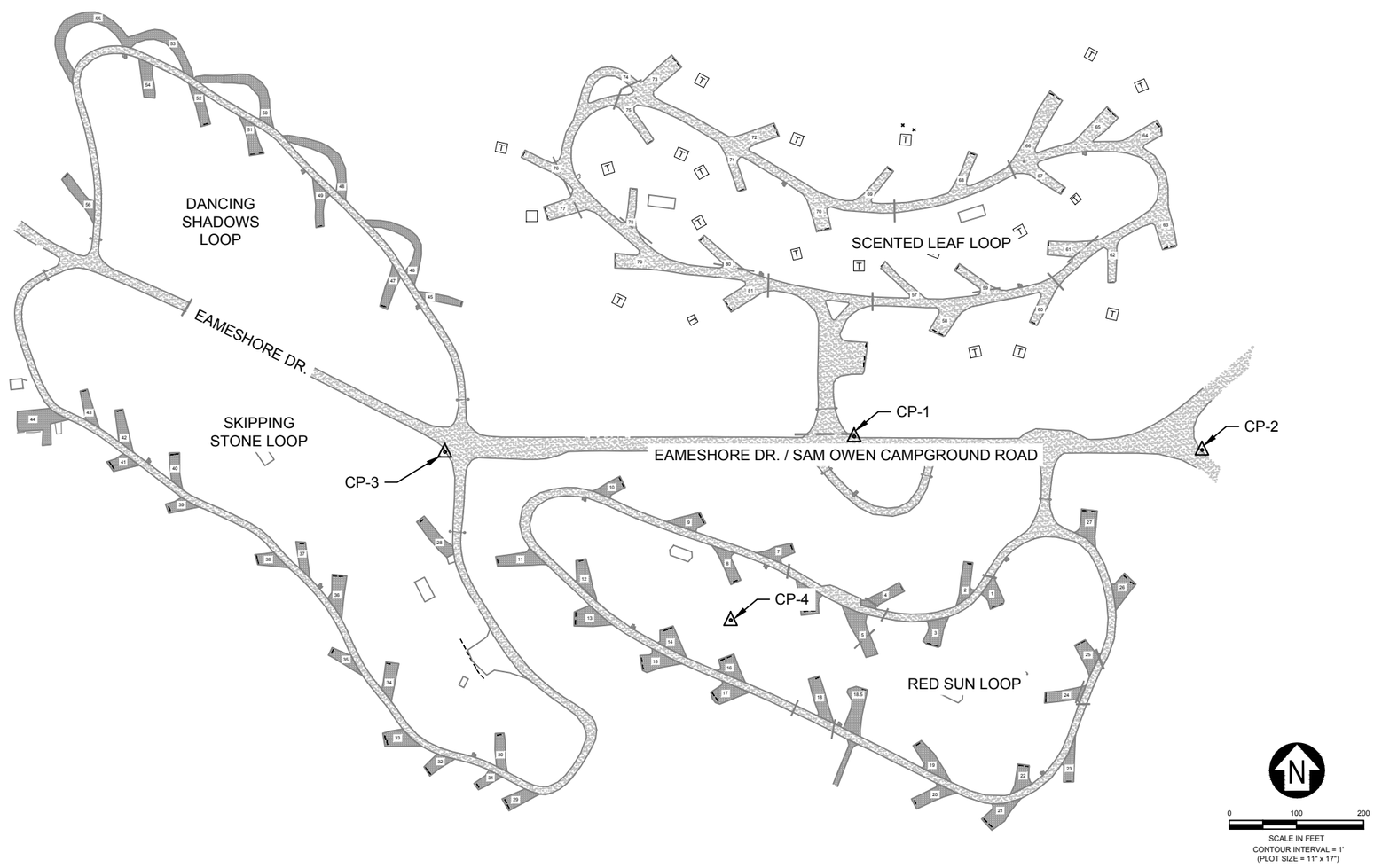

PROJECT CONTROL POINTS

CONTROL POINT TABLE				
POINT #	NORTHING	EASTING	ELEVATION	DESCRIPTION
CP-1	2389522.55	2493962.38	2103.80	SURVEY-CONTROL-POINT-SET-DJA, SCLRPC, , ,
CP-2	2389502.47	2494479.86	2104.38	SURVEY-CONTROL-POINT-SET-DJA, SCLRPC, , ,
CP-3	2389499.63	2493353.33	2114.30	SURVEY-CONTROL-POINT-SET-DJA, SCLRPC, , RPC,
CP-4	2389249.18	2493778.58	2089.73	SURVEY-CONTROL-POINT-SET-DJA, SCLRPC, , ,

SURVEY MAPPING INFORMATION

DRAWING COORDINATE SYSTEM: ID83-WF
DRAWING UNITS: USSFT
DRAWING HORIZONTAL/GEOMETRIC DATUM: NAD83
DRAWING VERTICAL DATUM: NAVD88

United States Department of Agriculture
Forest Service

REGION 1
NORTHERN REGION

PROJECT NAME

SAM OWEN CAMPGROUND IMPROVEMENTS

IDAHO PANHANDLE NATIONAL FORESTS

SANDPOINT RANGER DISTRICT

DRAWING TITLE

PROJECT SITE CONTROL

DATE
APRIL 2026

ARCHIVE NO.

DESIGNER
D. LEBSOCK

DRAWN
D. LEBSOCK

CHECKED
P. DRUYVESTEIN

PROJECT NO.
7431

DWG SHEET NO.
2

SHEET 2 OF 72

4/20/26 08:48 DANIEL.LEBSOCK C:\DJA-PWWORK\DJA-PROD\DMS29121\7431 - LEGEND & GEN NOTES.DWG;

SUMMARY OF ESTIMATED QUANTITIES - BASE BID

ITEM NO.	ITEM DESCRIPTION	METHOD	UNIT	QTY	REMARKS
15101	MOBILIZATION	LSQ	LS	1	
15201	CONSTRUCTION SURVEY AND STAKING, METHOD 2,TOLERANCE CLASS A	LSQ	LS	1	
15401	CONTRACTOR TESTING	LSQ	LS	1	
15713	SOIL EROSION & POLLUTION CONTROL	LSQ	LS	1	
15802	WATERING FOR DUST CONTROL	LSQ	LS	1	
20101	CLEARING AND GRUBBING, DISPOSAL METHOD (a)	LSQ	LS	1	
20106	REMOVAL OF INDIVIDUAL TREES, DISPOSAL METHOD (a)	AQ	EA	17	
20208	STUMP REMOVAL, DISPOSAL METHOD (a)	AQ	EA	14	6 STUMPS IN DANCING SHADOW LOOP, 8 STUMPS IN SCENTED LEAF LOOP
20301A	REMOVAL OF CONCRETE BOLLARDS, DISPOSAL METHOD (a)	LSQ	LS	1	
20301B	REMOVAL OF SITE MARKERS, DISPOSAL METHOD (a)	LSQ	LS	1	
20301C	REMOVAL OF PICNIC TABLE, DISPOSAL METHOD (a)	LSQ	LS	1	
20301D	REMOVAL OF FIRE RING, DISPOSAL METHOD (a)	LSQ	LS	1	
20301E	REMOVAL OF WHEELSTOPS, DISPOSAL METHOD (a)	LSQ	LS	1	
20302A	REMOVAL OF CULVERT, DISPOSAL METHOD (a)	AQ	EA	1	
20302B	REMOVAL OF GATES, DISPOSAL METHOD (a)	AQ	EA	6	
20302C	REMOVAL OF SIGN, DISPOSAL METHOD (a)	AQ	EA	1	
20302D	REMOVAL OF EXISTING KIOSK/FEE SIGNAGE, SALVAGE	AQ	EA	2	MOVE SALVAGED MATERIAL TO FOREST SERVICE BONEYARD
20302E	REMOVAL OF EXISTING HOLDING TANK INLET AND INFRASTRUCTURE, DISPOSAL METHOD (A)	AQ	EA	1	
20302F	REMOVAL OF WOOD FENCE, DISPOSAL METHOD (a)	LSQ	LS	1	
20407	ROADWAY/SPUR EXCAVATION, PLACEMENT METHOD 2, TOLERANCE CLASS 1	CQ	CY	3,900	IN-PLACE QUANTITY NOT ADJUSTED FOR SHRINK/SWELL
21103	ROADWAY OBLITERATION, METHOD (2)	CQ	CY	900	
30112	AGGREGATE SURFACE COURSE, GRADING CRUSHER FINES (4" DEPTH), METHOD (b)	CQ	CY	430	3 PASSES WITH ROLLER
30201	AGGREGATE BASE, METHOD (b) (6" DEPTH)	CQ	CY	2,750	
30207	AGGREGATE SURFACE COURSE, METHOD (b) (4" DEPTH)	CQ	CY	240	
40301	ASPHALT CONCRETE, IDAHO DOT, TYPE II (3" DEPTH)	AQ	TON	95	ACCESSIBLE TRAILS
40304	ASPHALT CONCRETE, IDAHO DOT, TYPE II (4" DEPTH)	AQ	TON	1,725	
40603	FOG SEAL, R4 PMRE SPRAY SEAL	CQ	SY	7,000	
60101	CONCRETE, FROST FREE SPIGOT PAD, HOST DUMP COLLAR, & DUMPSTER PADS	CQ	CY	15.0	
60201	12" PIPE CULVERT, CMP, GAGE 16, COMPACTION METHOD (a)	CQ	LF	52	CULVERT REPLACEMENT AT SITE #25 = 34' AND NEW CULVERT UNDER PATHWAY IN RED SUN LOOP = 18'
60910	WHEELSTOP, PIN DOWN	AQ	EA	90	
61101A	WATER SYSTEM (RELOCATE WATER VALVE, FROST FREE WATER SPIGOT, 1" HDPE, COUPLINGS)	LSQ	LS	1	
61101B	WATER SYSTEM (HOST SITE WATER HYDRANT ASSEMBLY)	AQ	EA	1	SITE #50, SKIPPING STONE LOOP
61201A	SEWER SYSTEM (HOST SITE HOLDING TANK, 1000 GALLON, WITH HIGH LEVEL ALARM)	AQ	EA	1	
61201B	SEWER SYSTEM (HOST SITE SEWER DUMP CONNECTION)	AQ	EA	1	
61902A	GATE, CAMPGROUND LOOP ENTRY/EXIT, SINGLE GATE	AQ	EA	4	
61902B	GATE, CAMPGROUND LOOP ENTRY/EXIT, DOUBLE GATE	AQ	EA	4	2 TOTAL DOUBLE GATE LOCATIONS. 4 TOTAL GATES.
62552	SEEDING AND MULCHING, DRY METHOD	LSQ	LS	1	APPROXIMATELY 14,000 SF
63301A	SIGN SYSTEM, REMOVE AND RESET METAL FEE TUBES	AQ	EA	2	
63301B	SIGN SYSTEM (CAMPGROUND SITE MARKER)	AQ	EA	86	
63302A	SIGN SYSTEM ("WALK-IN SITES 61-67")	AQ	EA	1	
63302C	SIGN SYSTEM ("FEE AREA")	AQ	EA	2	
63302D	SIGN SYSTEM ("ENTER")	AQ	EA	1	
63304	SIGN, 3 PANEL, INFORMATIONAL KIOSK	AQ	EA	2	
63307	REMOVING AND RESETTING PERMANENT SIGNAGE	AQ	EA	4	
63309	REMOVE AND RESET, BOULDER	AQ	EA	7	REMOVED AND RELOCATED AS DIRECTED BY CO
63501	TEMPORARY TRAFFIC CONTROL	LSQ	LS	1	
63601A	ELECTRICAL SYSTEM (RV PEDESETAL)	AQ	EA	5	
63601B	ELECTRICAL SYSTEM (SERVICE CONNECTION, HOLDING TANK ALARM CONTROL PANEL & NEW RV PEDESTAL)	LSQ	LS	1	
64001A	TIMBER CRIB STEPS	LSQ	LS	1	
64001B	PICNIC TABLE	AQ	EA	90	
64001C	FIRE RING	AQ	EA	86	
64001D	BARRIER BOULDER	AQ	EA	7	
64601	REMOVE AND RELOCATE, EXISTING VAULT TOILET	AQ	EA	1	EXISTING VAULT TOILET IN SKIPPING STONE LOOP

United States Department of Agriculture
Forest Service

REGION 1
NORTHERN REGION

PROJECT NAME

SAM OWEN CAMPGROUND IMPROVEMENTS

IDAHO PANHANDLE NATIONAL FORESTS

SANDPOINT RANGER DISTRICT

DRAWING TITLE

LEGEND, QUANTITIES, & GEN NOTES 1

DATE
APRIL 2026

ARCHIVE NO.

DESIGNER
D. LEBSOCK

DRAWN
D. LEBSOCK

CHECKED
P. DRUYVESTEIN

DWG SHEET NO.
3

PROJECT NO.
7431

SHEET 3 OF 72

4/21/26 15:19 DANIEL.LEBSOCK C:\DJA-PWWORK\DJA-PROD\DMS29121\7431 - LEGEND & GEN NOTES.DWG;

SUMMARY OF ESTIMATED QUANTITIES - SCHEDULE A

ITEM NO.	ITEM DESCRIPTION	METHOD	UNIT	QTY	REMARKS
15210	MISCELLANEOUS SURVEY AND STAKING, EXISTING UTILITIES (AS-BUILT DATA)	LSQ	LS	1	
20302	REMOVAL OF GATES, DISPOSAL METHOD (a)	AQ	EA	2	DUMP STATION LOOP
61901	FENCE, POST AND RAIL, INSTALLED	LSQ	LS	1	APPROXIMATELY 545 LF
61902	GATE, DUMP STATION LOOP	AQ	EA	2	DUMP STATION LOOP
64001	CXT SHED STRUCTURE ("SCHWEITZER" 10' - 6" X 12' - 0")	AQ	EA	1	SCENTED LEAF LOOP

SUMMARY OF ESTIMATED QUANTITIES - SCHEDULE B

ITEM NO.	ITEM DESCRIPTION	METHOD	UNIT	QTY	REMARKS
25701	CONTRACTOR DESIGNED RETAINING WALL, SPLIT FACE	LSQ	LS	4	CONCRETE GARBAGE PADS
64001	BEAR PROOF STORAGE BOXES, BEAR GUARDIAN (S124)	AQ	EA	4	WALK-IN SITES

SUMMARY OF ESTIMATED QUANTITIES - SCHEDULE C

ITEM NO.	ITEM DESCRIPTION	METHOD	UNIT	QTY	REMARKS
61101	WATER SYSTEM (HOST SITE WATER HYDRANT ASSEMBLY)	AQ	EA	4	RED SUN AND SCENTED LEAF LOOP
61201	SEWER SYSTEM (HOST SITE SEWER DUMP CONNECTION)	AQ	EA	4	RED SUN AND SCENTED LEAF LOOP

GENERAL NOTES

EXISTING UTILITIES: LOCATION OF EXISTING UTILITIES ARE UNKNOWN. THE CONTRACTOR IS RESPONSIBLE FOR LOCATING ALL UTILITIES PRIOR TO ANY EXCAVATION ACTIVITIES AND COORDINATING WITH THE APPROPRIATE UTILITY COMPANIES TO HAVE UTILITIES MOVED AS NECESSARY TO COMPLETE THE PROJECT. DAMAGE TO ANY EXISTING UTILITIES WILL BE REPAIRED AT THE CONTRACTOR'S EXPENSE.

SPECIFICATIONS: CONSTRUCT THE PROJECT IN COMPLIANCE WITH FEDERAL HIGHWAY ADMINISTRATION STANDARD SPECIFICATIONS FOR CONSTRUCTION OF ROAD AND BRIDGES ON FEDERAL HIGHWAY PROJECTS (FP-14) AND APPLICABLE FOREST SERVICE SUPPLEMENTAL SPECIFICATIONS (FSSS).

PERMITS: IT IS THE RESPONSIBILITY OF THE CONTRACTOR TO ENSURE APPROPRIATE PERMITS HAVE BEEN OBTAINED PRIOR TO CONSTRUCTION INITIATION. THE CONTRACTOR SHALL PROVIDE THE FOLLOWING PLANS TO THE USFS PRIOR TO ANY PROJECT ACTIVITY: HAZARDOUS SPILL PLAN, SAFETY PLAN, SOIL EROSION & POLLUTION CONTROL PLAN, STAGING PLAN, NOXIOUS WEED MONITORING & MITIGATION PLAN, BEAR FOOD STORAGE ORDER COMPLIANCE PLAN.

EQUIPMENT: MACHINE REFUELING & ALL MACHINE FLUID SYSTEM MAINTENANCE WILL OCCUR ON PAVEMENT OR OFF-SITE UNLESS SPECIFICALLY APPROVED BY USFS. THESE OPERATIONS MUST BE CONDUCTED IN ACCORDANCE WITH AN APPROVED HAZARDOUS SPILL PLAN.

VEGETATION: MINIMIZE ALL UNNECESSARY GROUND DISTURBANCE. MINIMIZE DAMAGE TO VEGETATION BY AVOIDING SKIDDING, MARKING, OR RUBBING ON TREE BOLES, UTILIZING THE SMALLEST/LIGHTEST EQUIPMENT NECESSARY. AVOID PROLONGED EXPOSURE IN TIME & SPACE TO MINIMIZE COMPACTION. ANY VEGETATION REMOVAL WILL BE APPROVED & MARKED BY THE CO BEFORE REMOVAL. STRAW WATTLES, STRAW BALES, OR SEED WILL BE CERTIFIED INVASIVE WEED FREE. ALL MERCHANTABLE TIMBER ACQUIRED VIA TREE REMOVAL IS TO REMAIN PROPERTY OF THE UNITED STATES DEPARTMENT OF AGRICULTURE - FOREST SERVICE. ALL AREAS OF RE-ORIENTED OR REMOVED CAMP SPURS AND TRAILS ARE TO BE REVEGETATED ACCORDING TO FSSS 625.

REMOVAL AND DISPOSAL: ALL MATERIALS DESIGNATED FOR REMOVAL BECOME THE PROPERTY OF THE CONTRACTOR AND ARE TO BE DISPOSED OF BY REMOVING FROM THE FOREST IN AN ENVIRONMENTALLY SAFE MANNER IN ACCORDANCE WITH ALL LOCAL, STATE AND FEDERAL REQUIREMENTS. REMOVAL OF EXISTING INFORMATION KIOSK AND SIGNAGE ARE TO BE REMOVED TO FOREST SERVICE STORAGE YARD NEAR DAY-USE SITE (COORDINATES: 48.21674, -116.28379).

TEMPORARY TRAFFIC CONTROL: SUBMIT A TEMPORARY TRAFFIC CONTROL PLAN TO THE CONTRACTING OFFICER FOR APPROVAL AT LEAST 30 DAYS PRIOR TO INTENDED USE.

CLEARING LIMITS: ONLY CLEAR NECESSARY AREA IN ORDER TO CONSTRUCT THE PARKING SPURS, ROADWAY, AND ACCESS TRAILS. DO NOT CLEAR ANY ADDITIONAL TREES THAT ARE NOT IDENTIFIED ON SHEETS 7 - 15 WITHOUT APPROVAL FROM THE CO.

FIELD FITTING: FINAL LOCATIONS OF WAYFINDING SIGNS, LIVING AREAS, SITE SIGNAGE, INFORMATION KIOSKS, FEE TUBES, FIRE RINGS, PICNIC TABLES, COOKING PEDESTALS, AND BEAR PROOF BOXES MUST BE VERIFIED BY THE CO.

EXCAVATION AND DEMO: THE CONTRACTOR IS RESPONSIBLE FOR THE REMOVAL OF EXISTING GRAVEL MATERIAL FROM THE PROJECT SITE. SUITABLE GRAVEL MAY BE STOCKPILED FOR TESTING AND POTENTIAL REUSE IN THE GRAVEL SECTION OR AS SURFACE AGGREGATE OF THE PROPOSED WORK. ALL REUSED MATERIAL MUST MEET THE SPECIFIED QUALITY STANDARDS TO ENSURE COMPLIANCE WITH PROJECT REQUIREMENTS BEFORE USE IN PROPOSED WORK.

POINT FILE: FINISH SURFACE POINT FILES WILL BE PROVIDED TO THE CONTRACTOR UPON REQUEST.

SOIL EROSION CONTROL NOTES:

1. PROTECT AGAINST SOIL EROSION AND SEDIMENTATION DURING CONSTRUCTION IN ACCORDANCE WITH FP-14 SECTION 157, THE PROJECT PERMITS, FOREST SERVICE HANDBOOK (FSH) 2509.22, REGION 1 BMPS FOR EROSION CONTROL, AND THE GUIDANCE FOR THE INVASIVE PLANT MANAGMENT PROGRAM (KROSSE 2017). PREPARE & SUBMIT A SOIL EROSION AND SEDIMENT CONTROL PLAN TO THE CONTRACTING OFFICER FOR APPROVAL AT LEAST THIRTY (30) DAYS PRIOR TO BEGINNING WORK. SEE SECTION 157 OF THE SUPPLEMENTAL SPECIFICATIONS FOR DETAILS. UTILIZE STRAW WATTLES & SILT FENCES WHERE NEEDED TO MINIMIZE CONSTRUCTION EROSION TRANSPORT INTO STREAMS AND LAKES.

2. STRUCTURE EXCAVATION, RIPRAP, AND BACKFILL ARE TO BE COMPLETED IN ACCORDANCE WITH THE CONTRACT SPECIFICATIONS. STANDING OR RUNNING WATER IN THE WORK AREA DOES NOT RELIEVE THE CONTRACTOR FROM MEETING THE SPECIFICATIONS.

United States Department of Agriculture
Forest Service

REGION 1
NORTHERN REGION

PROJECT NAME
SAM OWEN CAMPGROUND IMPROVEMENTS

IDAHO PANHANDLE NATIONAL FORESTS

SANDPOINT RANGER DISTRICT

DRAWING TITLE
LEGEND, QUANTITIES, & GEN NOTES 2

DATE
APRIL 2026

ARCHIVE NO.

DESIGNER
D. LEBSOCK

DRAWN
D. LEBSOCK

CHECKED
P. DRUYVESTEIN

PROJECT NO.
7431

DWG SHEET NO.
4

SHEET 4 OF 72

4/20/26 08:48 DANIEL.LEBSOCK C:\DJA-PWWORK\DJA-PROD\DMS29121\7431 - LEGEND & GEN NOTES.DWG;

ABBREVIATIONS

AQ	ACTUAL QUANTITY
BLDG	BUILDING
CL	CENTERLINE
CMP	CORRUGATED METAL PIPE
CO	CONTRACTING OFFICER
CONST.	CONSTRUCTION
COR	CONTRACTING OFFICER'S REPRESENTATIVE
CP	CONTROL POINT
CQ	CONTRACT QUANTITY
DIA, Ø	DIAMETER
EOA	EDGE OF ASPHALT
EOC	EDGE OF CONCRETE
EOG	EDGE OF GRAVEL
EL, ELEV	ELEVATION
FG	FINISHED GRADE
FSSS	FOREST SERVICE SUPPLEMENTAL SPECIFICATIONS
FT, '	FEET OR MINUTES OF DEGREES
IN, "	INCH OR SECONDS OF DEGREES
LSQ	LUMP SUM QUANTITY
MAX	MAXIMUM
MISC.	MISCELLANEOUS
MIN	MINIMUM
N/A	NOT APPLICABLE
NO, #	NUMBER
NTS	NOT TO SCALE
PRME	POLYMER MODIFIED REJUVENATING EMULSION
QTY	QUANTITY
RD	ROAD
RPC	RED PLASTIC CAP
SCH.	SCHEDULE
STA	STATION
TYP.	TYPICAL

LEGEND

- EXISTING - EDGE OF GRAVEL
- EXISTING - EDGE OF ASPHALT
- EXISTING - CULVERT PIPE
- 7000 EXISTING - CONTOUR ELEVATION LABEL
- EXISTING - MAJOR CONTOUR TOPO LINE
- EXISTING - MINOR CONTOUR TOPO LINE
- EXISTING - BUILDING OVERHANG
- PROPOSED - EDGE OF ASPHALT
- PROPOSED - EDGE OF GRAVEL
- PROPOSED - ROAD CENTERLINE
- PROPOSED - EDGE OF ROAD
- PROPOSED - CONSTRUCTION LIMITS
- PROPOSED - LIVING AREA
- PROPOSED - EDGE OF WALK-IN SITES TRAIL
- PROPOSED - EDGE OF CONCRETE
- x x PROPOSED - FENCE
- PROPOSED - GATE
- PROPOSED - CONCRETE
- PROPOSED - ASPHALT
- PROPOSED - SURFACE GRAVEL
- PROPOSED - OBLITERATE EXISTING ASPHALT & STOCKPILE GRAVEL
- PROPOSED - OBLITERATE EXISTING ASPHALT
- PROPOSED - OBLITERATE & STOCKPILE EXISTING GRAVEL
- PROPOSED - EXISTING ASPHALT, PROTECT IN PLACE
- PROPOSED - EXISTING ASPHALT TO HAVE PMRE APPLIED

SYMBOLS

- EXISTING - WATER SPIGOT
- EXISTING - BOLLARD
- EXISTING - TREE
- EXISTING - FIRE RING
- EXISTING - PICNIC TABLE
- EXISTING - SITE MARKER
- EXISTING - SIGNAGE
- EXISTING - SIGNAGE, TRAFFIC REFLECTOR
- E EXISTING - ELECTRICAL MISC.
- EM EXISTING - ELECTRICAL METER
- EXISTING - FEE TUBE
- ST EXISTING - SEWER HOLDING TANK
- W EXISTING - WATER MANHOLE/VALVE BOX
- WM EXISTING - WATER METER
- WV EXISTING - WATER VALVE
- EXISTING - WOOD POST
- PROPOSED - WATER SPIGOT
- PROPOSED - SEWER CONNECTION
- EP PROPOSED - ELECTRIC PEDESTAL
- PROPOSED - BARRIER/MECHANICALLY PLACED BOULDER
- PROPOSED - FEE TUBE
- PROPOSED - SIGNAGE
- PROPOSED - SITE MARKER
- PROPOSED - FIRE RING
- PROPOSED - PICNIC TABLE
- PROPOSED - COOKING PEDESTAL
- PROPOSED - BEAR PROOF STORAGE BOX
- PROPOSED - WATER MANHOLE/VALVE BOX

United States Department of Agriculture
Forest Service

REGION 1
NORTHERN REGION

PROJECT NAME

SAM OWEN CAMPGROUND IMPROVEMENTS

IDAHO PANHANDLE NATIONAL FORESTS

SANDPOINT RANGER DISTRICT

DRAWING TITLE

LEGEND, QUANTITIES, & GEN NOTES 3

DATE
APRIL 2026

ARCHIVE NO.

DESIGNER
D. LEBSOCK

DRAWN
D. LEBSOCK

CHECKED
P. DRUYVESTEIN

PROJECT NO.
7431

DWG SHEET NO.
5

SHEET 5 OF 72

4/20/26 08:48 DANIEL.LEBSOCK C:\DJA-PWWORK\DJA-PROD\DMS29121\7431 - LEGEND & GEN NOTES.DWG;

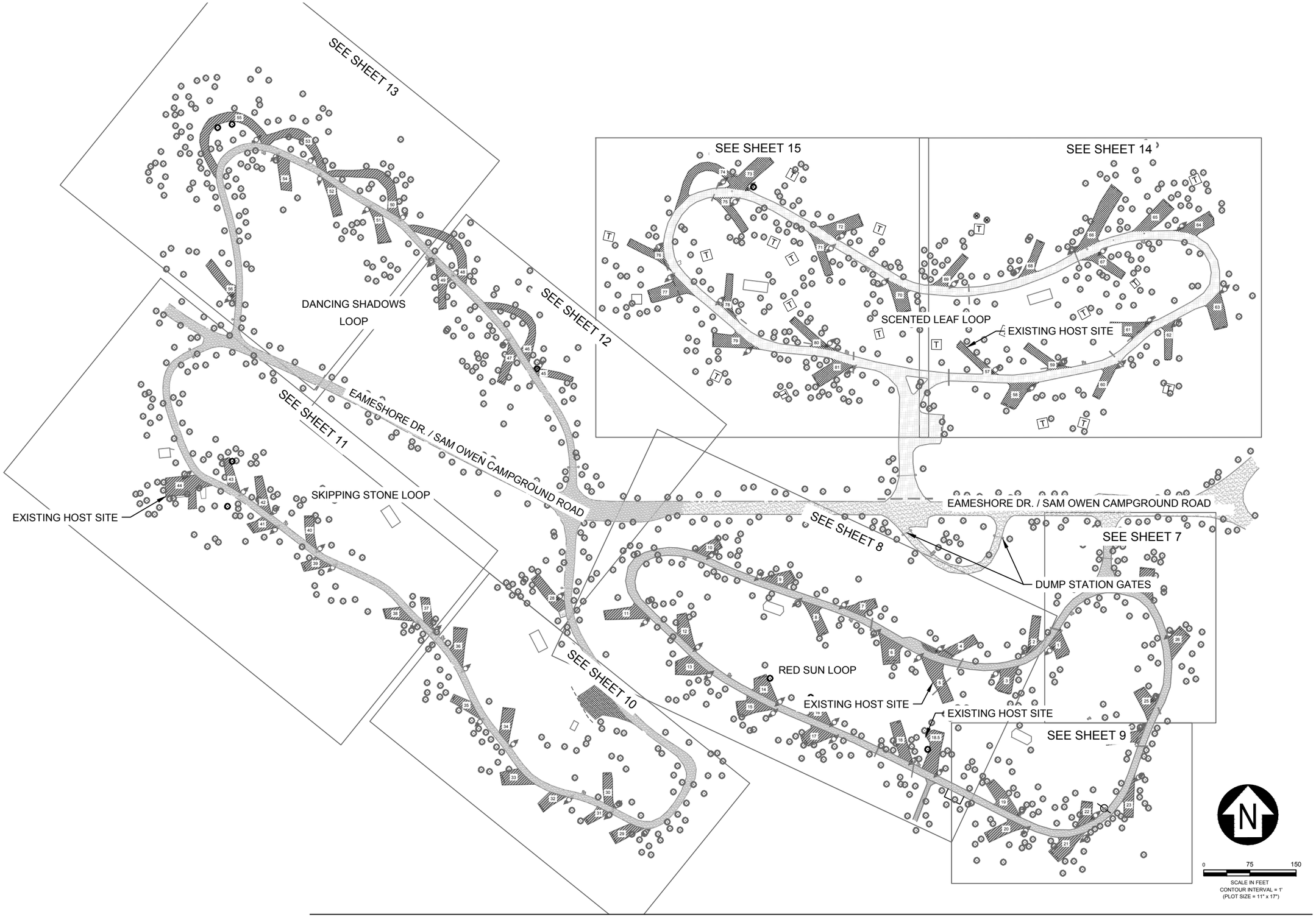

United States Department of Agriculture
Forest Service

REGION 1
NORTHERN REGION

PROJECT NAME

SAM OWEN CAMPGROUND IMPROVEMENTS

IDAHO PANHANDLE NATIONAL FORESTS

SANDPOINT RANGER DISTRICT

DRAWING TITLE

DEMOLITION PLAN - KEY MAP

DATE
APRIL 2026

ARCHIVE NO.

DESIGNER
D. LEBSOCK

DRAWN
D. LEBSOCK

CHECKED
P. DRUYVESTEIN

PROJECT NO.
7431

DWG SHEET NO.
6

SHEET 6 OF 72

4/20/26 08:52 DANIEL LEBSOCK C:\DJA-PWWORK\DJA-PROD\DMS29121\7431 - DEMOLITION PLAN.DWG;

KEY NOTES

1. REMOVE AND DISPOSE OF ALL EXISTING BOLLARDS, TYP.
2. REMOVE AND DISPOSE OF EXISTING SITE MARKER, TYP.
3. REMOVE AND DISPOSE OF EXISTING CURB STOP, TYP.
4. EXISTING SITE SIGNAGE. PROTECT IN PLACE, TYP.
5. REMOVE AND DISPOSE EXISTING PICNIC TABLE AND FIRE RING, TYP.
6. EXISTING CULVERT. PROTECT IN PLACE, TYP.

GENERAL NOTES

1. CONTRACTOR TO PROTECT EXISTING TREES IN PLACE EXCEPT FOR WHEN IDENTIFIED FOR REMOVAL ON THE PLANS..
2. SEE DETAIL 1, SHEET 54 FOR EXISTING ASPHALT TYP. SECTION.
3. DUMP STATION GATES (2) , TO BE REMOVED AND REPLACED IF SCHEDULE A IS SELECTED

HATCH KEY:

OBLITERATE & STOCKPILE EXISTING GRAVEL

EXISTING ASPHALT, PROTECT IN PLACE

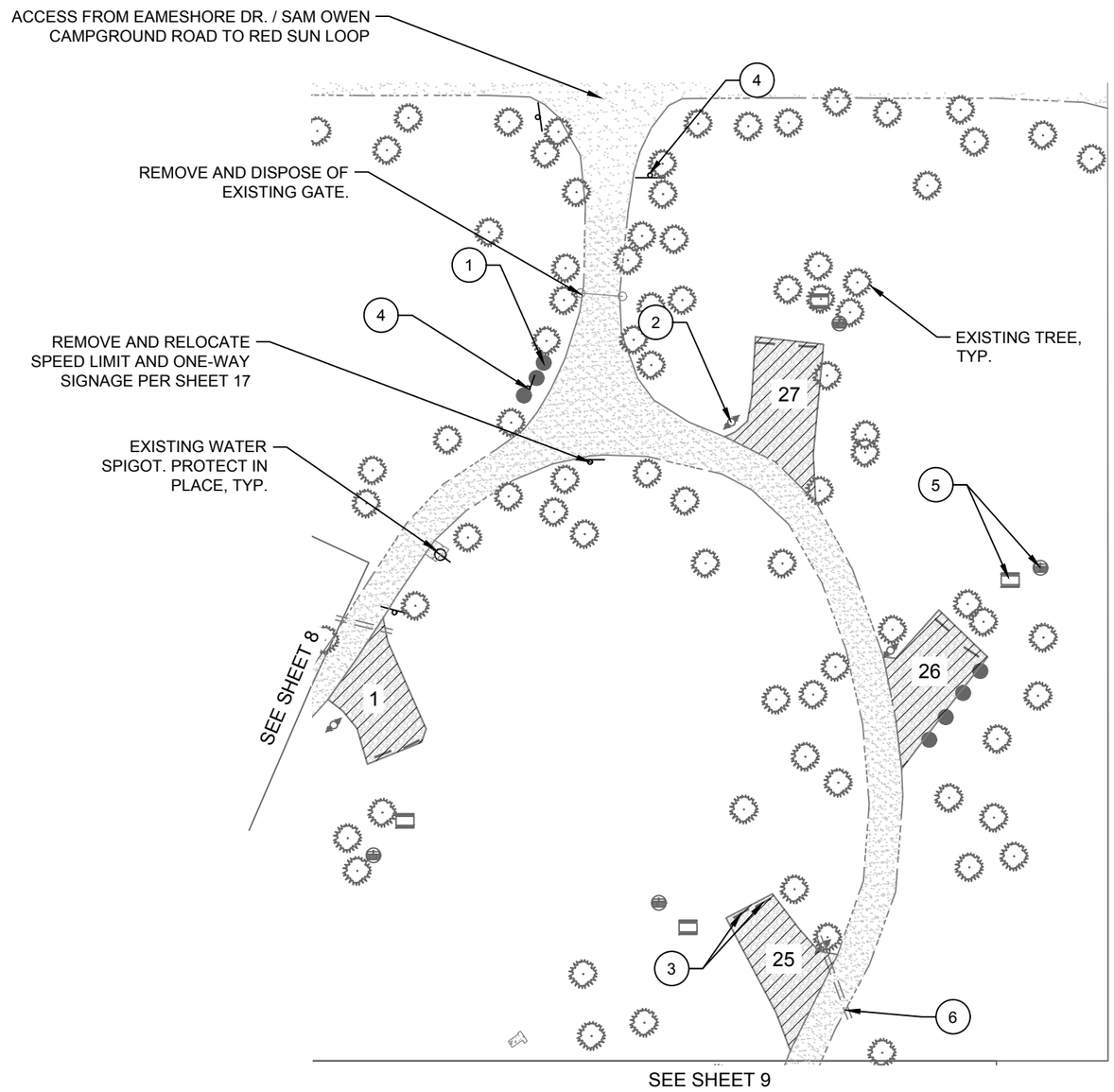

0 25 50
SCALE IN FEET
CONTOUR INTERVAL = 1'
(PLOT SIZE = 11" x 17")

United States Department of Agriculture
Forest Service

REGION 1
NORTHERN REGION

PROJECT NAME

SAM OWEN CAMPGROUND IMPROVEMENTS

IDAHO PANHANDLE NATIONAL FORESTS

SANDPOINT RANGER DISTRICT

DRAWING TITLE

DEMOLITION PLAN RED SUN LOOP ENTRANCE - N.

DATE
APRIL 2026

ARCHIVE NO.

DESIGNER
D. LEBSOCK

DRAWN
D. LEBSOCK

CHECKED
P. DRUYVESTEIN

PROJECT NO.
7431

DWG SHEET NO.
7

SHEET 7 OF 72

4/20/26 08:52 DANIEL.LEBSOCK C:\DJA-PWWORK\DJA-PROD\DMS29121\7431 - DEMOLITION PLAN.DWG;

KEY NOTES

1. REMOVE AND DISPOSE OF ALL EXISTING BOLLARDS, TYP.
2. REMOVE AND DISPOSE OF EXISTING SITE MARKER, TYP.
3. REMOVE AND DISPOSE OF EXISTING CURB STOP, TYP.
4. EXISTING SITE SIGNAGE. PROTECT IN PLACE, TYP.
5. REMOVE AND DISPOSE EXISTING PICNIC TABLE AND FIRE RING, TYP.
6. EXISTING CULVERT. PROTECT IN PLACE, TYP.
7. TEMPORARILY CAP UNDERGROUND UTILITY LINES. REMOVE AND DISPOSE OF EXISTING UTILITY CONNECTIONS AND PEDESTALS IF SCHEDULE C IS SELECTED.

GENERAL NOTES

1. CONTRACTOR TO PROTECT EXISTING TREES IN PLACE EXCEPT FOR WHEN IDENTIFIED FOR REMOVAL ON THE PLANS.
2. SEE DETAIL 1, SHEET 54 FOR EXISTING ASPHALT TYP. SECTION.

HATCH KEY:

- OBLITERATE & STOCKPILE EXISTING GRAVEL
- OBLITERATE EXISTING ASPHALT & STOCKPILE GRAVEL
- EXISTING ASPHALT, PROTECT IN PLACE

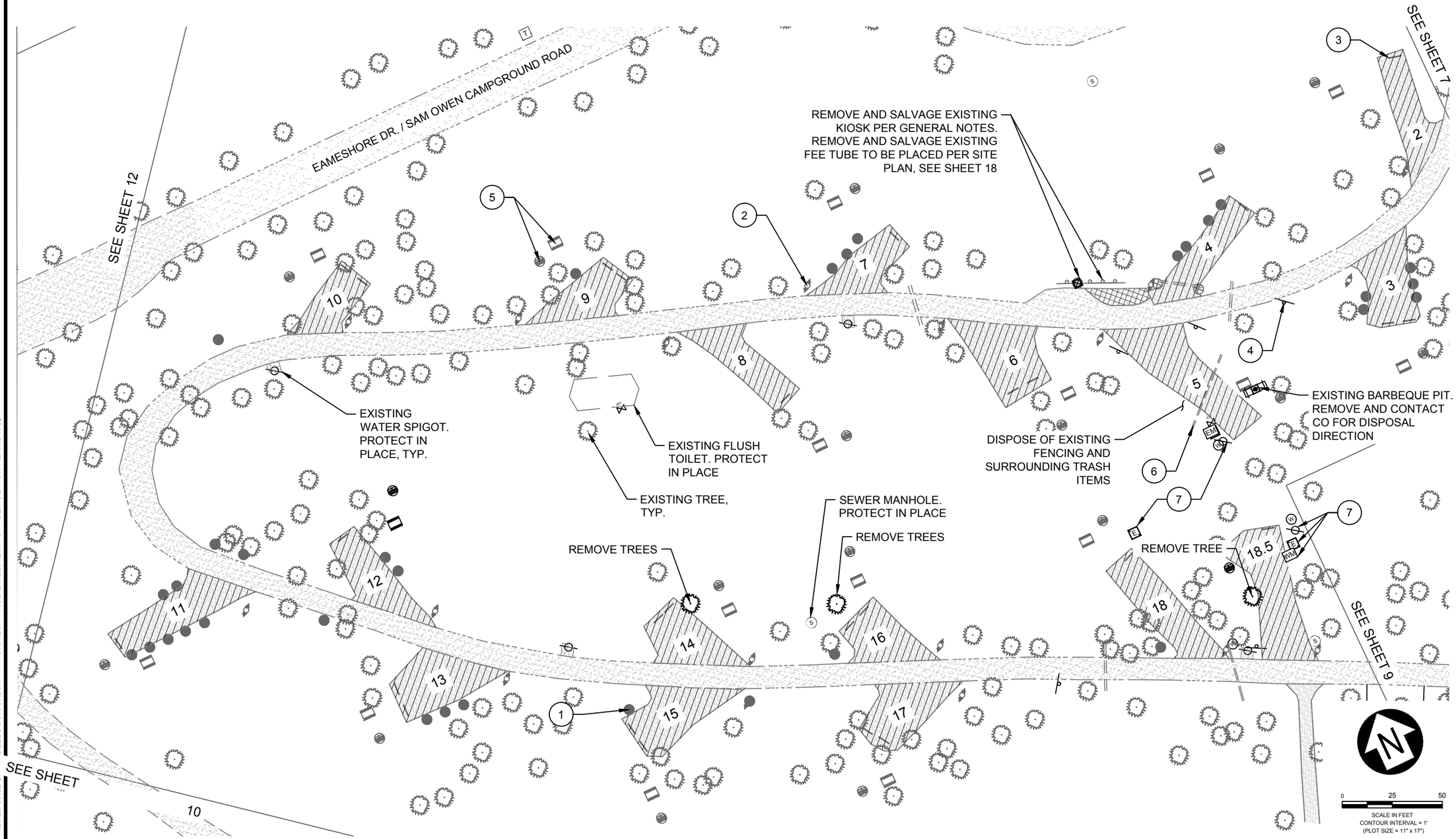

United States Department of Agriculture
Forest Service

REGION 1
NORTHERN REGION

PROJECT NAME

SAM OWEN CAMPGROUND IMPROVEMENTS

IDAHO PANHANDLE NATIONAL FORESTS

SANDPOINT RANGER DISTRICT

DRAWING TITLE

DEMOLITION PLAN RED SUN LOOP

DATE APRIL 2026	
ARCHIVE NO.	
DESIGNER D. LEBSOCK	DWG SHEET NO. 8
DRAWN D. LEBSOCK	
CHECKED P. DRUYVESTEIN	SHEET 8 OF 72
PROJECT NO. 7431	

4/20/26 08:52 D...LEBSOCK C:\DJA-PW\WORK\DJA-PROD\DMS29121\7431 - DEMOLITION PLAN.DWG;

KEY NOTES

1. REMOVE AND DISPOSE OF ALL EXISTING BOLLARDS, TYP.
2. REMOVE AND DISPOSE OF EXISTING SITE MARKER, TYP.
3. REMOVE AND DISPOSE OF EXISTING CURB STOP, TYP.
4. EXISTING SITE SIGNAGE. PROTECT IN PLACE, TYP.
5. REMOVE AND DISPOSE EXISTING PICNIC TABLE AND FIRE RING, TYP.
6. EXISTING CULVERT, PROTECT IN PLACE.

GENERAL NOTES

1. CONTRACTOR TO PROTECT EXISTING TREES IN PLACE EXCEPT FOR WHEN IDENTIFIED FOR REMOVAL ON THE PLANS.
2. SEE DETAIL 1, SHEET 54 FOR EXISTING ASPHALT TYP. SECTION.

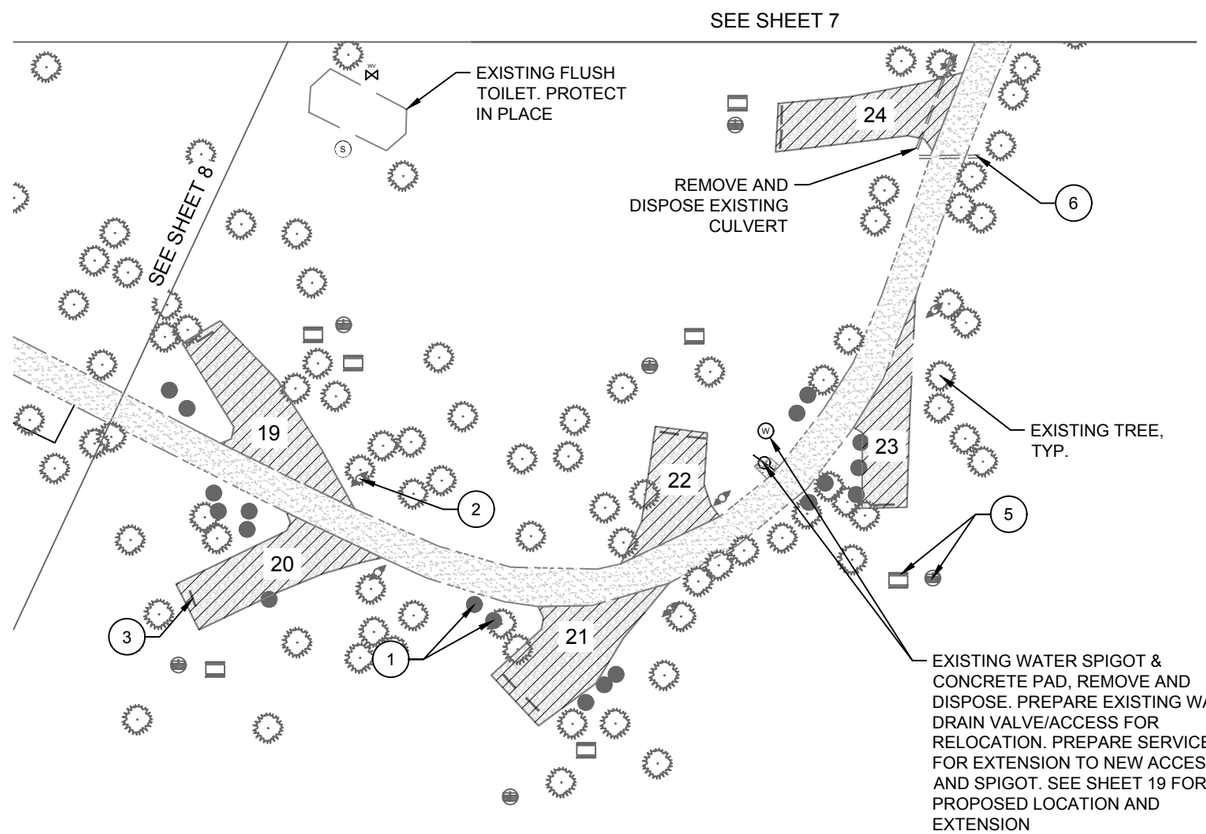

HATCH KEY:

OBLITERATE & STOCKPILE EXISTING GRAVEL

EXISTING ASPHALT, PROTECT IN PLACE

0 25 50
SCALE IN FEET
CONTOUR INTERVAL = 1'
(PLOT SIZE = 11" x 17")

United States Department of Agriculture
Forest Service

REGION 1
NORTHERN REGION

PROJECT NAME

SAM OWEN CAMPGROUND IMPROVEMENTS

IDAHO PANHANDLE NATIONAL FORESTS

SANDPOINT RANGER DISTRICT

DRAWING TITLE

DEMOLITION PLAN RED SUN LOOP ENTRANCE - S.

DATE
APRIL 2026

ARCHIVE NO.

DESIGNER
D. LEBSOCK

DRAWN
D. LEBSOCK

CHECKED
P. DRUYVESTEIN

PROJECT NO.
7431

DWG SHEET NO.
9

SHEET 9 OF 72

4/20/26 08:52 DANIEL.LEBSOCK C:\DJA-PWWORK\DJA-PROD\DMS29121\7431 - DEMOLITION PLAN.DWG;

KEY NOTES

1. REMOVE AND DISPOSE OF ALL EXISTING BOLLARDS, TYP.
2. REMOVE AND DISPOSE OF EXISTING SITE MARKER, TYP.
3. REMOVE AND DISPOSE OF EXISTING CURB STOP, TYP.
4. EXISTING SITE SIGNAGE. PROTECT IN PLACE, TYP.
5. REMOVE AND DISPOSE EXISTING PICNIC TABLE AND FIRE RING, TYP.
6. EXISTING CULVERT, PROTECT IN PLACE.
7. REMOVE AND SALVAGE EXISTING VAULT TOILET. VAULT TOILET IS TO BE RELOCATED TO SCOTCHMAN PEAK TRAILHEAD (48.164336, -116.098478). CONTRACTOR IS RESPONSIBLE FOR REMOVING, DELIVERY TO NEW LOCATION, AND INSTALLATION. CONTRACTOR WILL COORDINATE TIMING OF DELIVERY WITH CO.

GENERAL NOTES

1. CONTRACTOR TO PROTECT EXISTING TREES IN PLACE EXCEPT FOR WHEN IDENTIFIED FOR REMOVAL ON THE PLANS.
2. SEE DETAIL 1, SHEET 54 FOR EXISTING ASPHALT TYP. SECTION.

HATCH KEY:

- OBLITERATE & STOCKPILE EXISTING GRAVEL
- OBLITERATE EXISTING ASPHALT & STOCKPILE GRAVEL
- EXISTING ASPHALT, PROTECT IN PLACE

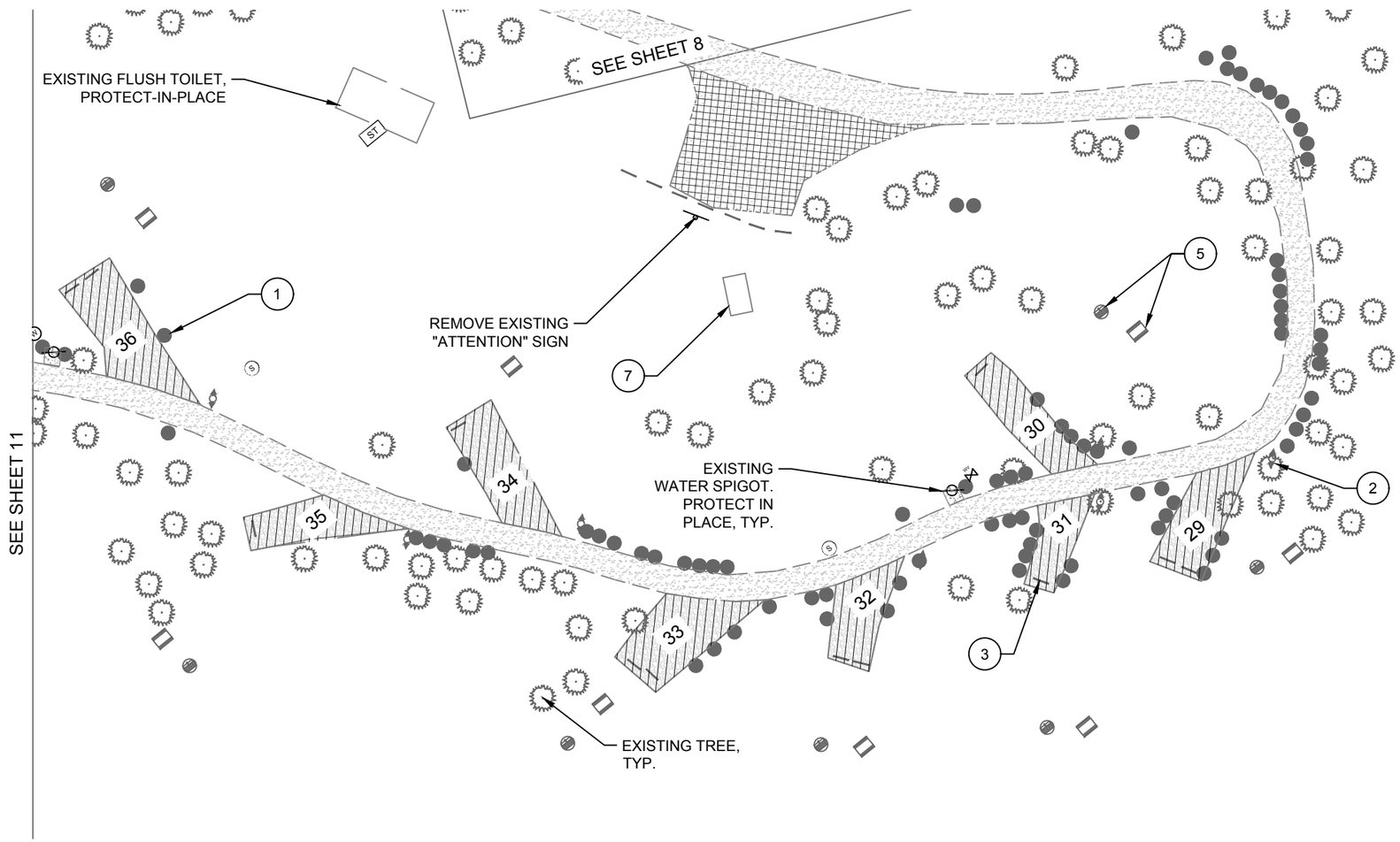

0 25 50
SCALE IN FEET
CONTOUR INTERVAL = 1'
(PLOT SIZE = 11" x 17")

USDA FOREST SERVICE
United States Department of Agriculture
Forest Service

REGION 1
NORTHERN REGION

PROJECT NAME

SAM OWEN CAMPGROUND IMPROVEMENTS

IDAHO PANHANDLE NATIONAL FORESTS

SANDPOINT RANGER DISTRICT

DRAWING TITLE

DEMOLITION PLAN SKIPPING STONE LOOP - E.

DATE
APRIL 2026

ARCHIVE NO.

DESIGNER
D. LEBSOCK

DRAWN
D. LEBSOCK

CHECKED
P. DRUYVESTEIN

PROJECT NO.
7431

DWG SHEET NO.
10

SHEET 10 OF 72

4/20/26 08:52 DANIEL LEBSOCK C:\DJA-PWWORK\DJA-PROD\DMS29121\7431 - DEMOLITION PLAN.DWG;

KEY NOTES

1. REMOVE AND DISPOSE OF ALL EXISTING BOLLARDS, TYP.
2. REMOVE AND DISPOSE OF EXISTING SITE MARKER, TYP.
3. REMOVE AND DISPOSE OF EXISTING CURB STOP, TYP.
4. EXISTING SITE SIGNAGE. PROTECT IN PLACE, TYP.
5. REMOVE AND DISPOSE EXISTING PICNIC TABLE AND FIRE RING, TYP.
6. EXISTING CULVERT, PROTECT IN PLACE.
7. TEMPORARILY CAP UNDERGROUND UTILITY LINES. REMOVE AND DISPOSE OF EXISTING UTILITY CONNECTIONS AND PEDESTALS IN SKIPPING STONE LOOP.

GENERAL NOTES

1. CONTRACTOR TO PROTECT EXISTING TREES IN PLACE EXCEPT FOR WHEN IDENTIFIED FOR REMOVAL ON THE PLANS.
2. SEE DETAIL 1, SHEET 54 FOR EXISTING ASPHALT TYP. SECTION.

HATCH KEY:

OBLITERATE & STOCKPILE EXISTING GRAVEL

EXISTING ASPHALT, PROTECT IN PLACE

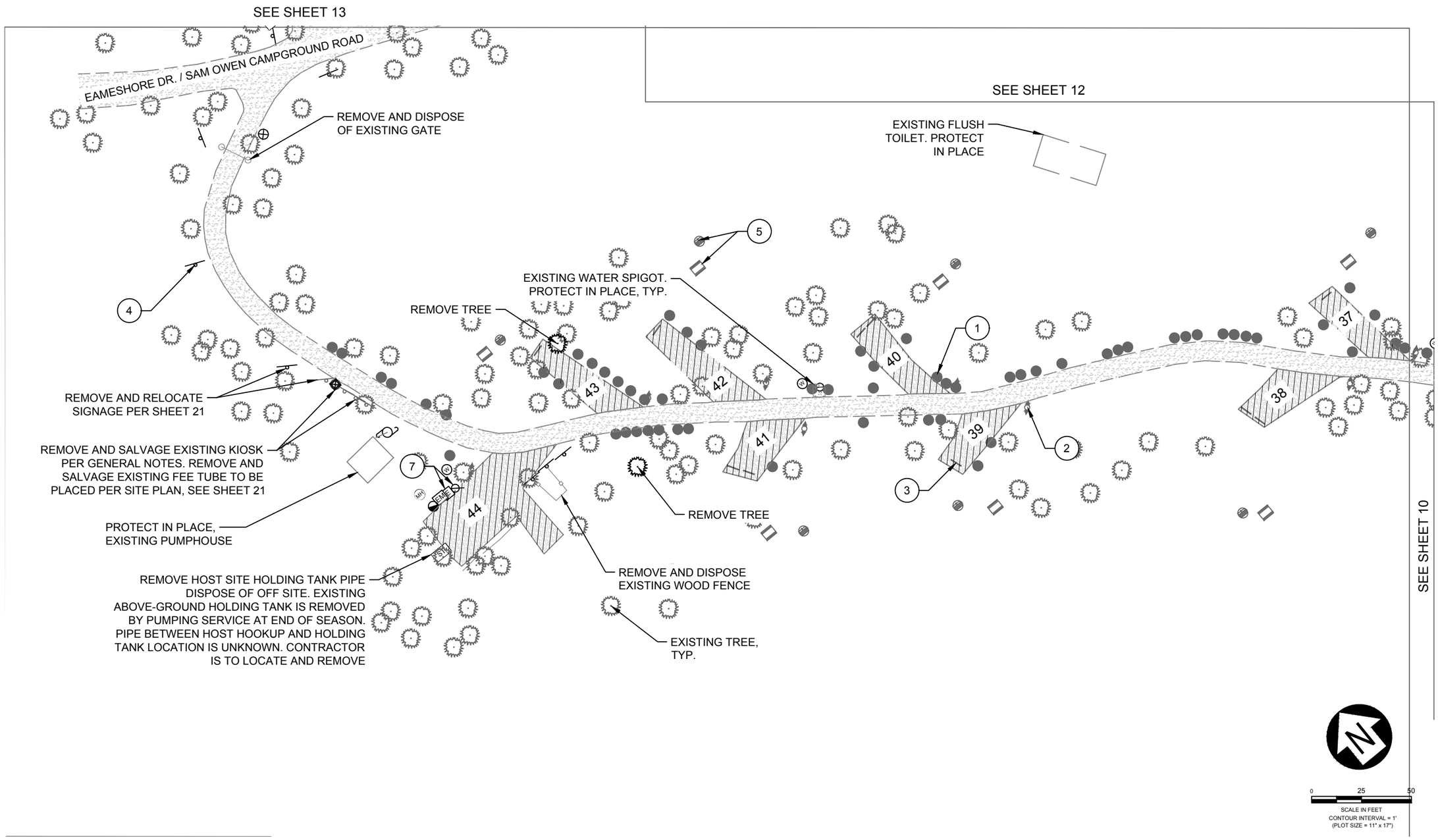

United States Department of Agriculture
Forest Service

REGION 1
NORTHERN REGION

PROJECT NAME

SAM OWEN CAMPGROUND IMPROVEMENTS

IDAHO PANHANDLE NATIONAL FORESTS

SANDPOINT RANGER DISTRICT

DRAWING TITLE

DEMOLITION PLAN SKIPPING STONE LOOP - W.

DATE
APRIL 2026

ARCHIVE NO.

DESIGNER
D. LEBSOCK

DRAWN
D. LEBSOCK

CHECKED
P. DRUYVESTEIN

PROJECT NO.
7431

DWG SHEET NO.
11

SHEET 11 OF 72

4/20/26 08:52 DANIEL.LEBSOCK C:\DJA-PW\WORK\DJA-PROD\DMS29121\7431 - DEMOLITION PLAN.DWG;

KEY NOTES

1. REMOVE AND DISPOSE OF ALL EXISTING BOLLARDS, TYP.
2. REMOVE AND DISPOSE OF EXISTING SITE MARKER, TYP.
3. REMOVE AND DISPOSE OF EXISTING CURB STOP, TYP.
4. EXISTING SITE SIGNAGE. PROTECT IN PLACE, TYP.
5. REMOVE AND DISPOSE EXISTING PICNIC TABLE AND FIRE RING, TYP.
6. EXISTING CULVERT, PROTECT IN PLACE.

GENERAL NOTES

1. CONTRACTOR TO PROTECT EXISTING TREES IN PLACE EXCEPT FOR WHEN IDENTIFIED FOR REMOVAL ON THE PLANS.
2. SEE DETAIL 1, SHEET 54 FOR EXISTING ASPHALT TYP. SECTION.

HATCH KEY:

OBLITERATE & STOCKPILE EXISTING GRAVEL

EXISTING ASPHALT, PROTECT IN PLACE

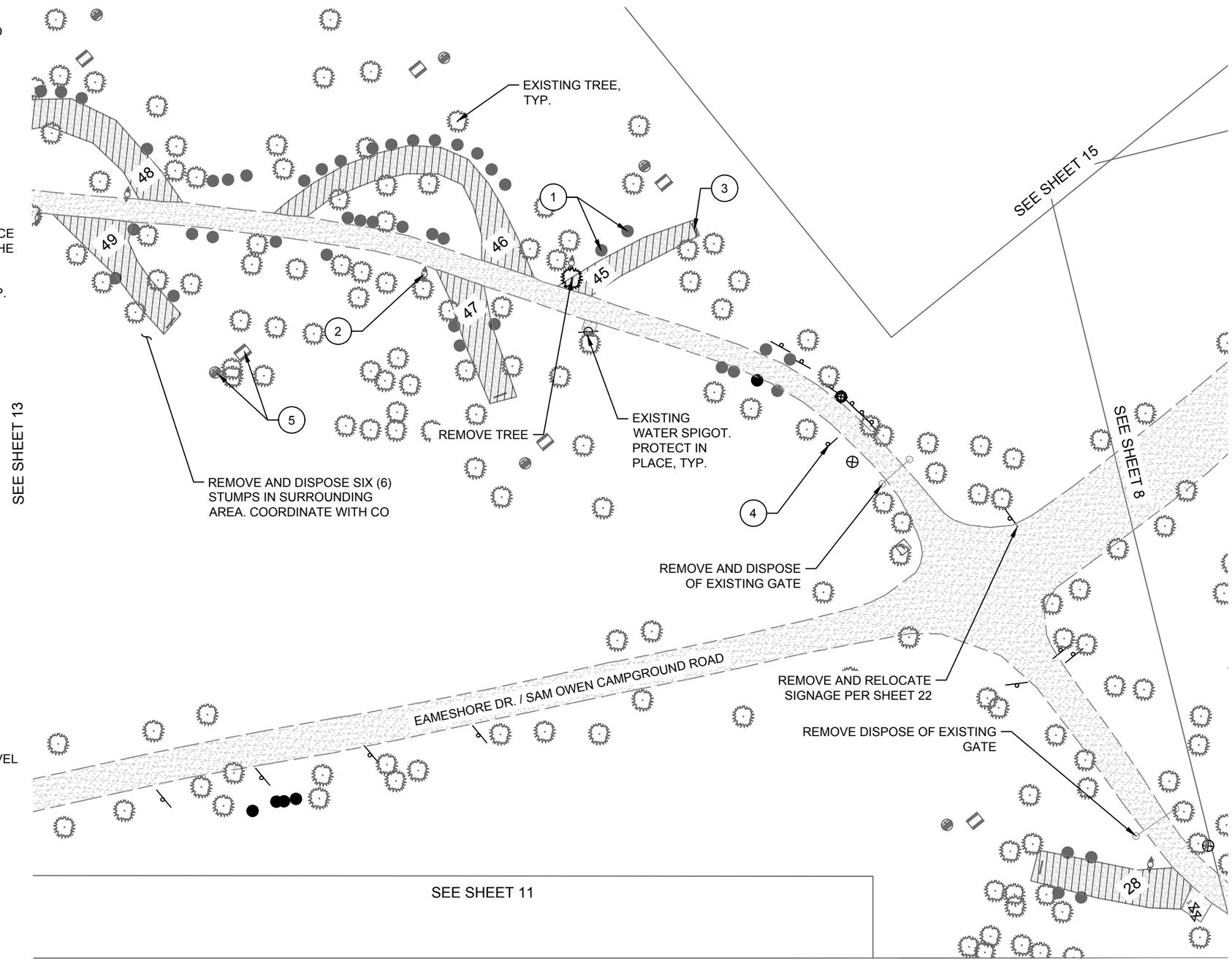

0 25 50

SCALE IN FEET
CONTOUR INTERVAL = 1'
(PLOT SIZE = 11" x 17")

4/20/26 08:52 DANIEL.LEBSOCK C:\DJA-PWWORK\DJA-PROD\DMS29121\7431 - DEMOLITION PLAN.DWG;

United States Department of Agriculture
Forest Service

REGION 1
NORTHERN REGION

PROJECT NAME

SAM OWEN CAMPGROUND IMPROVEMENTS

IDAHO PANHANDLE NATIONAL FORESTS

SANDPOINT RANGER DISTRICT

DRAWING TITLE

DEMOLITION PLAN DANCING SHADOWS LOOP - E.

DATE
APRIL 2026

ARCHIVE NO.

DESIGNER
D. LEBSOCK

DRAWN
D. LEBSOCK

CHECKED
P. DRUYVESTEIN

DWG SHEET NO.
12

PROJECT NO.
7431

SHEET 12 OF 72

KEY NOTES

1. REMOVE AND DISPOSE OF ALL EXISTING BOLLARDS, TYP.
2. REMOVE AND DISPOSE OF EXISTING SITE MARKER, TYP.
3. REMOVE AND DISPOSE OF EXISTING CURB STOP, TYP.
4. EXISTING SITE SIGNAGE. PROTECT IN PLACE, TYP.
5. REMOVE AND DISPOSE EXISTING PICNIC TABLE AND FIRE RING, TYP.
6. EXISTING CULVERT, PROTECT IN PLACE.

GENERAL NOTES

1. CONTRACTOR TO PROTECT EXISTING TREES IN PLACE EXCEPT FOR WHEN IDENTIFIED FOR REMOVAL ON THE PLANS.
2. SEE DETAIL 1, SHEET 54 FOR EXISTING ASPHALT TYP. SECTION.

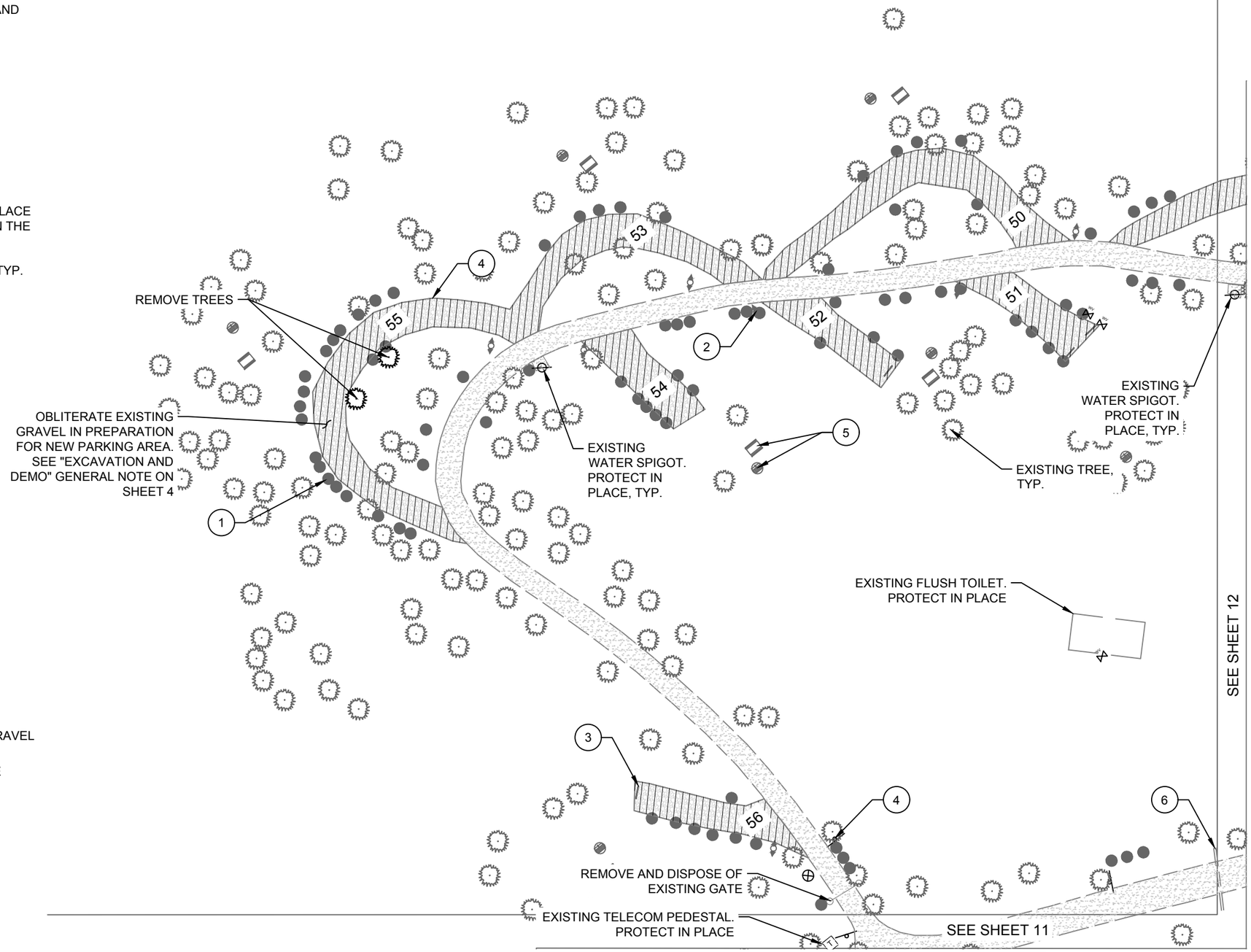

HATCH KEY:

OBLITERATE & STOCKPILE EXISTING GRAVEL

EXISTING ASPHALT, PROTECT IN PLACE

0 25 50

SCALE IN FEET
CONTOUR INTERVAL = 1'
(PLOT SIZE = 11" x 17")

4/20/26 08:52 DANIEL.LEBSOCK C:\DJA-PWWORK\DJA-PROD\DMS29121\7431 - DEMOLITION PLAN.DWG:

United States Department of Agriculture
Forest Service

REGION 1
NORTHERN REGION

PROJECT NAME

SAM OWEN CAMPGROUND IMPROVEMENTS

IDAHO PANHANDLE NATIONAL FORESTS

SANDPOINT RANGER DISTRICT

DRAWING TITLE

DEMOLITION PLAN DANCING SHADOWS LOOP - W.

DATE
APRIL 2026

ARCHIVE NO.

DESIGNER
D. LEBSOCK

DRAWN
D. LEBSOCK

CHECKED
P. DRUYVESTEIN

PROJECT NO.
7431

DWG SHEET NO.
13

SHEET 13 OF 72

KEY NOTES

1. REMOVE AND DISPOSE OF ALL EXISTING BOLLARDS, TYP.
2. REMOVE AND DISPOSE OF EXISTING SITE MARKER, TYP.
3. REMOVE AND DISPOSE OF EXISTING CURB STOP, TYP.
4. EXISTING SITE SIGNAGE. PROTECT IN PLACE, TYP.
5. REMOVE AND DISPOSE EXISTING PICNIC TABLE AND FIRE RING, TYP.
6. EXISTING CULVERT. PROTECT IN PLACE, TYP.
7. TEMPORARILY CAP UNDERGROUND UTILITY LINES. REMOVE AND DISPOSE OF EXISTING UTILITY CONNECTIONS AND PEDESTALS IF SCHEDULE C IS SELECTED.

GENERAL NOTES

1. CONTRACTOR TO PROTECT EXISTING TREES IN PLACE EXCEPT FOR WHEN IDENTIFIED FOR REMOVAL ON THE PLANS.
2. SEE DETAIL 1, SHEET 54 FOR EXISTING ASPHALT TYP. SECTION.
3. REMOVE AND DISPOSE OF EXISTING GATE AT ENTRANCE INTO SCENTED LEAF LOOP. SEE SHEET 24 FOR PROPOSED GATE REPLACEMENT AND INFORMATION.

HATCH KEY:

OBLITERATE EXISTING ASPHALT & STOCKPILE GRAVEL

OBLITERATE EXISTING ASPHALT

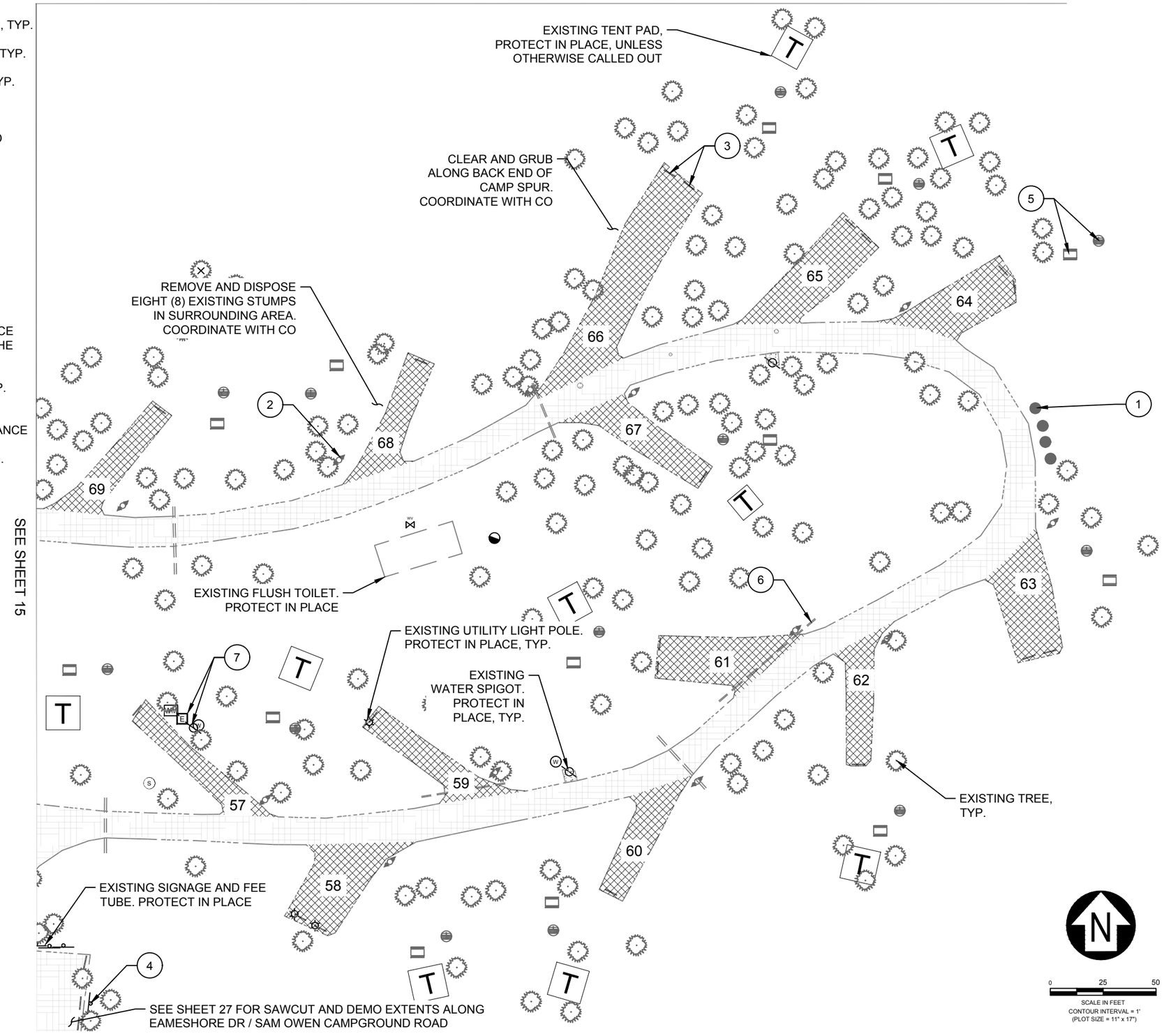

United States Department of Agriculture
Forest Service

REGION 1
NORTHERN REGION

PROJECT NAME

SAM OWEN CAMPGROUND IMPROVEMENTS

IDAHO PANHANDLE NATIONAL FORESTS

SANDPOINT RANGER DISTRICT

DRAWING TITLE

DEMOLITION PLAN SCENTED LEAF LOOP - E.

DATE
APRIL 2026

ARCHIVE NO.

DESIGNER
D. LEBSOCK

DRAWN
D. LEBSOCK

CHECKED
P. DRUYVESTEIN

PROJECT NO.
7431

DWG SHEET NO.
14

SHEET 14 OF 72

4/20/26 08:52 DANIEL.LEBSOCK C:\DJA-PWWORK\DJA-PROD\DMS29121\7431 - DEMOLITION PLAN.DWG;

KEY NOTES

1. REMOVE AND DISPOSE OF ALL EXISTING BOLLARDS, TYP.
2. REMOVE AND DISPOSE OF EXISTING SITE MARKER, TYP.
3. REMOVE AND DISPOSE OF EXISTING CURB STOP, TYP.
4. EXISTING SITE SIGNAGE. PROTECT IN PLACE, TYP.
5. REMOVE AND DISPOSE EXISTING PICNIC TABLE AND FIRE RING, TYP.
6. EXISTING CULVERT. PROTECT IN PLACE, TYP.

GENERAL NOTES

1. CONTRACTOR TO PROTECT EXISTING TREES IN PLACE EXCEPT FOR WHEN IDENTIFIED FOR REMOVAL ON THE PLANS.
2. SEE DETAIL 1, SHEET 54 FOR EXISTING ASPHALT TYP. SECTION.

HATCH KEY:

OBLITERATE EXISTING ASPHALT & STOCKPILE GRAVEL

OBLITERATE EXISTING ASPHALT

N

0 25 50

SCALE IN FEET
CONTOUR INTERVAL = 1'
(PLOT SIZE = 11" x 17")

4/20/26 08:52 DANIEL.LEBSOCK C:\DJA-PWWORK\DJA-PROD\DMS29121\7431 - DEMOLITION PLAN.DWG;

USDA FOREST SERVICE

United States Department of Agriculture
Forest Service

REGION 1
NORTHERN REGION

PROJECT NAME

SAM OWEN CAMPGROUND IMPROVEMENTS

IDAHO PANHANDLE NATIONAL FORESTS

SANDPOINT RANGER DISTRICT

DRAWING TITLE

DEMOLITION PLAN SCENTED LEAF LOOP - W.

DATE
APRIL 2026

ARCHIVE NO.

DESIGNER
D. LEBSOCK

DRAWN
D. LEBSOCK

CHECKED
P. DRUYVESTEIN

PROJECT NO.
7431

DWG SHEET NO.
15

SHEET 15 OF 72

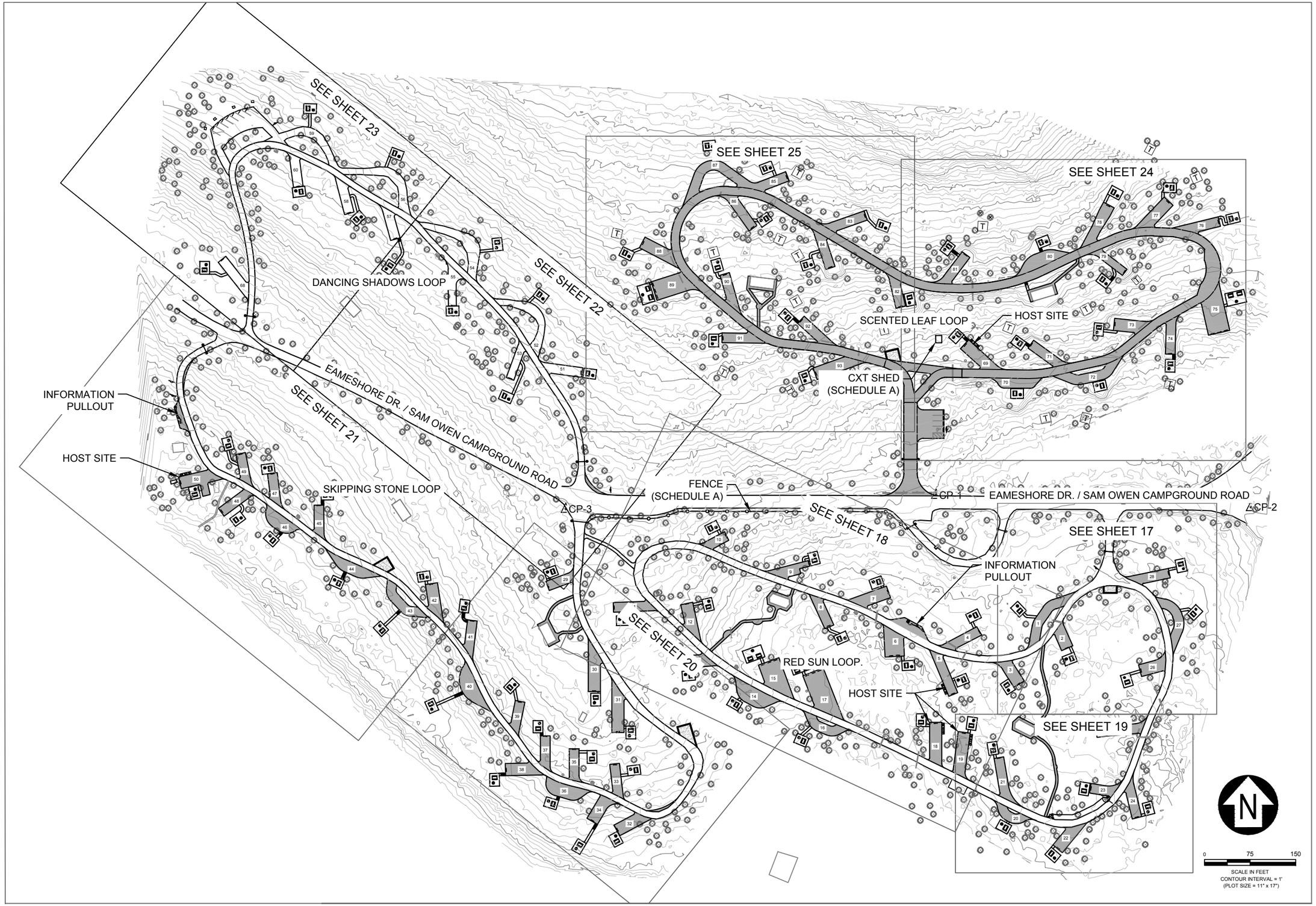

4/21/26 12:01 DANIEL.LEBSOCK C:\DJA-PW\WORK\DJA-PROD\DMS29121\7431 - SITE PLAN.DWG;

United States Department of Agriculture
Forest Service

REGION 1
NORTHERN REGION

PROJECT NAME

SAM OWEN CAMPGROUND IMPROVEMENTS

IDAHO PANHANDLE NATIONAL FORESTS

SANDPOINT RANGER DISTRICT

DRAWING TITLE

SITE IMPROVEMENT PLAN - KEY MAP

DATE
APRIL 2026

ARCHIVE NO.

DESIGNER
D. LEBSOCK

DRAWN
D. LEBSOCK

CHECKED
P. DRUYVESTEIN

PROJECT NO.
7431

DWG SHEET NO.
16

SHEET 16 OF 72

GENERAL NOTES

1. PLACE TOPSOIL ON DISTURBED AREAS AND PREPARE FOR SEEDING AND MULCHING.
2. INSTALL NEW SITE MARKERS PER DETAIL 2 ON SHEET 52. LOCATION TO BE STAKED IN THE FIELD BY THE CO.
3. INSTALL NEW FIRE RINGS AND PICNIC TABLES PER DETAIL 3 ON SHEET 52 AND DETAIL 1 ON SHEET 53. CAMP LIVING AREAS AND CONNECTOR PATHS TO BE STAKED AS SHOWN AND APPROVED BY CO.
4. SEE DETAIL 3 ON SHEET 54 FOR TYPICAL ASPHALT SECTION.
5. ALL EXISTING ASPHALT AS PART OF RED SUN, SKIPPING STONE, AND DANCING SHADOW CAMP LOOPS TO HAVE PRME SPRAY SEAL APPLIED BEGINNING AT JUNCTION WITH EAMESHORE DR.
6. CONTRACTOR TO SUBMIT SPLIT FACE PRIVACY WALL MATERIALS AND DESIGN FOR REVIEW BY CO PRIOR TO INSTALLATION OR CONSTRUCTION. SCHEDULE B.

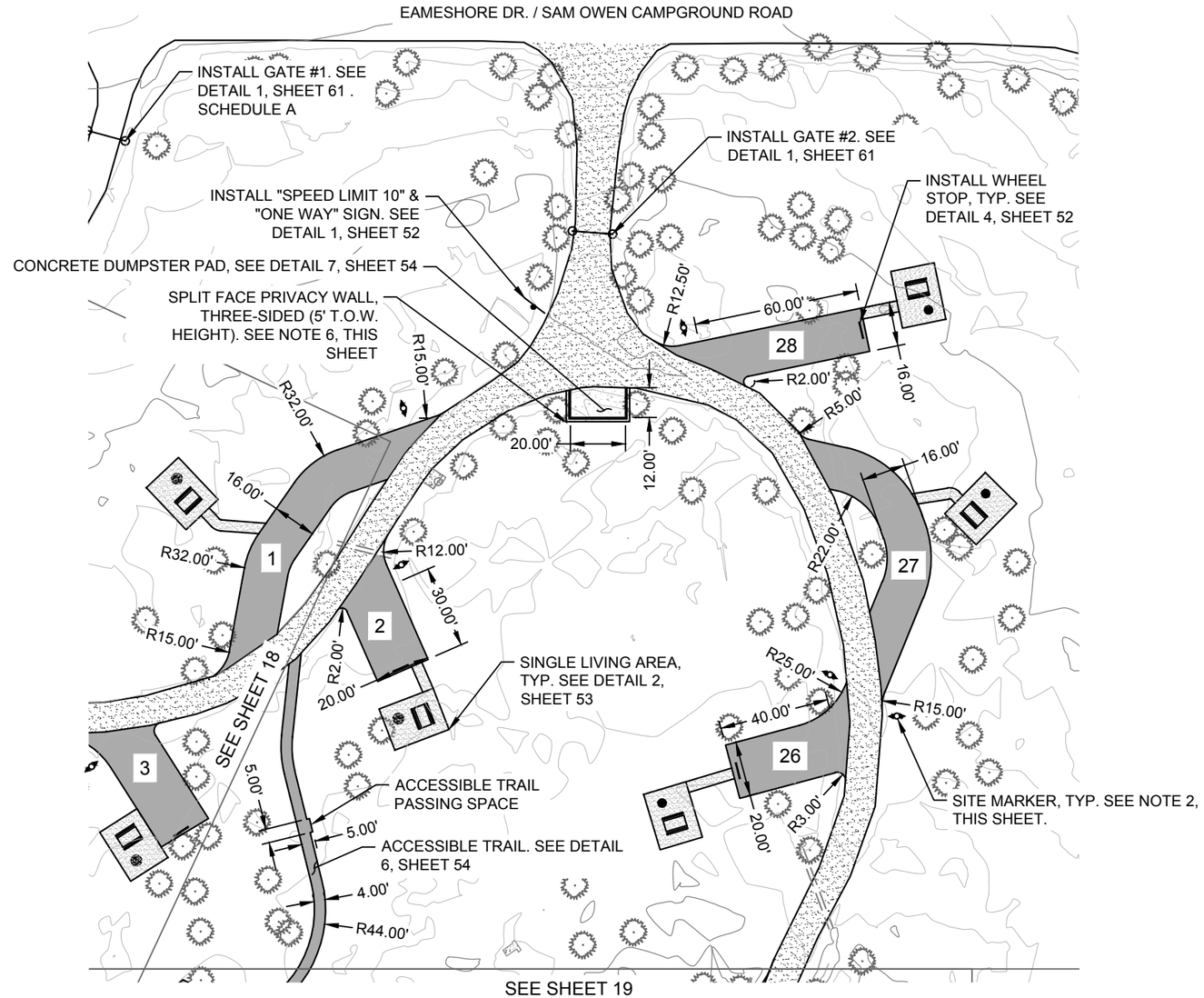

HATCH KEY:

- ASPHALT
- EXISTING ASPHALT TO HAVE PMRE APPLIED
- AGGREGATE SURFACE - CRUSHER FINES

0 25 50
SCALE IN FEET
CONTOUR INTERVAL = 1'
(PLOT SIZE = 11" x 17")

United States Department of Agriculture
Forest Service

REGION 1
NORTHERN REGION

PROJECT NAME

SAM OWEN CAMPGROUND IMPROVEMENTS

IDAHO PANHANDLE NATIONAL FORESTS

SANDPOINT RANGER DISTRICT

DRAWING TITLE

SITE PLAN RED SUN LOOP ENTRANCE - N.

DATE
APRIL 2026

ARCHIVE NO.

DESIGNER
D. LEBSOCK

DRAWN
D. LEBSOCK

CHECKED
P. DRUYVESTEIN

DWG SHEET NO.
17

PROJECT NO.
7431

SHEET 17 OF 72

4/21/26 12:01 DANIEL.LEBSOCK C:\DJA-PWWORK\DJA-PROD\DMS29121\7431 - SITE PLAN.DWG;

GENERAL NOTES

1. PLACE TOPSOIL ON DISTURBED AREAS AND PREPARE FOR SEEDING AND MULCHING.
2. INSTALL NEW SITE MARKERS PER DETAIL 2 ON SHEET 52. LOCATION TO BE STAKED IN THE FIELD BY THE CO.
3. INSTALL NEW FIRE RINGS AND PICNIC TABLES PER DETAIL 3 ON SHEET 52 AND DETAIL 1 ON SHEET 53. CAMP LIVING AREAS AND CONNECTOR PATHS TO BE STAKED AS SHOWN AND APPROVED BY CO.
4. REPLACE AND INSTALL ALL EXISTING HOST SITE UTILITY CONNECTIONS PER DETAILS ON SHEETS 55, 56, 57, & 58 IF SCHEDULE C IS SELECTED.
5. SEE DETAIL 3 ON SHEET 54 FOR TYPICAL ASPHALT SECTION.
6. ALL EXISTING ASPHALT AS PART OF RED SUN, SKIPPING STONE, AND DANCING SHADOW CAMP LOOPS TO HAVE PMRE SPRAY SEAL APPLIED BEGINNING AT JUNCTION WITH EAMESHORE DR.

HATCH KEY:

- ASPHALT
- EXISTING ASPHALT TO HAVE PMRE APPLIED
- AGGREGATE SURFACE - CRUSHER FINES

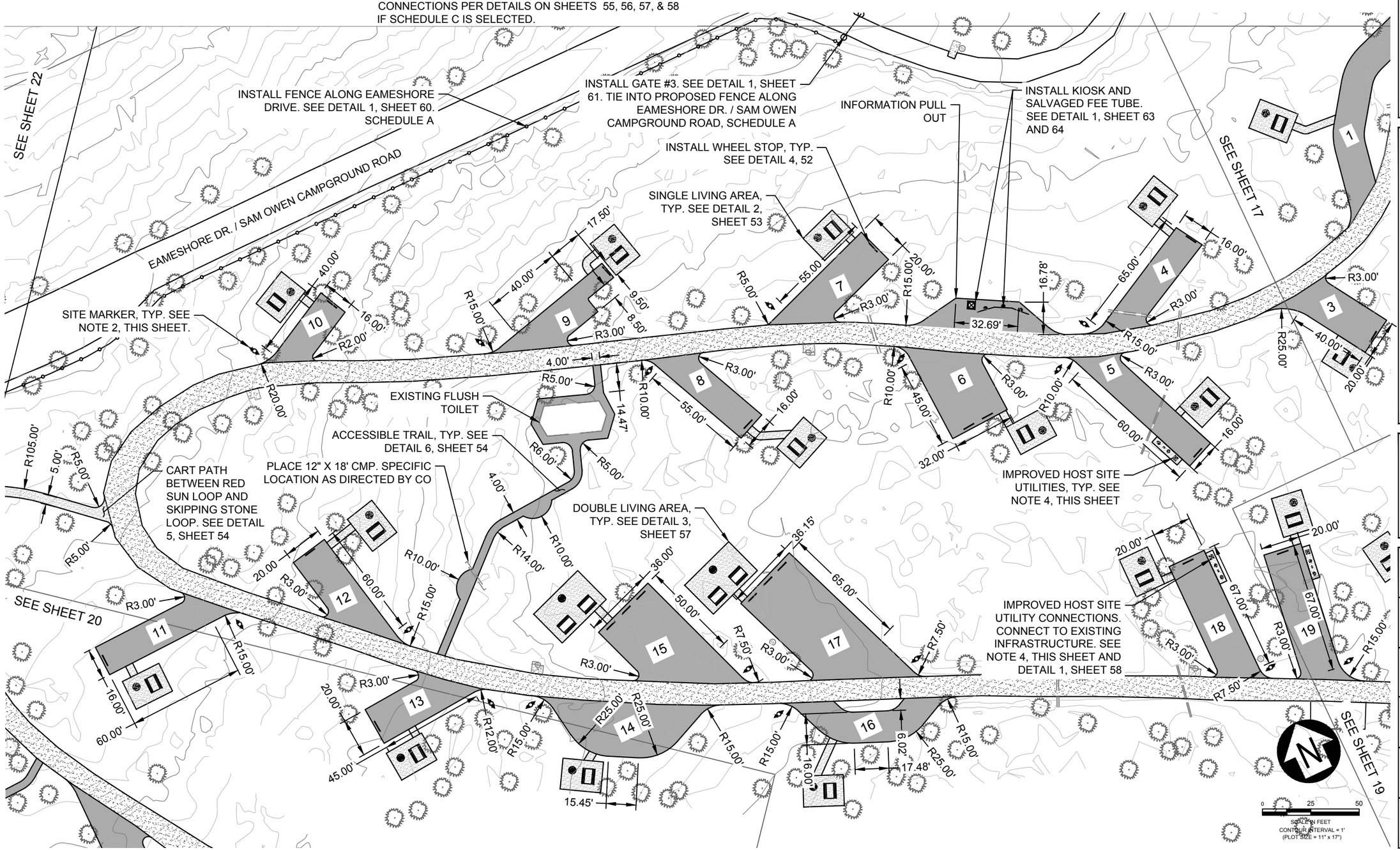

United States Department of Agriculture
Forest Service

REGION 1
NORTHERN REGION

PROJECT NAME

SAM OWEN CAMPGROUND IMPROVEMENTS

IDAHO PANHANDLE NATIONAL FORESTS

SANDPOINT RANGER DISTRICT

DRAWING TITLE

SITE PLAN RED SUN LOOP

DATE APRIL 2026	
ARCHIVE NO.	
DESIGNER D. LEBSOCK	DWG SHEET NO. 18
DRAWN D. LEBSOCK	
CHECKED P. DRUYVESTEIN	SHEET 18 OF 72
PROJECT NO. 7431	

4/21/26 12:01 DANIEL.LEBSOCK C:\DJA-PW\WORK\DJA-PROD\DMS29121\7431 - SITE PLAN.DWG;

GENERAL NOTES

1. PLACE TOPSOIL ON DISTURBED AREAS AND PREPARE FOR SEEDING AND MULCHING.
2. INSTALL NEW SITE MARKERS PER DETAIL 2 ON SHEET 52. LOCATION TO BE STAKED IN THE FIELD BY THE CO.
3. INSTALL NEW FIRE RINGS AND PICNIC TABLES PER DETAIL 3 ON SHEET 52 AND DETAIL 1 ON SHEET 53. CAMP LIVING AREAS AND CONNECTOR PATHS TO BE STAKED AS SHOWN AND APPROVED BY CO.
4. REPLACE ALL EXISTING HOST SITE UTILITY CONNECTIONS PER DETAILS ON SHEET 55, 56, 57 & 58 IF SCHEDULE C IS SELECTED.
5. SEE DETAIL 3 ON SHEET 54 FOR TYPICAL ASPHALT SECTION.
6. ALL EXISTING ASPHALT AS PART OF RED SUN, SKIPPING STONE, AND DANCING SHADOW CAMP LOOPS TO HAVE PMRE SPRAY SEAL APPLIED BEGINNING AT JUNCTION WITH EAMESHORE DR.

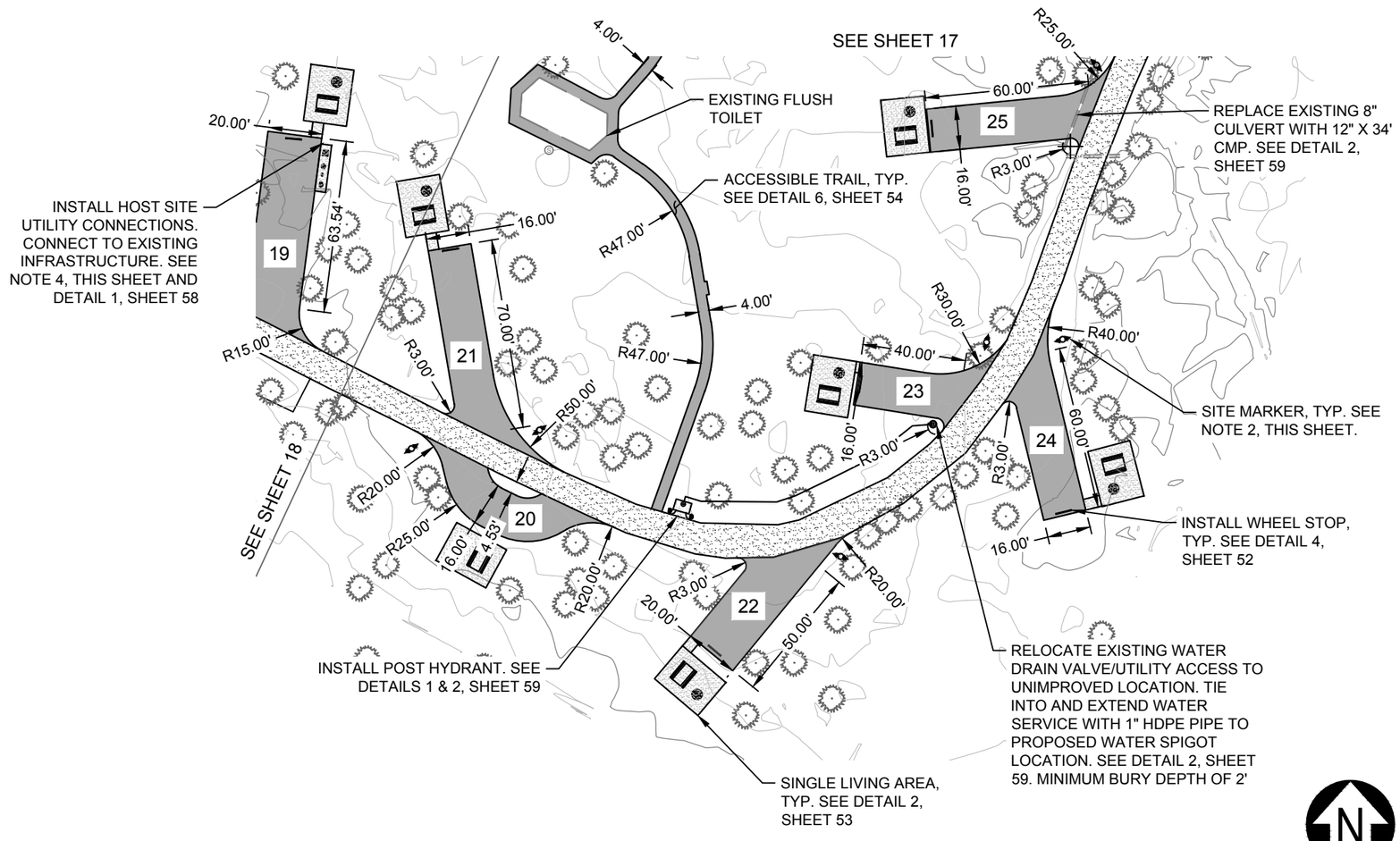

HATCH KEY:

- ASPHALT
- EXISTING ASPHALT TO PMRE APPLIED
- AGGREGATE SURFACE - CRUSHER FINES

United States Department of Agriculture
Forest Service

REGION 1
NORTHERN REGION

PROJECT NAME

SAM OWEN CAMPGROUND IMPROVEMENTS

IDAHO PANHANDLE NATIONAL FORESTS

SANDPOINT RANGER DISTRICT

DRAWING TITLE

SITE PLAN RED SUN LOOP ENTRANCE - S.

DATE APRIL 2026	
ARCHIVE NO.	
DESIGNER D. LEBSOCK	DWG SHEET NO. 19
DRAWN D. LEBSOCK	
CHECKED P. DRUYVESTEIN	SHEET 19 OF 72
PROJECT NO. 7431	

4/21/26 12:01 DANIEL LEBSOCK C:\DJA-PWWORK\DJA-PROD\DMS29121\7431 - SITE PLAN.DWG;

GENERAL NOTES

1. PLACE TOPSOIL ON DISTURBED AREAS AND PREPARE FOR SEEDING AND MULCHING.
2. INSTALL NEW SITE MARKERS PER DETAIL 2 ON SHEET 52. LOCATION TO BE STAKED IN THE FIELD BY THE CO.
3. INSTALL NEW FIRE RINGS AND PICNIC TABLES PER DETAIL 3 ON SHEET 52 AND DETAIL 1 ON SHEET 53. CAMP LIVING AREAS AND CONNECTOR PATHS TO BE STAKED AS SHOWN AND APPROVED BY CO.
4. SEE DETAIL 3 ON SHEET 54 FOR TYPICAL ASPHALT SECTION.
5. ALL EXISTING ASPHALT AS PART OF RED SUN, SKIPPING STONE, AND DANCING SHADOW CAMP LOOPS TO HAVE PMRE SPRAY SEAL APPLIED BEGINNING AT JUNCTION WITH EAMESHORE DR.
6. CONTRACTOR TO SUBMIT SPLIT FACE PRIVACY WALL MATERIALS AND DESIGN FOR REVIEW BY CO PRIOR TO INSTALLATION OR CONSTRUCTION. SCHEDULE B.

HATCH KEY:

- ASPHALT
- EXISTING ASPHALT TO HAVE PMRE APPLIED
- AGGREGATE SURFACE - CRUSHER FINES

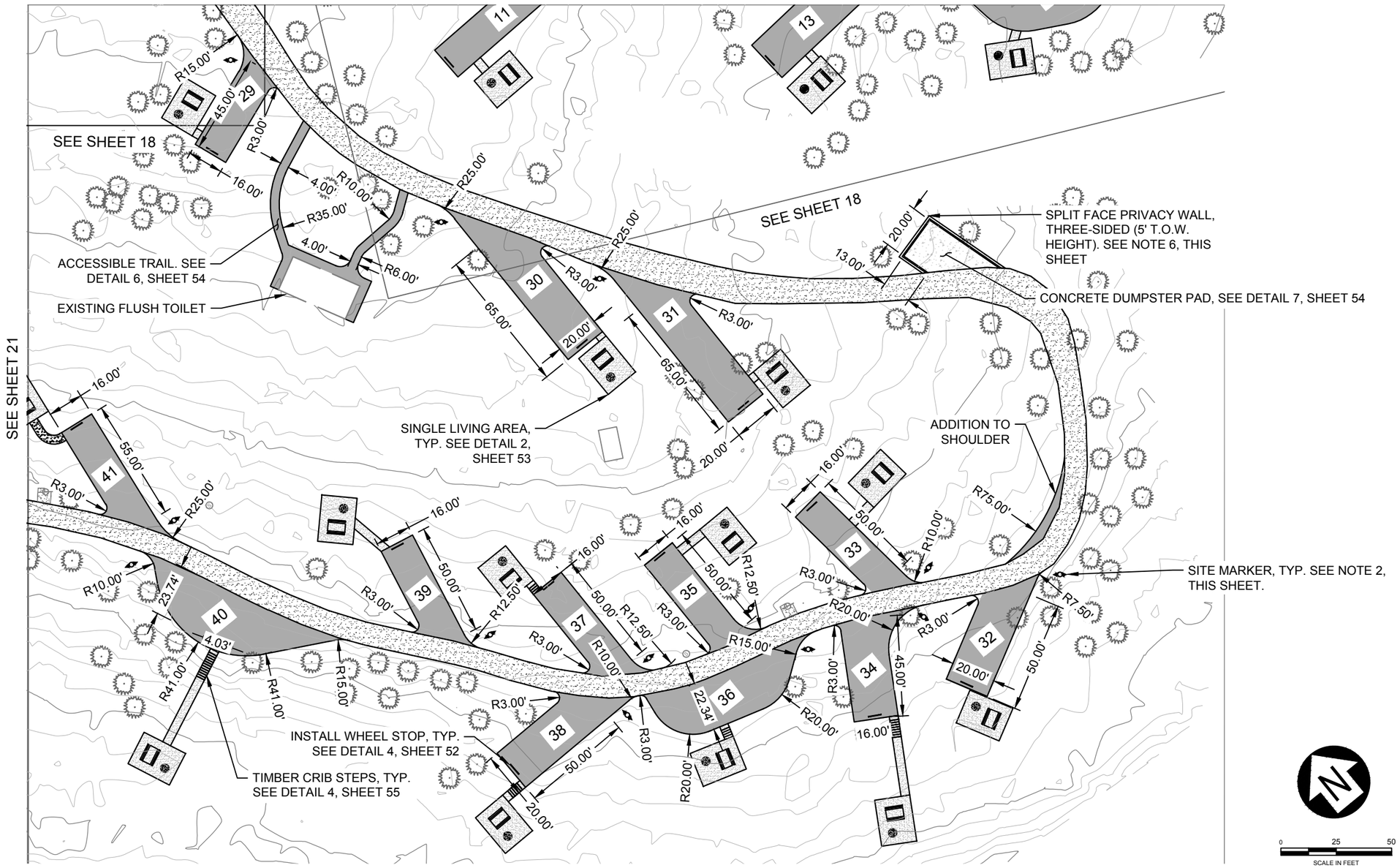

0 25 50
SCALE IN FEET
CONTOUR INTERVAL = 1'
(PLOT SIZE = 11" x 17")

United States Department of Agriculture
Forest Service

REGION 1
NORTHERN REGION

PROJECT NAME

SAM OWEN CAMPGROUND IMPROVEMENTS

IDAHO PANHANDLE NATIONAL FORESTS

SANDPOINT RANGER DISTRICT

DRAWING TITLE

SITE PLAN SKIPPING STONE LOOP - E.

DATE
APRIL 2026

ARCHIVE NO.

DESIGNER
D. LEBSOCK

DRAWN
D. LEBSOCK

CHECKED
P. DRUYVESTEIN

PROJECT NO.
7431

DWG SHEET NO.
20

SHEET 20 OF 72

4/21/26 12:01 DANIEL.LEBSOCK C:\DJA-PWWORK\DJA-PROD\DMS29121\7431 - SITE PLAN.DWG;

GENERAL NOTES

1. PLACE TOPSOIL ON DISTURBED AREAS AND PREPARE FOR SEEDING AND MULCHING.
2. INSTALL NEW SITE MARKERS PER DETAIL 2 ON SHEET 52. LOCATION TO BE STAKED IN THE FIELD BY THE CO.
3. INSTALL NEW FIRE RINGS AND PICNIC TABLES PER DETAIL 3 ON SHEET 52 AND DETAIL 1 ON SHEET 53. CAMP LIVING AREAS AND CONNECTOR PATHS TO BE STAKED AS SHOWN AND APPROVED BY CO.
4. REPLACE ALL EXISTING HOST SITE UTILITY CONNECTIONS PER DETAILS ON SHEET 55, 56, 57 & 58.
5. SEE DETAIL 3 ON SHEET 54 FOR TYPICAL ASPHALT SECTION.
6. ALL EXISTING ASPHALT AS PART OF RED SUN, SKIPPING STONE, AND DANCING SHADOW CAMP LOOPS TO HAVE PMRE SPRAY SEAL APPLIED BEGINNING AT JUNCTION WITH EAMESHORE DR.
7. CONTRACTOR TO SUBMIT SPLIT FACE PRIVACY WALL MATERIALS AND DESIGN FOR REVIEW BY CO PRIOR INSTALLATION OR CONSTRUCTION.

HATCH KEY:

- ASPHALT
- EXISTING ASPHALT TO HAVE PMRE APPLIED
- AGGREGATE SURFACE - CRUSHER FINES

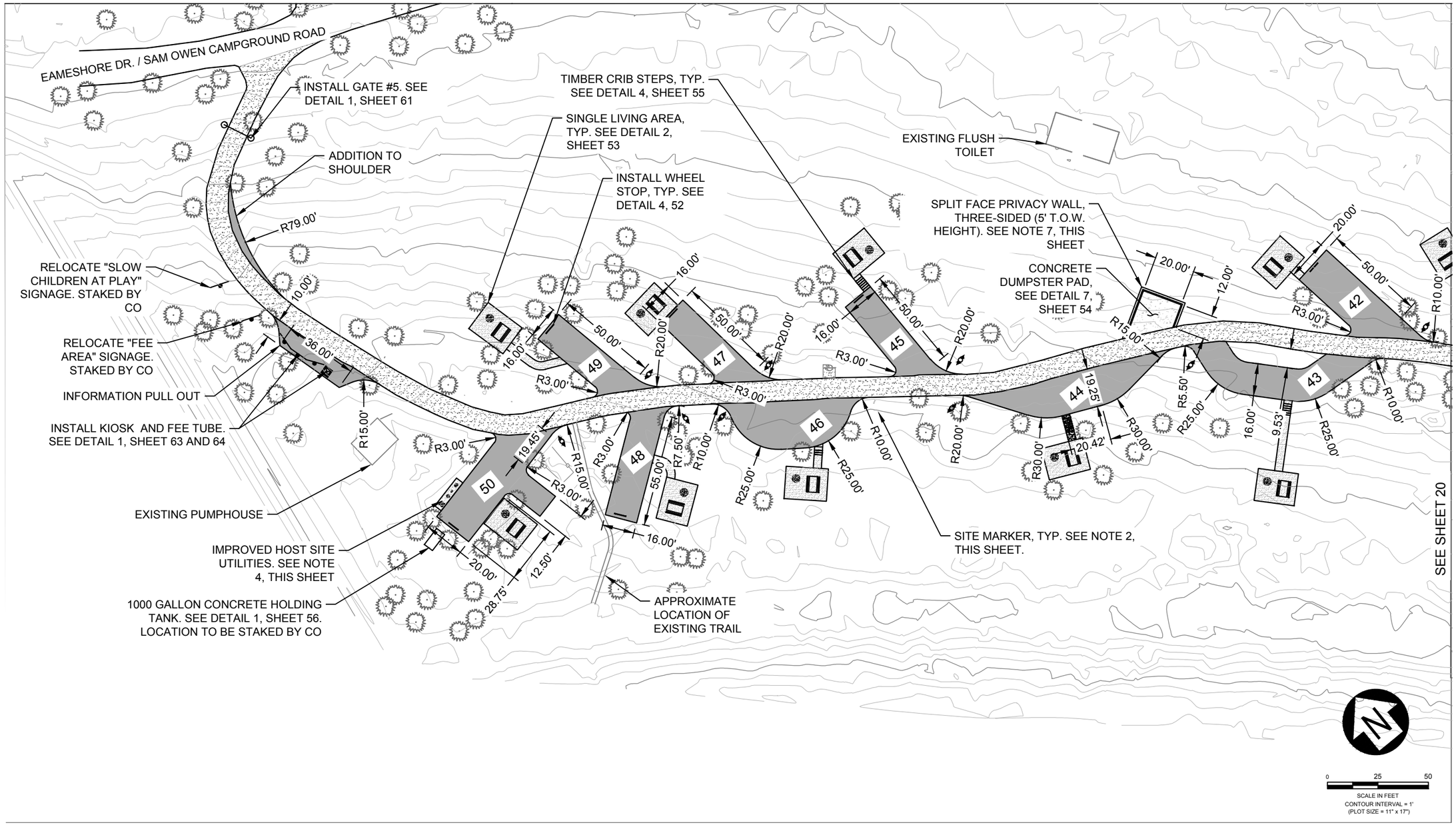

United States Department of Agriculture
Forest Service

REGION 1
NORTHERN REGION

PROJECT NAME

SAM OWEN CAMPGROUND IMPROVEMENTS

IDAHO PANHANDLE NATIONAL FORESTS

SANDPOINT RANGER DISTRICT

DRAWING TITLE

SITE PLAN SKIPPING STONE LOOP - W.

DATE
APRIL 2026

ARCHIVE NO.

DESIGNER
D. LEBSOCK

DRAWN
D. LEBSOCK

CHECKED
P. DRUYVESTEIN

PROJECT NO.
7431

DWG SHEET NO.
21

SHEET 21 OF 72

4/21/26 12:01 DANIEL.LEBSOCK C:\DJA-PWWORK\DJA-PROD\DMS29121\7431 - SITE PLAN.DWG;

GENERAL NOTES

1. PLACE TOPSOIL ON DISTURBED AREAS AND PREPARE FOR SEEDING AND MULCHING.
2. INSTALL NEW SITE MARKERS PER DETAIL 2 ON SHEET 52. LOCATION TO BE STAKED IN THE FIELD BY THE CO.
3. INSTALL NEW FIRE RINGS AND PICNIC TABLES PER DETAIL 3 ON SHEET 52 AND DETAIL 1 ON SHEET 53. CAMP LIVING AREAS AND CONNECTOR PATHS TO BE STAKED AS SHOWN AND APPROVED BY CO.
4. SEE DETAIL 4 ON SHEET 54 FOR TYPICAL SURFACE AGGREGATE SECTION.
5. ALL EXISTING ASPHALT AS PART OF RED SUN, SKIPPING STONE, AND DANCING SHADOW CAMP LOOPS TO HAVE PMRE SPRAY SEAL APPLIED BEGINNING AT JUNCTION WITH EAMESHORE DR.

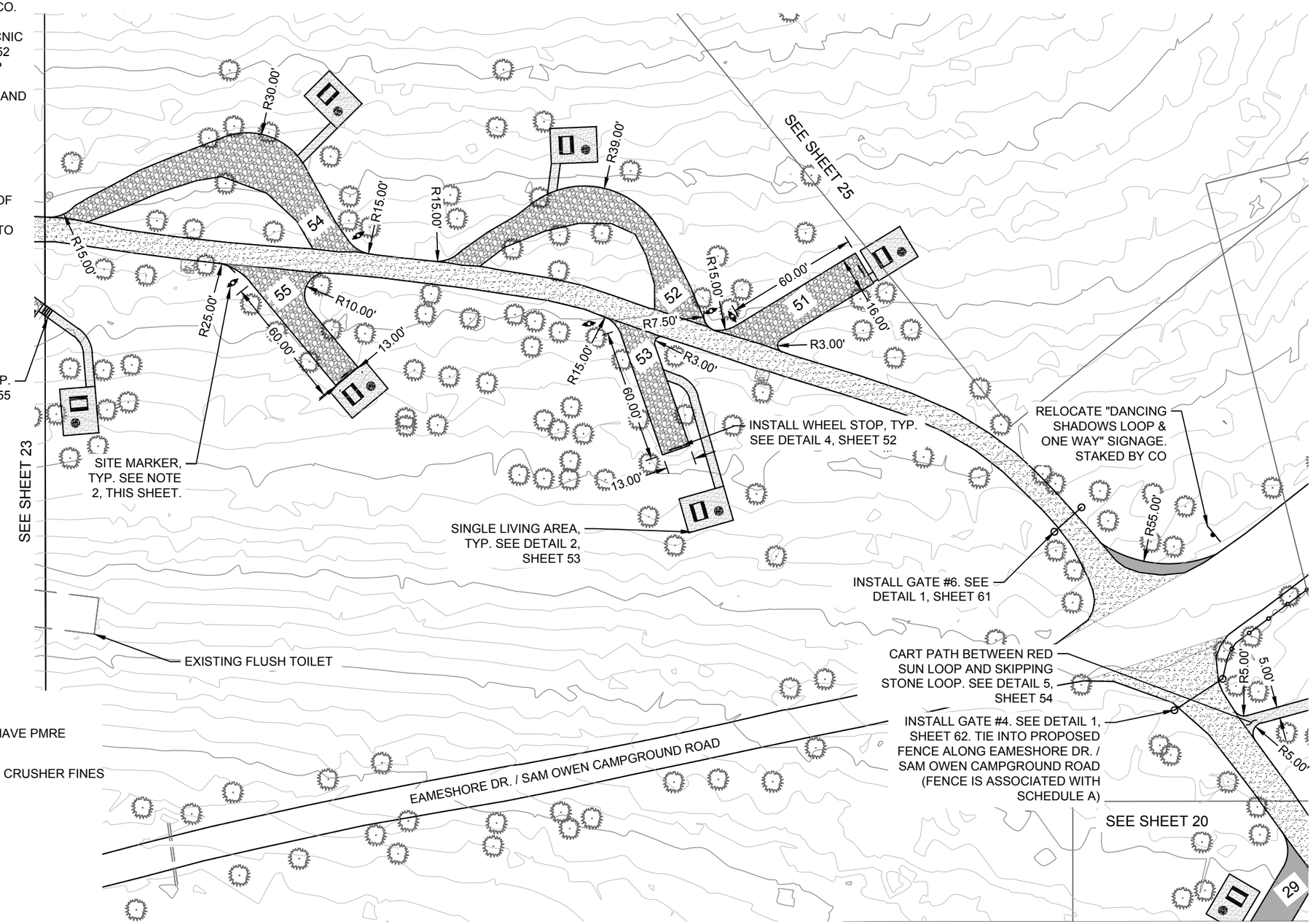

HATCH KEY:

- SURFACE AGGREGATE
- EXISTING ASPHALT TO HAVE PMRE APPLIED
- AGGREGATE SURFACE - CRUSHER FINES

0 25 50
SCALE IN FEET
CONTOUR INTERVAL = 1'
(PLOT SIZE = 11" x 17")

4/21/26 12:01 DANIEL.LEBSOCK C:\DJA-PWWORK\DJA-PROD\DMS29121\7431 - SITE PLAN.DWG;

USDA FOREST SERVICE

United States Department of Agriculture
Forest Service

REGION 1
NORTHERN REGION

PROJECT NAME

SAM OWEN CAMPGROUND IMPROVEMENTS

IDAHO PANHANDLE NATIONAL FORESTS

SANDPOINT RANGER DISTRICT

DRAWING TITLE

SITE PLAN DANCING SHADOWS LOOP - E.

DATE
APRIL 2026

ARCHIVE NO.

DESIGNER	DWG SHEET NO.
D. LEBSOCK	22
DRAWN D. LEBSOCK	
CHECKED P. DRUYVESTEIN	
PROJECT NO. 7431	SHEET 22 OF 72

GENERAL NOTES

1. PLACE TOPSOIL ON DISTURBED AREAS AND PREPARE FOR SEEDING AND MULCHING.
2. INSTALL NEW SITE MARKERS PER DETAIL 2 ON SHEET 52. LOCATION TO BE STAKED IN THE FIELD BY THE CO.
3. INSTALL NEW FIRE RINGS AND PICNIC TABLES PER DETAIL 3 ON SHEET 52 AND DETAIL 1 ON SHEET 53. CAMP LIVING AREAS AND CONNECTOR PATHS TO BE STAKED AS SHOWN AND APPROVED BY CO.
4. SEE DETAIL 4 ON SHEET 54 FOR TYPICAL SURFACE AGGREGATE SECTION.
5. ALL EXISTING ASPHALT AS PART OF RED SUN, SKIPPING STONE, AND DANCING SHADOW CAMP LOOPS TO HAVE PMRE SPRAY SEAL APPLIED BEGINNING AT JUNCTION WITH EAMESHORE DR.
6. WALK-IN SITES AND TRAILS TO WALK-IN SITES ARE NOT PART OF THIS PROJECT.

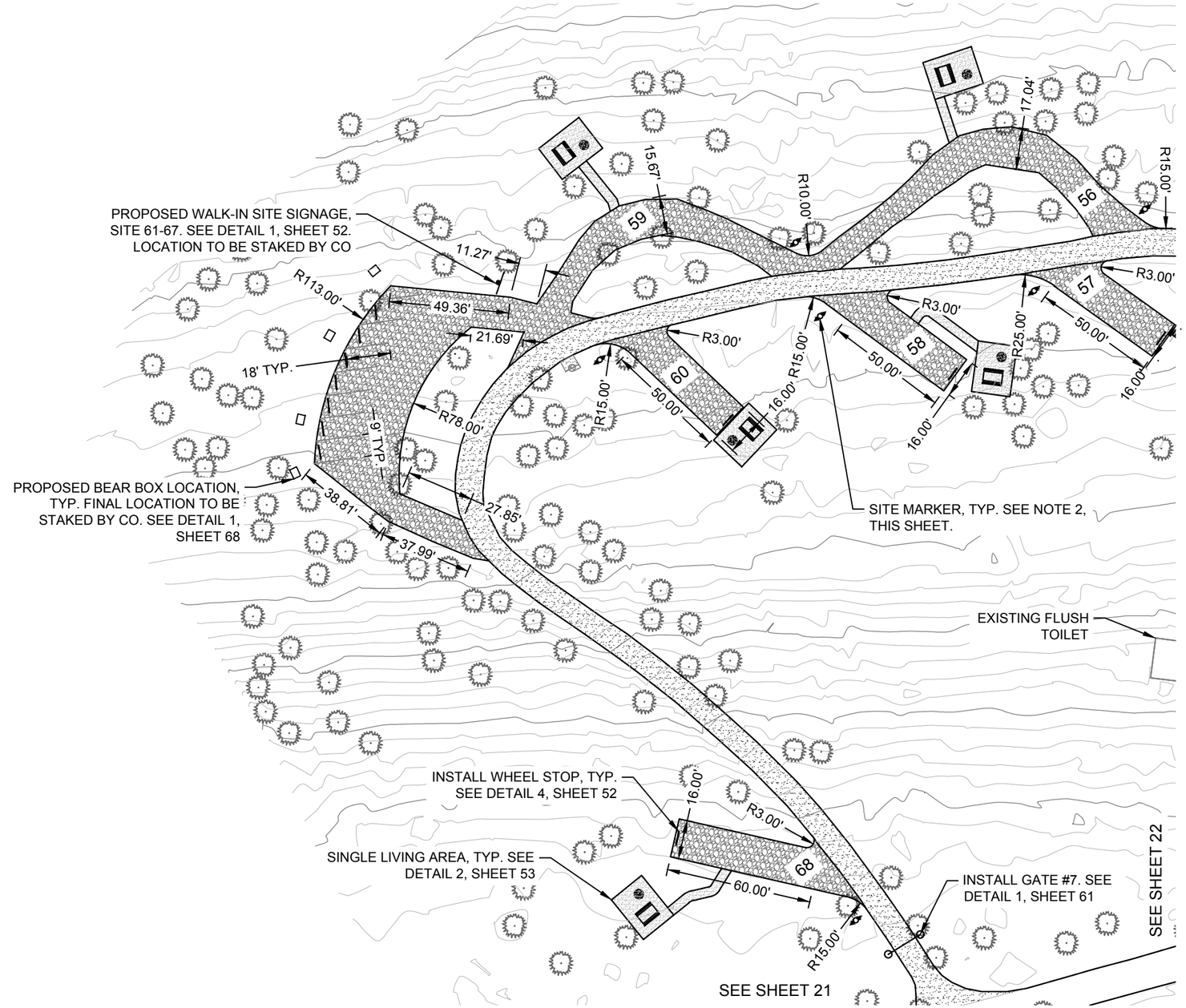

HATCH KEY:

- SURFACE AGGREGATE
- EXISTING ASPHALT TO HAVE PMRE APPLIED
- AGGREGATE SURFACE - CRUSHER FINES

0 25 50

SCALE IN FEET
CONTOUR INTERVAL = 1'
(PLOT SIZE = 11" x 17")

United States Department of Agriculture
Forest Service

REGION 1
NORTHERN REGION

PROJECT NAME

SAM OWEN CAMPGROUND IMPROVEMENTS

IDAHO PANHANDLE NATIONAL FORESTS

SANDPOINT RANGER DISTRICT

DRAWING TITLE

SITE PLAN DANCING SHADOWS LOOP - W.

DATE
APRIL 2026

ARCHIVE NO.

DESIGNER
D. LEBSOCK

DRAWN
D. LEBSOCK

CHECKED
P. DRUYVESTEIN

PROJECT NO.
7431

DWG SHEET NO.
23

SHEET 23 OF 72

4/21/26 12:01 DANIEL.LEBSOCK C:\DJA-PW\WORK\DJA-PROD\DMS29121\7431 - SITE PLAN.DWG;

GENERAL NOTES

1. PLACE TOPSOIL ON DISTURBED AREAS AND PREPARE FOR SEEDING AND MULCHING.
2. INSTALL NEW SITE MARKERS PER DETAIL 2 ON SHEET 52. LOCATION TO BE STAKED IN THE FIELD BY THE CO.
3. INSTALL NEW FIRE RINGS AND PICNIC TABLES PER DETAIL 3 ON SHEET 52 AND DETAIL 1 ON SHEET 53. CAMP LIVING AREAS AND CONNECTOR PATHS TO BE STAKED AS SHOWN AND APPROVED BY CO.
4. REPLACE ALL EXISTING HOST SITE UTILITY CONNECTIONS PER DETAILS ON SHEET 55, 56, 57, & 58 IF SCHEDULE C IS SELECTED.
5. SEE SHEETS 26 - 33 FOR SCENTED LEAF LOOP PLAN AND PROFILE INFORMATION.

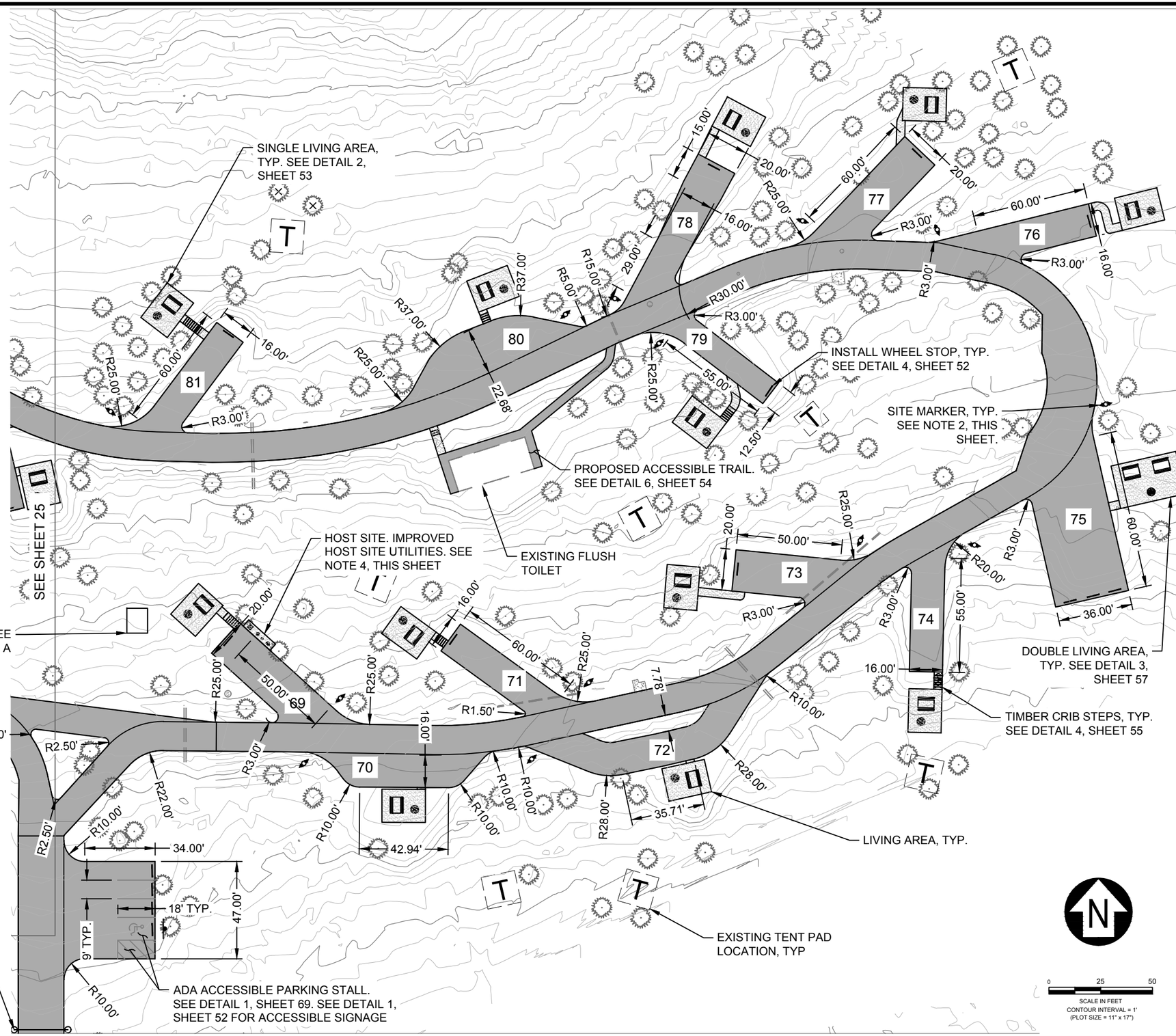
SINGLE LIVING AREA, TYP. SEE DETAIL 2, SHEET 53
INSTALL WHEEL STOP, TYP. SEE DETAIL 4, SHEET 52
SITE MARKER, TYP. SEE NOTE 2, THIS SHEET.
PROPOSED ACCESSIBLE TRAIL. SEE DETAIL 6, SHEET 54
EXISTING FLUSH TOILET
HOST SITE. IMPROVED HOST SITE UTILITIES. SEE NOTE 4, THIS SHEET
SEE SHEET 25
10.5' X 12' CXT SHED LOCATION. SEE DETAIL SHEETS 65, 66, & 67. SCHEDULE A
DOUBLE LIVING AREA, TYP. SEE DETAIL 3, SHEET 57
TIMBER CRIB STEPS, TYP. SEE DETAIL 4, SHEET 55
LIVING AREA, TYP.
EXISTING TENT PAD LOCATION, TYP
INSTALL DOUBLE SWING GATE. SEE DETAIL 1, SHEET 62
ADA ACCESSIBLE PARKING STALL. SEE DETAIL 1, SHEET 69. SEE DETAIL 1, SHEET 52 FOR ACCESSIBLE SIGNAGE
18' TYP.
9' TYP.
34.00'
47.00'
42.94'
35.71'
22.68'
7.78'
R1.50'
R2.50'
R3.00'
R10.00'
R20.00'
R22.00'
R25.00'
R28.00'
R30.00'
R37.00'
R5.00'
R15.00'
R25.00'
R3.00'
R3.00'
R3

GENERAL NOTES

1. PLACE TOPSOIL ON DISTURBED AREAS AND PREPARE FOR SEEDING AND MULCHING.
2. INSTALL NEW SITE MARKERS PER DETAIL 2 ON SHEET 52. LOCATION TO BE STAKED IN THE FIELD BY THE CO.
3. INSTALL NEW FIRE RINGS AND PICNIC TABLES PER DETAIL 3 ON SHEET 52 AND DETAIL 1 ON SHEET 53. CAMP LIVING AREAS AND CONNECTOR PATHS TO BE STAKED AS SHOWN AND APPROVED BY CO.
4. SEE SHEETS 26 - 33 FOR SCENTED LEAF LOOP PLAN AND PROFILE INFORMATION.
5. CONTRACTOR TO SUBMIT SPLIT FACE PRIVACY WALL MATERIALS AND DESIGN FOR REVIEW BY CO PRIOR TO INSTALLATION OR CONSTRUCTION. SCHEDULE B.

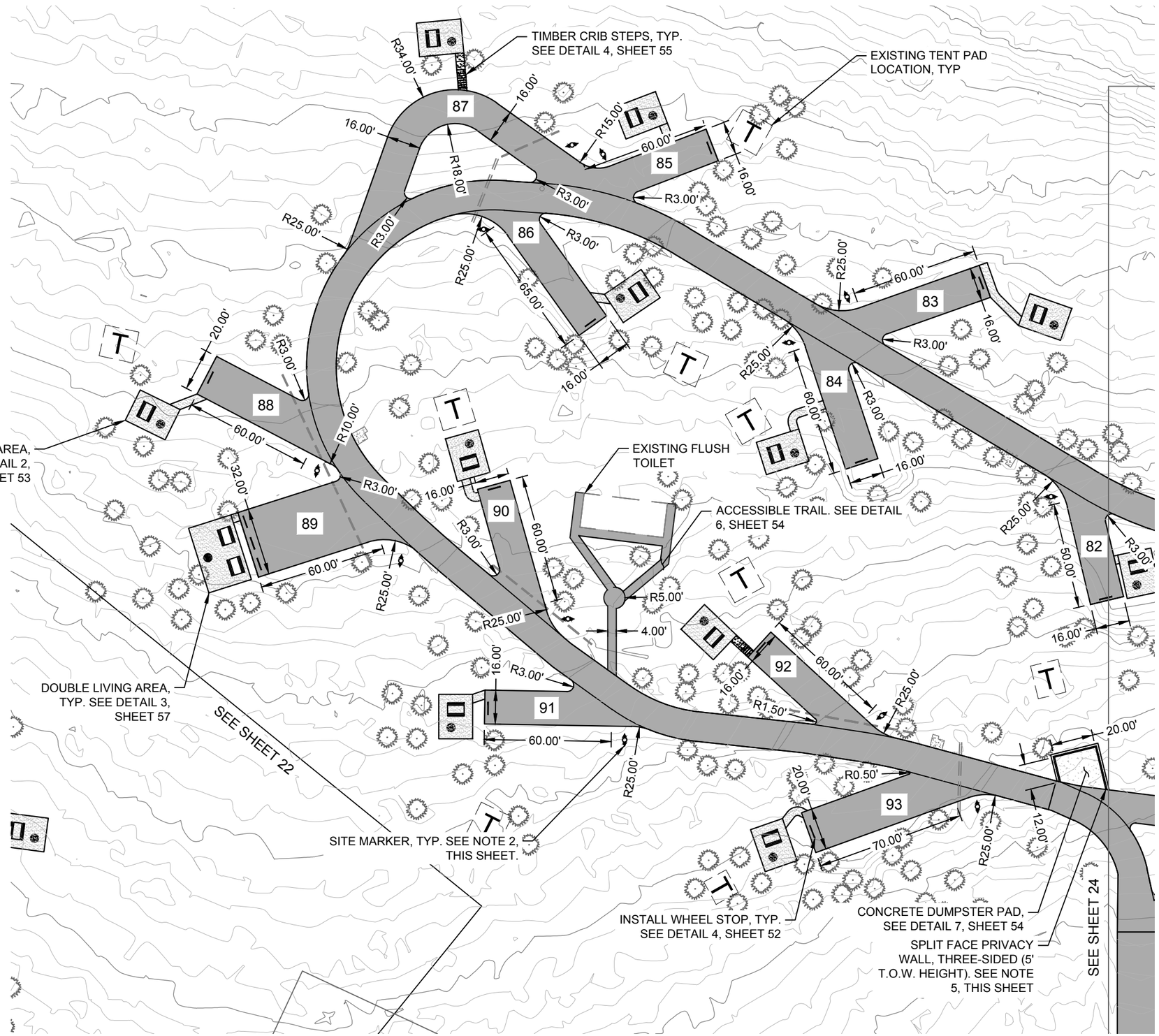

HATCH KEY:

ASPHALT

AGGREGATE SURFACE - CRUSHER FINES

N

0 25 50

SCALE IN FEET
CONTOUR INTERVAL = 1'
(PLOT SIZE = 11" x 17")

4/21/26 12:01 DANIEL.LEBSOCK C:\DJA-PWWORK\DJA-PROD\DMS29121\7431 - SITE PLAN.DWG;

USDA

United States Department of Agriculture
Forest Service

REGION 1
NORTHERN REGION

PROJECT NAME

SAM OWEN CAMPGROUND IMPROVEMENTS

IDAHO PANHANDLE NATIONAL FORESTS

SANDPOINT RANGER DISTRICT

DRAWING TITLE

SITE PLAN SCENTED LEAF LOOP - W.

DATE
APRIL 2026

ARCHIVE NO.

DESIGNER
D. LEBSOCK

DRAWN
D. LEBSOCK

CHECKED
P. DRUYVESTEIN

DWG SHEET NO.
25

PROJECT NO.
7431

SHEET 25 OF 72

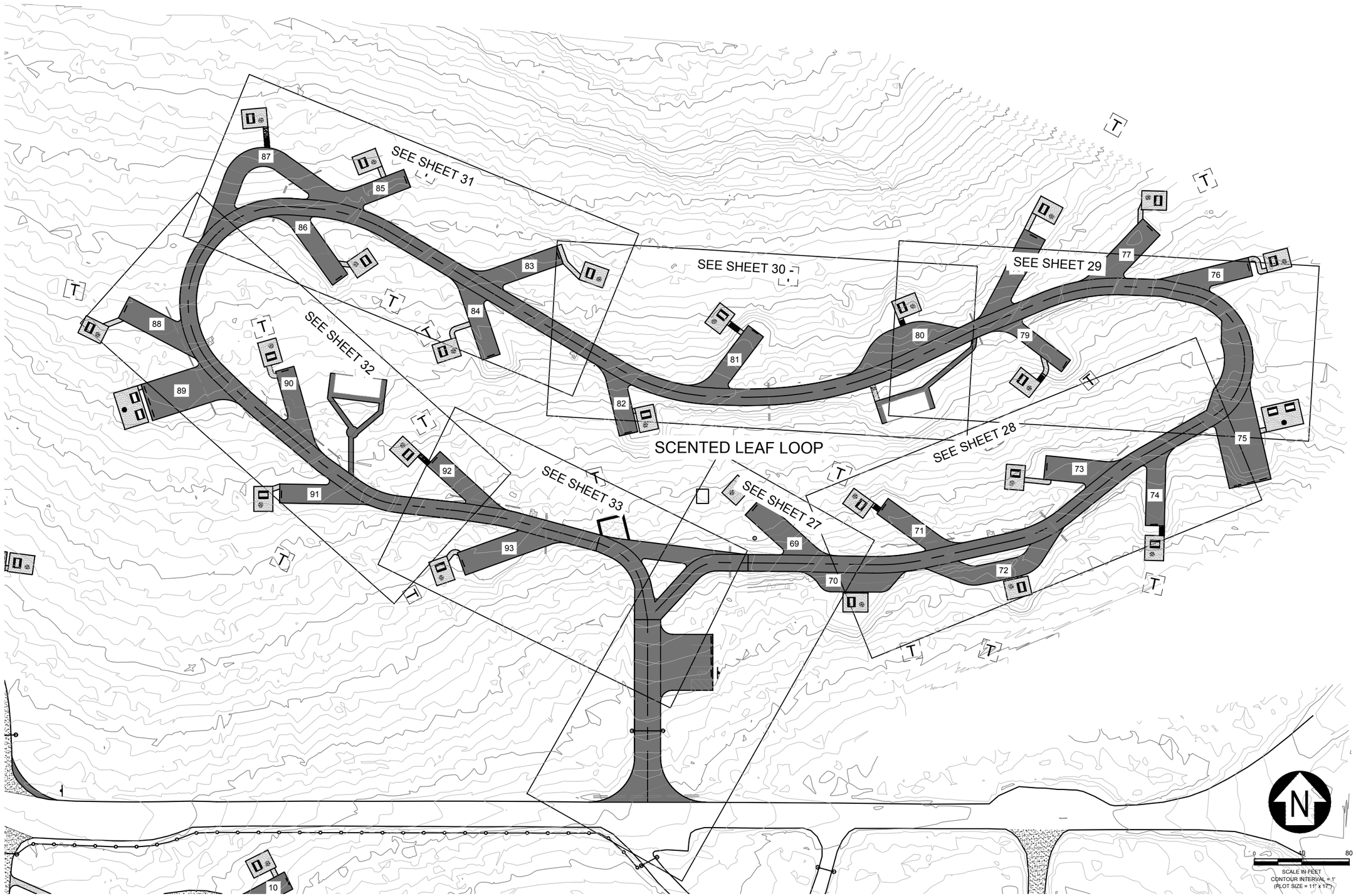

4/21/26 14:48 DANIEL.LEBSOCK C:\DJA-PWWORK\DJA-PROD\DMS29121\7431 - ROADWAY PLAN AND PROFILE.DWG;

United States Department of Agriculture
Forest Service

REGION #1
NORTHERN REGION

PROJECT NAME

SAM OWEN CAMPGROUND IMPROVEMENTS

IDAHO PANHANDLE NATIONAL FOREST

SANDPOINT RANGER DISTRICT

DRAWING TITLE

ROADWAY PLAN & PROFILE - KEY MAP

DATE
APRIL 2026

ARCHIVE NO.

DESIGNER
D. LEBSOCK

DRAWN
D. LEBSOCK

CHECKED
P. DRUYVESTEIN

PROJECT NO.
7431

DWG SHEET NO.
26

SHEET 26 OF 72

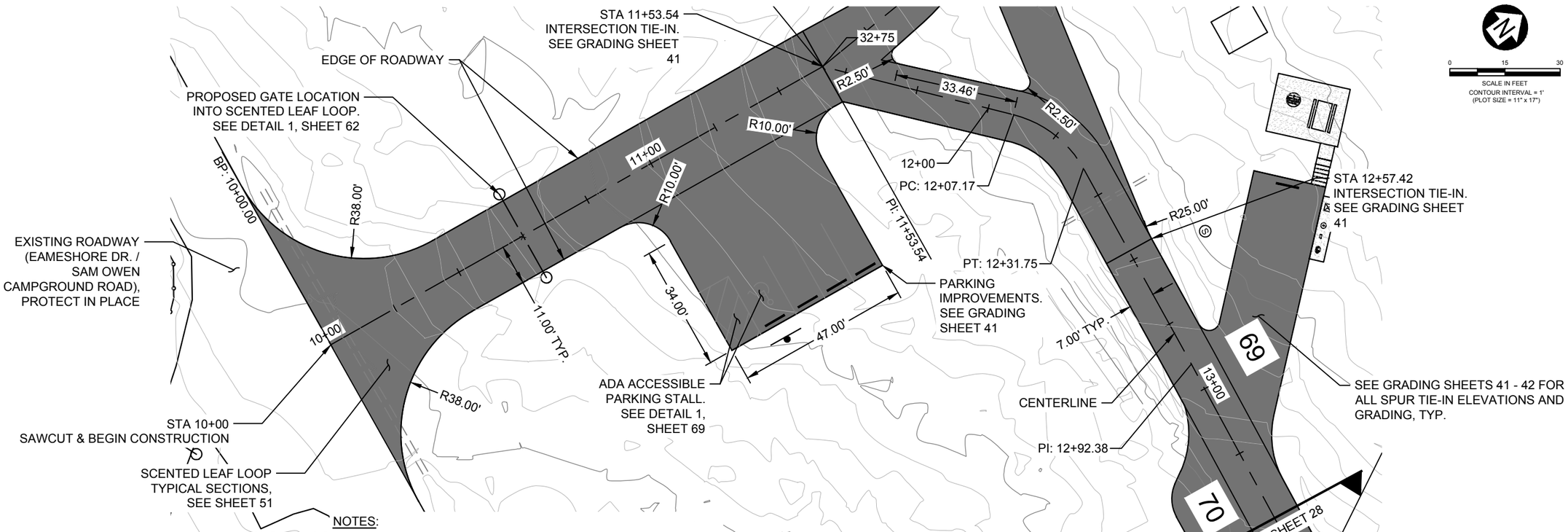

NOTES:

1. ANY SOFT SPOTS ENCOUNTERED DURING CONSTRUCTION ARE TO BE BROUGHT TO THE ATTENTION OF THE CO. ADDITIONAL GRAVEL USED TO REPAIR SOFT SPOT AREAS WILL BE CHARGED AS SHOWN IN THE BID SCHEDULE OR AS APPROVED BY THE CO PRIOR TO PLACEMENT.

PLAN

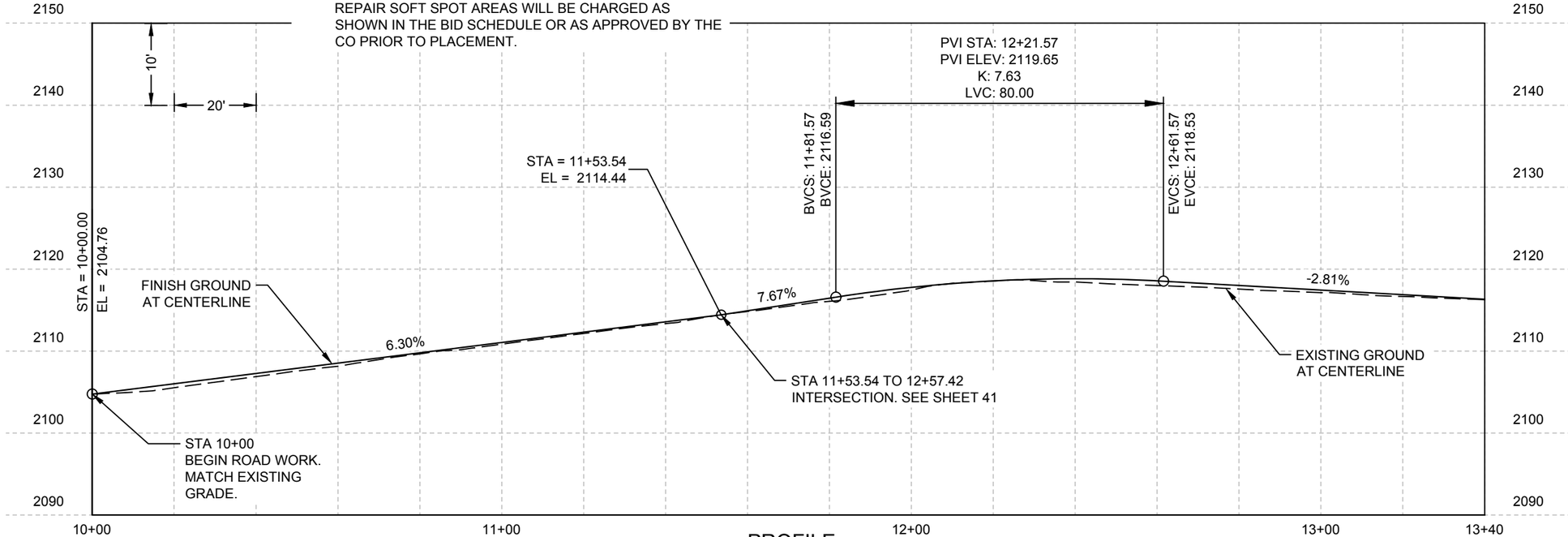

PROFILE

United States Department of Agriculture
Forest Service

REGION #1
NORTHERN REGION

PROJECT NAME

SAM OWEN CAMPGROUND IMPROVEMENTS

IDAHO PANHANDLE NATIONAL FORESTS

SANDPOINT RANGER DISTRICT

DRAWING TITLE

ROADWAY PLAN & PROFILE - SCENTED LEAF LOOP

DATE
APRIL 2026

ARCHIVE NO.

DESIGNER
D. LEBSOCK

DRAWN
D. LEBSOCK

CHECKED
P. DRUYVESTEIN

PROJECT NO.
7431

DWG SHEET NO.
27

SHEET 27 OF 72

4/21/26 14:48 DANIEL.LEBSOCK C:\DJA-PWWORK\DJA-PROD\DMS29121\7431 - ROADWAY PLAN AND PROFILE.DWG;

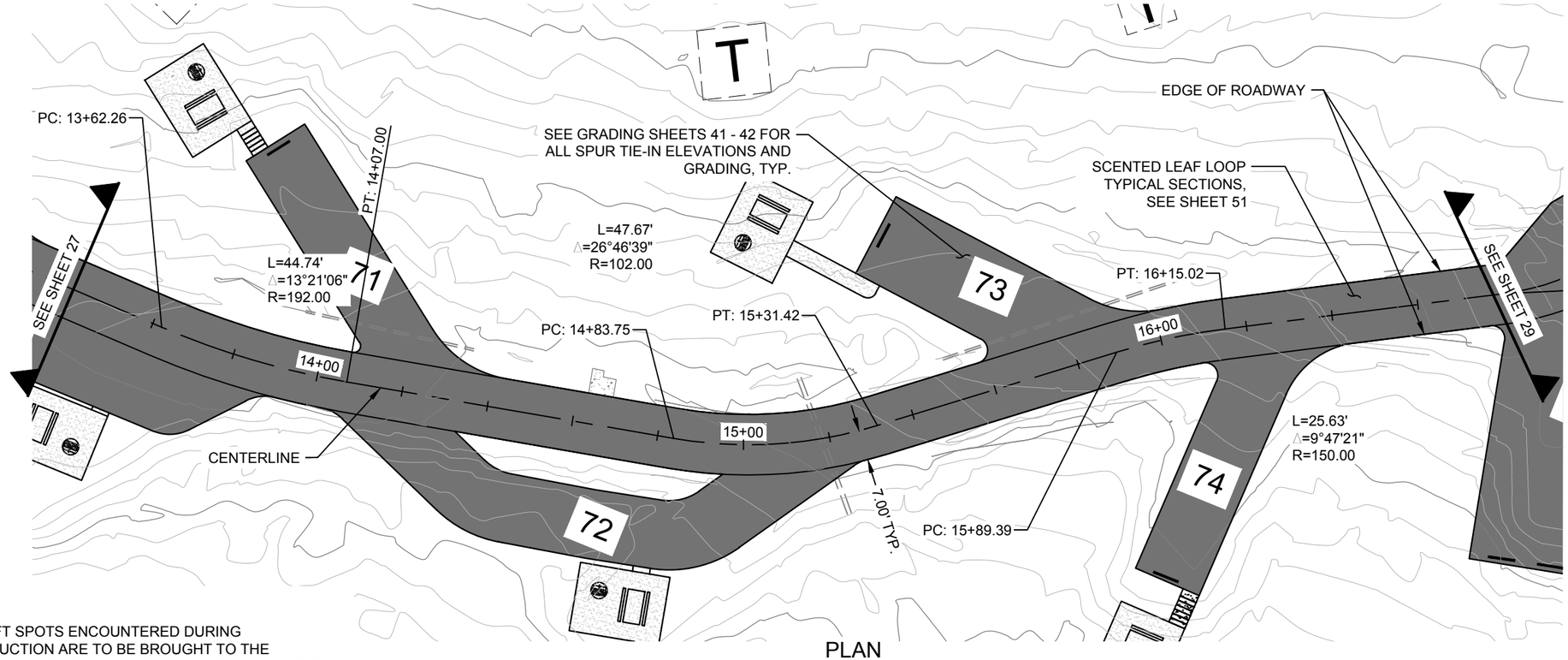

PLAN

NOTES:

1. ANY SOFT SPOTS ENCOUNTERED DURING CONSTRUCTION ARE TO BE BROUGHT TO THE ATTENTION OF THE CO. ADDITIONAL GRAVEL USED TO REPAIR SOFT SPOT AREAS WILL BE CHARGED AS SHOWN IN THE BID SCHEDULE OR AS APPROVED BY THE CO PRIOR TO PLACEMENT.

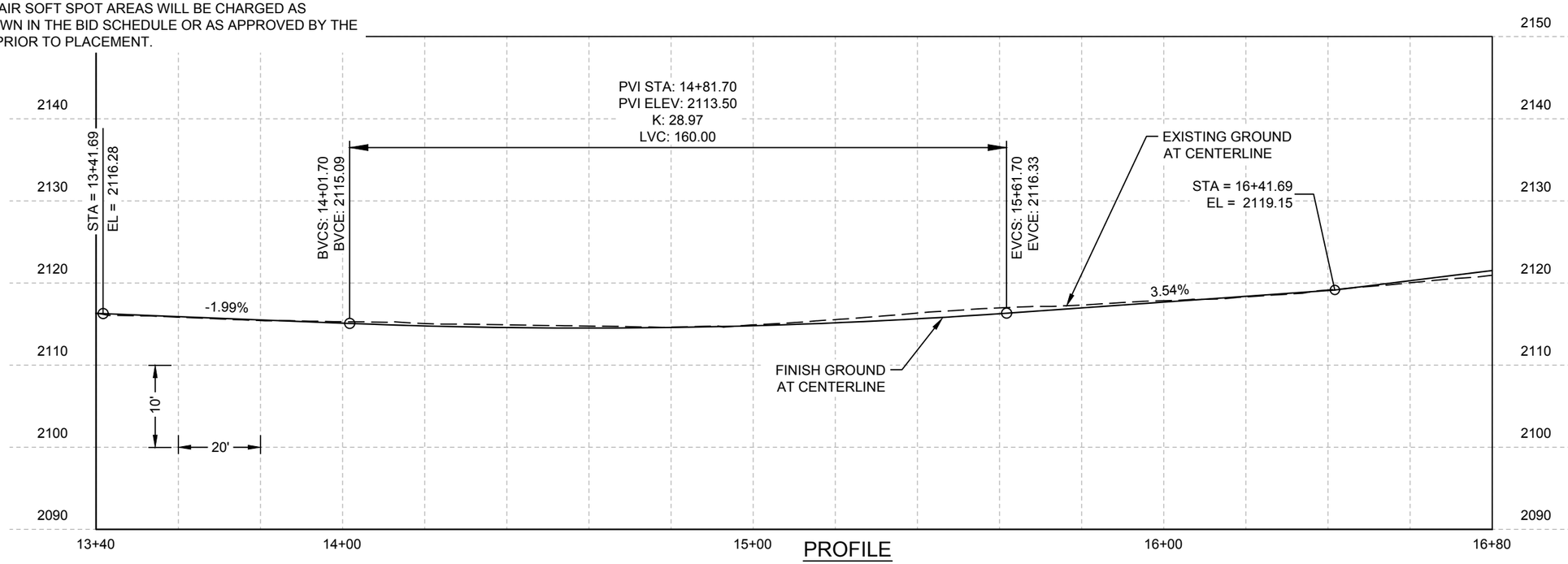

PROFILE

0 15 30
SCALE IN FEET
CONTOUR INTERVAL = 1'
(PLOT SIZE = 11" x 17")

United States Department of Agriculture
Forest Service

REGION #1
NORTHERN REGION

PROJECT NAME

SAM OWEN CAMPGROUND IMPROVEMENTS

IDAHO PANHANDLE NATIONAL FORESTS

SANDPOINT RANGER DISTRICT

DRAWING TITLE

ROADWAY PLAN & PROFILE - SCENTED LEAF LOOP

DATE
APRIL 2026

ARCHIVE NO.

DESIGNER
D. LEBSOCK

DRAWN
D. LEBSOCK

CHECKED
P. DRUYVESTEIN

PROJECT NO.
7431

DWG SHEET NO.
28

SHEET 28 OF 72

4/21/26 14:48 DANIEL.LEBSOCK C:\DJA-PWWORK\DJA-PROD\DMS29121\7431 - ROADWAY PLAN AND PROFILE.DWG;

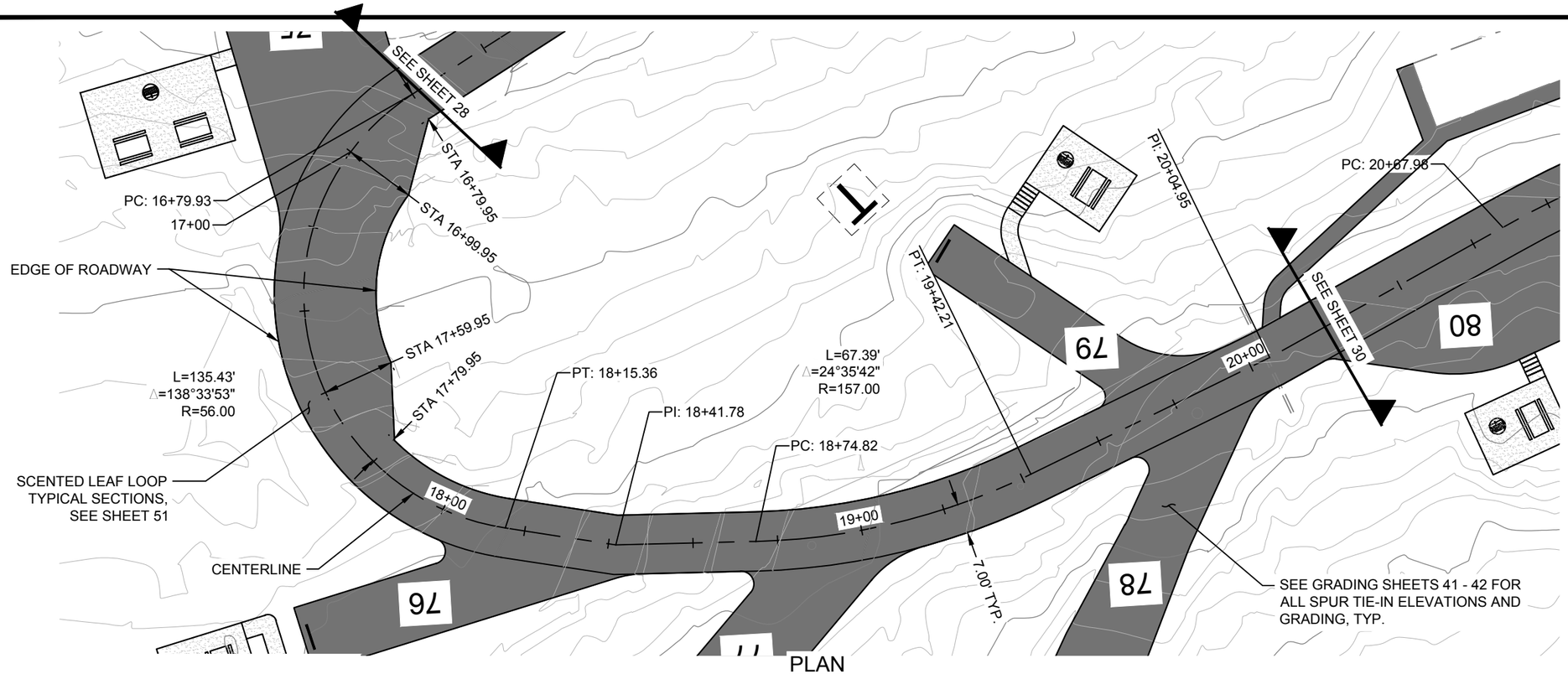

PLAN

NOTES:

1. ANY SOFT SPOTS ENCOUNTERED DURING CONSTRUCTION ARE TO BE BROUGHT TO THE ATTENTION OF THE CO. ADDITIONAL GRAVEL USED TO REPAIR SOFT SPOT AREAS WILL BE CHARGED AS SHOWN IN THE BID SCHEDULE OR AS APPROVED BY THE CO PRIOR TO PLACEMENT.

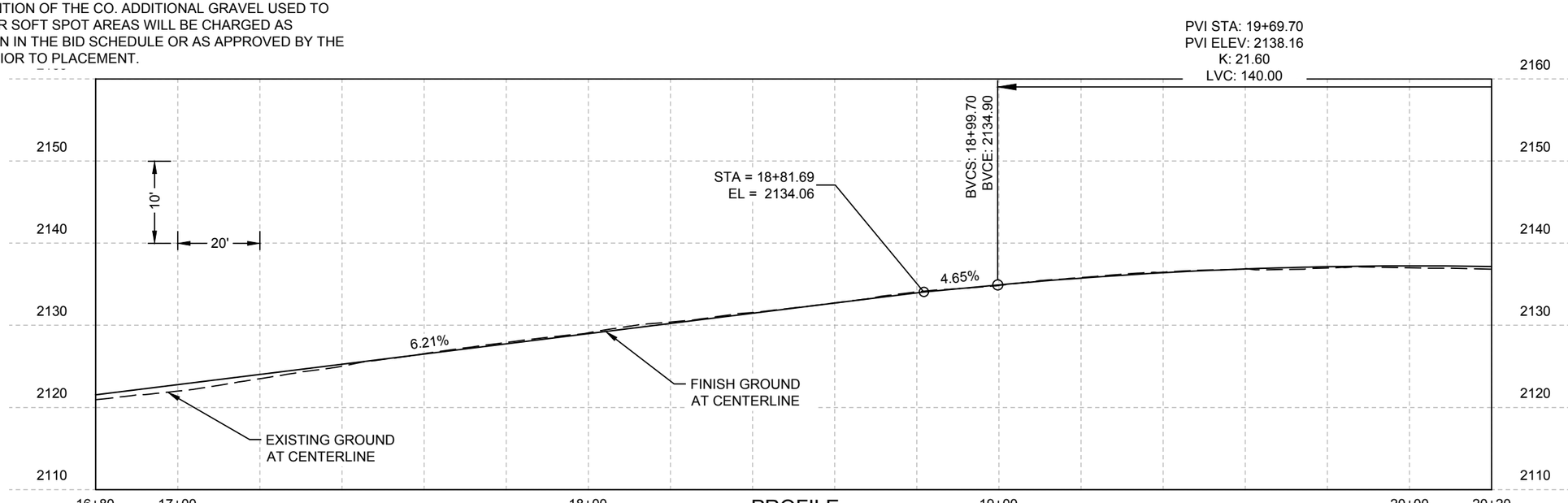

PROFILE

0 15 30
SCALE IN FEET
CONTOUR INTERVAL = 1'
(PLOT SIZE = 11" x 17")

United States Department of Agriculture
Forest Service

REGION #1
NORTHERN REGION

PROJECT NAME

SAM OWEN CAMPGROUND IMPROVEMENTS

IDAHO PANHANDLE NATIONAL FORESTS

SANDPOINT RANGER DISTRICT

DRAWING TITLE

ROADWAY PLAN & PROFILE - SCENTED LEAF LOOP

DATE
APRIL 2026

ARCHIVE NO.

DESIGNER
D. LEBSOCK

DRAWN
D. LEBSOCK

CHECKED
P. DRUYVESTEIN

PROJECT NO.
7431

DWG SHEET NO.
29

SHEET 29 OF 72

4/21/26 14:48 DANIEL.LEBSOCK C:\DJA-PWWORK\DJA-PROD\DMS29121\7431 - ROADWAY PLAN AND PROFILE.DWG;

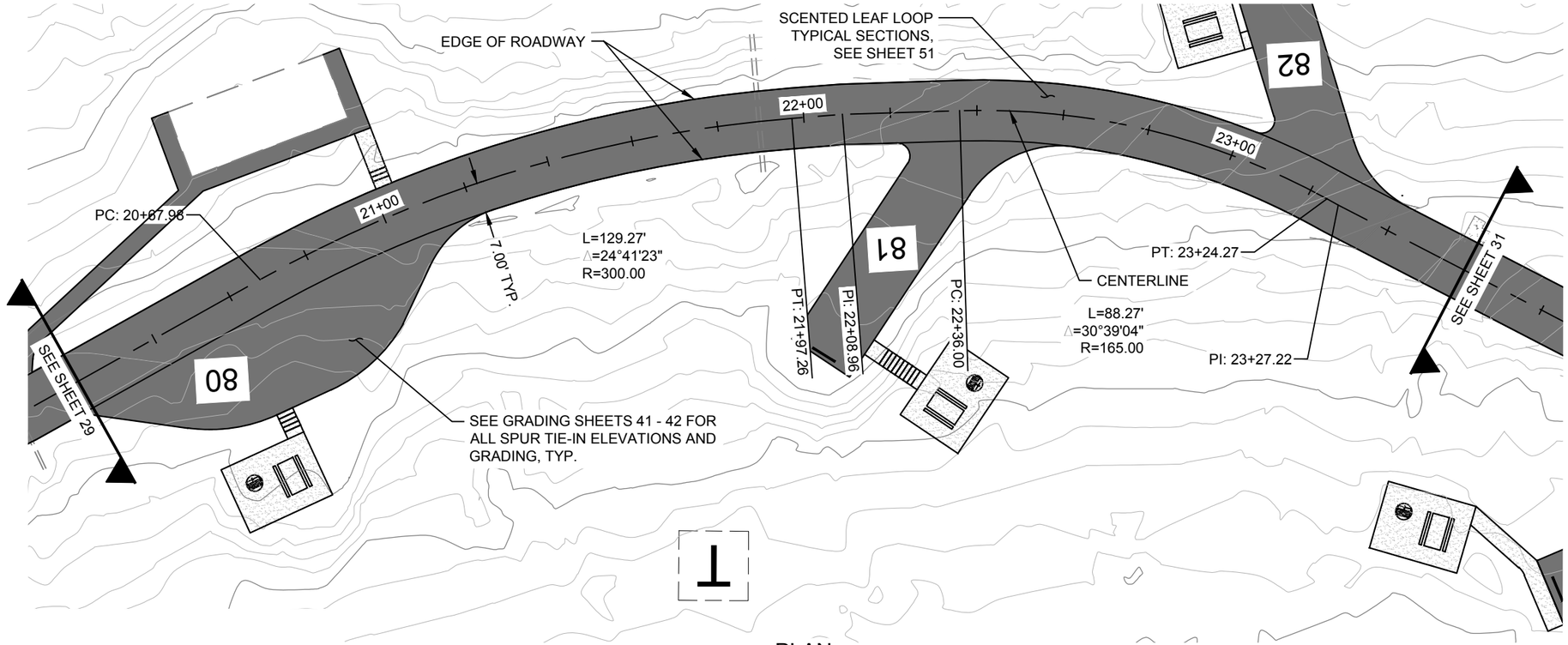

PLAN

NOTES:

1. ANY SOFT SPOTS ENCOUNTERED DURING CONSTRUCTION ARE TO BE BROUGHT TO THE ATTENTION OF THE CO. ADDITIONAL GRAVEL USED TO REPAIR SOFT SPOT AREAS WILL BE CHARGED AS SHOWN IN THE BID SCHEDULE OR AS APPROVED BY THE CO PRIOR TO PLACEMENT.

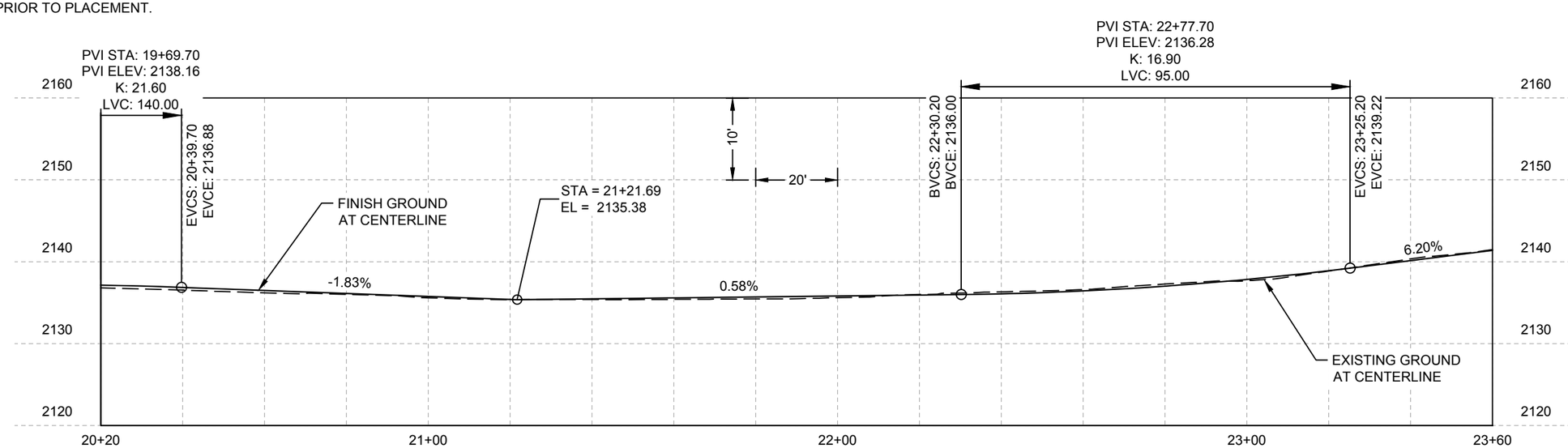

PROFILE

SCALE IN FEET
CONTOUR INTERVAL = 1'
(PLOT SIZE = 11" x 17")

United States Department of Agriculture
Forest Service

REGION #1
NORTHERN REGION

PROJECT NAME

SAM OWEN CAMPGROUND IMPROVEMENTS

IDAHO PANHANDLE NATIONAL FORESTS

SANDPOINT RANGER DISTRICT

DRAWING TITLE

ROADWAY PLAN & PROFILE - SCENTED LEAF LOOP

DATE
APRIL 2026

ARCHIVE NO.

DESIGNER
D. LEBSOCK

DRAWN
D. LEBSOCK

CHECKED
P. DRUYVESTEIN

PROJECT NO.
7431

DWG SHEET NO.
30

SHEET 30 OF 72

4/21/26 14:48 DANIEL.LEBSOCK C:\DJA-PWWORK\DJA-PROD\DMS29121\7431 - ROADWAY PLAN AND PROFILE.DWG;

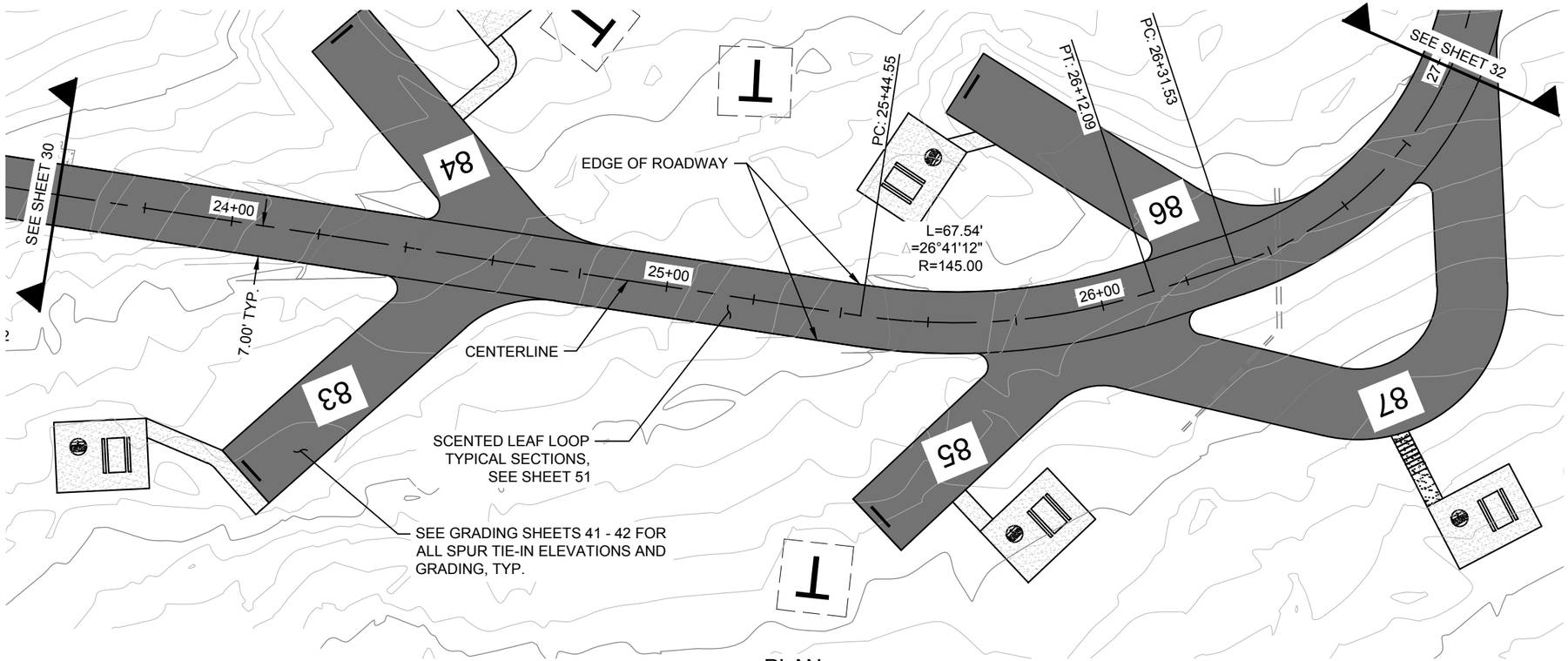

PLAN

NOTES:

1. ANY SOFT SPOTS ENCOUNTERED DURING CONSTRUCTION ARE TO BE BROUGHT TO THE ATTENTION OF THE CO. ADDITIONAL GRAVEL USED TO REPAIR SOFT SPOT AREAS WILL BE CHARGED AS SHOWN IN THE BID SCHEDULE OR AS APPROVED BY THE CO PRIOR TO PLACEMENT.

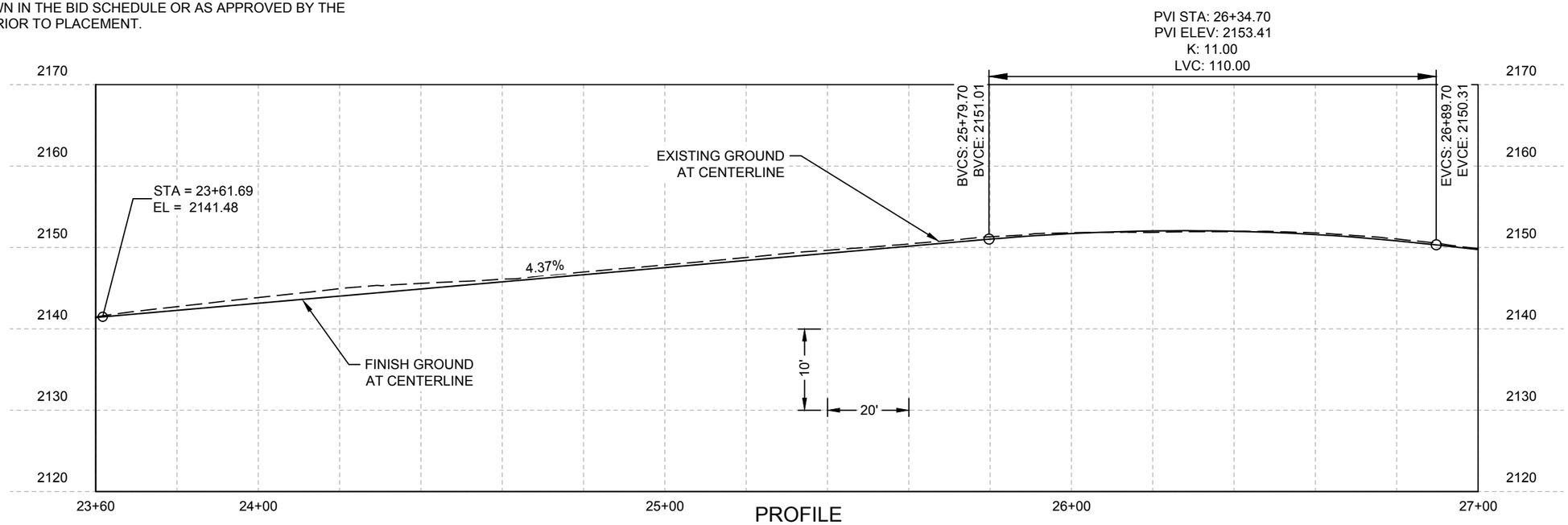

PROFILE

SCALE IN FEET
CONTOUR INTERVAL = 1'
(PLOT SIZE = 11" x 17")

United States Department of Agriculture
Forest Service

REGION #1
NORTHERN REGION

PROJECT NAME

SAM OWEN CAMPGROUND IMPROVEMENTS

IDAHO PANHANDLE NATIONAL FORESTS

SANDPOINT RANGER DISTRICT

DRAWING TITLE

ROADWAY PLAN & PROFILE - SCENTED LEAF LOOP

DATE
APRIL 2026

ARCHIVE NO.

DESIGNER
D. LEBSOCK

DRAWN
D. LEBSOCK

CHECKED
P. DRUYVESTEIN

PROJECT NO.
7431

DWG SHEET NO.
31

SHEET 31 OF 72

4/21/26 14:48 DANIEL.LEBSOCK C:\DJA-PWWORK\DJA-PROD\DMS29121\7431 - ROADWAY PLAN AND PROFILE.DWG;

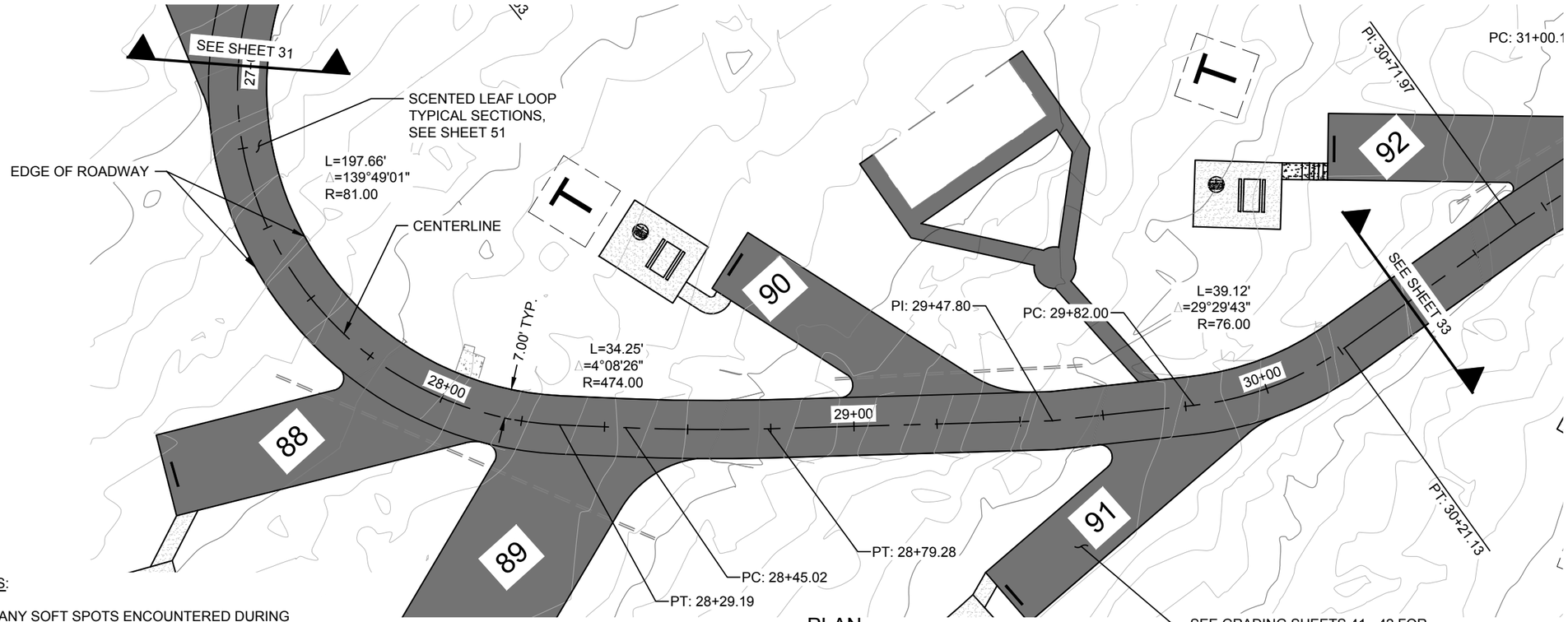

PLAN

NOTES:

1. ANY SOFT SPOTS ENCOUNTERED DURING CONSTRUCTION ARE TO BE BROUGHT TO THE ATTENTION OF THE CO. ADDITIONAL GRAVEL USED TO REPAIR SOFT SPOT AREAS WILL BE CHARGED AS SHOWN IN THE BID SCHEDULE OR AS APPROVED BY THE CO PRIOR TO PLACEMENT.

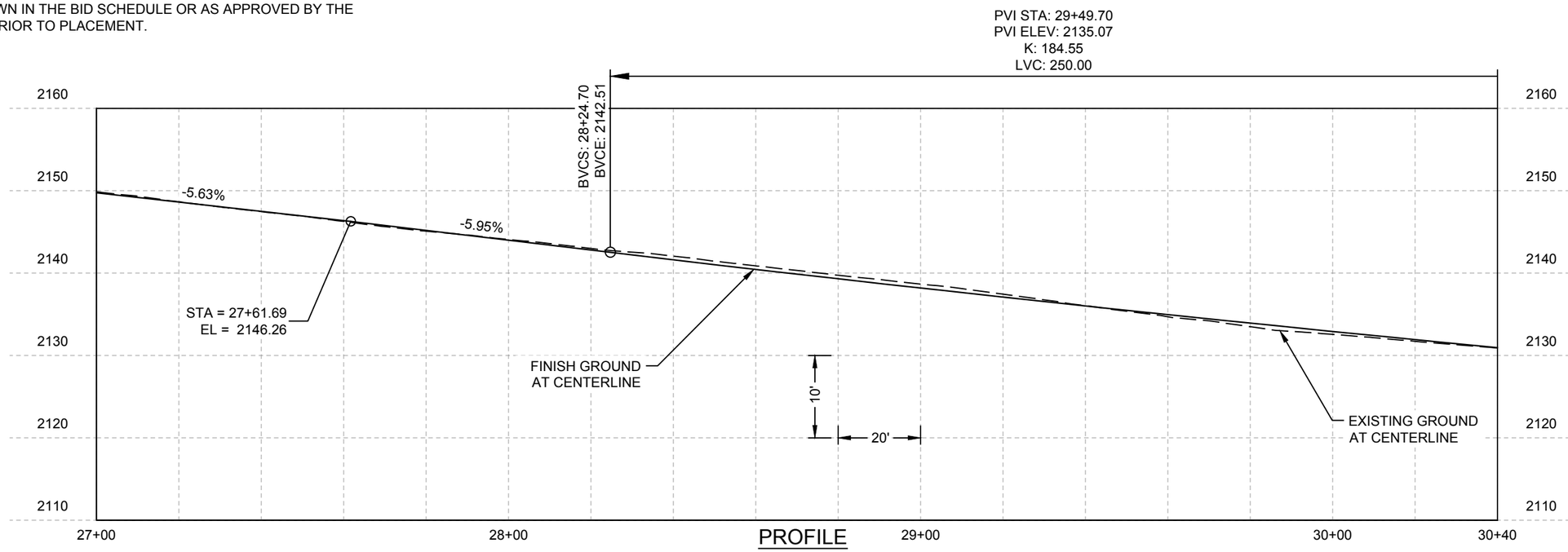

PROFILE

SCALE IN FEET
CONTOUR INTERVAL = 1'
(PLOT SIZE = 11" x 17")

United States Department of Agriculture
Forest Service

REGION #1
NORTHERN REGION

PROJECT NAME

SAM OWEN CAMPGROUND IMPROVEMENTS

IDAHO PANHANDLE NATIONAL FORESTS

SANDPOINT RANGER DISTRICT

DRAWING TITLE

ROADWAY PLAN & PROFILE - SCENTED LEAF LOOP

DATE
APRIL 2026

ARCHIVE NO.

DESIGNER
D. LEBSOCK

DRAWN
D. LEBSOCK

CHECKED
P. DRUYVESTEIN

PROJECT NO.
7431

DWG SHEET NO.
32

SHEET 32 OF 72

4/21/26 14:48 DANIEL.LEBSOCK C:\DJA-PWWORK\DJA-PROD\DMS29121\7431 - ROADWAY PLAN AND PROFILE.DWG;

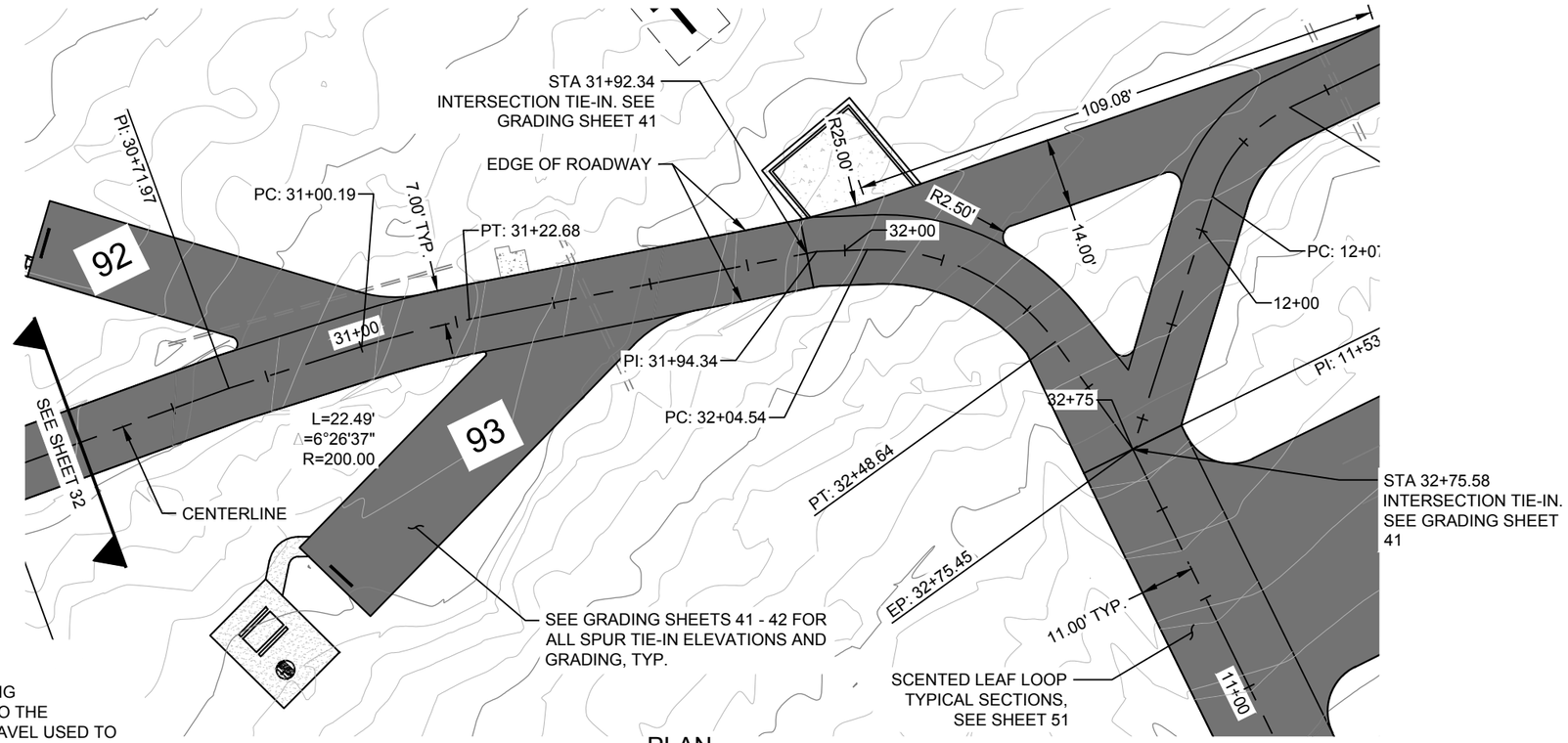

PLAN

NOTES:

1. ANY SOFT SPOTS ENCOUNTERED DURING CONSTRUCTION ARE TO BE BROUGHT TO THE ATTENTION OF THE CO. ADDITIONAL GRAVEL USED TO REPAIR SOFT SPOT AREAS WILL BE CHARGED AS SHOWN IN THE BID SCHEDULE OR AS APPROVED BY THE CO PRIOR TO PLACEMENT.

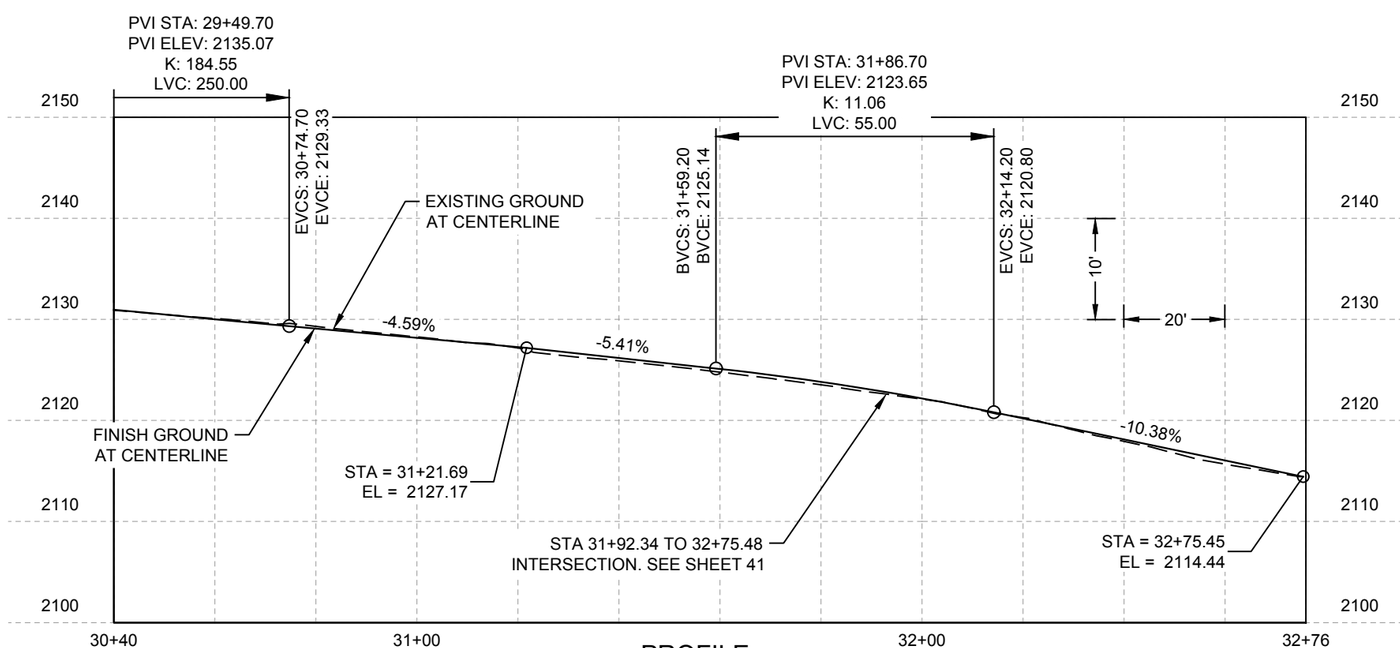

PROFILE

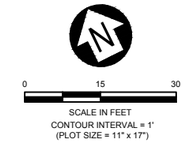

United States Department of Agriculture
Forest Service

REGION #1
NORTHERN REGION

PROJECT NAME

SAM OWEN CAMPGROUND IMPROVEMENTS

IDAHO PANHANDLE NATIONAL FORESTS

SANDPOINT RANGER DISTRICT

DRAWING TITLE

ROADWAY PLAN & PROFILE - SCENTED LEAF LOOP

DATE
APRIL 2026

ARCHIVE NO.

DESIGNER
D. LEBSOCK

DRAWN
D. LEBSOCK

CHECKED
P. DRUYVESTEIN

PROJECT NO.
7431

DWG SHEET NO.
33

SHEET 33 OF 72

4/21/26 14:48 DANIEL.LEBSOCK C:\DJA-PWWORK\DJA-PROD\DMS29121\7431 - ROADWAY PLAN AND PROFILE.DWG;

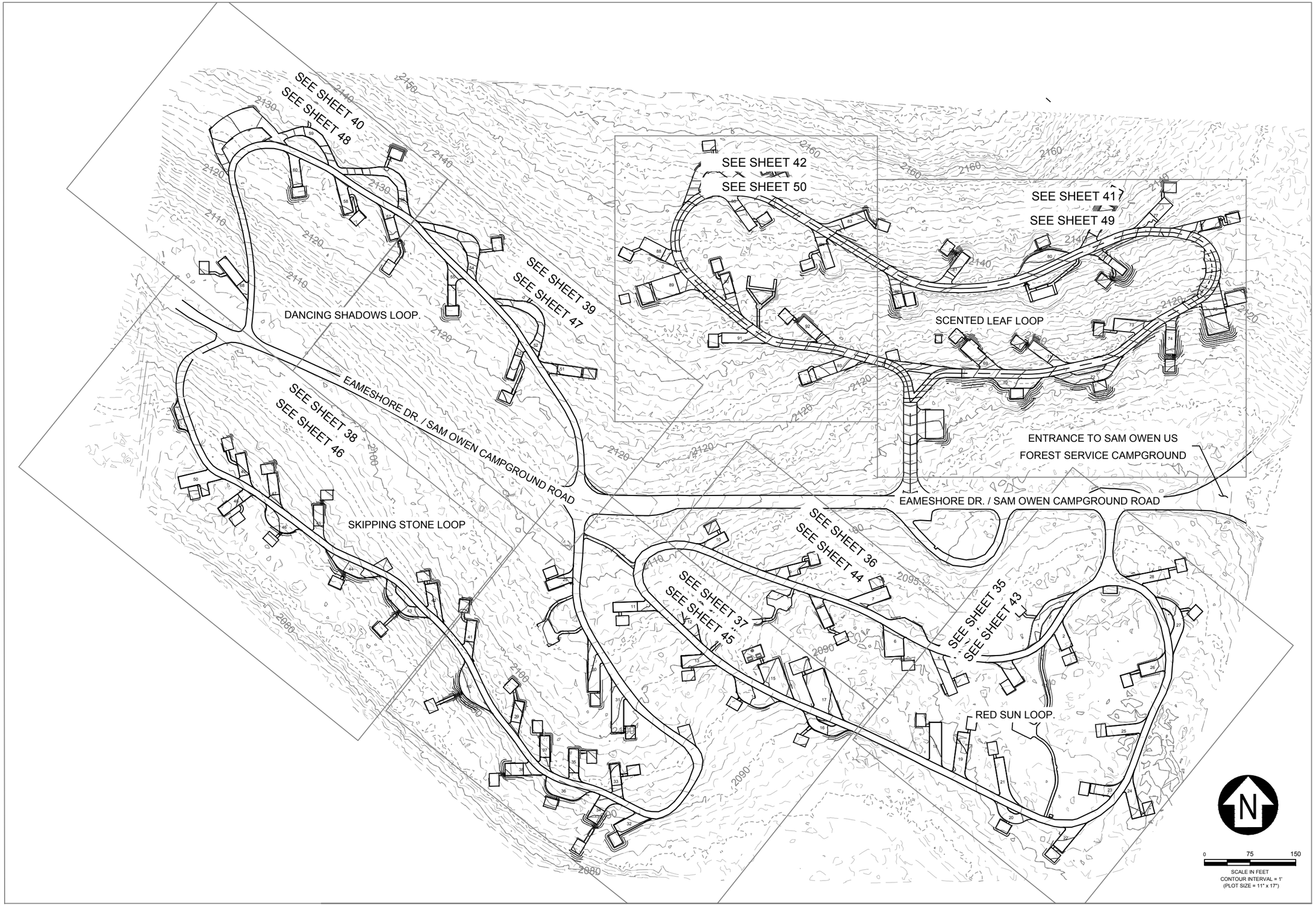

United States Department of Agriculture
Forest Service

REGION 1
NORTHERN REGION

PROJECT NAME

SAM OWEN CAMPGROUND IMPROVEMENTS

IDAHO PANHANDLE NATIONAL FORESTS

SANDPOINT RANGER DISTRICT

DRAWING TITLE

GRADING PLAN - KEY MAP

DATE APRIL 2026	
ARCHIVE NO.	
DESIGNER D. LEBSOCK	DWG SHEET NO. 34
DRAWN D. LEBSOCK	
CHECKED P. DRUYVESTEIN	SHEET 34 OF 72
PROJECT NO. 7431	

4/20/26 09:44 DANIELL.LEBSOCK C:\DJA-PW\WORK\DJA-PROD\DMS29121\7431 - GRADING.DWG:

GENERAL NOTES

1. CAMP LIVING AREAS AND CONNECTING PATHS ARE TO BE CONSTRUCTED IN ACCORDANCE WITH DETAIL 2, SHEET 53 AND DETAIL 5, SHEET 54, RESPECTIVELY.
2. MAXIMUM CUT SLOPE IS 2H : 1V UNLESS OTHERWISE NOTED.
3. MAXIMUM FILL SLOPE IS 3H : 1V UNLESS OTHERWISE NOTED.

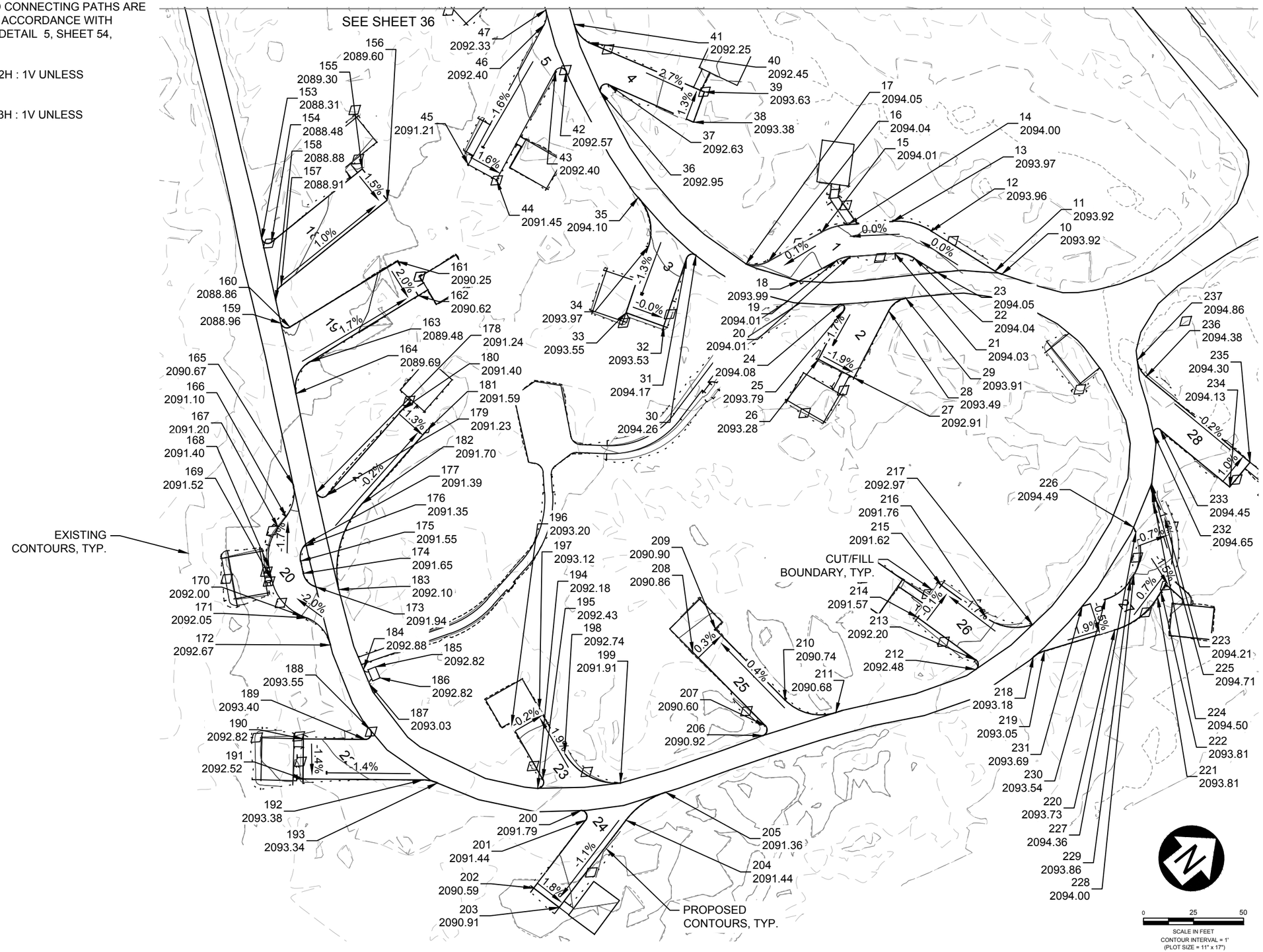

USDA FOREST SERVICE

United States Department of Agriculture
Forest Service

REGION 1
NORTHERN REGION

PROJECT NAME

SAM OWEN CAMPGROUND IMPROVEMENTS

IDAHO PANHANDLE NATIONAL FORESTS

SANDPOINT RANGER DISTRICT

DRAWING TITLE

ROADWAY GRADING PLAN - RED SUN LOOP N.

DATE
APRIL 2026

ARCHIVE NO.

DESIGNER	DWG SHEET NO.
D. LEBSOCK	35
DRAWN: D. LEBSOCK	
CHECKED: P. DRUYVESTEIN	SHEET 35 OF 72
PROJECT NO. 7431	

4/20/26 09:44 DANIEL.LEBSOCK C:\DJA-PW\WORK\DJA-PROD\DMS29121\7431 - GRADING.DWG;

GENERAL NOTES

1. CAMP LIVING AREAS AND CONNECTING PATHS ARE TO BE CONSTRUCTED IN ACCORDANCE WITH DETAIL 2, SHEET 53 AND DETAIL 5, SHEET 54, RESPECTIVELY.

2. MAXIMUM CUT SLOPE IS 2H : 1V UNLESS OTHERWISE NOTED.

3. MAXIMUM FILL SLOPE IS 3H : 1V UNLESS OTHERWISE NOTED.

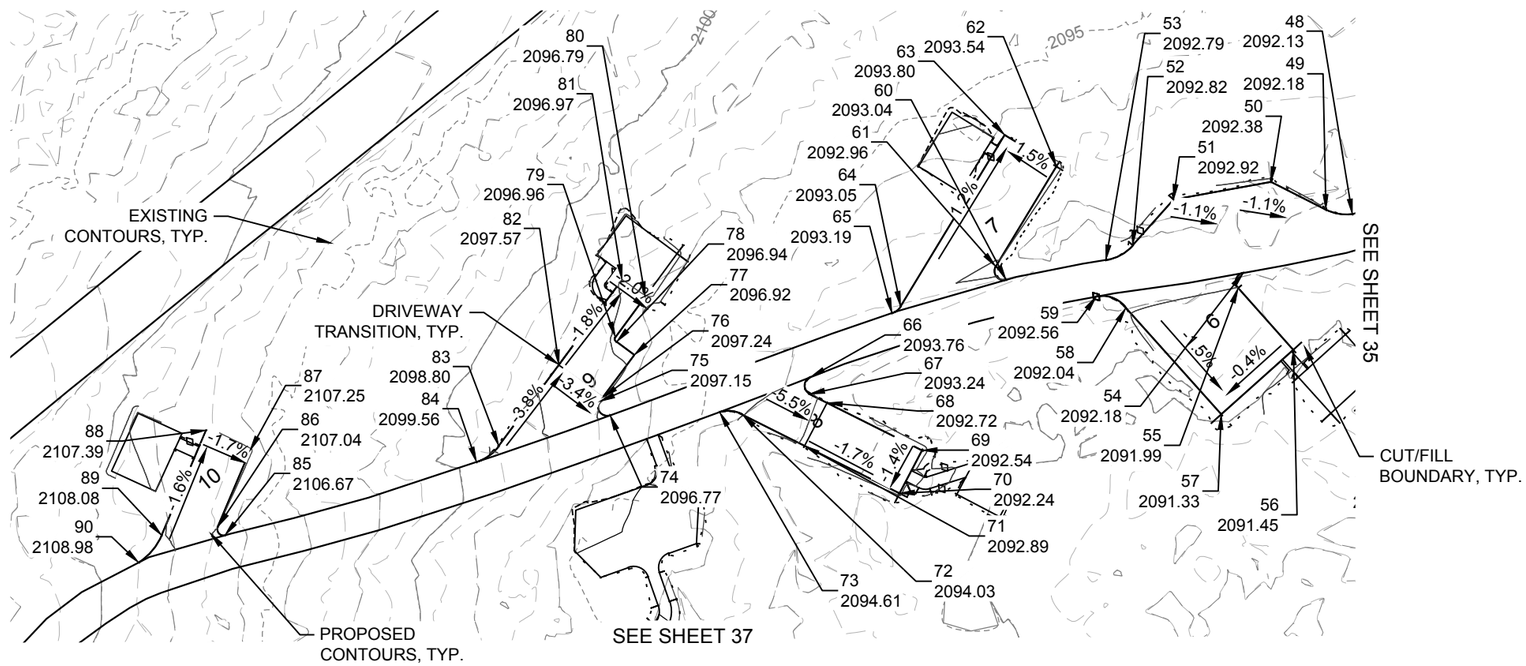

United States Department of Agriculture
Forest Service

REGION 1
NORTHERN REGION

PROJECT NAME

SAM OWEN CAMPGROUND IMPROVEMENTS

IDAHO PANHANDLE NATIONAL FORESTS

SANDPOINT RANGER DISTRICT

DRAWING TITLE

ROADWAY GRADING PLAN - RED SUN LOOP

DATE
APRIL 2026

ARCHIVE NO.

DESIGNER
D. LEBSOCK

DRAWN
D. LEBSOCK

CHECKED
P. DRUYVESTEIN

PROJECT NO.
7431

DWG SHEET NO.
36

SHEET 36 OF 72

4/20/26 09:44 DANIEL.LEBSOCK C:\DJA-PWWORK\DJA-PROD\DMS29121\7431 - GRADING.DWG;

GENERAL NOTES

1. CAMP LIVING AREAS AND CONNECTING PATHS ARE TO BE CONSTRUCTED IN ACCORDANCE WITH DETAIL 2, SHEET 53 AND DETAIL 5, SHEET 54, RESPECTIVELY.
2. MAXIMUM CUT SLOPE IS 2H : 1V UNLESS OTHERWISE NOTED.
3. MAXIMUM FILL SLOPE IS 3H : 1V UNLESS OTHERWISE NOTED.

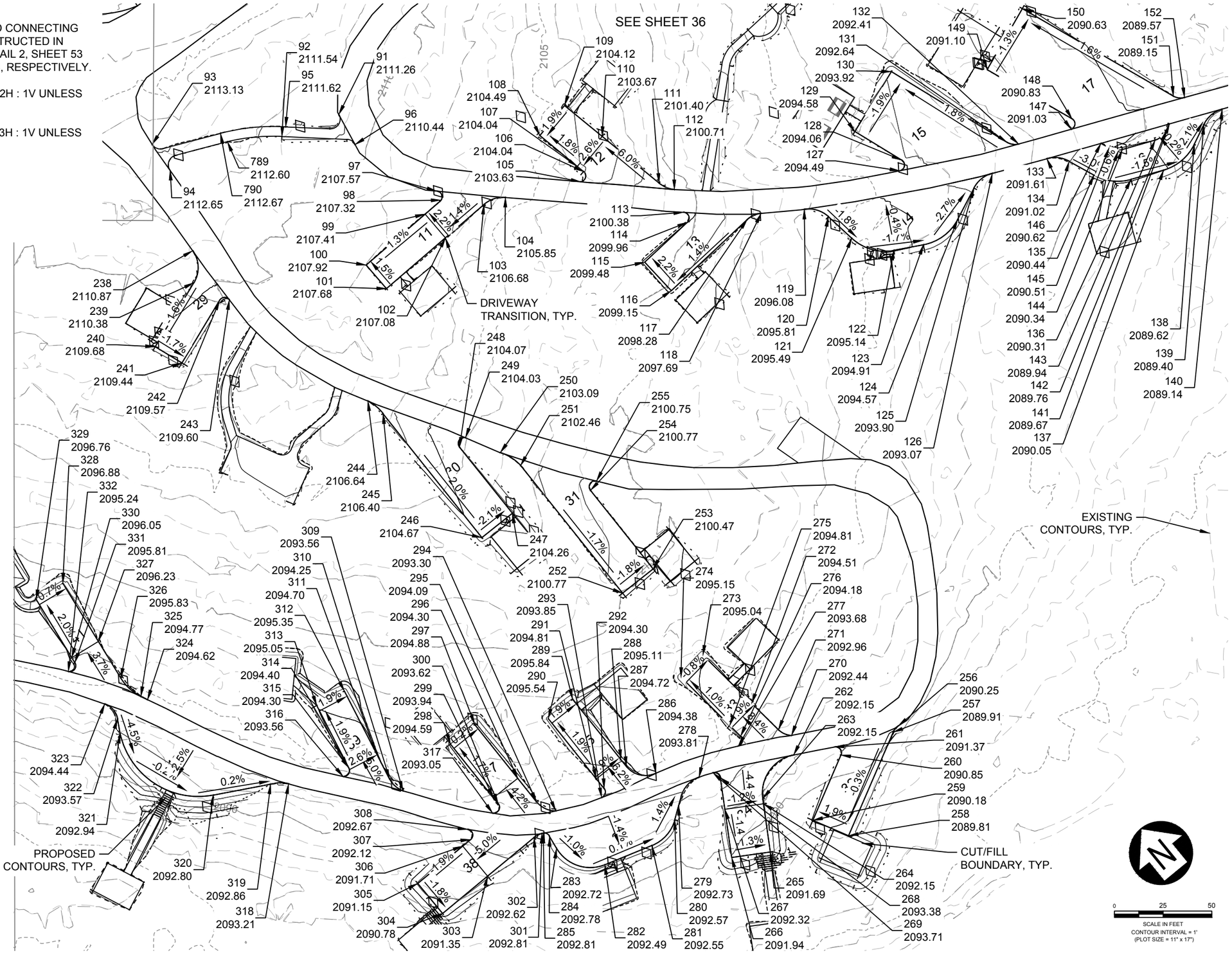

USDA FOREST SERVICE

United States Department of Agriculture
Forest Service

REGION 1
NORTHERN REGION

PROJECT NAME

SAM OWEN CAMPGROUND IMPROVEMENTS

IDAHO PANHANDLE NATIONAL FORESTS

SANDPOINT RANGER DISTRICT

DRAWING TITLE

ROADWAY GRADING PLAN - RED SUN LOOP W. & SKIPPING STONE LOOP E.

DATE APRIL 2026	
ARCHIVE NO.	
DESIGNER D. LEBSOCK	DWG SHEET NO. 37
DRAWN D. LEBSOCK	
CHECKED P. DRUYVESTEIN	SHEET 37 OF 72
PROJECT NO. 7431	

4/20/26 09:44 DANIEL.LEBSOCK C:\DJA-PWWORK\DJA-PRODIDMS29121\7431 - GRADING.DWG;

GENERAL NOTES

1. CAMP LIVING AREAS AND CONNECTING PATHS ARE TO BE CONSTRUCTED IN ACCORDANCE WITH DETAIL 2, SHEET 53 AND DETAIL 5, SHEET 54, RESPECTIVELY.
2. MAXIMUM CUT SLOPE IS 2H : 1V UNLESS OTHERWISE NOTED.
3. MAXIMUM FILL SLOPE IS 3H : 1V UNLESS OTHERWISE NOTED.

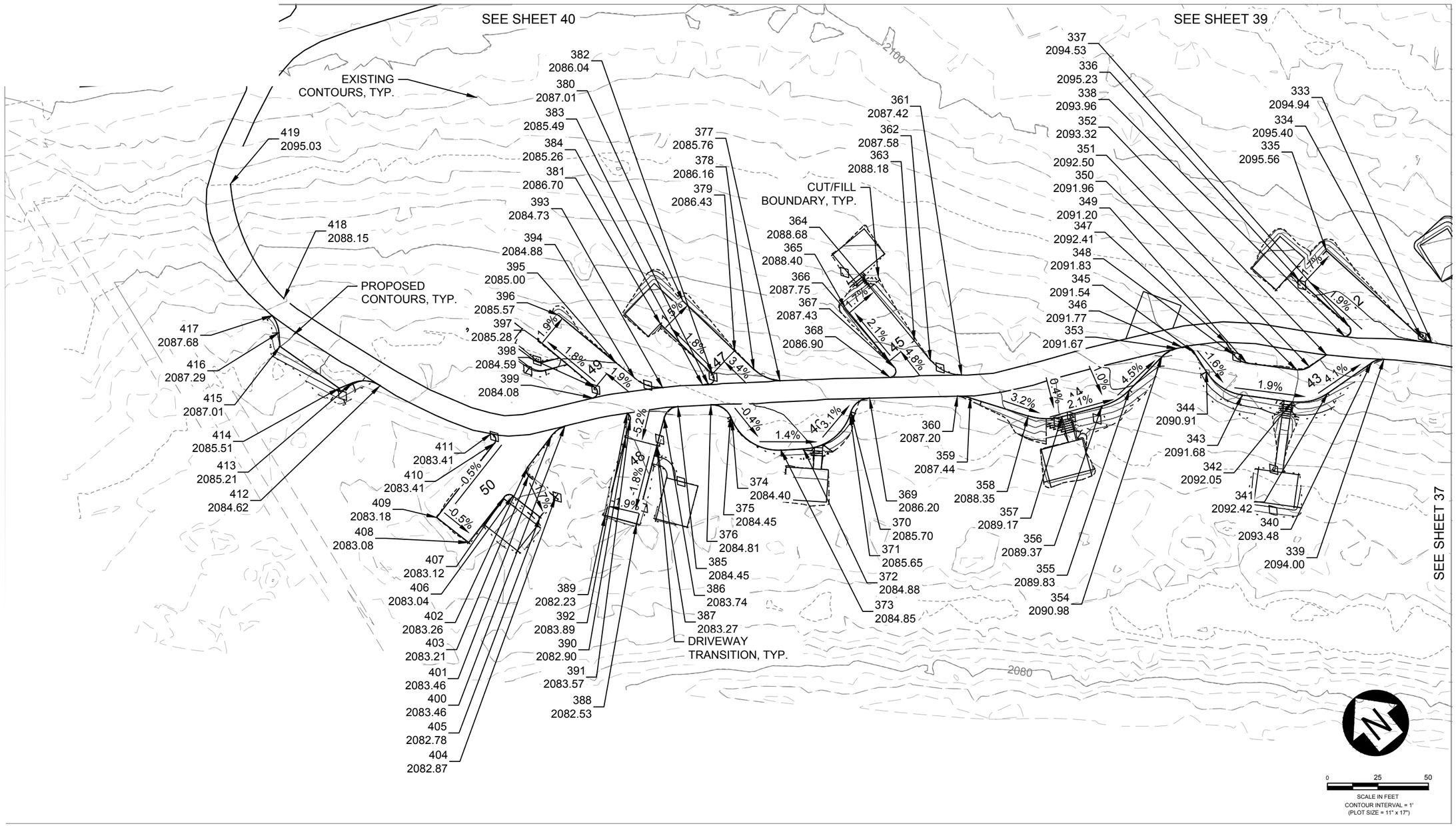

United States Department of Agriculture
Forest Service

REGION 1
NORTHERN REGION

PROJECT NAME

SAM OWEN CAMPGROUND IMPROVEMENTS

IDAHO PANHANDLE NATIONAL FORESTS

SANDPOINT RANGER DISTRICT

DRAWING TITLE

ROADWAY GRADING PLAN - SKIPPING STONE LOOP E.

DATE
APRIL 2026

ARCHIVE NO.

DESIGNER
D. LEBSOCK

DRAWN
D. LEBSOCK

CHECKED
P. DRUYVESTEIN

PROJECT NO.
7431

DWG SHEET NO.
38

SHEET 38 OF 72

4/20/26 09:44 DANIEL.LEBSOCK C:\DJA-PWWORK\DJA-PROD\DMS29121\7431 - GRADING.DWG:

GENERAL NOTES

1. CAMP LIVING AREAS AND CONNECTING PATHS ARE TO BE CONSTRUCTED IN ACCORDANCE WITH DETAIL 2, SHEET 53 AND DETAIL 5, SHEET 54, RESPECTIVELY.

2. MAXIMUM CUT SLOPE IS 2H : 1V UNLESS OTHERWISE NOTED.

3. MAXIMUM FILL SLOPE IS 3H : 1V UNLESS OTHERWISE NOTED.

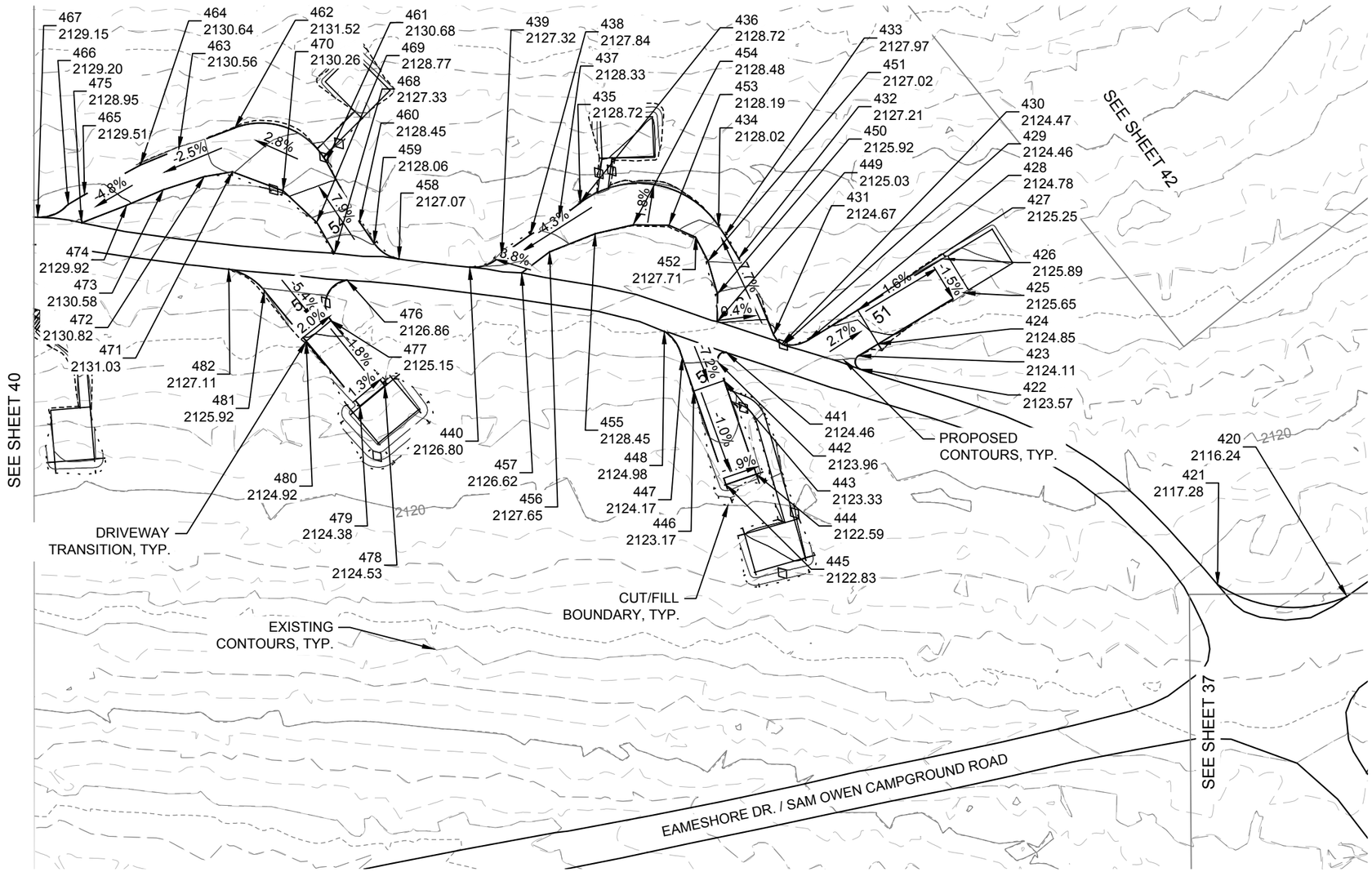

0 25 50
SCALE IN FEET
CONTOUR INTERVAL = 1'
(PLOT SIZE = 11" x 17")

United States Department of Agriculture
Forest Service

REGION 1
NORTHERN REGION

PROJECT NAME

SAM OWEN CAMPGROUND IMPROVEMENTS

IDAHO PANHANDLE NATIONAL FORESTS

SANDPOINT RANGER DISTRICT

DRAWING TITLE

ROADWAY GRADING PLAN - DANCING SHADOWS LOOP E.

DATE APRIL 2026	
ARCHIVE NO.	
DESIGNER D. LEBSOCK	DWG SHEET NO. 39
DRAWN D. LEBSOCK	
CHECKED P. DRUYVESTEIN	SHEET 39 OF 72
PROJECT NO. 7431	

4/20/26 09:44 DANIEL.LEBSOCK C:\DJA-PWWORK\DJA-PROD\DMS29121\7431 - GRADING.DWG;

GENERAL NOTES

1. CAMP LIVING AREAS AND CONNECTING PATHS ARE TO BE CONSTRUCTED IN ACCORDANCE WITH DETAIL 2, SHEET 53 AND DETAIL 5, SHEET 54, RESPECTIVELY.
2. MAXIMUM CUT SLOPE IS 2H : 1V UNLESS OTHERWISE NOTED.
3. MAXIMUM FILL SLOPE IS 3H : 1V UNLESS OTHERWISE NOTED.

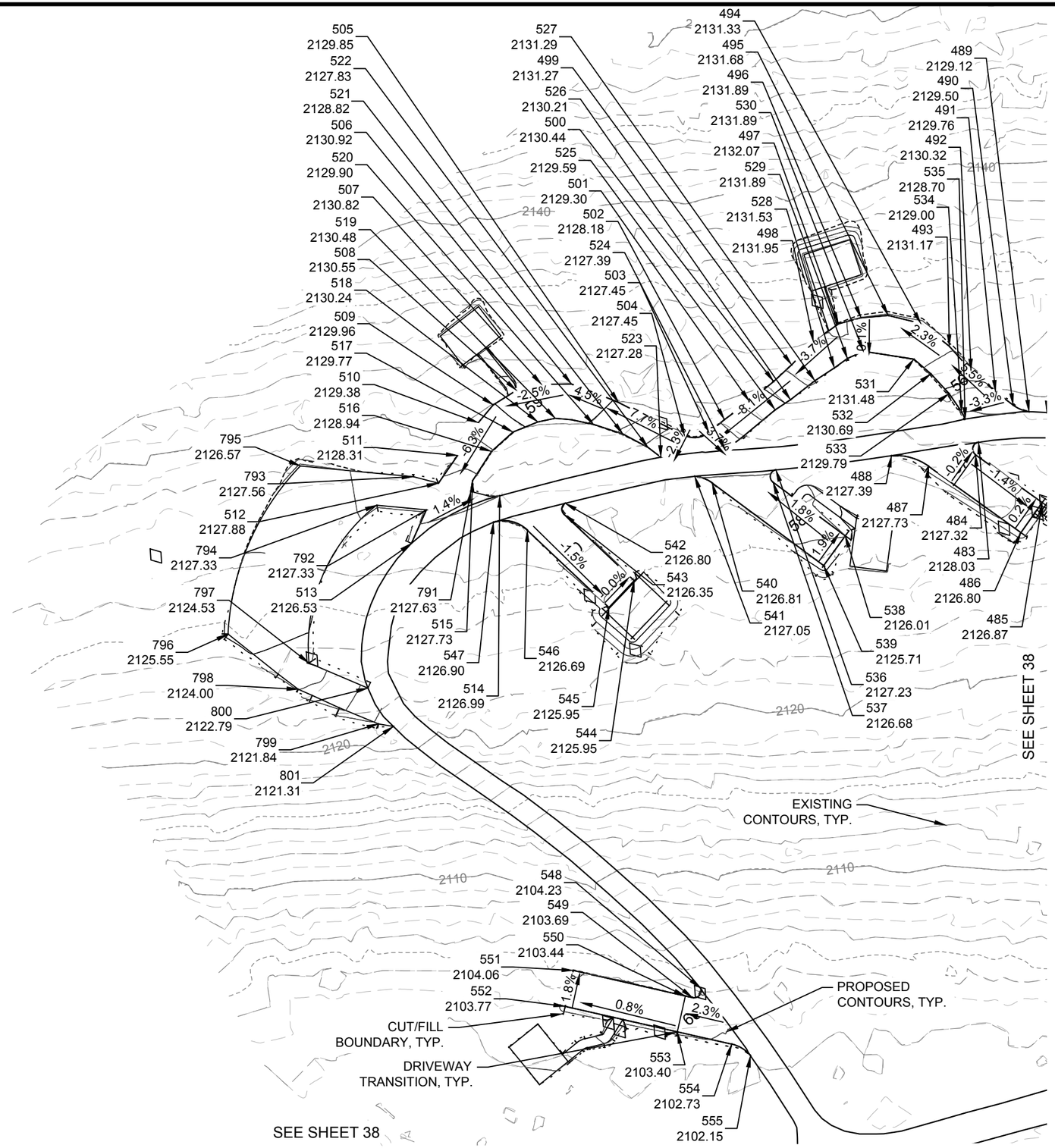

0 25 50
SCALE IN FEET
CONTOUR INTERVAL = 1'
(PLOT SIZE = 11" x 17")

USDA FOREST SERVICE
United States Department of Agriculture
Forest Service

REGION 1
NORTHERN REGION

PROJECT NAME

SAM OWEN CAMPGROUND IMPROVEMENTS

IDAHO PANHANDLE NATIONAL FORESTS

SANDPOINT RANGER DISTRICT

DRAWING TITLE

ROADWAY GRADING PLAN - DANCING SHADOWS LOOP W.

DATE
APRIL 2026

ARCHIVE NO.

DESIGNER
D. LEBSOCK

DRAWN
D. LEBSOCK

CHECKED
P. DRUYVESTEIN

PROJECT NO.
7431

DWG SHEET NO.
40

SHEET 40 OF 72

4/20/26 09:44 DANIEL.LEBSOCK C:\DJA-PWWORK\DJA-PROD\DMS29121\7431 - GRADING.DWG;

GENERAL NOTES

1. CAMP LIVING AREAS AND CONNECTING PATHS ARE TO BE CONSTRUCTED IN ACCORDANCE WITH DETAIL 2, SHEET 53 AND DETAIL 5, SHEET 54, RESPECTIVELY.
2. MAXIMUM CUT SLOPE IS 2H : 1V UNLESS OTHERWISE NOTED.
3. MAXIMUM FILL SLOPE IS 3H : 1V UNLESS OTHERWISE NOTED.

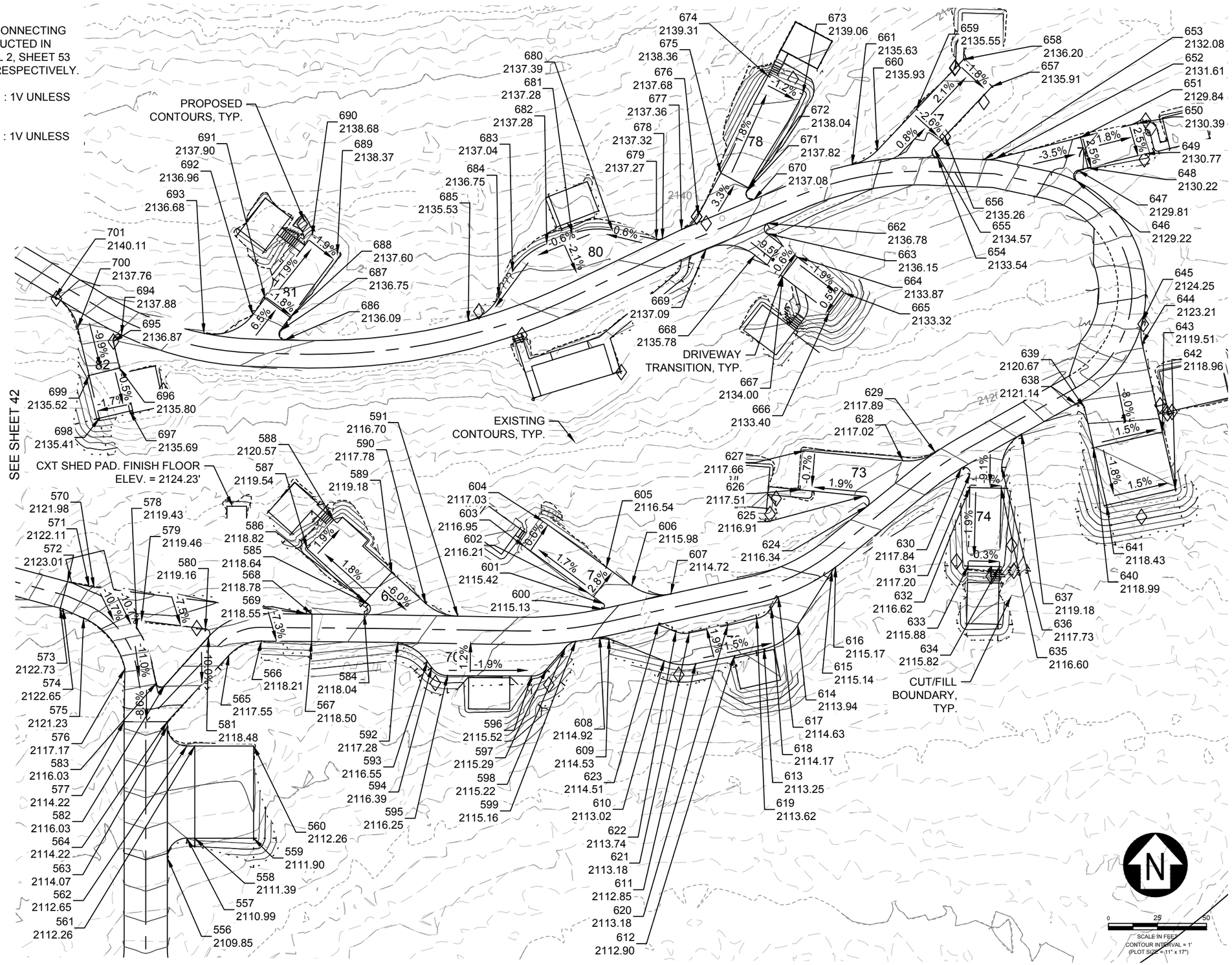

USDA FOREST SERVICE

United States Department of Agriculture
Forest Service

REGION 1
NORTHERN REGION

PROJECT NAME

SAM OWEN CAMPGROUND IMPROVEMENTS

IDAHO PANHANDLE NATIONAL FORESTS

SANDPOINT RANGER DISTRICT

DRAWING TITLE

ROADWAY GRADING PLAN - SCENTED LEAF LOOP E.

DATE APRIL 2026	
ARCHIVE NO.	
DESIGNER D. LEBSOCK	DWG SHEET NO. 41
DRAWN D. LEBSOCK	
CHECKED P. DRUYVESTEIN	SHEET 41 OF 72
PROJECT NO. 7431	

4/20/26 09:44 DANIEL LEBSOCK C:\DJA-PWWORK\DJA-PROD\DMS29121\7431 - GRADING.DWG;

GENERAL NOTES

1. CAMP LIVING AREAS AND CONNECTING PATHS ARE TO BE CONSTRUCTED IN ACCORDANCE WITH DETAIL 2, SHEET 53 AND DETAIL 5, SHEET 54, RESPECTIVELY.
2. MAXIMUM CUT SLOPE IS 2H : 1V UNLESS OTHERWISE NOTED.
3. MAXIMUM FILL SLOPE IS 3H : 1V UNLESS OTHERWISE NOTED.

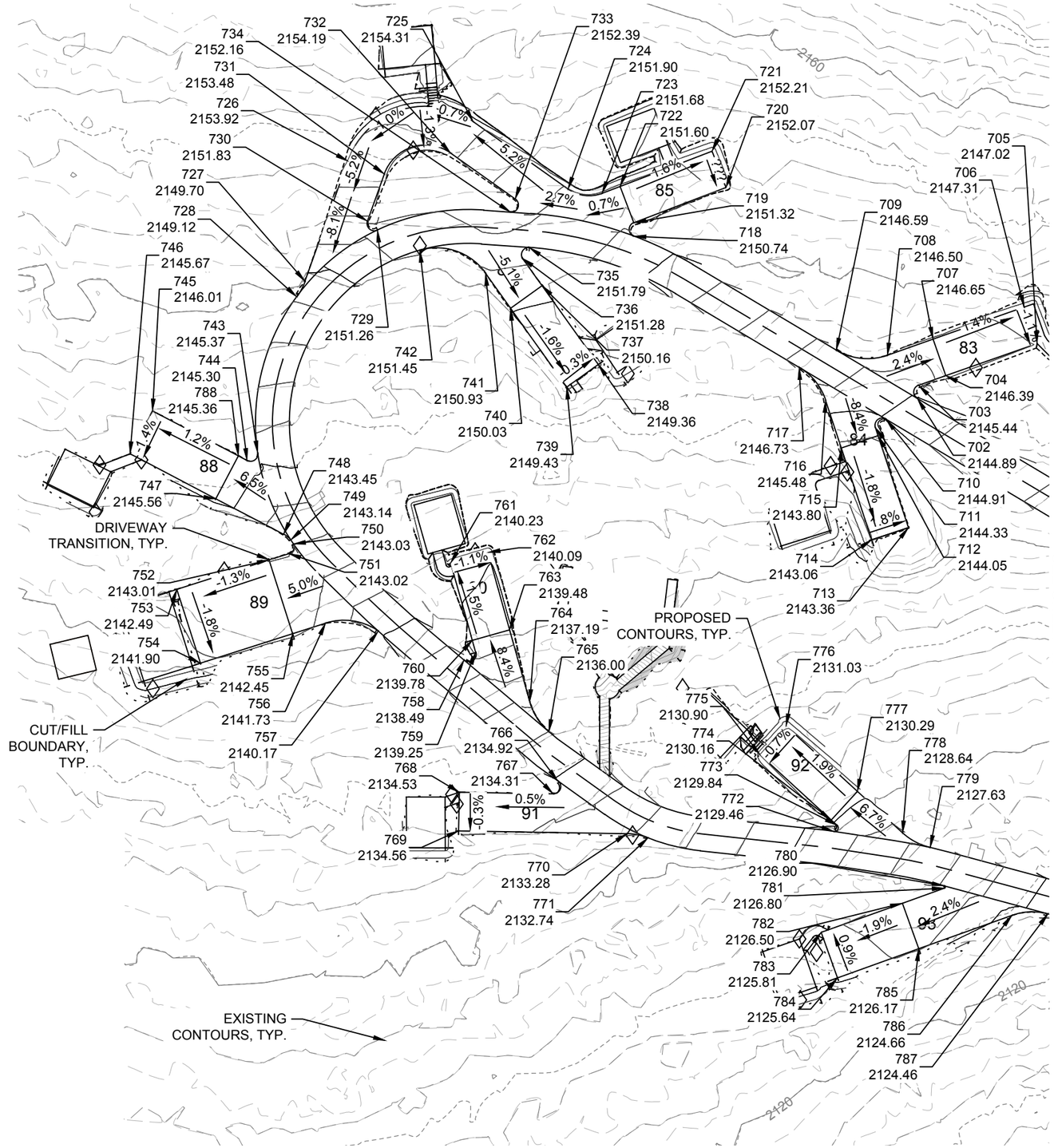

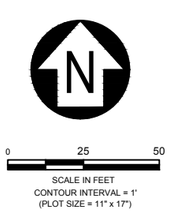

4/20/26 09:44 DANIEL.LEBSOCK C:\DJA-PWWORK\DJA-PRODIDMS29121\7431 - GRADING.DWG;

United States Department of Agriculture
Forest Service

REGION 1
NORTHERN REGION

PROJECT NAME

SAM OWEN CAMPGROUND IMPROVEMENTS

IDAHO PANHANDLE NATIONAL FORESTS

SANDPOINT RANGER DISTRICT

DRAWING TITLE

ROADWAY GRADING PLAN - SCENTED LEAF LOOP W.

DATE
APRIL 2026

ARCHIVE NO.

DESIGNER
D. LEBSOCK

DRAWN
D. LEBSOCK

CHECKED
P. DRUYVESTEIN

PROJECT NO.
7431

DWG SHEET NO.
42

SHEET 42 OF 72

GENERAL NOTES

1. CAMP LIVING AREAS AND CONNECTING PATHS ARE TO BE CONSTRUCTED IN ACCORDANCE WITH DETAIL 2, SHEET 53 AND DETAIL 5, SHEET 54, RESPECTIVELY.
2. SEE DETAIL 4, SHEET 55 FOR TIMBER CRIB STEP DETAIL.
3. MAXIMUM CUT SLOPE IS 2H : 1V UNLESS OTHERWISE NOTED.
4. MAXIMUM FILL SLOPE IS 3H : 1V UNLESS OTHERWISE NOTED.

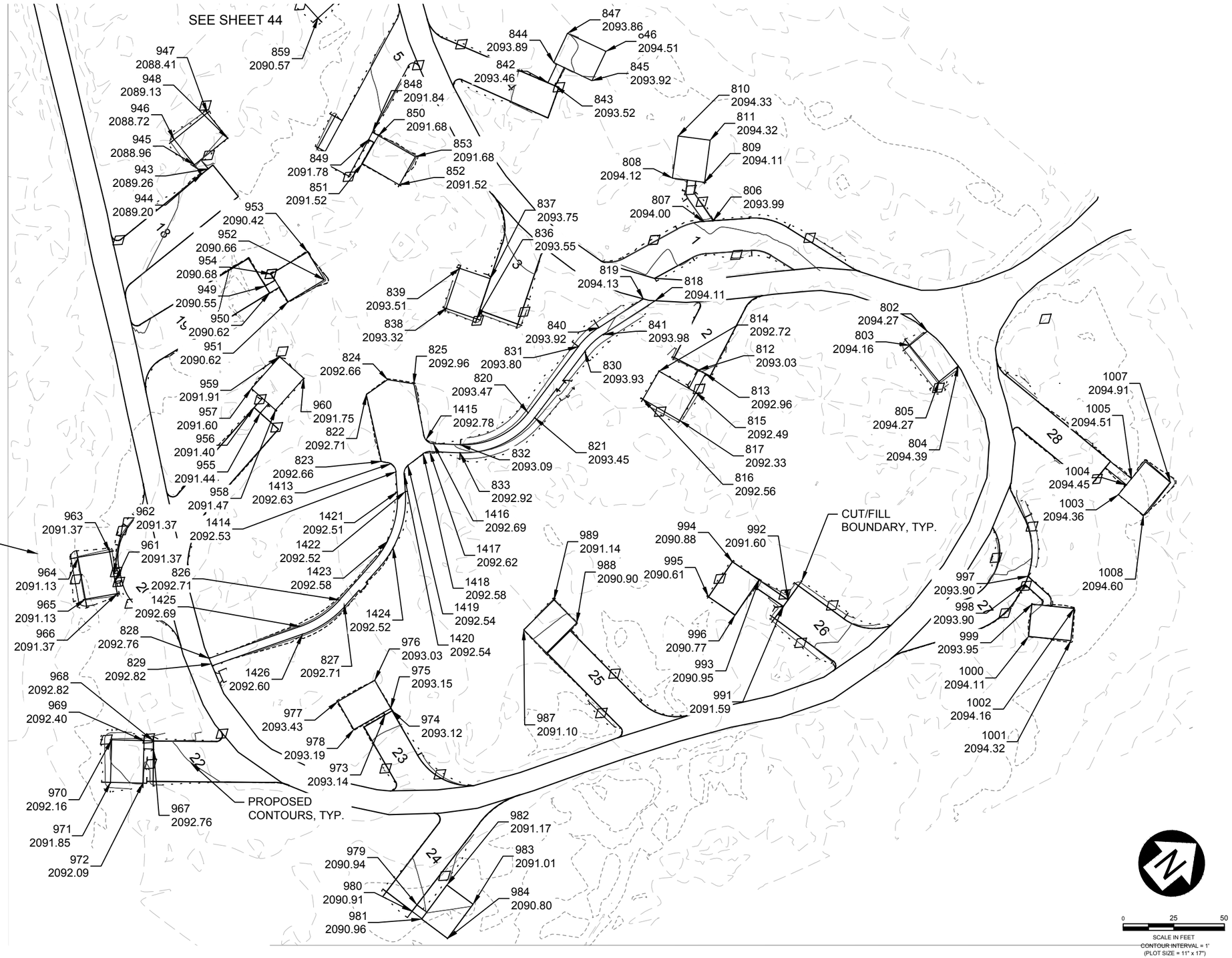

United States Department of Agriculture
Forest Service

REGION 1
NORTHERN REGION

PROJECT NAME

SAM OWEN CAMPGROUND IMPROVEMENTS

IDAHO PANHANDLE NATIONAL FORESTS

SANDPOINT RANGER DISTRICT

DRAWING TITLE

LIVING AREA AND TRAIL GRADING PLAN - RED SUN LOOP N.

DATE
APRIL 2026

ARCHIVE NO.

DESIGNER
D. LEBSOCK

DRAWN
D. LEBSOCK

CHECKED
P. DRUYVESTEIN

PROJECT NO.
7431

DWG SHEET NO.
43

SHEET 43 OF 72

4/20/26 09:49 DANIEL.LEBSOCK C:\DJA-PWWORK\DJA-PROD\DMS29121\7431 - GRADING LA & TRAILS.DWG;

GENERAL NOTES

1. CAMP LIVING AREAS AND CONNECTING PATHS ARE TO BE CONSTRUCTED IN ACCORDANCE WITH DETAIL 2, SHEET 53 AND DETAIL 5, SHEET 54, RESPECTIVELY.

2. SEE DETAIL 4, SHEET 55 FOR TIMBER CRIB STEP DETAIL.

3. MAXIMUM CUT SLOPE IS 2H : 1V UNLESS OTHERWISE NOTED.

4. MAXIMUM FILL SLOPE IS 3H : 1V UNLESS OTHERWISE NOTED.

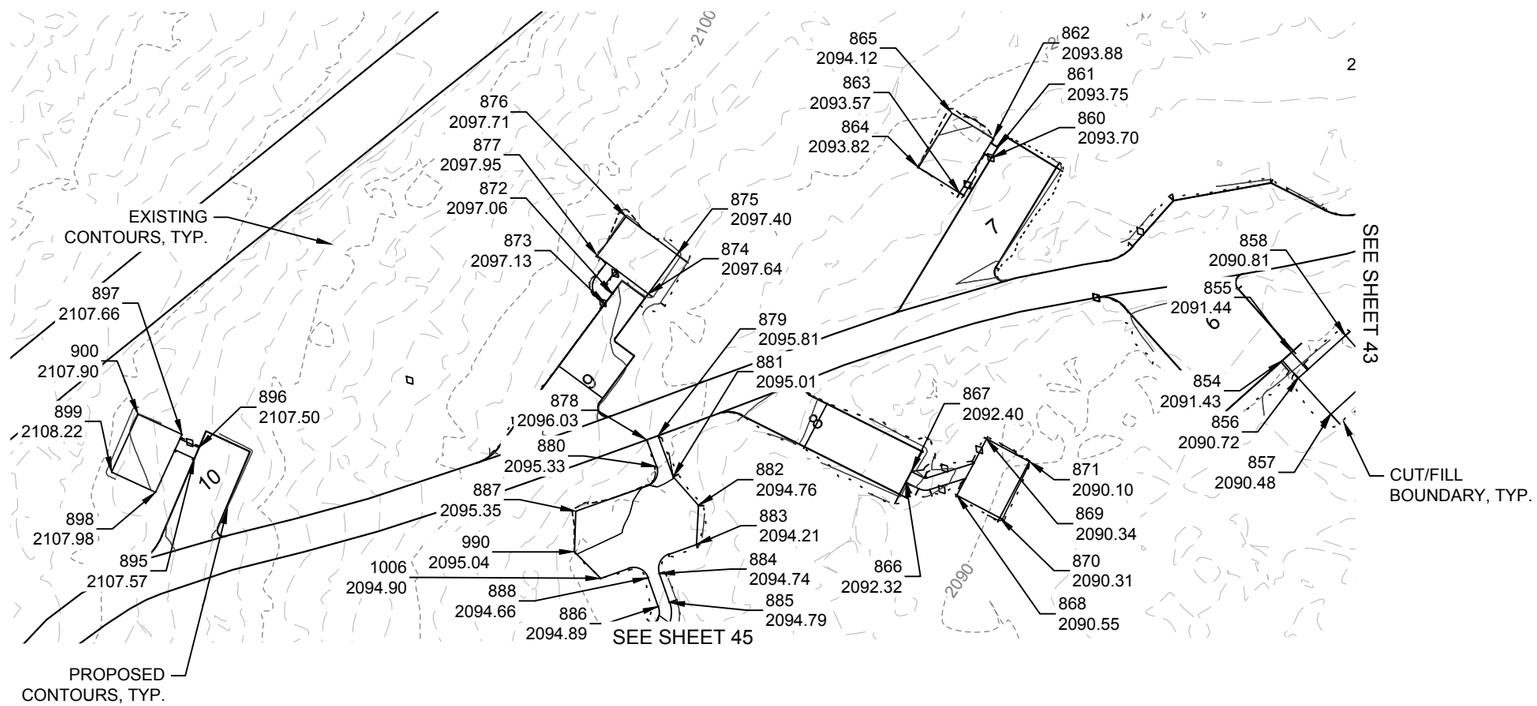

0 25 50
SCALE IN FEET
CONTOUR INTERVAL = 1'
(PLOT SIZE = 11" x 17")

USDA
United States Department of Agriculture
Forest Service

REGION 1
NORTHERN REGION

PROJECT NAME

SAM OWEN CAMPGROUND IMPROVEMENTS

IDAHO PANHANDLE NATIONAL FORESTS

SANDPOINT RANGER DISTRICT

DRAWING TITLE

LIVING AREA AND TRAIL GRADING PLAN - RED SUN LOOP

DATE
APRIL 2026

ARCHIVE NO.

DESIGNER
D. LEBSOCK

DRAWN
D. LEBSOCK

CHECKED
P. DRUYVESTEIN

PROJECT NO.
7431

DWG SHEET NO.
44

SHEET 44 OF 72

4/20/26 09:49 DANIEL LEBSOCK C:\DJA-PWWORK\DJA-PROD\DMS29121\7431 - GRADING LA & TRAILS.DWG:

GENERAL NOTES

1. CAMP LIVING AREAS AND CONNECTING PATHS ARE TO BE CONSTRUCTED IN ACCORDANCE WITH DETAIL 2, SHEET 53 AND DETAIL 5, SHEET 54, RESPECTIVELY.
2. SEE DETAIL 4, SHEET 55 FOR TIMBER CRIB STEP DETAIL.
3. MAXIMUM CUT SLOPE IS 2H : 1V UNLESS OTHERWISE NOTED.
4. MAXIMUM FILL SLOPE IS 3H : 1V UNLESS OTHERWISE NOTED.

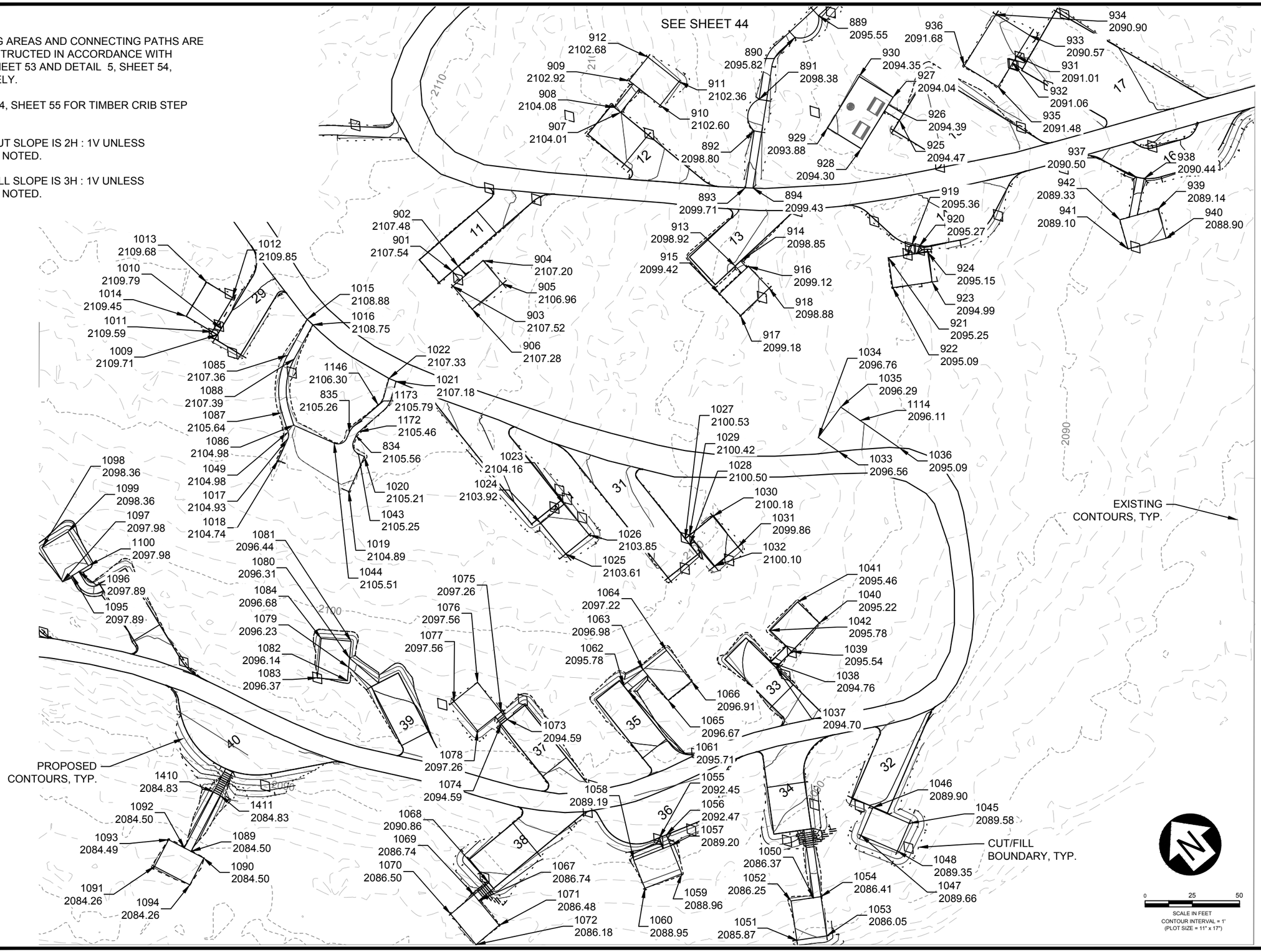

USDA FOREST SERVICE

United States Department of Agriculture
Forest Service

REGION 1
NORTHERN REGION

PROJECT NAME

SAM OWEN CAMPGROUND IMPROVEMENTS

IDAHO PANHANDLE NATIONAL FORESTS

SANDPOINT RANGER DISTRICT

DRAWING TITLE

LIVING AREA AND TRAIL GRADING PLAN - RED SUN LOOP W. & SKIPPING STONE LOOP E.

DATE
APRIL 2026

ARCHIVE NO.

DESIGNER	DWG SHEET NO.
D. LEBSOCK	45
DRAWN: D. LEBSOCK	
CHECKED: P. DRUYVESTEIN	
PROJECT NO. 7431	SHEET 45 OF 72

4/20/26 09:49 DANIEL.LEBSOCK C:\DJA-PWWORK\DJA-PROD\DMS29121\7431 - GRADING LA & TRAILS.DWG:

GENERAL NOTES

1. CAMP LIVING AREAS AND CONNECTING PATHS ARE TO BE CONSTRUCTED IN ACCORDANCE WITH DETAIL 2, SHEET 53 AND DETAIL 5, SHEET 54, RESPECTIVELY.
2. SEE DETAIL 4, SHEET 55 FOR TIMBER CRIB STEP DETAIL.
3. MAXIMUM CUT SLOPE IS 2H : 1V UNLESS OTHERWISE NOTED.
4. MAXIMUM FILL SLOPE IS 3H : 1V UNLESS OTHERWISE NOTED.

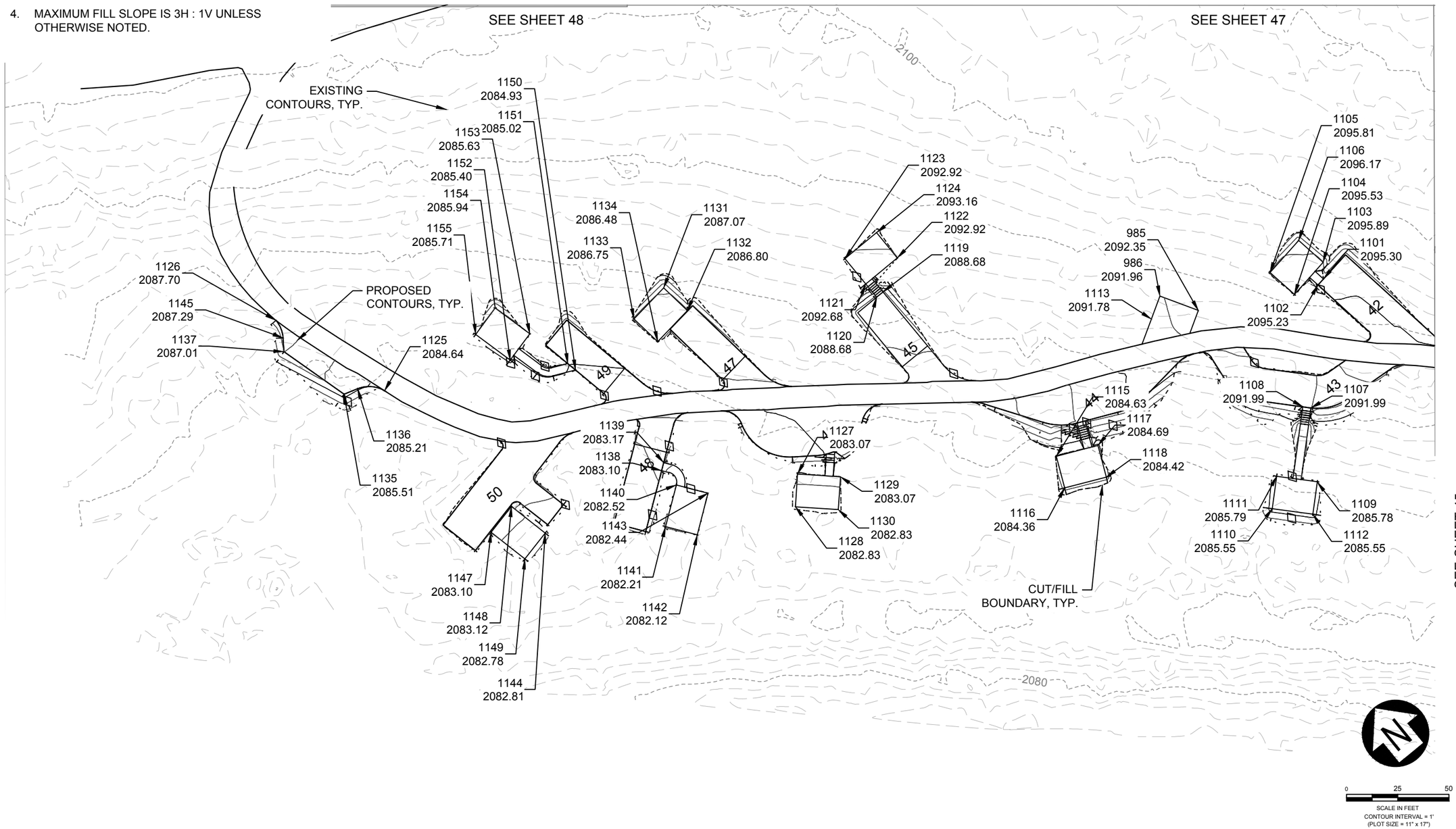

United States Department of Agriculture
Forest Service

REGION 1
NORTHERN REGION

PROJECT NAME

SAM OWEN CAMPGROUND IMPROVEMENTS

IDAHO PANHANDLE NATIONAL FORESTS

SANDPOINT RANGER DISTRICT

DRAWING TITLE

LIVING AREA AND TRAIL GRADING PLAN - SKIPPING STONE LOOP E.

DATE
APRIL 2026

ARCHIVE NO.

DESIGNER	DWG SHEET NO.
D. LEBSOCK	46
DRAWN: D. LEBSOCK	
CHECKED: P. DRUYVESTEIN	SHEET 46 OF 72
PROJECT NO. 7431	

4/20/26 09:49 DANIEL.LEBSOCK C:\DJA-PW\WORK\DJA-PROD\DMS29121\7431 - GRADING LA & TRAILS.DWG:

GENERAL NOTES

1. CAMP LIVING AREAS AND CONNECTING PATHS ARE TO BE CONSTRUCTED IN ACCORDANCE WITH DETAIL 2, SHEET 53 AND DETAIL 5, SHEET 54, RESPECTIVELY.

2. SEE DETAIL 4, SHEET 55 FOR TIMBER CRIB STEP DETAIL.

3. MAXIMUM CUT SLOPE IS 2H : 1V UNLESS OTHERWISE NOTED.

4. MAXIMUM FILL SLOPE IS 3H : 1V UNLESS OTHERWISE NOTED.

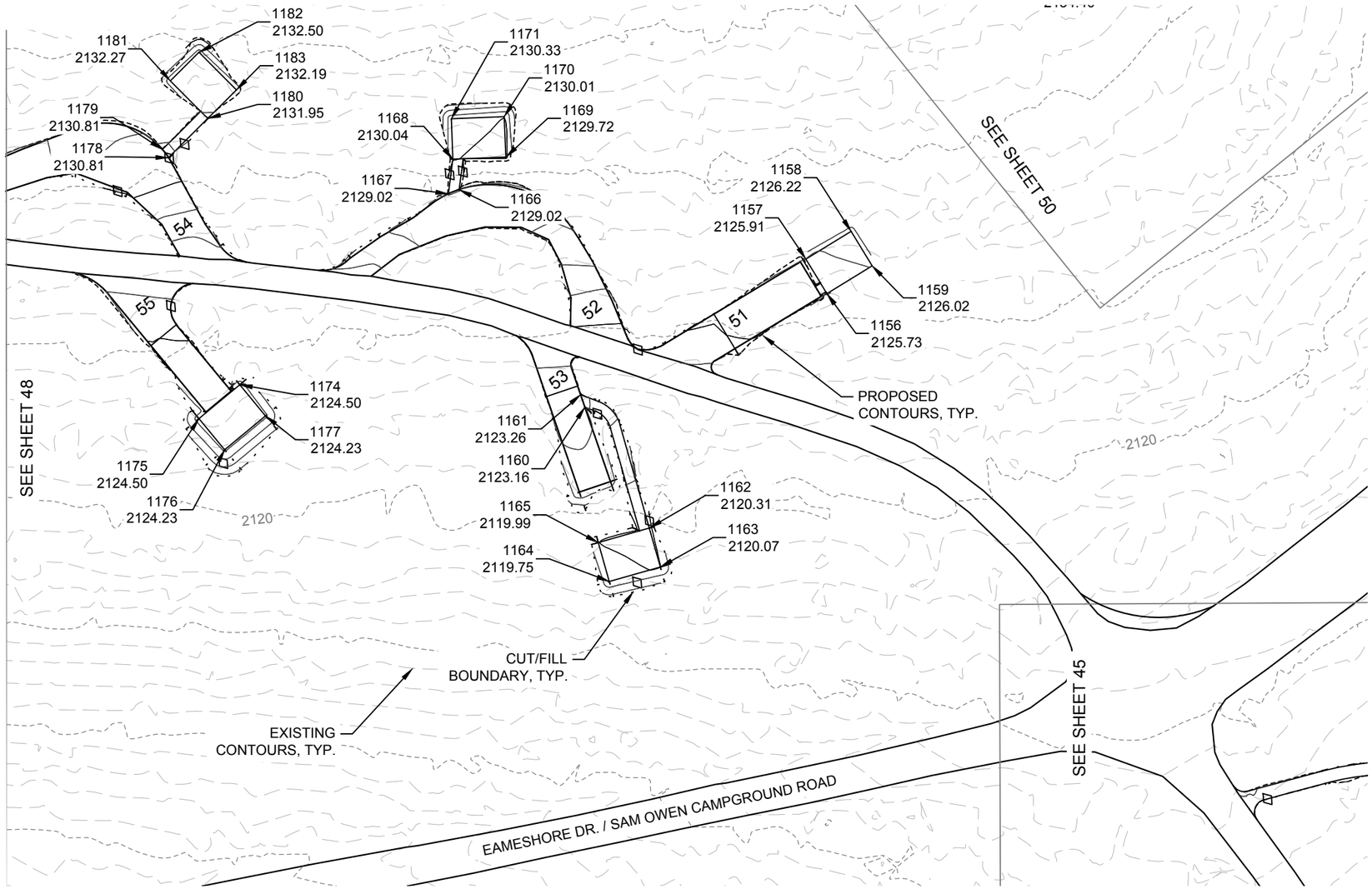

0 25 50
SCALE IN FEET
CONTOUR INTERVAL = 1'
(PLOT SIZE = 11" x 17")

United States Department of Agriculture
Forest Service

REGION 1
NORTHERN REGION

PROJECT NAME

SAM OWEN CAMPGROUND IMPROVEMENTS

IDAHO PANHANDLE NATIONAL FORESTS

SANDPOINT RANGER DISTRICT

DRAWING TITLE

LIVING AREA AND TRAIL GRADING PLAN - DANCING SHADOWS LOOP E.

DATE
APRIL 2026

ARCHIVE NO.

DESIGNER
D. LEBSOCK

DRAWN
D. LEBSOCK

CHECKED
P. DRUYVESTEIN

PROJECT NO.
7431

DWG SHEET NO.
47

SHEET 47 OF 72

4/20/26 09:49 DANIEL.LEBSOCK C:\DJA-PWWORK\DJA-PROD\DMS29121\7431 - GRADING LA & TRAILS.DWG:

GENERAL NOTES

1. CAMP LIVING AREAS AND CONNECTING PATHS ARE TO BE CONSTRUCTED IN ACCORDANCE WITH DETAIL 2, SHEET 53 AND DETAIL 5, SHEET 54, RESPECTIVELY.
2. SEE DETAIL 4, SHEET 55 FOR TIMBER CRIB STEP DETAIL.
3. MAXIMUM CUT SLOPE IS 2H : 1V UNLESS OTHERWISE NOTED.
4. MAXIMUM FILL SLOPE IS 3H : 1V UNLESS OTHERWISE NOTED.

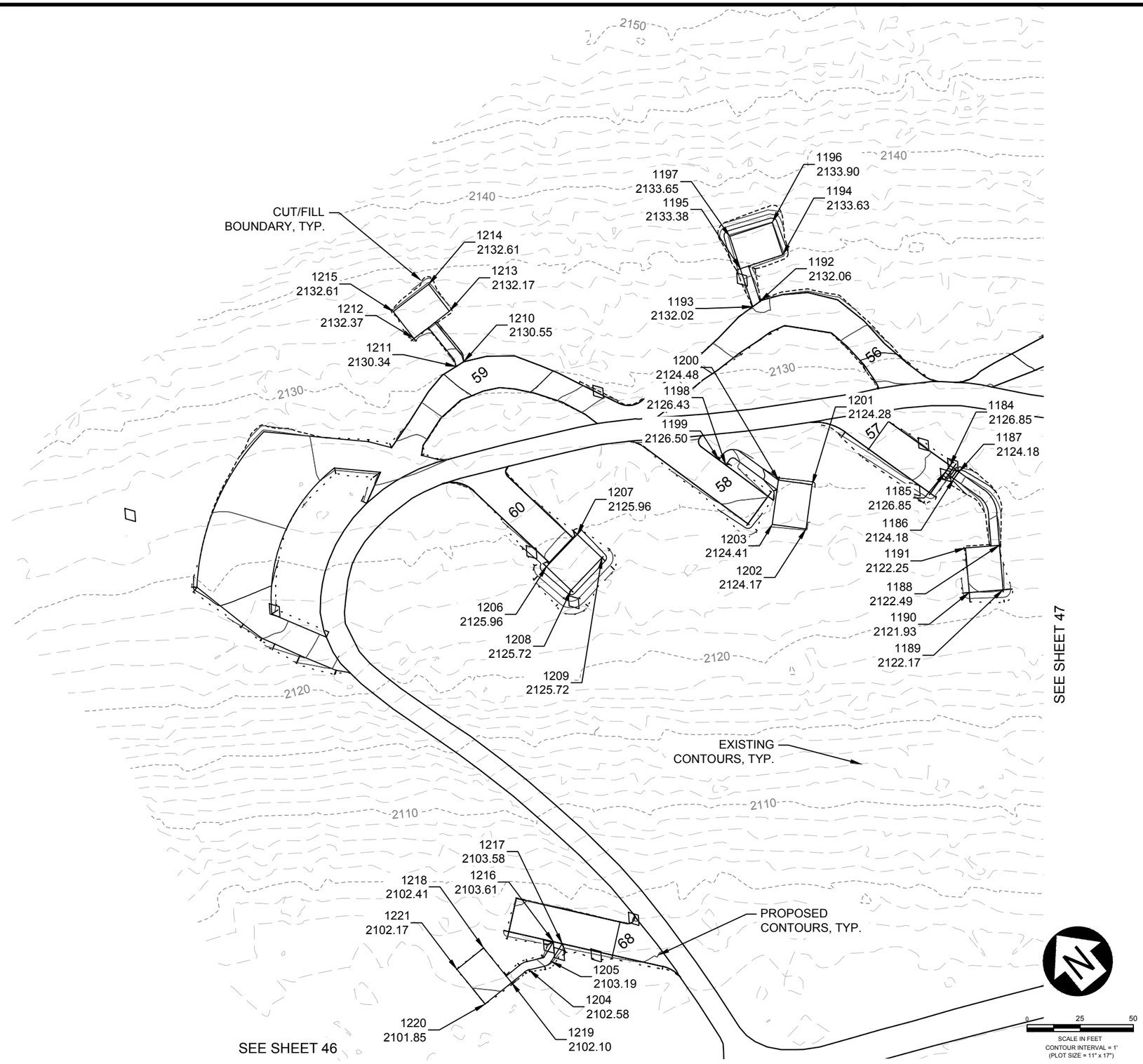

United States Department of Agriculture
Forest Service

REGION 1
NORTHERN REGION

PROJECT NAME

SAM OWEN CAMPGROUND IMPROVEMENTS

IDAHO PANHANDLE NATIONAL FORESTS

SANDPOINT RANGER DISTRICT

DRAWING TITLE

LIVING AREA AND TRAIL GRADING PLAN - DANCING SHADOWS LOOP W.

DATE
APRIL 2026

ARCHIVE NO.

DESIGNER
D. LEBSOCK

DRAWN
D. LEBSOCK

CHECKED
P. DRUYVESTEIN

PROJECT NO.
7431

DWG SHEET NO.
48

SHEET 48 OF 72

4/20/26 09:49 DANIEL.LEBSOCK C:\DJA-PW\WORK\DJA-PROD\DMS29121\7431 - GRADING LA & TRAILS.DWG:

GENERAL NOTES

1. CAMP LIVING AREAS AND CONNECTING PATHS ARE TO BE CONSTRUCTED IN ACCORDANCE WITH DETAIL 2, SHEET 53 AND DETAIL 5, SHEET 54, RESPECTIVELY.
2. SEE DETAIL 4, SHEET 55 FOR TIMBER CRIB STEP DETAIL.
3. MAXIMUM CUT SLOPE IS 2H : 1V UNLESS OTHERWISE NOTED.
4. MAXIMUM FILL SLOPE IS 3H : 1V UNLESS OTHERWISE NOTED.

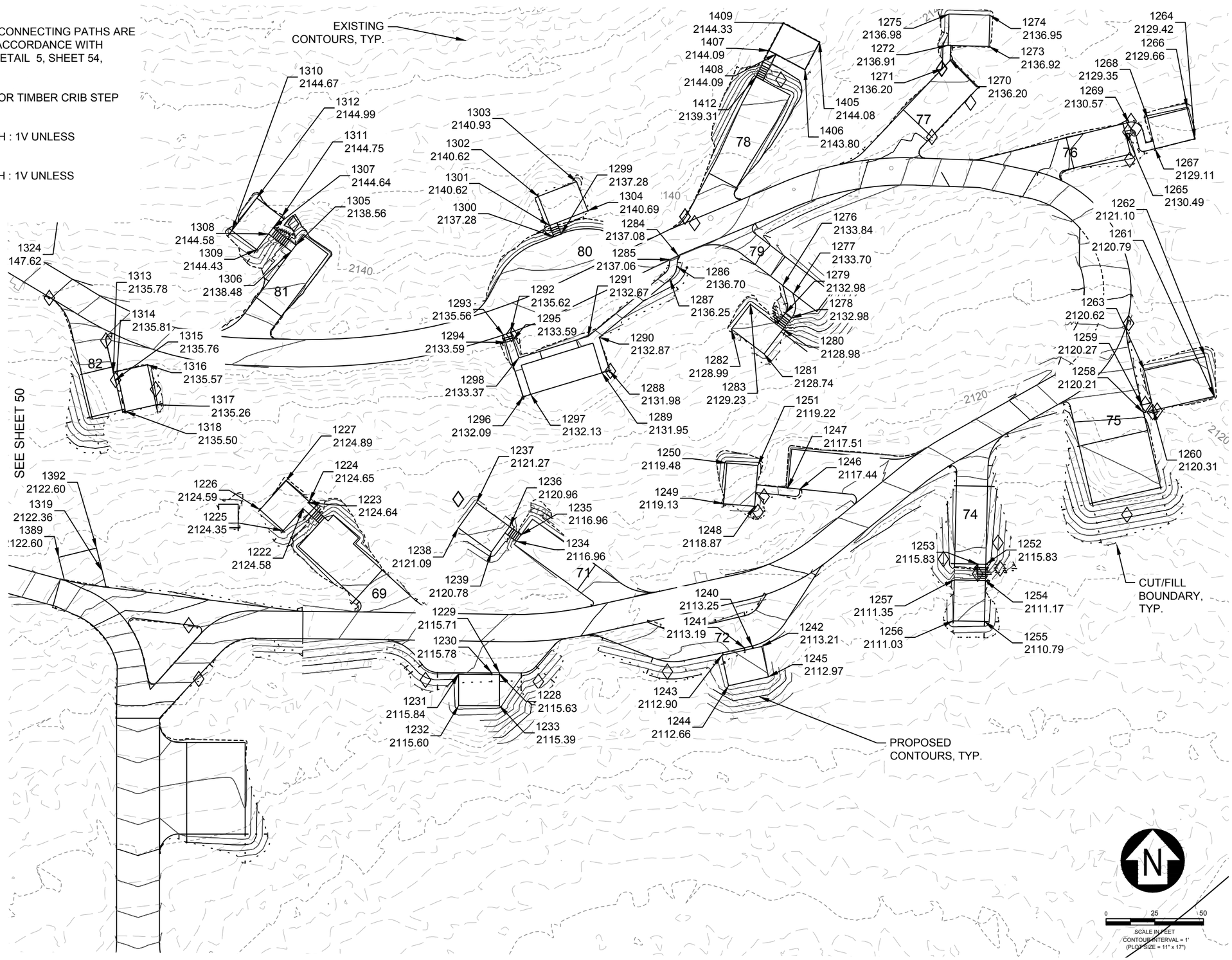

United States Department of Agriculture
Forest Service

REGION 1
NORTHERN REGION

PROJECT NAME

SAM OWEN CAMPGROUND IMPROVEMENTS

IDAHO PANHANDLE NATIONAL FORESTS

SANDPOINT RANGER DISTRICT

DRAWING TITLE

LIVING AREA AND TRAIL GRADING PLAN - SCENTED LEAF LOOP E.

DATE
APRIL 2026

ARCHIVE NO.

DESIGNER
D. LEBSOCK

DRAWN
D. LEBSOCK

CHECKED
P. DRUYVESTEIN

PROJECT NO.
7431

DWG SHEET NO.
49

SHEET 49 OF 72

4/20/26 09:49 DANIEL.LEBSOCK C:\DJA-PW\WORK\DJA-PROD\DMS29121\7431 - GRADING LA & TRAILS.DWG:

GENERAL NOTES

1. CAMP LIVING AREAS AND CONNECTING PATHS ARE TO BE CONSTRUCTED IN ACCORDANCE WITH DETAIL 2, SHEET 53 AND DETAIL 5, SHEET 54, RESPECTIVELY.
2. SEE DETAIL 4, SHEET 55 FOR TIMBER CRIB STEP DETAIL.
3. MAXIMUM CUT SLOPE IS 2H : 1V UNLESS OTHERWISE NOTED.
4. MAXIMUM FILL SLOPE IS 3H : 1V UNLESS OTHERWISE NOTED.

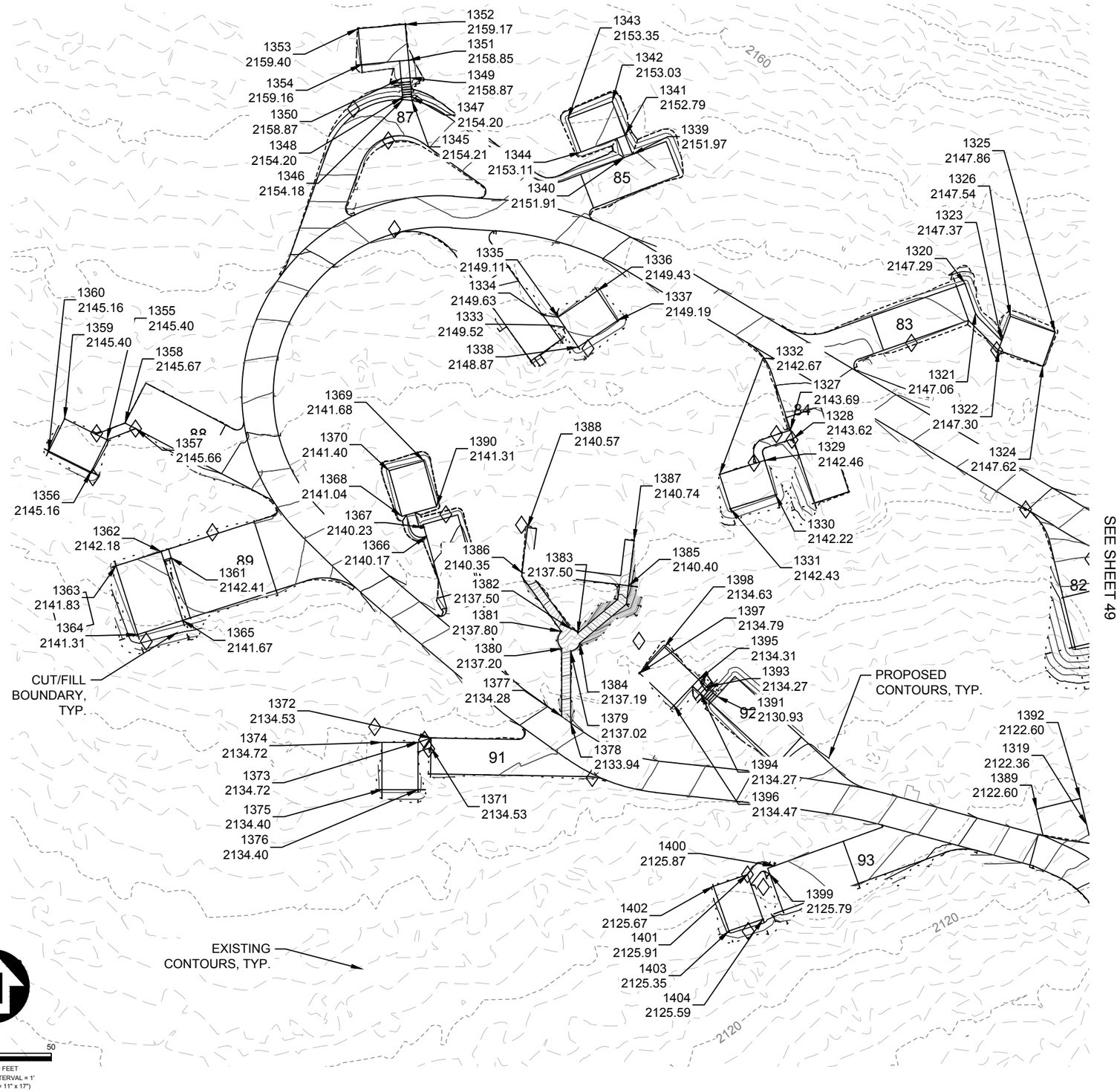

4/20/26 09:49 DANIEL.LEBSOCK C:\DJA-PW\WORK\DJA-PROD\DMS29121\7431 - GRADING LA & TRAILS.DWG:

USDA FOREST SERVICE

United States Department of Agriculture
Forest Service

REGION 1
NORTHERN REGION

PROJECT NAME

SAM OWEN CAMPGROUND IMPROVEMENTS

IDAHO PANHANDLE NATIONAL FORESTS

SANDPOINT RANGER DISTRICT

DRAWING TITLE

LIVING AREA AND TRAIL GRADING PLAN - SCENTED LEAF LOOP W.

DATE APRIL 2026	
ARCHIVE NO.	
DESIGNER D. LEBSOCK	DWG SHEET NO. 50
DRAWN D. LEBSOCK	
CHECKED P. DRUYVESTEIN	
PROJECT NO. 7431	SHEET 50 OF 72

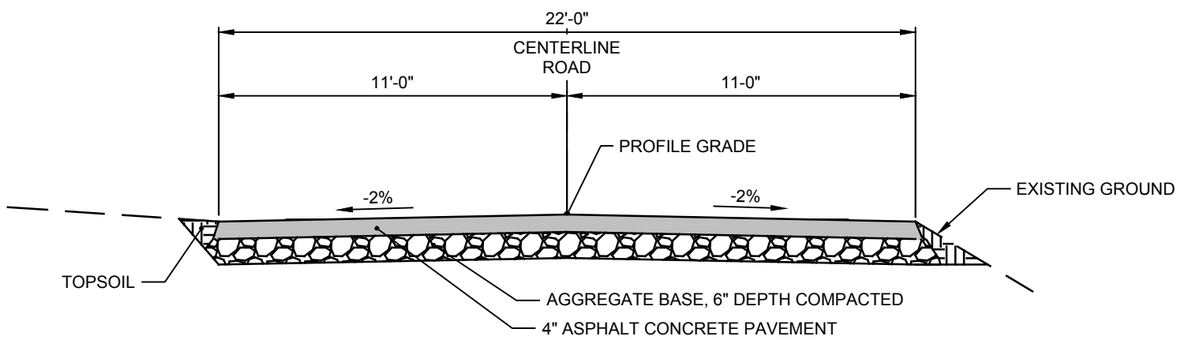

STA 10+00 to STA 11+53.54
TYPICAL SECTION 1
NOT TO SCALE

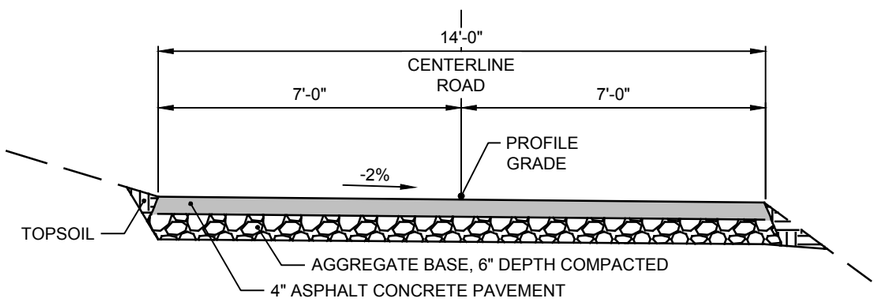

STA 12+57.42 to 17+42
STA 27+72.08 to 31+92.34
TYPICAL SECTION 2
NOT TO SCALE

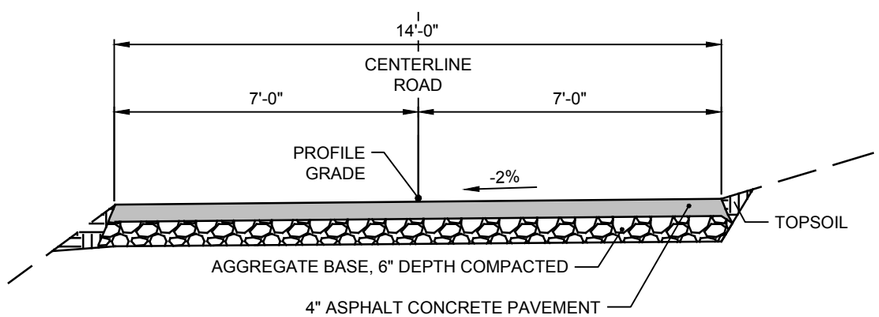

STA 17+42 to 27+72.08

TYPICAL SECTION 3
NOT TO SCALE

PI Station	Northing	Easting	Distance	Direction
10+00.00	2,389,521.2460'	2,493,920.1392'	153.544'	N0° 00' 00"E
11+53.54	2,389,674.7903'	2,493,920.1392'	66.652'	N43° 37' 21"E
12+20.20	2,389,723.0399'	2,493,966.1230'	73.652'	S89° 26' 44"E
12+92.38	2,389,722.3270'	2,494,039.7719'	92.357'	S88° 57' 06"E
13+84.73	2,389,720.6370'	2,494,132.1135'	123.500'	N77° 41' 49"E
15+08.03	2,389,746.9528'	2,494,252.7771'	95.093'	N50° 55' 10"E
16+02.24	2,389,806.9005'	2,494,326.5937'	225.818'	N60° 42' 30"E
18+27.99	2,389,917.3827'	2,494,523.5389'	174.485'	N77° 51' 23"W
18+41.78	2,389,954.0880'	2,494,352.9585'	67.261'	N87° 57' 14"W
19+09.04	2,389,956.4893'	2,494,285.7402'	96.964'	S67° 27' 03"W
20+04.95	2,389,919.3060'	2,494,196.1887'	128.686'	S64° 15' 59"W
21+33.64	2,389,863.4323'	2,494,080.2657'	77.361'	S88° 57' 22"W
22+08.96	2,389,862.0228'	2,494,002.9176'	72.256'	N88° 21' 40"W
22+81.22	2,389,864.0892'	2,493,930.6908'	48.166'	N57° 42' 36"W
23+27.22	2,389,889.8198'	2,493,889.9733'	251.724'	N59° 12' 24"W
25+78.94	2,390,018.6884'	2,493,673.7372'	275.279'	N85° 53' 36"W
28+52.97	2,390,038.4025'	2,493,399.1649'	254.411'	S45° 42' 36"E
28+62.16	2,389,860.7503'	2,493,581.2762'	85.657'	S49° 51' 02"E
29+47.80	2,389,805.5202'	2,493,646.7496'	54.212'	S54° 22' 10"E
30+02.01	2,389,773.9387'	2,493,690.8124'	70.850'	S83° 51' 53"E
30+71.97	2,389,766.3665'	2,493,761.2565'	39.470'	S81° 21' 17"E
31+11.44	2,389,760.4334'	2,493,800.2784'	82.922'	S74° 54' 40"E
31+94.34	2,389,738.8474'	2,493,880.3414'	34.200'	S65° 52' 53"E

SCENTED LEAF LOOP
CENTERLINE PI TABLE

United States Department of Agriculture
Forest Service

REGION 1
NORTHERN REGION

PROJECT NAME
SAM OWEN CAMPGROUND IMPROVEMENTS

IDAHO PANHANDLE NATIONAL FORESTS

SANDPOINT RANGER DISTRICT

DRAWING TITLE
CIVIL DETAILS

DATE
APRIL 2026

ARCHIVE NO.

DESIGNER
D. LEBSOCK

DRAWN
D. LEBSOCK

CHECKED
P. DRUYVESTEIN

PROJECT NO.
7431

DWG SHEET NO.
51

SHEET 51 OF 72

4/21/26 14:50 DANIEL.LEBSOCK C:\DJA-PWWORK\DJA-PROD\DMS29121\7431 - DETAILS.DWG;

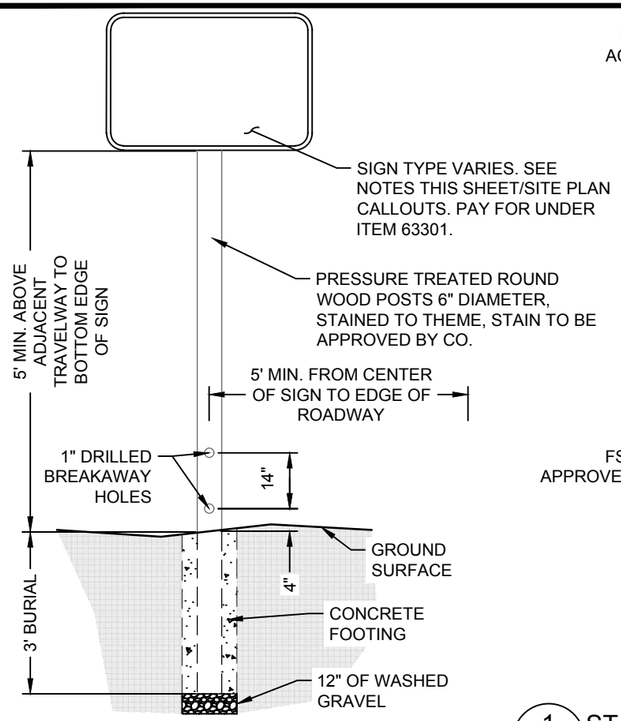

1 / 52 STANDARD SIGN INSTALLATION DETAIL
NOT TO SCALE

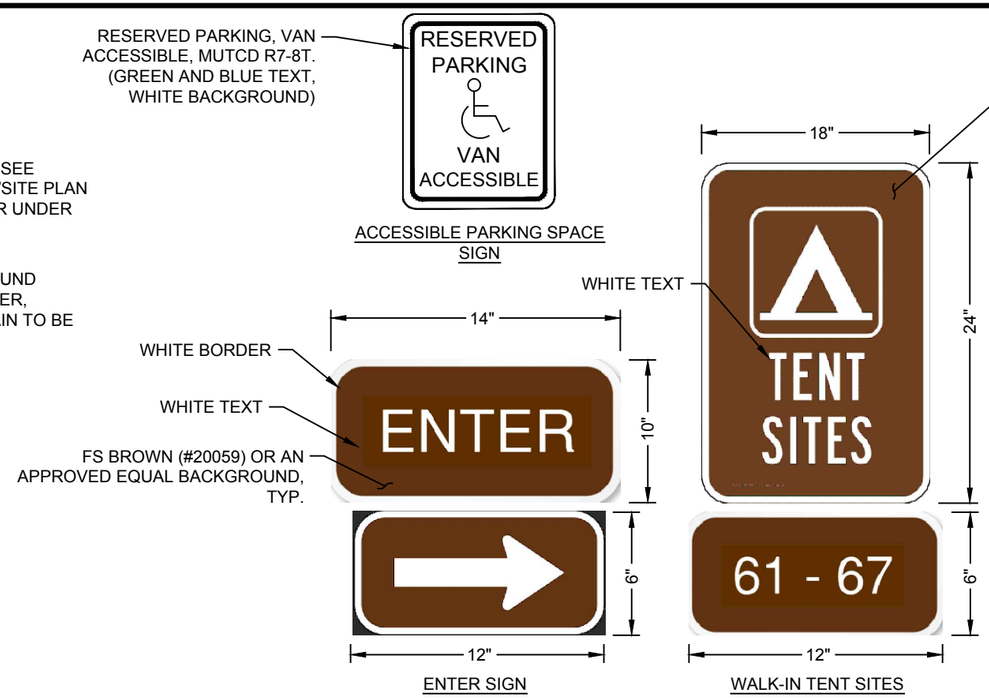

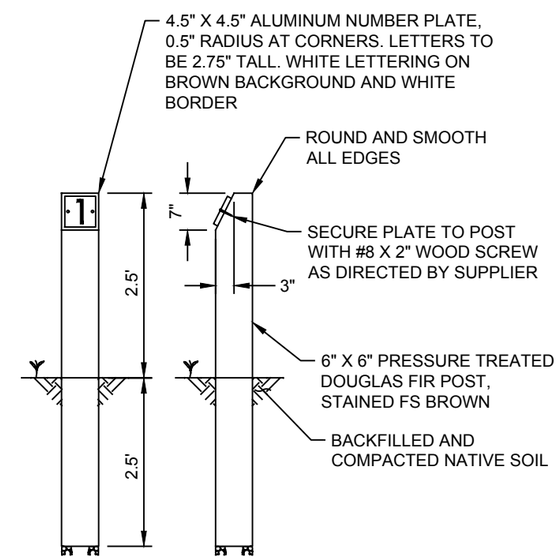

2 / 52 SITE MARKER DETAIL
NOT TO SCALE

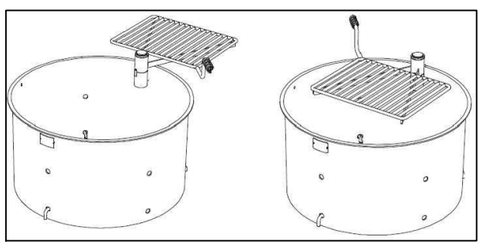

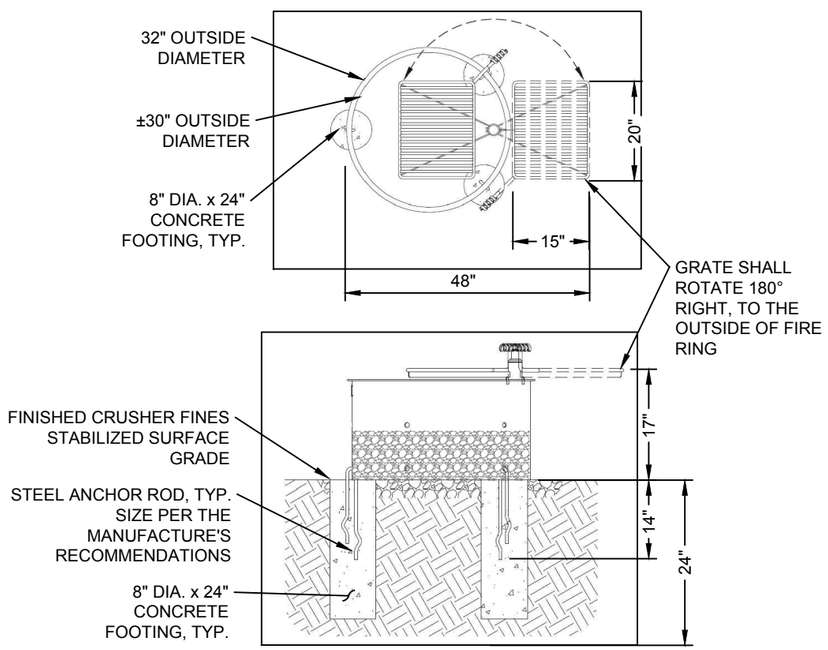

NOTE:

1. REFER SITE PLAN SHEETS 17 THROUGH 25 FOR FIRE RING LOCATIONS WITHIN EACH SITE, FIRE RING LOCATION MAY BE ADJUSTED IN THE FIELD BY THE CO. CONTRACTING OFFICER'S REPRESENTATIVE MUST APPROVE FIRE RING LOCATIONS PRIOR TO INSTALLATION. SEE DETAIL 2, SHEET 53 FOR FURTHER LAYOUT INFORMATION.
2. FILL THE BOTTOM PORTION OF THE FIRE RING'S INTERIOR WITH COARSE AGGREGATE 10 INCHES ABOVE FINISH GRADE OF THE SURROUNDING PAD, PER THE MANUFACTURE'S RECOMMENDATION'S AND PER THE DIRECTION OF THE CO.
3. MODEL: PILOT ROCK - FSW-30/18/PA OR APPROVED EQUAL.

3 / 52 ACCESSIBLE FIRE RING DETAIL
NOT TO SCALE

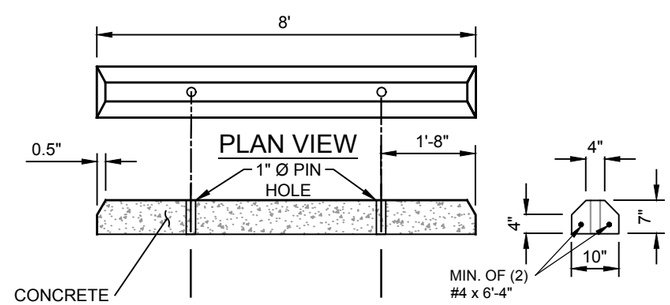

NOTE:

1. PIN DOWN CURBS ARE #5 REBAR X 2' LONG. SET THE TOP OF THE #5 REBAR 1/2" BELOW THE TOP OF THE CURB. GROUT HOLES ARE SETTING.
2. APPROVED COMMERCIAL PIN DOWN CURBS ARE ACCEPTABLE.

4 / 52 TYPICAL PRECAST CONCRETE PIN DOWN CURB STOP
NOT TO SCALE

United States Department of Agriculture
Forest Service

REGION 1
NORTHERN REGION

PROJECT NAME
SAM OWEN CAMPGROUND IMPROVEMENTS

IDAHO PANHANDLE NATIONAL FORESTS

SANDPOINT RANGER DISTRICT

DRAWING TITLE
CIVIL DETAILS

DATE
APRIL 2026

ARCHIVE NO.

DESIGNER
D. LEBSOCK

DRAWN
D. LEBSOCK

CHECKED
P. DRUYVESTEIN

PROJECT NO.
7431

DWG SHEET NO.
52

SHEET 52 OF 72

4/21/26 14:50 DANIEL.LEBSOCK C:\DJA-PWWORK\DJA-PROD\DMS29121\7431 - DETAILS.DWG;

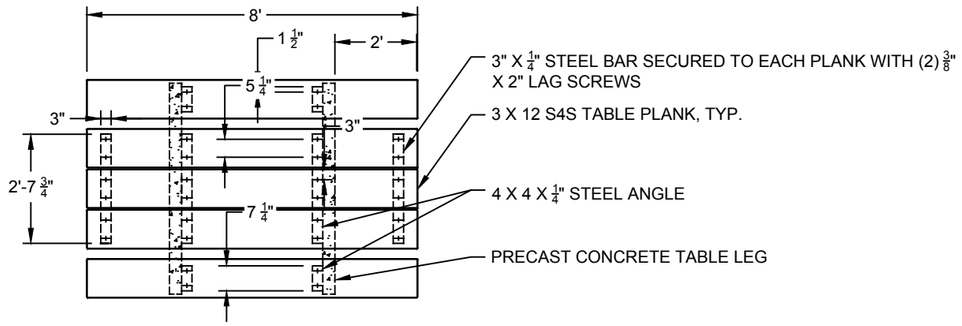

PLAN VIEW

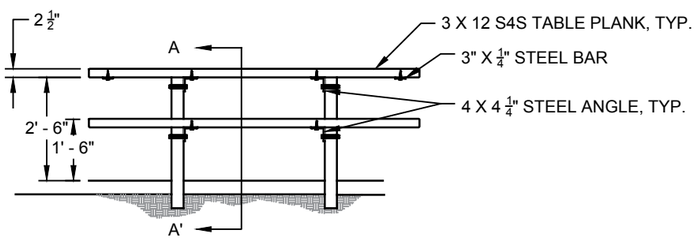

FRONT ELEVATION

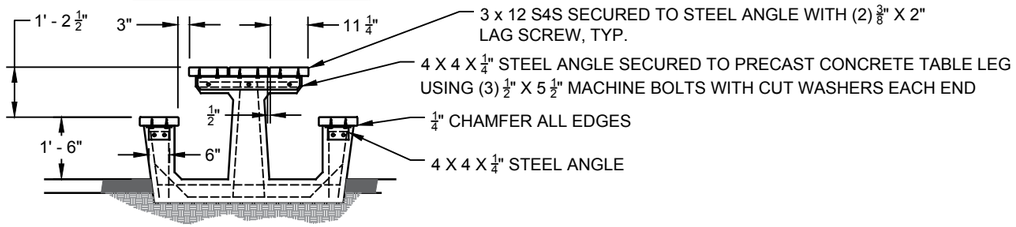

SECTION A - A'

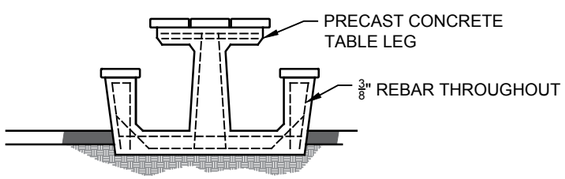

SECTION A - A'

NOTE:

1. PRECAST TABLE LEGS ARE TO BE PLUMB. TABLE TOPS AND BENCHES ARE TO BE LEVEL.
2. THE HEIGHT OF THE BENCHES AND TABLE TOP ARE CRITICAL. ANY CHANGE TO THESE ARE TO BE REVIEWED BY THE FOREST ACCESSIBILITY COORDINATOR PER FS OUTDOOR RECREATION ACCESSIBILITY GUIDELINES.
3. SEE PROJECT SPECIFICATIONS FOR DESIGN AND FINISH DETAILS.

1/53 ACCESSIBLE PICNIC TABLE DETAIL
NOT TO SCALE

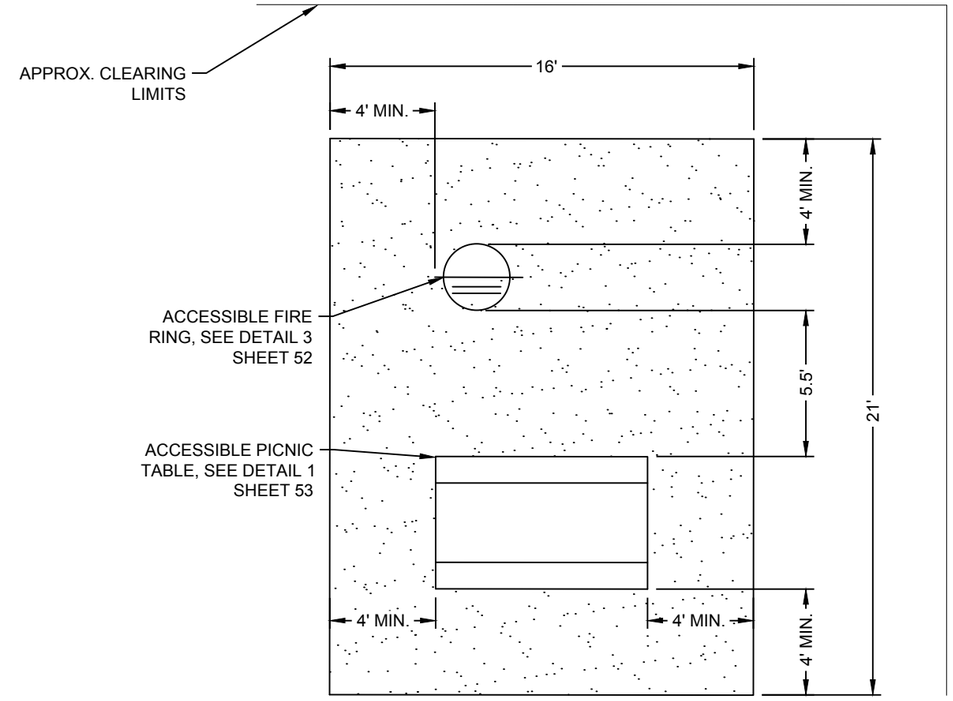

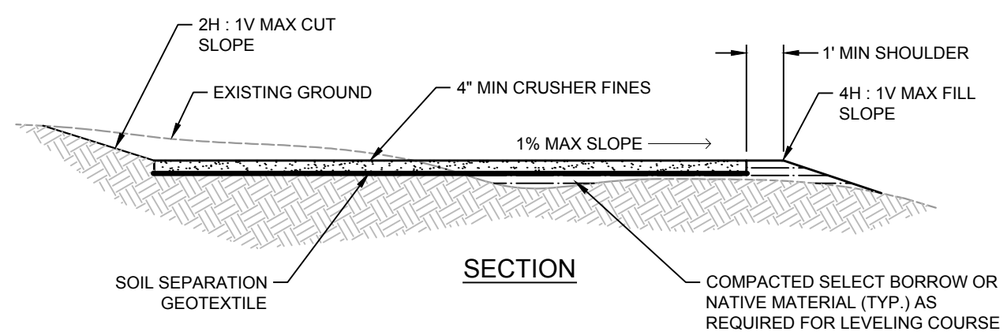

SECTION

NOTES:

1. REMOVE AND CONSERVE TOP SOIL PRIOR TO CUTS AND FILLS. PLACE TOPSOIL AS DIRECTED ON DISTURBED AREAS AFTER LIVING AREA AND PATH CONSTRUCTION IS COMPLETE BY CO.
2. LIVING AREA LOCATIONS ARE TO BE APPROVED BY CO.

2/53 SINGLE SITE LIVING AREA DETAIL
NOT TO SCALE

United States Department of Agriculture
Forest Service

REGION 1
NORTHERN REGION

PROJECT NAME

SAM OWEN CAMPGROUND IMPROVEMENTS

IDAHO PANHANDLE NATIONAL FORESTS

SANDPOINT RANGER DISTRICT

DRAWING TITLE

CIVIL DETAILS

DATE
APRIL 2026

ARCHIVE NO.

DESIGNER
D. LEBSOCK

DRAWN
D. LEBSOCK

CHECKED
P. DRUYVESTEIN

PROJECT NO.
7431

DWG SHEET NO.
53

SHEET 53 OF 72

4/21/26 14:50 DANIEL.LEBSOCK C:\DJA-PWWORK\DJA-PROD\DMS29121\7431 - DETAILS.DWG;

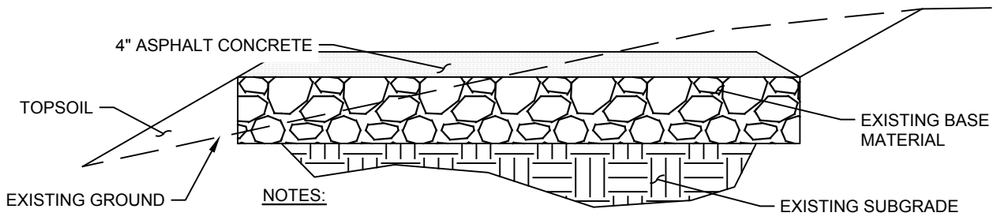

NOTES:

1. EXISTING ASPHALT CONCRETE, BASE, AND SUBGRADE DETAILS PROVIDED FROM FIELD INVESTIGATION PERFORMED ON OCT. 30 & 31, 2023.
2. BASE AND SUBGRADE DEPTHS NOTED TO VARY THROUGHOUT SAM OWEN CAMPGROUND.

1/54 EXISTING ASPHALT SECTION
NOT TO SCALE

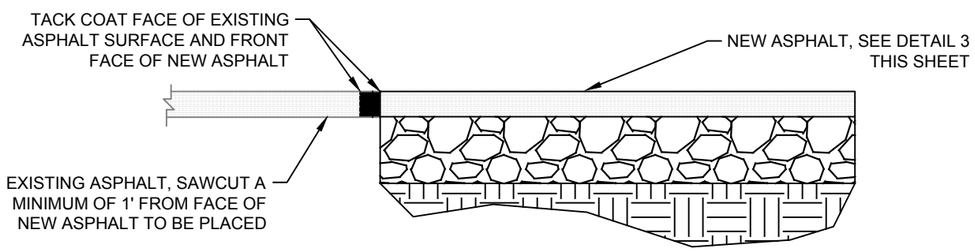

2/54 PLACEMENT OF NEW ASPHALT ADJACENT TO EXISTING ASPHALT
NOT TO SCALE

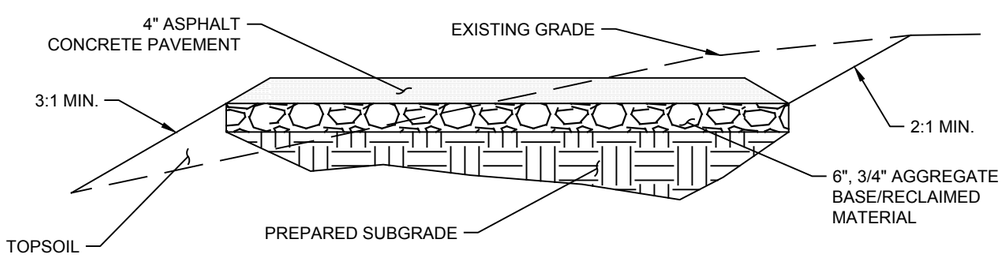

3/54 ASPHALT CONCRETE PAVEMENT BASE SECTION
NOT TO SCALE

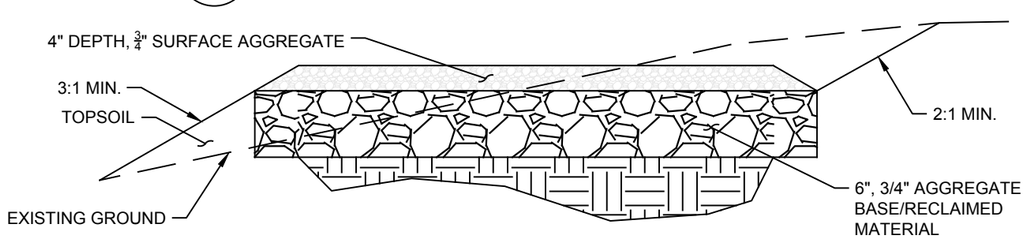

4/54 SURFACE AGGREGATE BASE SECTION
NOT TO SCALE

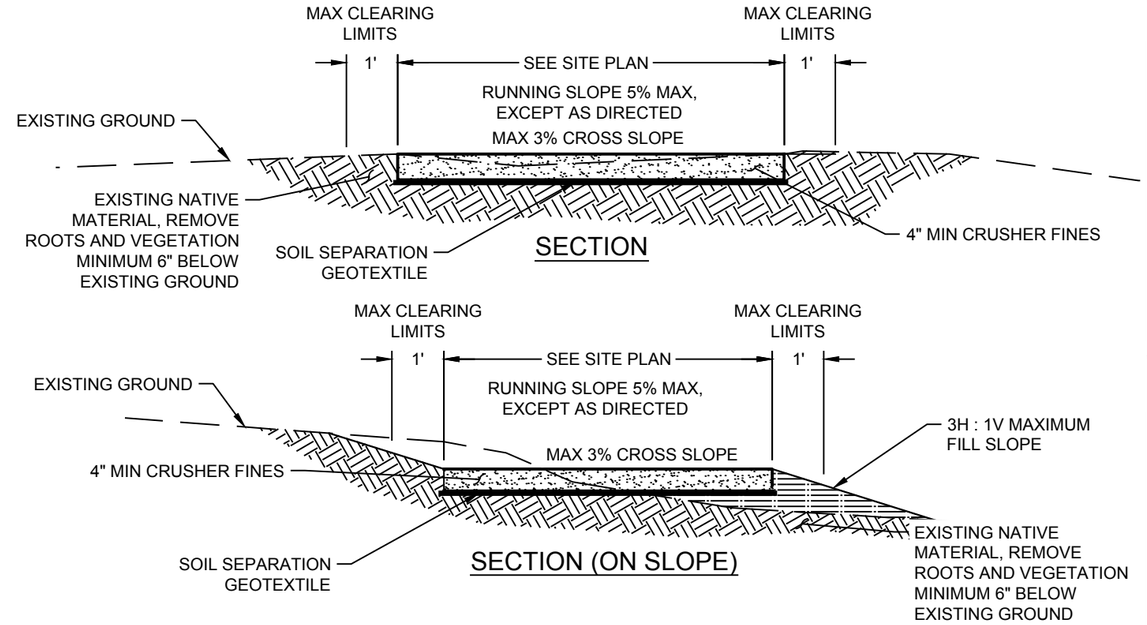

5/54 CRUSHER FINE PATH DETAIL
NOT TO SCALE

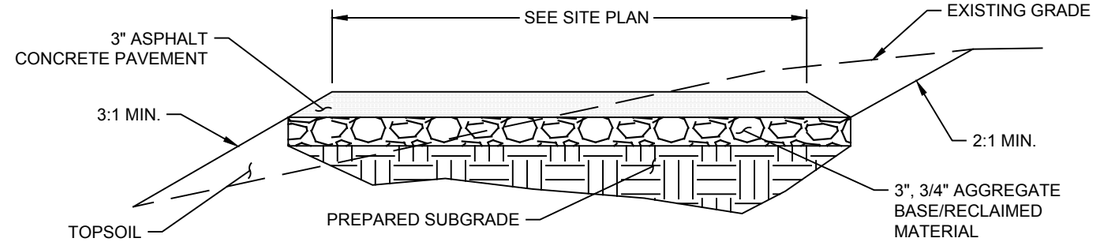

6/54 ASPHALT CONCRETE PAVEMENT (ACCESSIBLE TRAIL)
NOT TO SCALE

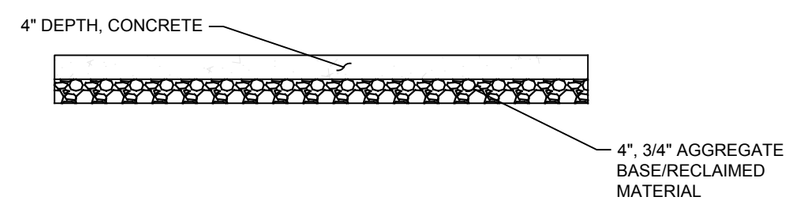

7/54 CONCRETE GARBAGE PAD TYP. SECTION
NOT TO SCALE

United States Department of Agriculture
Forest Service

REGION 1
NORTHERN REGION

PROJECT NAME
SAM OWEN CAMPGROUND IMPROVEMENTS

IDAHO PANHANDLE NATIONAL FORESTS

SANDPOINT RANGER DISTRICT

DRAWING TITLE
CIVIL DETAILS

DATE
APRIL 2026

ARCHIVE NO.

DESIGNER
D. LEBSOCK

DRAWN
D. LEBSOCK

CHECKED
P. DRUYVESTEIN

PROJECT NO.
7431

DWG SHEET NO.
54

SHEET 54 OF 72

4/21/26 14:50 DANIEL.LEBSOCK C:\DJA-PW\WORK\DJA-PROD\DMS29121\7431 - DETAILS.DWG;

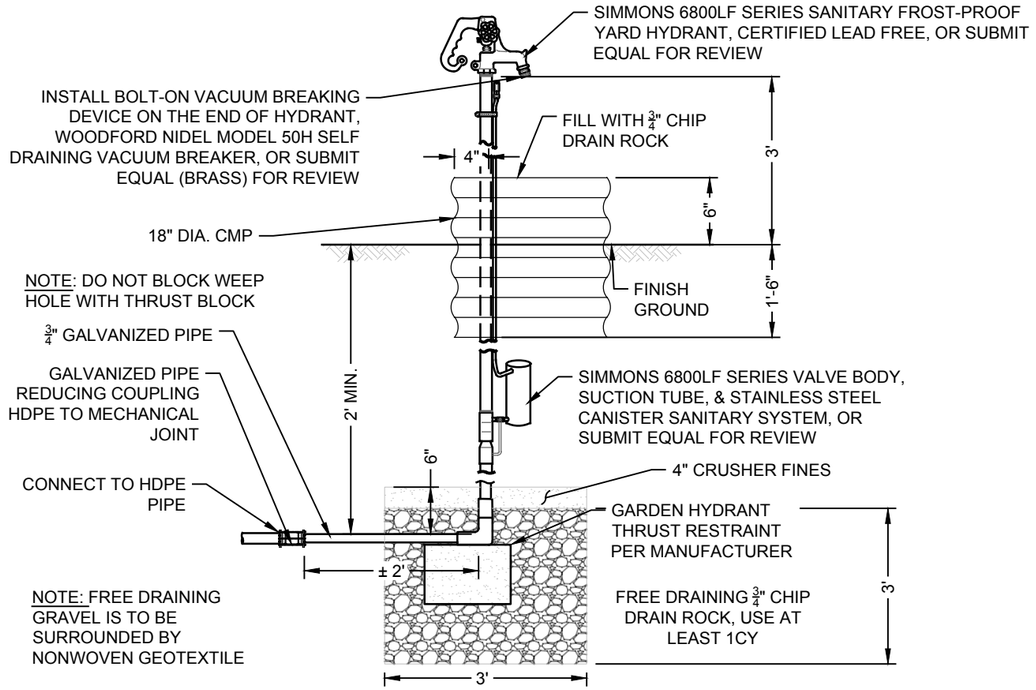

1/55 HOST SITE WATER HYDRANT ASSEMBLY

NOT TO SCALE

NOTE:

1. HOST SITE UTILITY ALIGNMENT AND CONFIGURATION MAY BE ADJUSTED TO MATCH EXISTING CONDITIONS AT EACH INDIVIDUAL HOST SITE. IT IS IMPORTANT TO MAINTAIN THE UTILITY SPACING SHOWN IN THIS DETAIL.

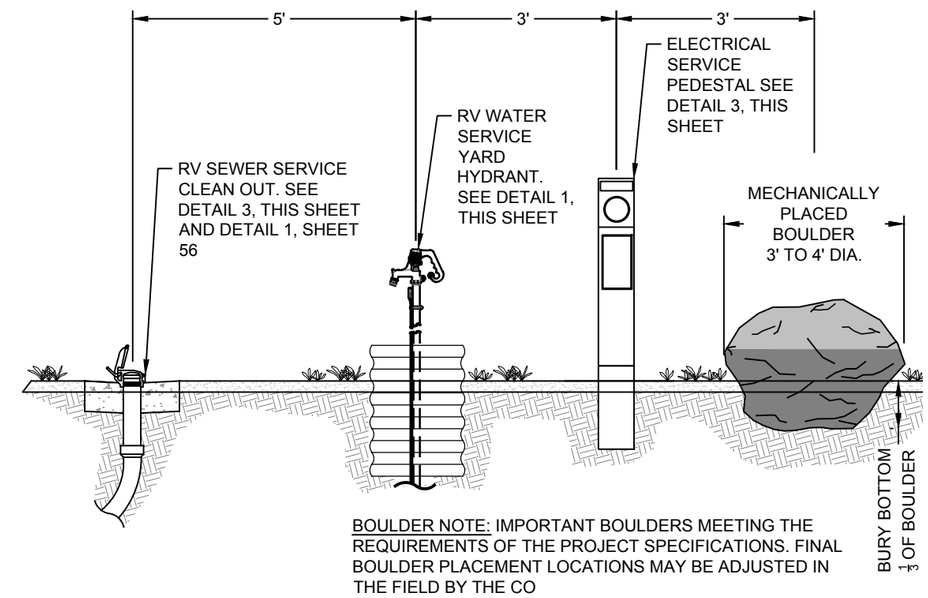

2/55 HOST SITE UTILITY SERVICES DETAIL

NOT TO SCALE

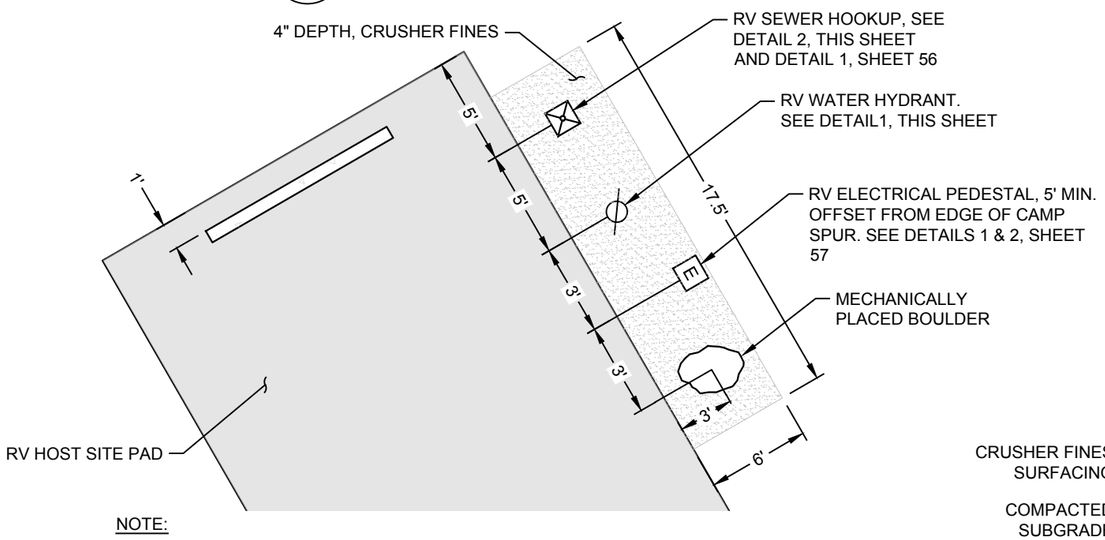

NOTE:

1. HOST SITE UTILITY ALIGNMENT AND CONFIGURATION MAY BE ADJUSTED TO MATCH EXISTING CONDITIONS AT EACH INDIVIDUAL HOST SITE. IT IS IMPORTANT TO MAINTAIN THE UTILITY SPACING SHOWN IN THIS DETAIL.

3/55 HOST SITE UTILITY SERVICES PLAN VIEW

NOT TO SCALE

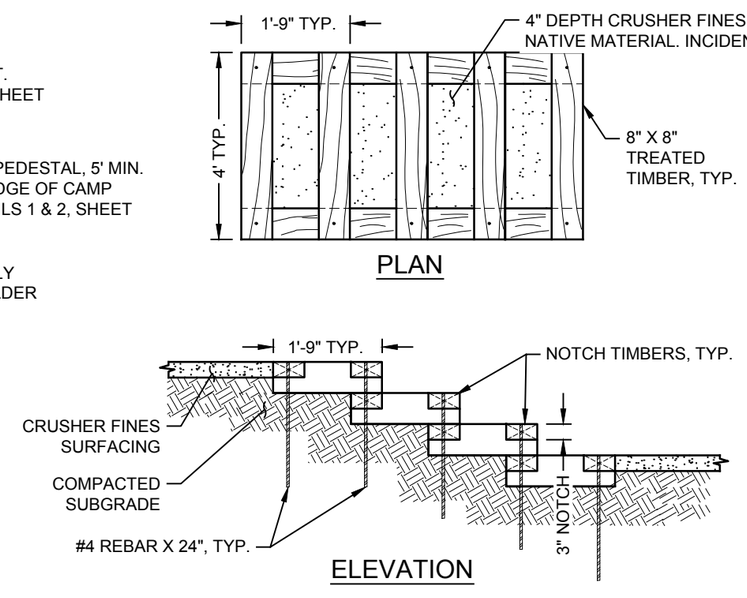

NOTE:

1. COMPACT SUBGRADE PRIOR TO CONSTRUCTION OF STEPS.
2. NOTCH TIMBERS AS SHOWN IN DETAIL. TREAT BARE WOOD WITH APPROVED PRESERVATIVE WOOD TREATMENT.
3. ALL WORK REQUIRED TO CONSTRUCT TIMBER CRIB STEPS IS INCIDENTAL TO PAY ITEM #64001A
4. DRAWINGS ARE TYPICAL. EARTHEN OR AGGREGATE MATERIAL ADJACENT OR UNDER STEPS MAY VARY DEPENDING ON LOCATION OF STEPS.
5. MAX CUT SLOPE OF 2H : 1V AWAY FROM STEPS.
6. MAX FILL SLOPE OF 3H : 1V AWAY FROM STEPS

4/55 TIMBER CRIB STEP DETAIL

NOT TO SCALE

United States Department of Agriculture
Forest Service

REGION 1
NORTHERN REGION

PROJECT NAME

SAM OWEN CAMPGROUND IMPROVEMENTS

IDAHO PANHANDLE NATIONAL FORESTS

SANDPOINT RANGER DISTRICT

DRAWING TITLE

CIVIL DETAILS - UTILITIES

DATE APRIL 2026	
ARCHIVE NO.	
DESIGNER D. LEBSOCK	DWG SHEET NO. 55
DRAWN D. LEBSOCK	
CHECKED P. DRUYVESTEIN	
PROJECT NO. 7431	SHEET 55 OF 72

4/21/26 14:50 DANIEL.LEBSOCK C:\DJA-PWWORK\DJA-PROD\DMS29121\7431 - DETAILS.DWG;

NOTES:

1. TANK TO BE MANUFACTURED BY A CERTIFIED PRECAST MANUFACTURER. MANUFACTURER TO DESIGN REINFORCEMENT AND WALL THICKNESS FOR BELOW GROUND SEWAGE STORAGE AND COMPLY WITH LOCAL AND IDAHO DEQ REQUIREMENTS.
2. CONTRACTOR TO PLACE, BED, AND BACKFILL TANK PER THE SPECIFICATIONS AND MANUFACTURERS RECOMMENDATIONS.
3. HIGH LEVEL ALARM FLOAT IS TO BE PLACED BELOW THE INVERT OF INLET PVC. FLOAT CONTROL PANEL TO BE PLACED ON 4" X 4" TREATED POST, BURIED 3' MINIMUM.
   3.1. SEE ELECTRICAL SHEETS FOR FLOAT AND CONTROL PANEL INFORMATION

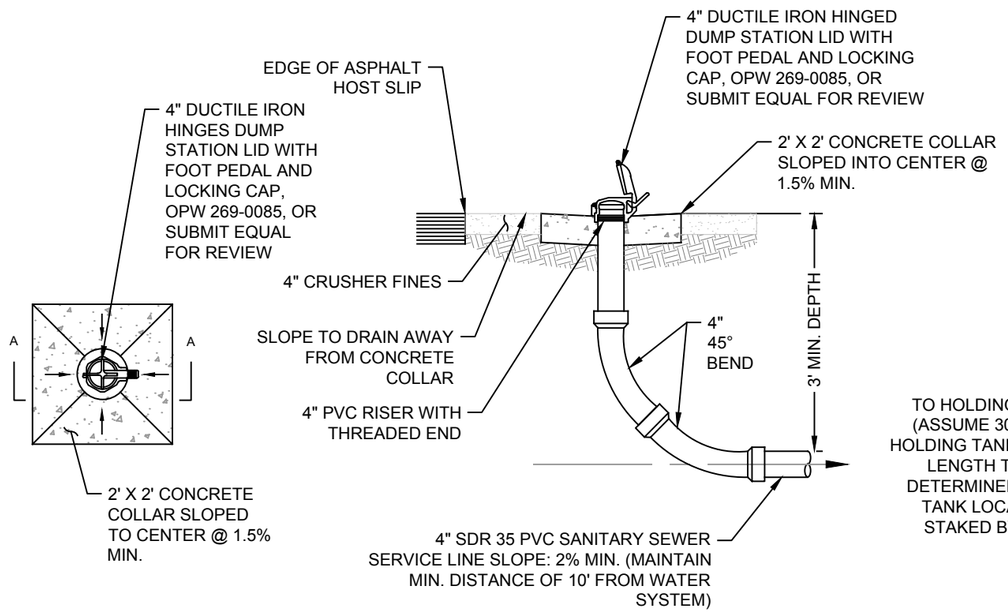

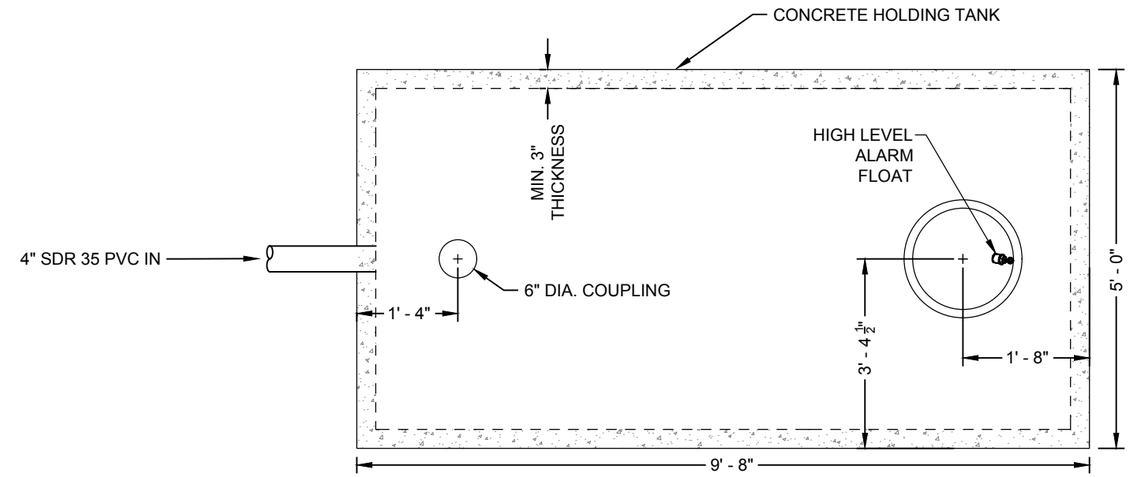

PLAN

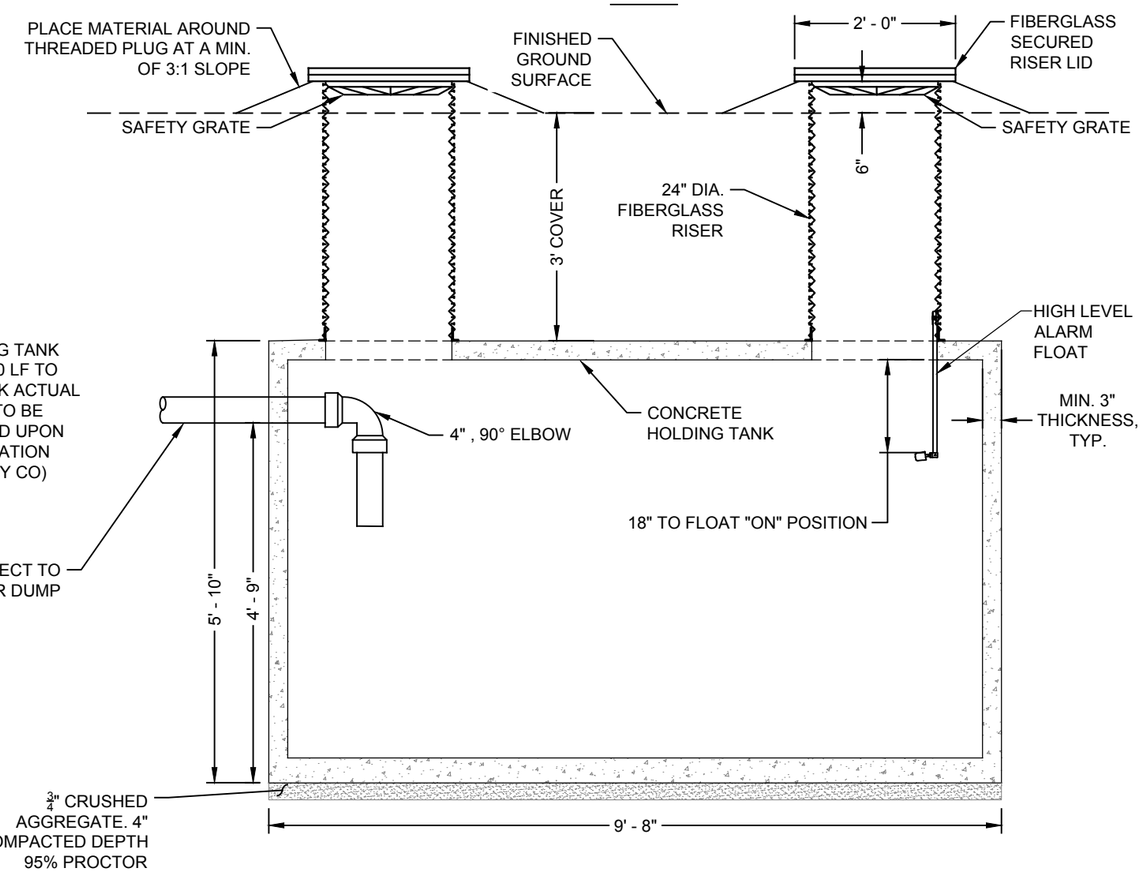

1/56 HOST SITE SEWER DUMP W/ 1000 GALLON CONCRETE HOLDING TANK

NOT TO SCALE

USDA FOREST SERVICE

United States Department of Agriculture
Forest Service

REGION 1
NORTHERN REGION

PROJECT NAME

SAM OWEN CAMPGROUND IMPROVEMENTS

IDAHO PANHANDLE NATIONAL FORESTS

SANDPOINT RANGER DISTRICT

DRAWING TITLE

CIVIL DETAILS - UTILITIES

DATE APRIL 2026	
ARCHIVE NO.	
DESIGNER D. LEBSOCK	DWG SHEET NO. 56
DRAWN D. LEBSOCK	
CHECKED P. DRUYVESTEIN	
PROJECT NO. 7431	SHEET 56 OF 72

4/21/26 14:50 DANIEL.LEBSOCK C:\DJA-PWWORK\DJA-PROD\DMS29121\7431 - DETAILS.DWG;

8 Millennium Series Power Outlet Pedestals

125 Amps | Unmetered | 120/240 VAC

U5200-XL-75

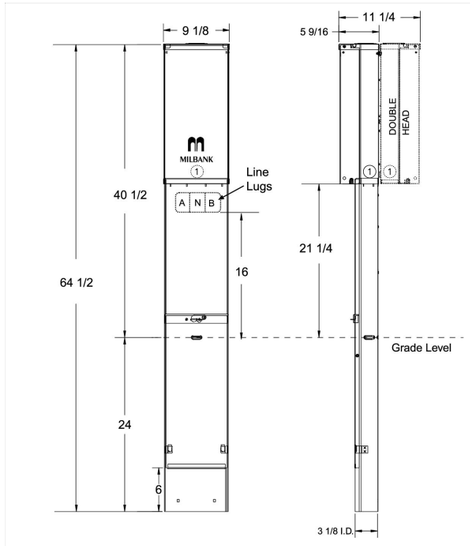

Specifications

- UL listed 125 Amps, 120/240 VAC—1Ø power outlet.
- Short circuit current withstand rating 10,000 RMS symmetrical amperes.
- NEMA 3R welded enclosure for durable outdoor use.
- Enclosure constructed with galvanized 16 gauge steel.
- Direct burial or pad-mounted post constructed with 16 gauge galvanized steel. Two removable front covers for ease of installation. Accepts up to three 2 1/2" conduits.
- ANSI 61 gray polyester powder coat finish.
- Convenient concentric knockout configurations.
- Hub opening with closure plate allows for meter retrofit.
- Wire terminations accept copper or aluminum conductors for loop feed wiring. Line: (2) #6-350 kcmil per phase, Ground: (2) #14-2/0, Neutral: (2) #6-350
- Six circuit plated copper interior accepts standard plug-in type circuit breakers. Rated up to 125 Amps.
- Three position self-grounded receptacle bridge accepts most standard NEMA receptacles with mounting plates.
- Components factory wired with stranded copper wire.
- Lockable hinge cover and deadfront are removable for installation and maintenance. Stay-open hinge cover has safety interlock on deadfront. Deadfront must be removed before hinge cover can be removed.
- LED or fluorescent site light kits available. Factory or field-installable. See accessories page.
- Unit weight — single: 48 lbs., double: 70 lbs.

MILBANK ENERGY AT WORK

Please consult serving utility for their requirements prior to ordering or installing, as specifications and approvals vary by utility, and may require local electrical inspector approval. All installations must be installed by a licensed electrician and must comply with all national and local codes, laws and regulations. Milbank reserves the right to make changes in specifications and features shown without notice or obligation.

Milbank Manufacturing | 4801 Deramus Ave., Kansas City, MO 64120 | 877.483.5314 | milbankworks.com

1 / 57 RV PEDESTAL
NOT TO SCALE

NOTE:

RV PEDESTAL TO BE POWDER COATED, COLOR TO BE DARK BROWN.

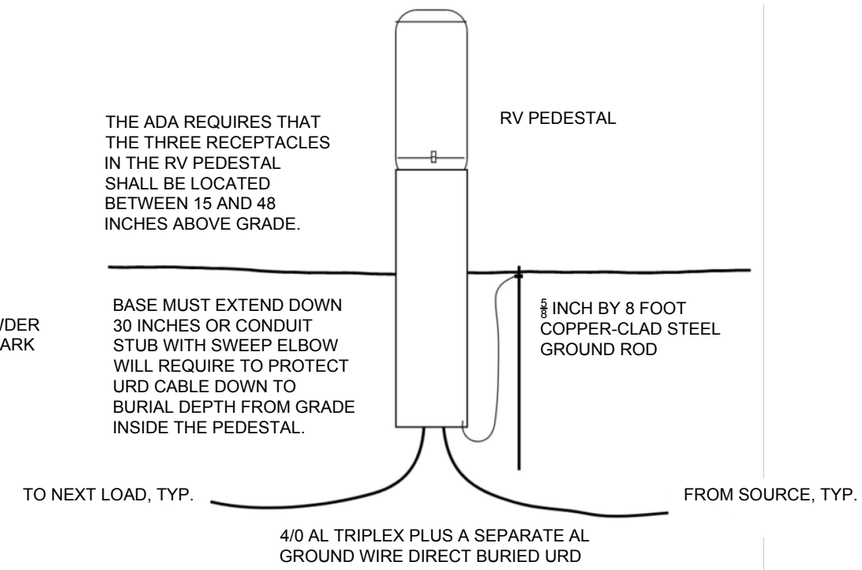

RV PEDESTAL POWER

2 / 57 DOUBLE SITE LIVING AREA DETAIL
NOT TO SCALE

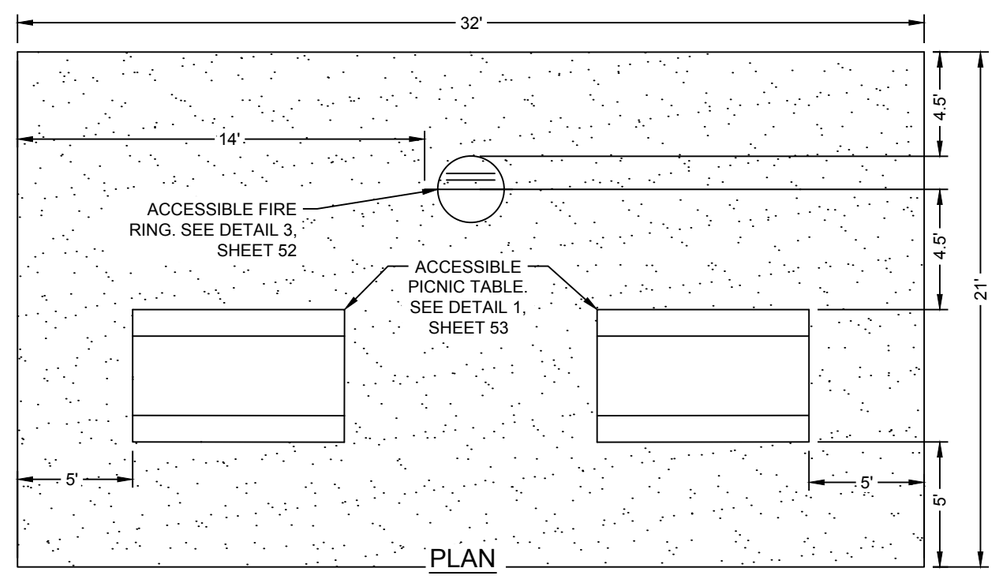

PLAN

NOTES:

1. REFERENCE LIVING AREA SECTION. SEE DETAIL 2, SHEET 52.
2. LOCATIONS TO BE APPROVED BY CO.

3 / 57 DOUBLE SITE LIVING AREA DETAIL
NOT TO SCALE

United States Department of Agriculture
Forest Service

REGION 1
NORTHERN REGION

PROJECT NAME

SAM OWEN CAMPGROUND IMPROVEMENTS

IDAHO PANHANDLE NATIONAL FORESTS

SANDPOINT RANGER DISTRICT

DRAWING TITLE

CIVIL DETAILS

DATE
APRIL 2026

ARCHIVE NO.

DESIGNER
D. LEBSOCK

DRAWN
D. LEBSOCK

CHECKED
P. DRUYVESTEIN

PROJECT NO.
7431

DWG SHEET NO.
57

SHEET 57 OF 72

4/21/26 14:50 DANIEL.LEBSOCK C:\DJA-PW\WORK\DJA-PROD\DMS29121\7431 - DETAILS.DWG:

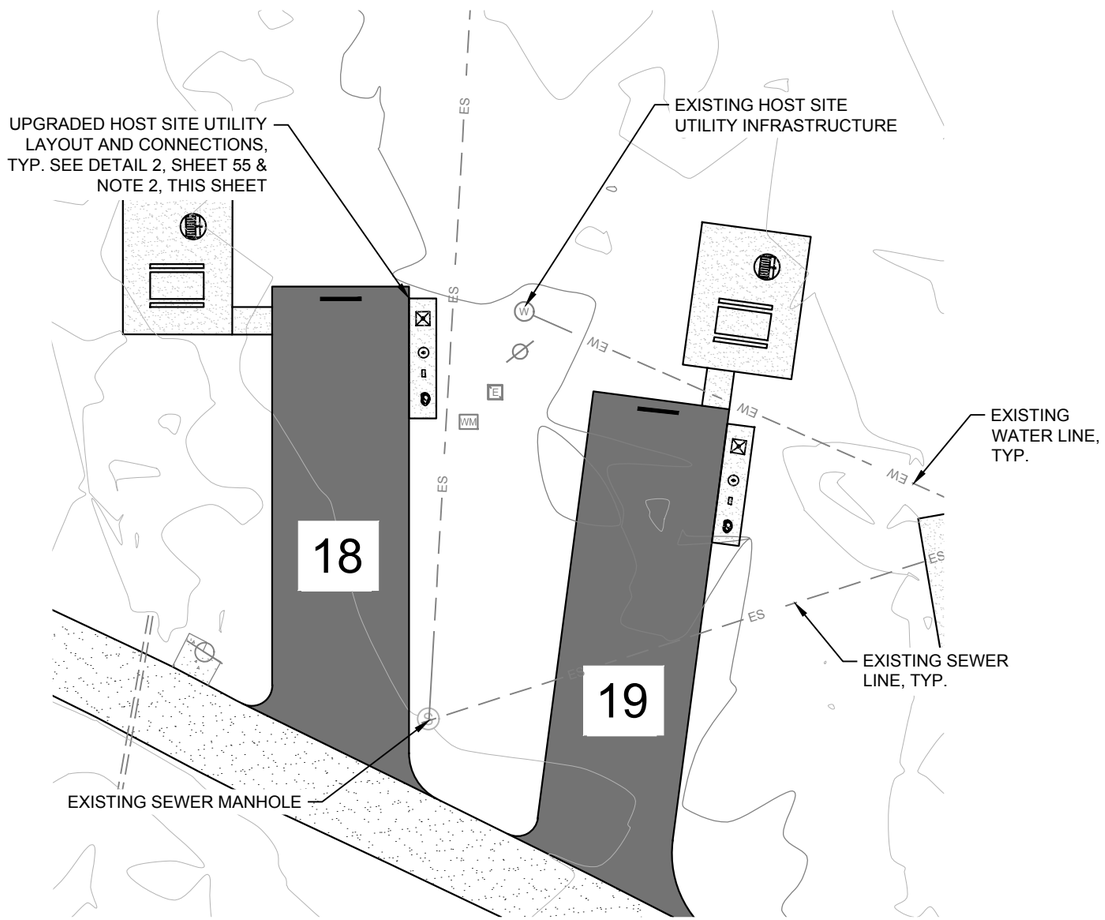

GENERAL NOTES:

1. UNDERGROUND UTILITY LINE LOCATIONS ARE APPROXIMATE. LOCATIONS DEPICTED ON THIS SHEET HAS BEEN ESTABLISHED FROM 1996 UTILITY PDF. CONTRACTOR IS RESPONSIBLE FOR LOCATING AND IDENTIFYING EXISTING UTILITIES DURING HOST SITE UTILITY IMPROVEMENT EFFORTS.

2. ALL UTILITY CONNECTIONS SHALL BE CONSTRUCTED IN ACCORDANCE WITH APPLICABLE LOCAL UTILITY STANDARDS AND SPECIFICATIONS.

3. CONTRACTOR SHALL PROTECT EXISTING UTILITIES DURING HOST SITE CONNECTION IMPROVEMENTS. ANY CONFLICTS ENCOUNTERED IN THE FIELD SHALL BE REPORTED TO THE CO.

4. UTILITY CROSSINGS
   - 4.1. WATER MAIN CROSSING UNDER SEWER MAIN, MIN. SEPARATION IS 18 INCHES.
   - 4.2. WATER MAIN CROSSING ABOVE SEWER MAIN, MIN. SEPARATION IS 12 INCHES.

UTILITY CONNECTION NOTES:

1. HOST SITE UTILITY CONNECTION LAYOUT AND SEQUENCE SHOWN IN DETAIL 2, SHEET 55 MAY BE ADJUSTED IN THE FIELD AS NECESSARY TO ACCOMMODATE EXISTING INFRASTRUCTURE BEING UPGRADED.
   - 1.1. THE MIN. SEPARATIONS BETWEEN EACH UTILITY SHOWN IN DETAIL 2 AND 3, SHEET 55 ARE TO BE MAINTAINED.

2. SEWER SERVICE INSTALLED FROM SEWER MAIN SHALL MAINTAIN A MIN. SLOPE OF 2% (-2%) ROM THE HOST SITE CONNECTION TO THE SEWER MAIN.
   - 2.1. SEWER SERVICE CONNECTION FOR SITE 19 IS TO MADE WITH A TEE INTO THE SEWER MAIN DEPICTED ON THIS SHEET.

3. IF THE HOST SITE HYDRANT IS RELOCATED, THE CONTRACTOR SHALL ENSURE THAT THE ASSOCIATED WATER SHUTOFF VALVE AND VALVE ACCESS REMAIN ADJACENT TO THE HOST SITE AREA, OR RELOCATE THE SHUTOFF VALVE AND ACCESS ACCORDINGLY.
   - 3.1. WATER SERVICE CONNECTION FOR SITE 19 IS TO BE MADE WITH A TEE INTO THE WATER MAIN DEPICTED ON THIS SHEET.
   - 3.2. A SHUT OFF VALVE AND VALVE ACCESS ARE TO BE ADDED TO THE INFRASTRUCTURE IMPROVEMENTS AT SITE 19.

1/58 HOST SITE UTILITY CONNECTION (SITE 18 & SITE 19) - SCHEDULE C
NOT TO SCALE

United States Department of Agriculture
Forest Service

REGION 1
NORTHERN REGION

PROJECT NAME
SAM OWEN CAMPGROUND IMPROVEMENTS

IDAHO PANHANDLE NATIONAL FORESTS

SANDPOINT RANGER DISTRICT

DRAWING TITLE
CIVIL DETAILS - HOST SITE UTILITY CONNECTIONS

DATE
APRIL 2026

ARCHIVE NO.

DESIGNER
D. LEBSOCK

DRAWN
D. LEBSOCK

CHECKED
P. DRUYVESTEIN

PROJECT NO.
7431

DWG SHEET NO.
58

SHEET 58 OF 72

4/21/26 14:50 DANIEL.LEBSOCK C:\DJA-PWWORK\DJA-PROD\DMS29121\7431 - DETAILS.DWG;

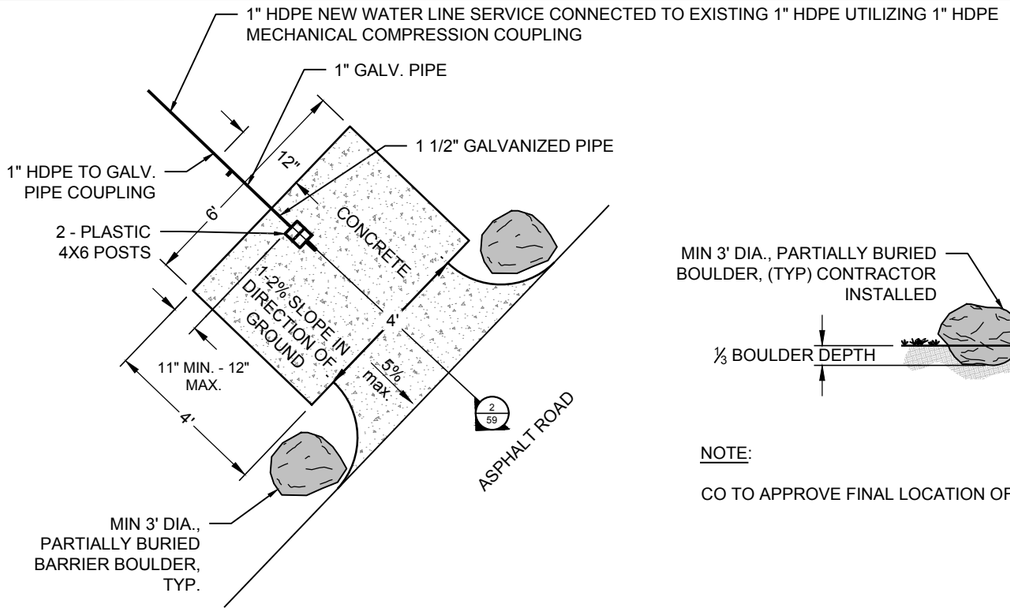

PLAN VIEW

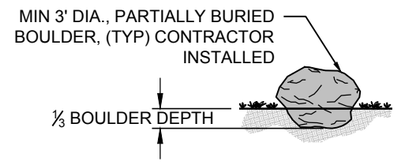

NOTE:

CO TO APPROVE FINAL LOCATION OF BARRIER BOULDER.

BARRIER BOULDER PLACEMENT

1 / 59 POST HYDRANT DETAIL

NOT TO SCALE

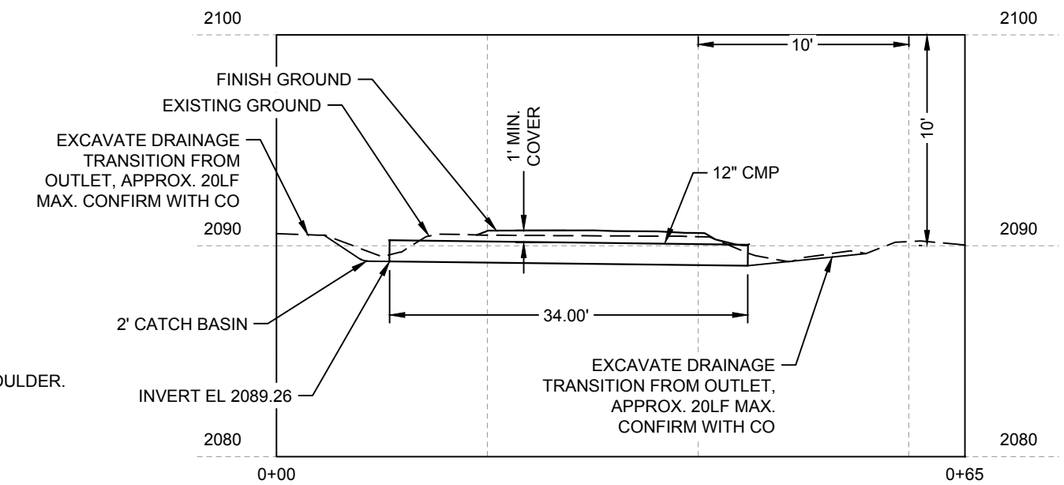

2 / 59 SITE #25 CULVERT REPLACEMENT DETAIL

NOT TO SCALE

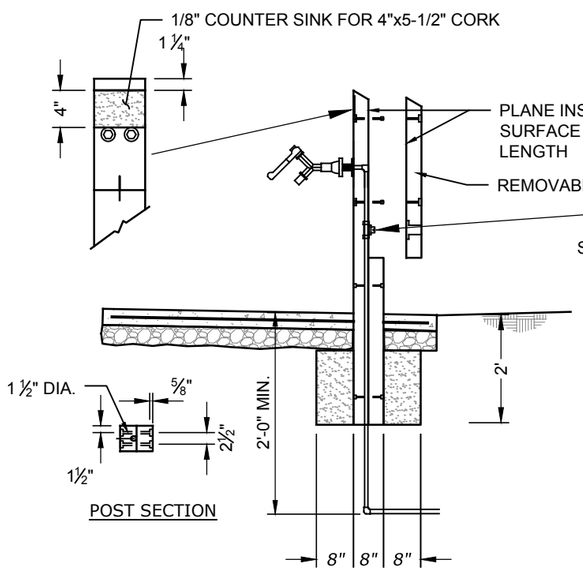

POST SECTION

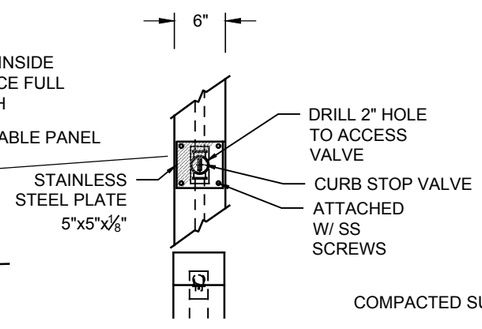

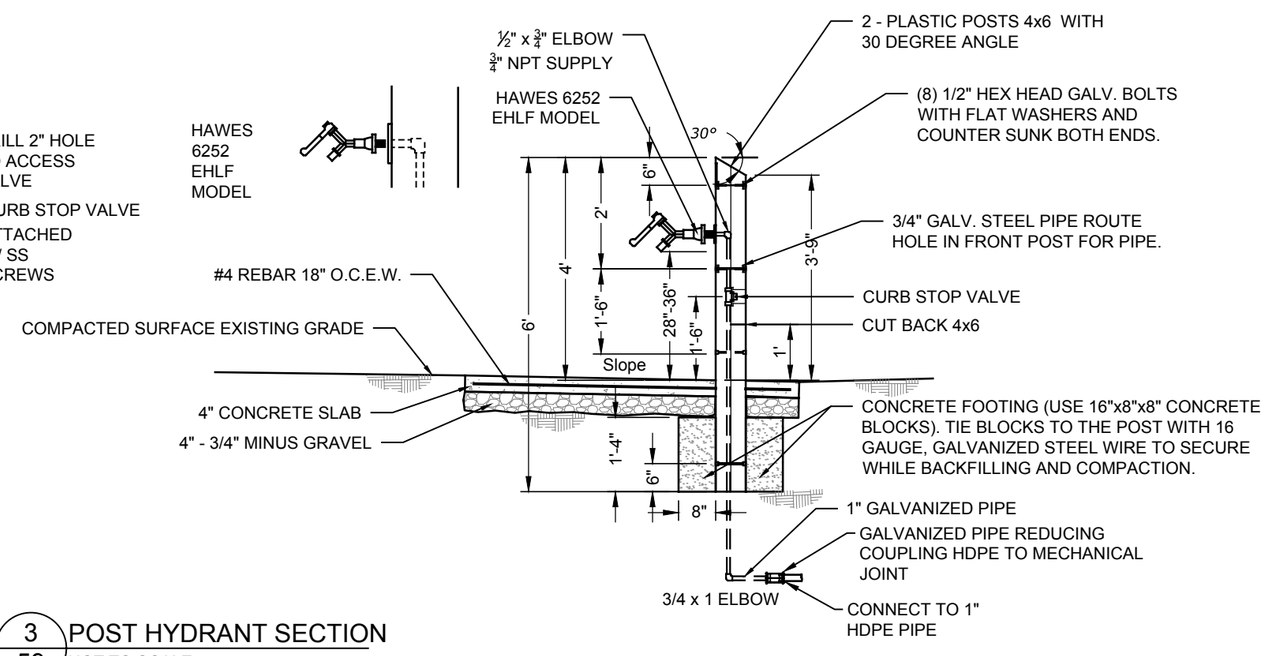

3 / 59 POST HYDRANT SECTION

NOT TO SCALE

United States Department of Agriculture
Forest Service

REGION 1
NORTHERN REGION

PROJECT NAME

SAM OWEN CAMPGROUND IMPROVEMENTS

IDAHO PANHANDLE NATIONAL FORESTS

SANDPOINT RANGER DISTRICT

DRAWING TITLE

CIVIL DETAILS

DATE
APRIL 2026

ARCHIVE NO.

DESIGNER
D. LEBSOCK

DRAWN
D. LEBSOCK

CHECKED
P. DRUYVESTEIN

PROJECT NO.
7431

DWG SHEET NO.
59

SHEET 59 OF 72

4/21/26 14:50 DANIEL.LEBSOCK C:\DJA-PWWORK\DJA-PROD\DMS29121\7431 - DETAILS.DWG;

POST AND RAIL FENCE

	FENCE		POST							RAIL				
TYPICAL ID	TYPE	HEIGHT	TYPE	SIZE	LENGTH (FEET)	SPACING (FEET)	EMBEDMENT DEPTH	PRESERV. TYPE	POST CONNECTION DETAIL	TYPE	SIZE	LENGTH (FEET)	PRESERV. TYPE	COMMENTS
PRF-1	N/A	N/A	N/A	5" DIA.	6'	8' O.C	30"	P 1	F3	N/A	4"	16'	P 2	-

N/A WHEN NOT APPLICABLE

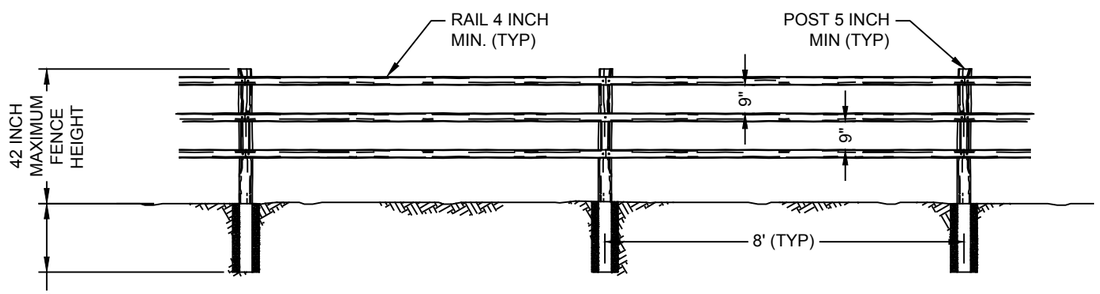

F1 TYPICAL POST AND STRAIGHT RAIL FENCE SECTION

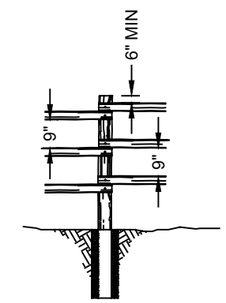

F2 TYPICAL POST AND STACKED RAIL FENCE SECTION

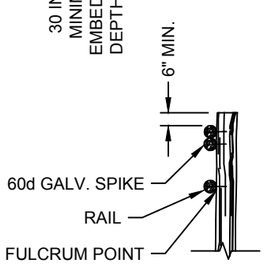

A SPIKE DETAIL

*NOTE: USFS PROJECT PERSONNEL PREFERENCE IS DETAIL "A - SPIKE DETAIL"

NOTES:

1. FENCE AND GATE LOCATIONS AS VERIFIED BY THE CO.
2. PRE-DRILL HOLES FOR FASTENERS TO PREVENT SPLITTING OF BRACING OR POSTS.
3. COMPACT AND BACKFILL POST HOLES IN 6-INCH LIFTS UNTIL NO VISUAL DISPLACEMENT.

PRESERVATIVE TREATMENT - (REFER TO AWPA USE CATEGORY SYSTEM)			
PRESERVATIVE TYPE	TREATMENT TYPE	USE CATEGORY	COMMENTS
P1	WB	UC4A	POST
P2	WB	UC3B	RAIL

TREATMENT TYPE

WB = WATERBORNE

USE CATEGORY

UC3B = ABOVE GROUND - EXPOSED
UC4A = GROUND CONTACT - GENERAL USE

1/60 FENCE DETAIL (SCHEDULE A)
NOT TO SCALE

United States Department of Agriculture
Forest Service

REGION 1
NORTHERN REGION

PROJECT NAME

SAM OWEN CAMPGROUND IMPROVEMENTS

IDAHO PANHANDLE NATIONAL FORESTS

SANDPOINT RANGER DISTRICT

DRAWING TITLE

CIVIL DETAILS - FENCE

DATE
APRIL 2026

ARCHIVE NO.

DESIGNER
D. LEBSOCK

DRAWN
D. LEBSOCK

CHECKED
P. DRUYVESTEIN

PROJECT NO.
7431

DWG SHEET NO.
60

SHEET 60 OF 72

4/21/26 14:50 DANIEL.LEBSOCK C:\DJA-PWWORK\DJA-PROD\DMS29121\7431 - DETAILS.DWG;

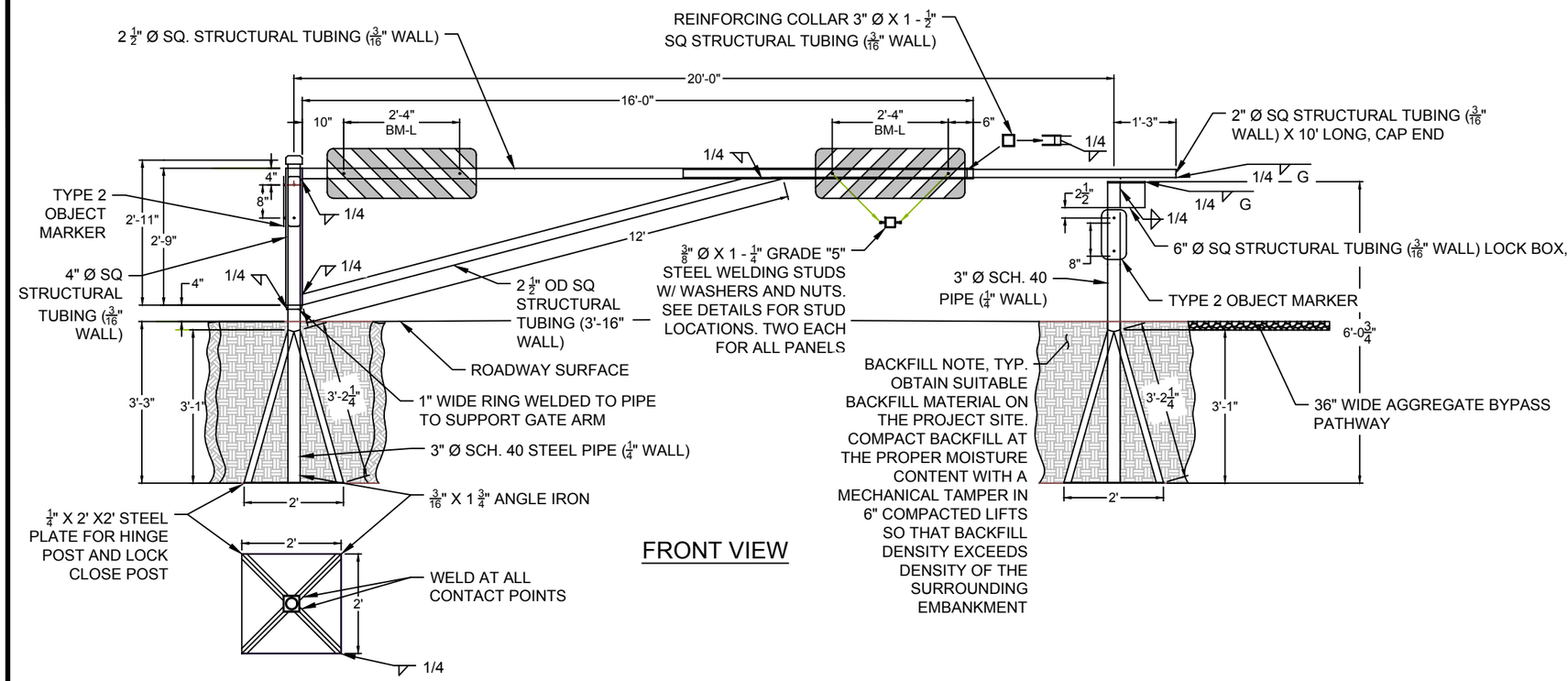

FRONT VIEW

TOP VIEW-POST BASE

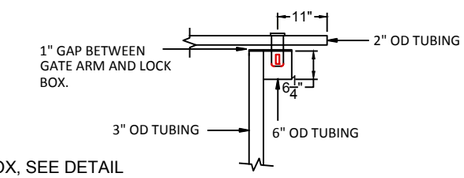

SIDE VIEW

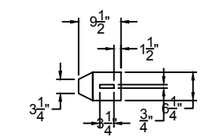

WELD 1/4" STEEL PLATE TO TOP OF LOCK BOX.

TOP VIEW

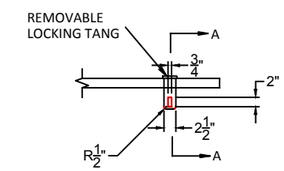

SIDE VIEW

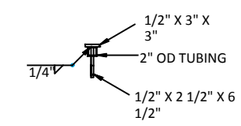

SECTION A-A

NOTES:

1. PIPE SIZES ARE FOR STANDARD WEIGHT STEEL PIPE.
2. USE STRUCTURAL TUBING MEETING ASTM 36 STRUCTURAL STEEL.
3. WELDING REQUIRED IN ASSEMBLING GATES SHALL BE DONE IN ACCORDANCE WITH THE BEST MODERN PRACTICE AND THE APPLICABLE REQUIREMENTS OF AWS D1.1.
4. AFTER FABRICATION, SAND ALL GATE COMPONENTS TO REMOVE ALL RUST, SCALE, AND OILY SUBSTANCE AND PAINT WITH RED PRIMER MEETING REQUIREMENTS OF SHERWIN WILLIAMS KEM BOND HS UNIVERSAL METAL PRIMER BRONZE RD OXIDE OR APPROVED EQUAL. TOPCOAT WITH 2 COATS OF ALKYD COATING AS RECOMMENDED BY MANUFACTURER. COLOR OF TOPCOAT TO BE #20059 ACCORDING TO FEDERAL STANDARD 595B COLOR AND DECK (JULY 1994). SUBMIT COLOR SAMPLE FOR APPROVAL BY CO. PAINT SCRATCHES ON THE GATE WITH MATCHING PAINT AFTER INSTALLATION.
5. OBJECT MARKERS SHALL MEET MUTCD STANDARDS AND ARE FURNISHED AND INSTALLED BY THE CONTRACTOR. INSTALL OBJECT MARKERS CONCURRENT WITH GATE INSTALLATION.
6. TYPE 2 OBJECT MARKERS ARE REFLECTORIZED HIGH INTENSITY YELLOW 6" X 12" PANELS. MARK GATE POST WITH TYPE 2 OBJECT MARKERS, BOTH SIDE OF LOCK CLOSED POST AND ONE SIDE OF LOCK OPEN POST. MOUNT MARKERS ON POSTS TO FACE TRAFFIC WHEN GATE IS LOCKED OPEN AND LOCKED CLOSED. ON HINGE POST, MOUNT ONE MARKER TO FACE TRAFFIC WHEN GATE IS LOCKED OPEN.
7. BARRICADE MARKERS (BM-L AND BM-R) ARE REFLECTORIZED HIGH INTENSITY 12" X 36" WHITE WITH 3" WIDE RED STRIPES AND ARE INSTALLED ON BOTH SIDES OF THE GATE.
8. ORDER LOCKED OPEN POST AFTER POST HEIGHT HAS BEEN APPROVED.
9. INSTALL LOCKING POSTS TO THE NECESSARY ELEVATION TO MAKE HORIZONTAL GATE MEMBERS LEVEL AND GATE CAN BE LOCKED CLOSED.
10. FIELD VERIFY GATE DIMENSIONS BEFORE FABRICATING THE GATE.
11. DISPOSE OF EXCESS UNSUITABLE MATERIAL IN 6" LIFTS IN CLOSE PROXIMITY TO THE GATE.

GATE #	GATE WIDTH
1	14' - 6"
2	15' - 0"
3	15' - 0"
5	15' - 0"
6	16' - 6"
7	15' - 6"

* SEE SITE PLAN FOR GATE NUMBERS AND LOCATION

1 / 61 CAMPGROUND GATE AND LOCK BOX DETAIL
NOT TO SCALE

United States Department of Agriculture
Forest Service

REGION 1
NORTHERN REGION

PROJECT NAME
SAM OWEN CAMPGROUND IMPROVEMENTS

IDAHO PANHANDLE NATIONAL FORESTS

SANDPOINT RANGER DISTRICT

DRAWING TITLE
CIVIL DETAILS - SINGLE GATE

DATE
APRIL 2026

ARCHIVE NO.

DESIGNER
D. LEBSOCK

DRAWN
D. LEBSOCK

CHECKED
P. DRUYVESTEIN

PROJECT NO.
7431

DWG SHEET NO.
61

SHEET 61 OF 72

4/21/26 14:50 DANIEL.LEBSOCK C:\DJA-PWWORK\DJA-PROD\DMS29121\7431 - DETAILS.DWG;

NOTES:

1. SEE DETAIL 1, SHEET 61 FOR GATE INFORMATION, DIMENSIONS, AND REQUIREMENTS.
2. PROVIDE 3-FOOT WIDE BYPASS PATHWAY AROUND GATE IN LOCATION APPROVED BY CO. SEE SHEET 61 FOR INFORMATION.

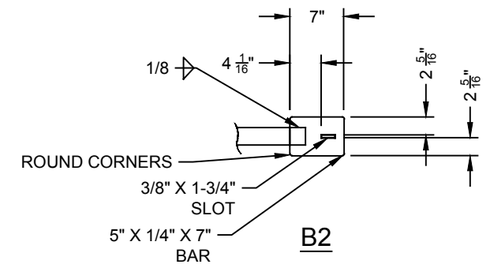

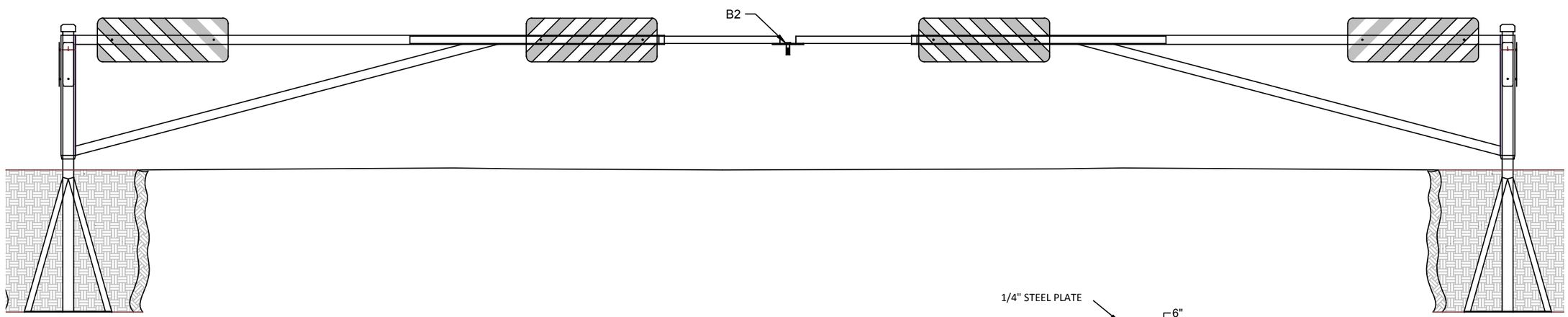

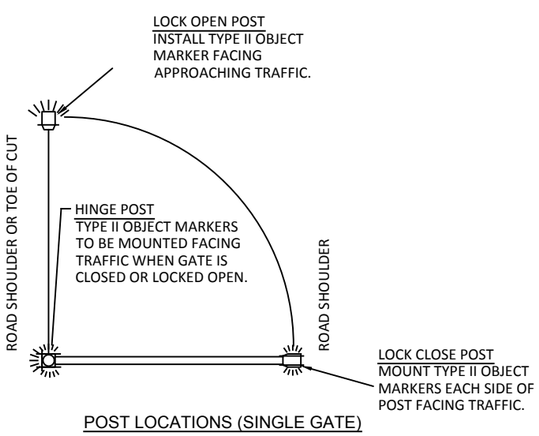

POST LOCATIONS (SINGLE GATE)

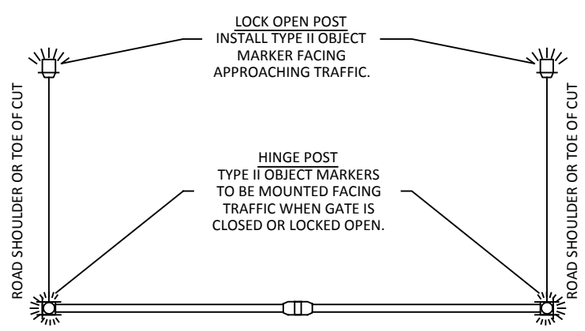

POST LOCATIONS (DOUBLE GATE)

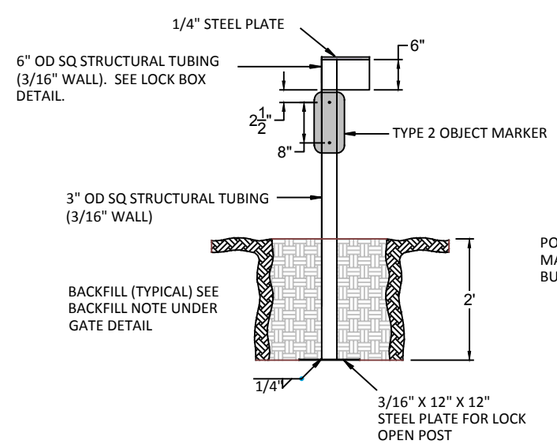

POST HEIGHT FOR LOCK OPEN POST MAY VARY TO FIT FIELD CONDITIONS. BURY POST NO LESS THAN 2'.

LOCK OPEN POST

GATE #	GATE WIDTH
4	13' - 0" (X2)
8	13' - 0" (X2)

* SEE SITE PLAN FOR DOUBLE GATE NUMBERS AND LOCATION

1/62 CAMPGROUND DOUBLE GATE DETAIL

NOT TO SCALE

United States Department of Agriculture
Forest Service

REGION 1
NORTHERN REGION

PROJECT NAME

SAM OWEN CAMPGROUND IMPROVEMENTS

IDAHO PANHANDLE NATIONAL FORESTS

SANDPOINT RANGER DISTRICT

DRAWING TITLE

CIVIL DETAILS - DOUBLE GATE

DATE
APRIL 2026

ARCHIVE NO.

DESIGNER
D. LEBSOCK

DRAWN
D. LEBSOCK

CHECKED
P. DRUYVESTEIN

PROJECT NO.
7431

DWG SHEET NO.
62

SHEET 62 OF 72

4/21/26 14:50 DANIEL.LEBSOCK C:\DJA-PW\WORK\DJA-PROD\DMS29121\7431 - DETAILS.DWG:

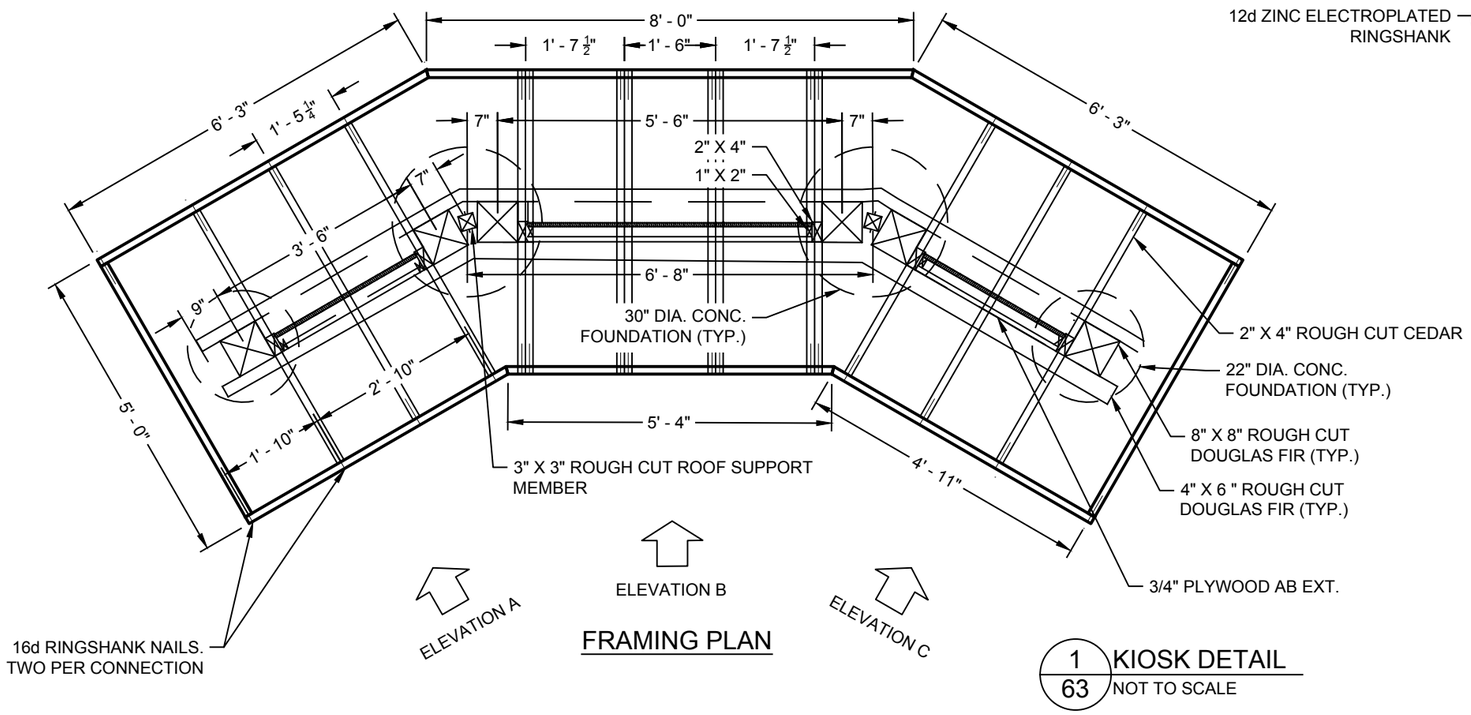

FRAMING PLAN

1 / 63 KIOSK DETAIL
NOT TO SCALE

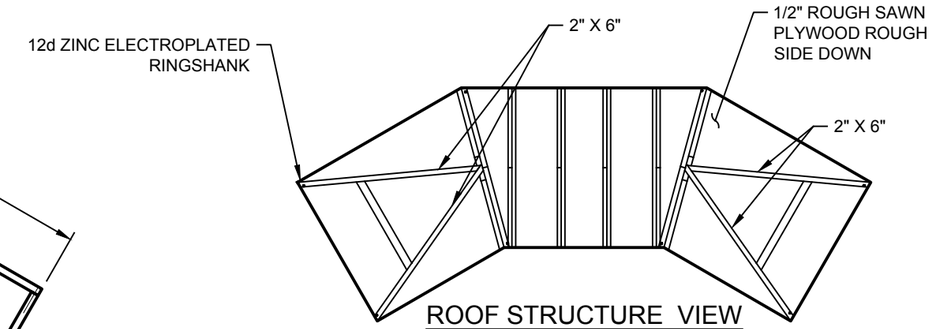

ROOF STRUCTURE VIEW

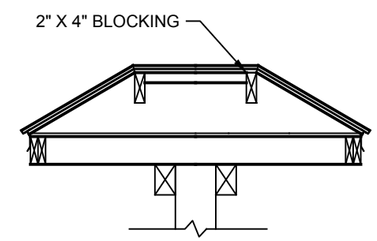

SECTION VIEW

NOTES:

1. PLACE FLASHING ON ALL RIDGES & VALLEYS AS PER MANUFACTURER RECOMMENDATION. FLASHING WILL BE BROWN ANODIZED COATING.
2. SEE SHEET 64 FOR ELEVATION VIEWS AND OTHER DETAILS.

United States Department of Agriculture
Forest Service

REGION 1
NORTHERN REGION

PROJECT NAME
SAM OWEN CAMPGROUND IMPROVEMENTS

IDAHO PANHANDLE NATIONAL FORESTS

SANDPOINT RANGER DISTRICT

DRAWING TITLE
CIVIL DETAILS - KIOSK & FEE TUBE

DATE
APRIL 2026

ARCHIVE NO.

DESIGNER
D. LEBSOCK

DRAWN
D. LEBSOCK

CHECKED
P. DRUYVESTEIN

PROJECT NO.
7431

DWG SHEET NO.
63

SHEET ## OF 72

4/21/26 14:50 DANIEL.LEBSOCK C:\DJA-PWWORK\DJA-PROD\DMS29121\7431 - DETAILS.DWG;

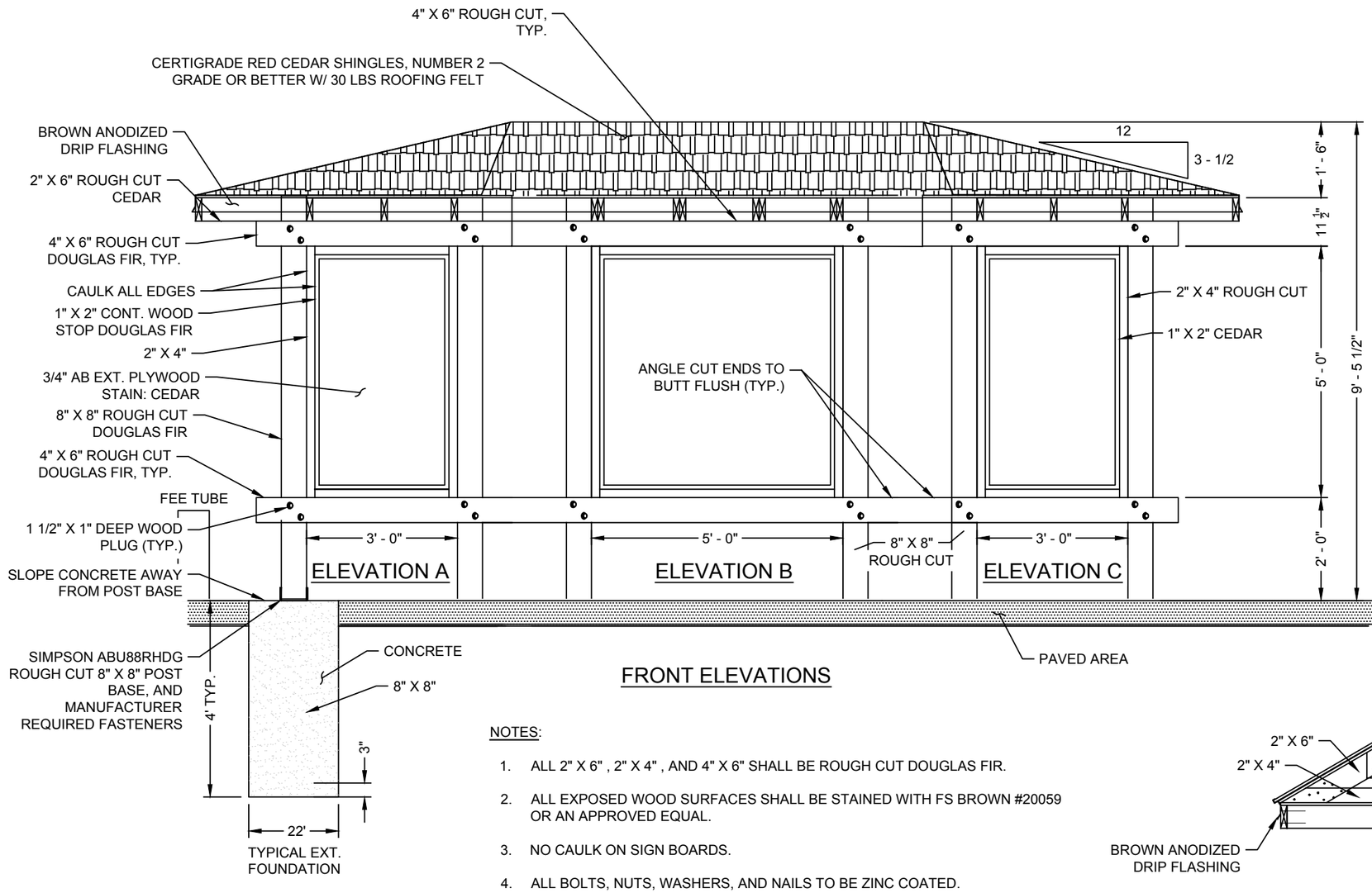

FRONT ELEVATIONS

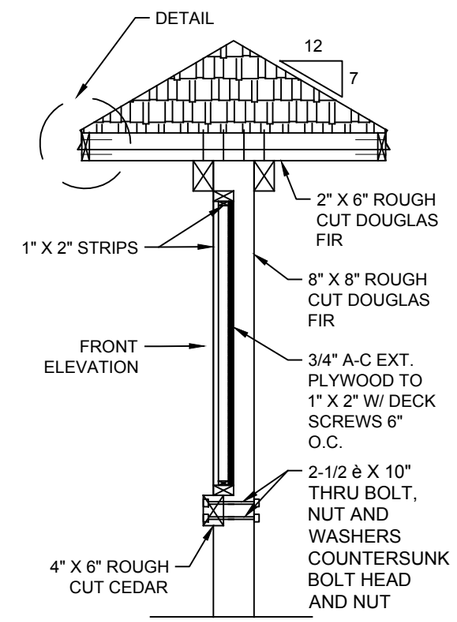

END ELEVATION

NOTES:

1. ALL 2" X 6" , 2" X 4" , AND 4" X 6" SHALL BE ROUGH CUT DOUGLAS FIR.
2. ALL EXPOSED WOOD SURFACES SHALL BE STAINED WITH FS BROWN #20059 OR AN APPROVED EQUAL.
3. NO CAULK ON SIGN BOARDS.
4. ALL BOLTS, NUTS, WASHERS, AND NAILS TO BE ZINC COATED.
5. SIGN PANELS WILL BE SUPPLIED BY OTHERS (TO BE MOUNTED ON PLYWOOD).
6. ALL VISIBLE FASTENERS SHALL BE BRASS COATED DECK SCREWS.
7. INTERIOR FOUNDATIONS (2 EA., 4 POSTS EA.) TO BE 30" DIA. CONC., EXTERIOR FOUNDATIONS (2 EA., 2 POSTS EA.) TO BE 22" DIA. CONC.
8. ANODIZED BROWN DRIP FLASHING TO MATCH ROOF SHINGLES.

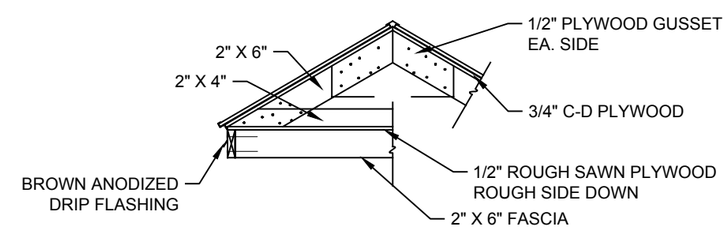

DETAIL

1 / 64 KIOSK DETAIL
NOT TO SCALE

United States Department of Agriculture
Forest Service

REGION 1
NORTHERN REGION

PROJECT NAME

SAM OWEN CAMPGROUND IMPROVEMENTS

IDAHO PANHANDLE NATIONAL FORESTS

SANDPOINT RANGER DISTRICT

DRAWING TITLE

CIVIL DETAILS - KIOSK

DATE
APRIL 2026

ARCHIVE NO.

DESIGNER
D. LEBSOCK

DRAWN
D. LEBSOCK

CHECKED
P. DRUYVESTEIN

PROJECT NO.
7431

DWG SHEET NO.
64

SHEET 64 OF 72

4/21/26 14:50 DANIEL.LEBSOCK C:\DJA-PWWORK\DJA-PROD\DMS29121\7431 - DETAILS.DWG;

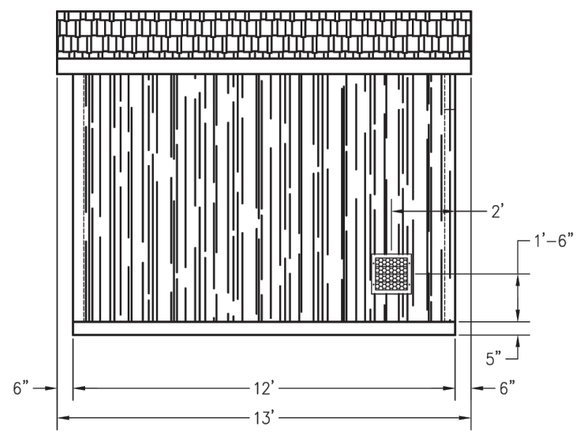

LH SIDE ELEVATION

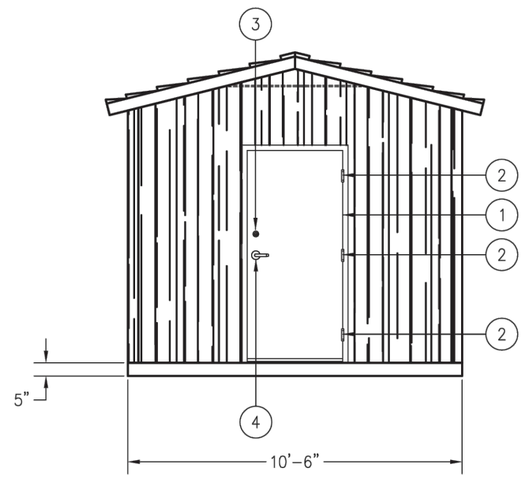

FRONT ELEVATION

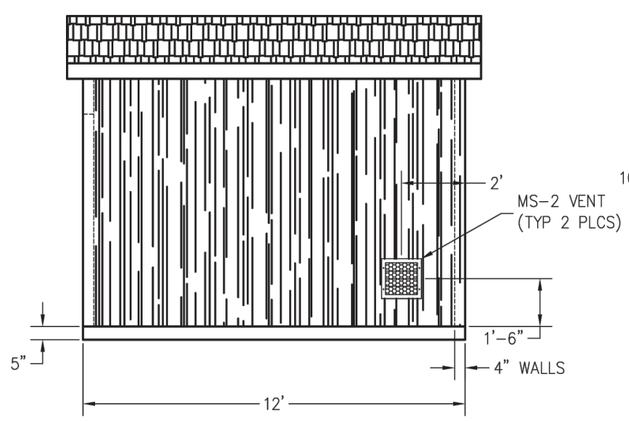

RH SIDE ELEVATION

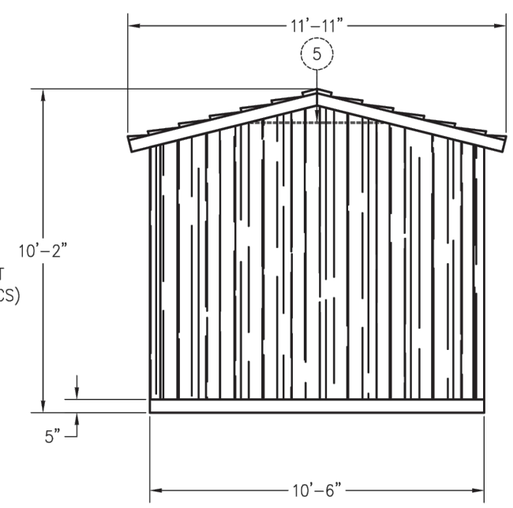

REAR ELEVATION

DESIGN CRITERIA:

GENERAL NOTES APPLY TO ALL PANELS
UNLESS SPECIFICALLY NOTED OTHERWISE

1997 UBC

LOADS:
- WIND: 120 MPH EXP D
- SEISMIC: ZONE 4
- SNOW: 250 PSF ROOF LOAD
- FLOOR LIVE LOAD: 400 PSF

MATERIALS:

CONCRETE: F'ci = 2500 PSI
F'C = 5000 PSI

STEEL:
- REBAR=ASTM A615 GRADE 60
- WELDING NOT ALLOWED
- MIN LAP SPLICE IS 40 DIAMETERS
- ALL MESH IS 4x4xW8xW8
- MIN. MESH LAP IS TWO SQUARES
- MESH IS TO BE CENTERED IN PANEL
- PLATES & BARS=ASTM A36 Fy=36 KSI

PANEL THICKNESS:
- FLOOR = 5"
- WALLS = 4"
- ROOF = 4 1/2"

COLOR: SEE MI

TEXTURE: WALLS – BARNWOOD
ROOF – CEDAR SHAKE

BILL OF MATERIALS

ITEM	QTY	DESCRIPTION
1	1	3068 DOOR ASSEMBLY
		PREP FOR DEAD BOLT
		OPENS OUT
		AUTOMATIC DOOR BTM
		3' THRESHOLD
2	3	SPRING HINGE 4.5 x 4.5
3	1	SCHALAGE DEAD BOLT LOCK
4	1	CLASS ROOM LEVER
5	3	FLAT BAR 1/2" x 5HR x 4'-2"

APPROXIMATE WEIGHT

CASTING TOLERANCES:

OVERALL LENGTH OR WIDTH
- 10 FT OR UNDER = ± 1/8"
- 10 TO 20 FT = +1/8", -3/16"
- 20 TO 40 FT = ±1/4"

TOTAL THICKNESS = -1/8, +1/4

VARIATION FROM SQUARE = ±1/8 PER 6 FT OF DIAGONAL

LOCAL SMOOTHNESS = 1/4" IN 10 FT

SWEEP = ±1/4"

POSITION OF TENDONS = ±1/4"

POSITION OF BLOCKOUTS = ±1/4"

SIZE OF BLOCKOUTS = ±1/4"

POSITION OF EMBEDS = ±1/4"

TIPPING AND FLUSHNESS OF PLATES = +0, -1/4

BOWING = LENGTH/360

END SQUARENESS = ±1/8"

CXT® Precast Products

PROJECT TITLE
10.5' x 12' SCHWEITZER
CXT STANDARD BUILDING

NOTICE

The information contained herein is proprietary and the exclusive property of CXT Incorporated. The information may only be used by the original recipient for the purpose intended. Reproduction or distribution of this information is strictly prohibited without the prior written consent of CXT Incorporated. By allowing use of this information, CXT Incorporated grants no warranty, express or implied, including a warranty of merchantability or of fitness for a particular purpose.

CXT Incorporated

REV.	DESCRIPTION	APPROVAL	DATE

SCALE	1/4"=1'-0"	DATE	03-28-05
DRAWN		FILE NO.	PD-SW10.51201
CHECKED		PLOT	48

BUILDING ELEVATIONS

DWG NO.	SHEET	REV.
10.512-01		

1/65 10.5' X 12' SCHWEITZER SHED DETAIL (SCHEDULE A)
NOT TO SCALE

United States Department of Agriculture
Forest Service

REGION 1
NORTHERN REGION

PROJECT NAME

SAM OWEN CAMPGROUND IMPROVEMENTS

IDAHO PANHANDLE NATIONAL FORESTS

SANDPOINT RANGER DISTRICT

DRAWING TITLE

CIVIL DETAILS - SHED

DATE
APRIL 2026

ARCHIVE NO.

DESIGNER
D. LEBSOCK

DRAWN
D. LEBSOCK

CHECKED
P. DRUYVESTEIN

PROJECT NO.
7431

DWG SHEET NO.
65

SHEET 65 OF 72

4/21/26 14:50 DANIEL.LEBSOCK C:\DJA-PWWORK\DJA-PROD\DMS29121\7431 - DETAILS.DWG;

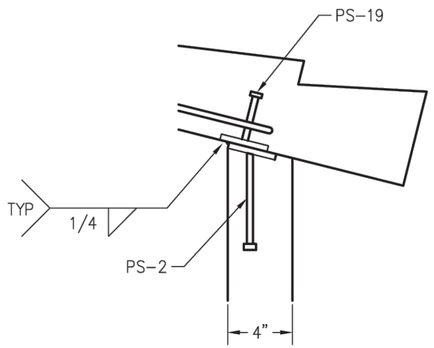

WALL TO ROOF CONNECTION

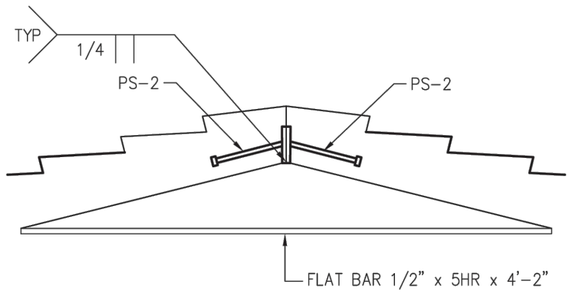

RIDGE CONNECTION

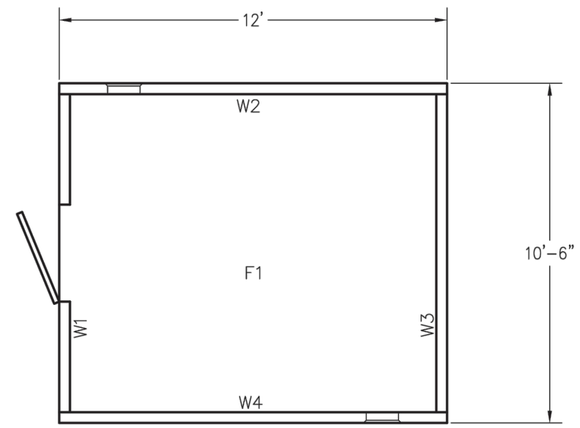

FLOOR PLAN

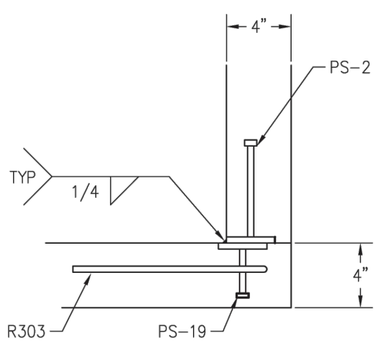

WALL TO WALL CONNECTION

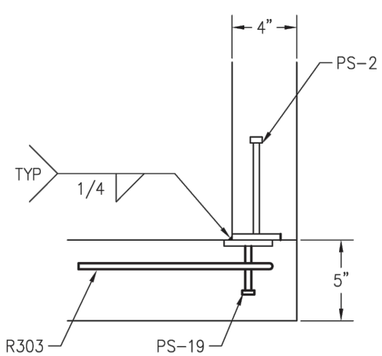

WALL TO FLOOR CONNECTION

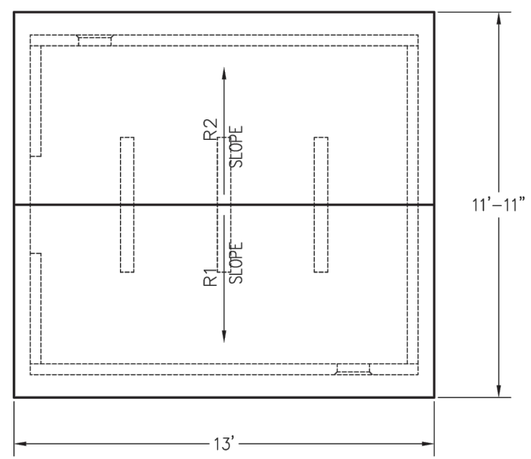

ROOF PLAN

CXT® Precast Products

PROJECT TITLE
10.5' x 12' SCHWEITZER
CXT STANDARD BUILDING

NOTICE

The information contained herein is proprietary and the exclusive property of CXT Incorporated. The information may only be used by the original recipient for the purpose intended. Reproduction or distribution of this information is strictly prohibited without the prior written consent of CXT Incorporated. By allowing use of this information, CXT Incorporated grants no warranty, express or implied, including a warranty of merchantability or of fitness for a particular purpose.

CXT Incorporated

REV.	DESCRIPTION	APPROVAL	DATE

SCALE	1/4"=1'-0"	DATE	03-28-05
DRAWN		FILE NO.	PD-SW10.51202
CHECKED		PLOT	48

PLAN VIEW

DWG NO.	SHEET	REV.
10.512-02		

1/66 10.5' X 12' SCHWEITZER SHED DETAIL (SCHEDULE A)
NOT TO SCALE

USDA United States Department of Agriculture Forest Service

REGION 1
NORTHERN REGION

PROJECT NAME
SAM OWEN CAMPGROUND IMPROVEMENTS

IDAHO PANHANDLE NATIONAL FORESTS

SANDPOINT RANGER DISTRICT

DRAWING TITLE
CIVIL DETAILS - SHED

DATE
APRIL 2026

ARCHIVE NO.

DESIGNER
D. LEBSOCK

DRAWN
D. LEBSOCK

CHECKED
P. DRUYVESTEIN

PROJECT NO.
7431

DWG SHEET NO.
66

SHEET 66 OF 72

4/21/26 14:50 DANIEL.LEBSOCK C:\DJA-PWWORK\DJA-PROD\DMS29121\7431 - DETAILS.DWG;

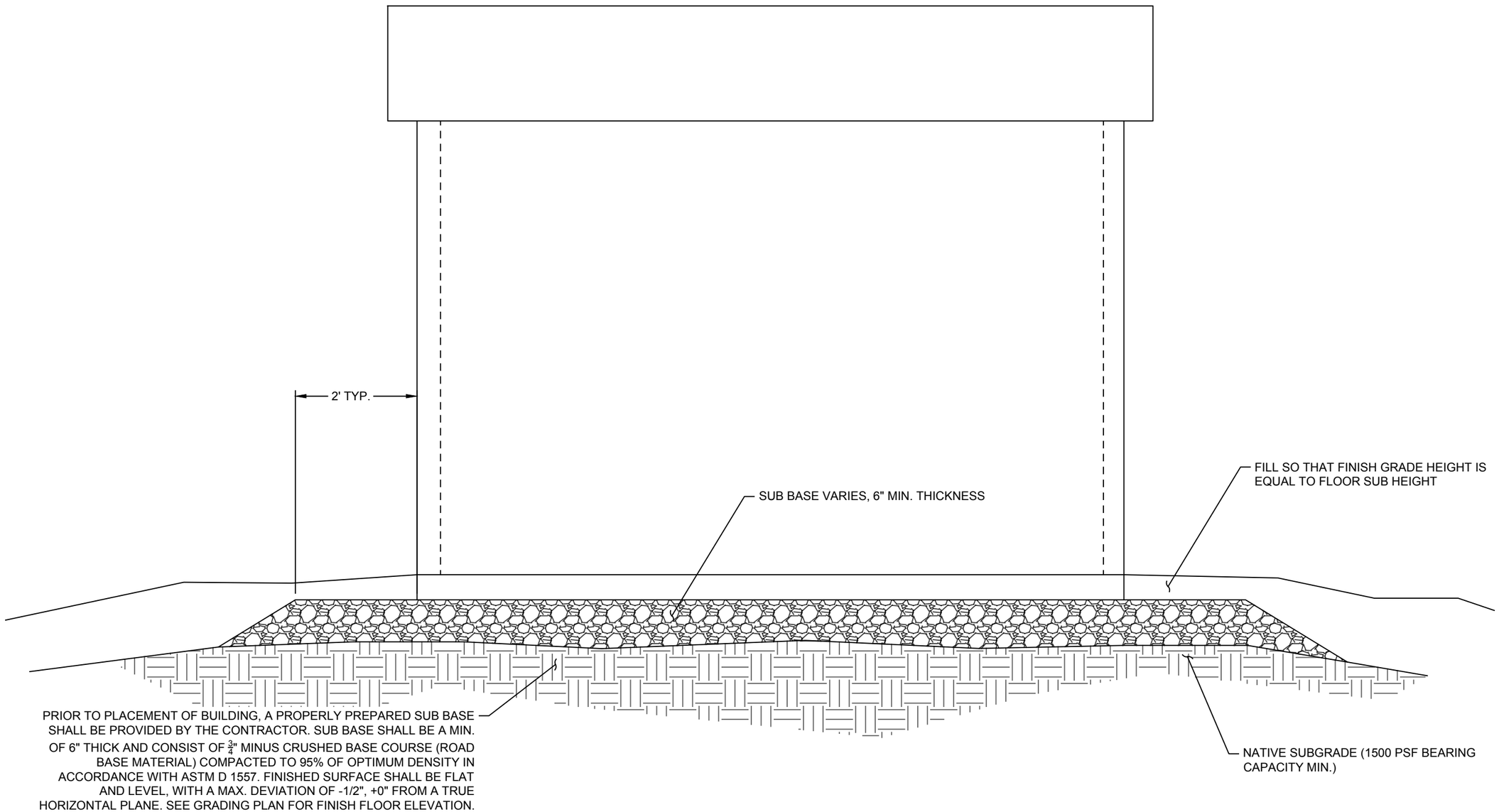

1/67 10.5' X 12' SCHWEITZER SHED FOUNDATION (SCHEDULE A)

NOT TO SCALE

United States Department of Agriculture
Forest Service

REGION 1
NORTHERN REGION

PROJECT NAME

SAM OWEN CAMPGROUND IMPROVEMENTS

IDAHO PANHANDLE NATIONAL FORESTS

SANDPOINT RANGER DISTRICT

DRAWING TITLE

CIVIL DETAILS - SHED PAD

DATE
APRIL 2026

ARCHIVE NO.

DESIGNER
D. LEBSOCK

DRAWN
D. LEBSOCK

CHECKED
P. DRUYVESTEIN

PROJECT NO.
7431

DWG SHEET NO.
67

SHEET 67 OF 72

4/21/26 14:50 DANIEL.LEBSOCK C:\DJA-PW\WORK\DJA-PROD\DMS29121\7431 - DETAILS.DWG;

Selway 100 Series 24 Cubic Foot Bear Proof Food Storage Locker Product Information & Installation Instructions

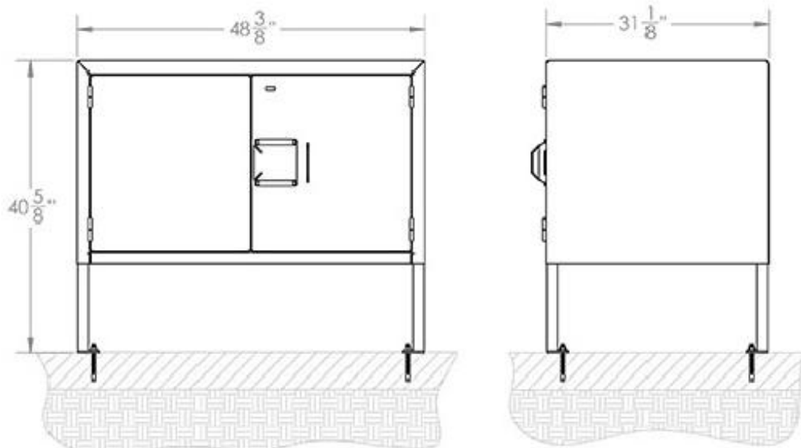

This 24 cubic foot storage locker is a quality metal enclosure, is ADA compliant and designed for safe and convenient food storage in campgrounds, picnic areas, and trailheads. It is designed to have enough room to fit a large cooler and still leave plenty of space to spare for dry goods. The doors are easy to operate and open wide for easy access. They may be shut by just swinging them closed. The door hinges are heavy duty stainless steel for corrosion resistance and longevity. The bear-proof storage locker comes powder coated for superior corrosion resistance and protection.

The Selway Series Food Storage Lockers are Certified Bear Resistant by the Interagency Grizzly Bear Committee.

An internal child safety latch override is standard. An optional locking hasp is available.

Standard Colors: Black (BL), Blue (B), Brown (BR), Classic Grey (CG), Copper Vein (CV), Sierra Tan (ST), Medium Bronze (MB), Statuary Bronze (SB).

All Bear Guardian products are made in America from no less than 70% recycled steel and are backed by a one year manufacturer warranty.

Installation Instructions

Four each 3/8" x 4" long wedge anchors, 3/8" flat washers, and 3/8" hex nuts are required for mounting.

1. Lay out the location of the anchor bolts in the desired location according to the dimensions shown.
2. Using a 3/8" diameter carbide drill bit, drill the four holes to any depth exceeding the desired embedment. A minimum depth of 3" is recommended.
3. Clean drill fines from hole.
4. Assemble washer and nut, leaving nut flush with end of the anchor to protect threads. Drive each anchor into a hole. Once the recommended depth of 3" is achieved, hand tighen the nut until the washer is flush to surface of the concrete.
5. Expand the anchor by tightening the nut 3-5 turns past the hand tight position, or to the specified torque requirement.
6. Remove the nuts and washers from the anchors.
7. Place the storage locker over the anchors and reinstall the washers and nuts.

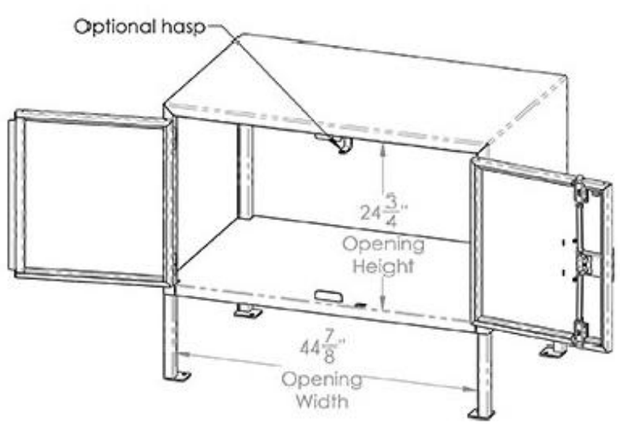

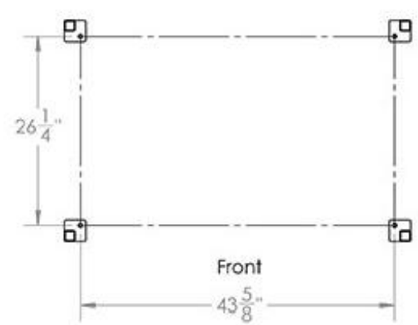

Anchor Bolt Layout

BEAR GUARDIAN

www.bearguardian.com

PROUDLY MADE IN THE USA

CERTIFIED BEAR RESISTANT Interagency GRIZZLY BEAR Committee

1/68 BEAR GUARDIAN FOOD STORAGE (S124) (SCHEDULE B)
NOT TO SCALE

United States Department of Agriculture
Forest Service

REGION 1
NORTHERN REGION

PROJECT NAME
SAM OWEN CAMPGROUND IMPROVEMENTS

IDAHO PANHANDLE NATIONAL FORESTS

SANDPOINT RANGER DISTRICT

DRAWING TITLE
CIVIL DETAILS - BEAR BOX

DATE
APRIL 2026

ARCHIVE NO.

DESIGNER
D. LEBSOCK

DRAWN
D. LEBSOCK

CHECKED
P. DRUYVESTEIN

PROJECT NO.
7431

DWG SHEET NO.
68

SHEET 68 OF 72

4/21/26 14:50 DANIEL.LEBSOCK C:\DJA-PWWORK\DJA-PRODIDMS29121\7431 - DETAILS.DWG;

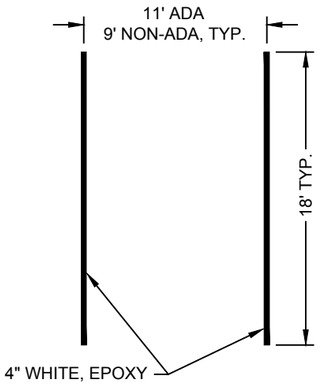

STANDARD 90° ADA PARKING STALL

NOTE:

SEE SITE PLAN FOR PARKING STALL DIMENSIONS AND LAYOUT.

ALL SIGNING AND STRIPING SHALL CONFORM TO THE LATEST EDITION OF THE MUTCD.

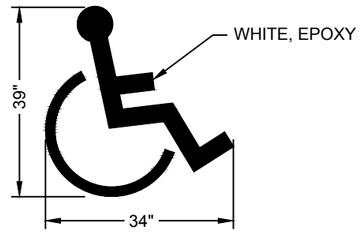

ADA PARKING SYMBOL

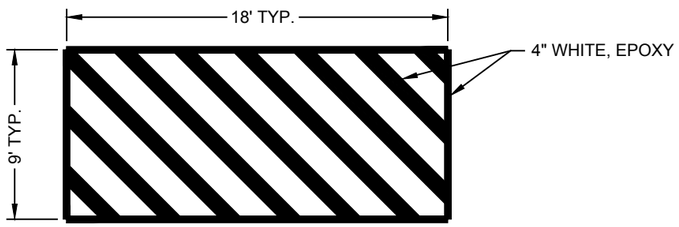

ADA PARKING STRIPING

1/69 ADA PARKING STALL / ASPHALT STRIPING

NOT TO SCALE

USDA FOREST SERVICE

United States Department of Agriculture
Forest Service

REGION 1
NORTHERN REGION

PROJECT NAME

SAM OWEN CAMPGROUND IMPROVEMENTS

IDAHO PANHANDLE NATIONAL FORESTS

SANDPOINT RANGER DISTRICT

DRAWING TITLE

CIVIL DETAILS - PAVEMENT MARKINGS

DATE
APRIL 2026

ARCHIVE NO.

DESIGNER
D. LEBSOCK

DRAWN
D. LEBSOCK

CHECKED
P. DRUYVESTEIN

PROJECT NO.
7431

DWG SHEET NO.
69

SHEET 69 OF 72

4/21/26 14:50 DANIEL.LEBSOCK C:\DJA-PW\WORK\DJA-PROD\DMS29121\7431 - DETAILS.DWG;

PLAN NOTES:

1. EXISTING POWER POLE, METER, PUMP HOUSE, AND ELECTRICAL PANEL TO REMAIN.
2. NEW RV ELECTRICAL PEDESTAL FOR SITE 50.
3. EXISTING UTILITY TRANSFORMER, METER, AND SERVICE ENTRANCE PANEL TO REMAIN.
4. NEW RV ELECTRICAL PEDESTAL FOR SITE 19.
5. NEW RV ELECTRICAL PEDESTAL FOR SITE 18.
6. NEW RV ELECTRICAL PEDESTAL FOR SITE 5.
7. NEW RV ELECTRICAL PEDESTAL FOR SITE 69.
8. ESTIMATED ROUTING OF EXISTING UNDERGROUND SECONDARY ELECTRICAL LINE CONNECTING THE EXISTING TRANSFORMER WITH EXISTING RV PEDESTALS AT SITES 19, 18, 5, AND 69. THIS ESTIMATED ROUTING IS BASED SOLELY ON LIMITED SITE INVESTIGATION AND SHALL BE FIELD VERIFIED BY THE CONTRACTOR.
9. IT IS THE INTENT OF THIS PROJECT TO REUSE THE EXISTING UNDERGROUND SECONDARY ELECTRICAL LINES TO THE GREATEST EXTENT POSSIBLE. CONTRACTOR SHALL PERFORM A FIELD TEST OF THE EXISTING UNDERGROUND SECONDARY ELECTRICAL LINES TO CHECK FOR CONTINUITY AND VOLTAGE DROP WITH RESPECT TO THE EXISTING LINE SIZES. IN ANY INSTANCE WHERE CALCULATED VOLTAGE DROP EXCEEDS CODE ALLOWANCE, CONTRACTOR SHALL INFORM THE CO.
10. CONTRACTOR SHALL ADD NEW DEDICATED 15 AMP CIRCUIT BREAKER IN EXISTING ELECTRICAL PANEL IN PUMPHOUSE TO POWER NEW HOLDING TANK ALARM SYSTEM AT SITE 50. CONTRACTOR SHALL PROVIDE ALL ELECTRICAL DEVICES AND LABOR TO CONNECT TO THE NEW ALARM SYSTEM. MOUNT ALARM ON 4X4 POST IN LOCATION APPROVED BY CO.

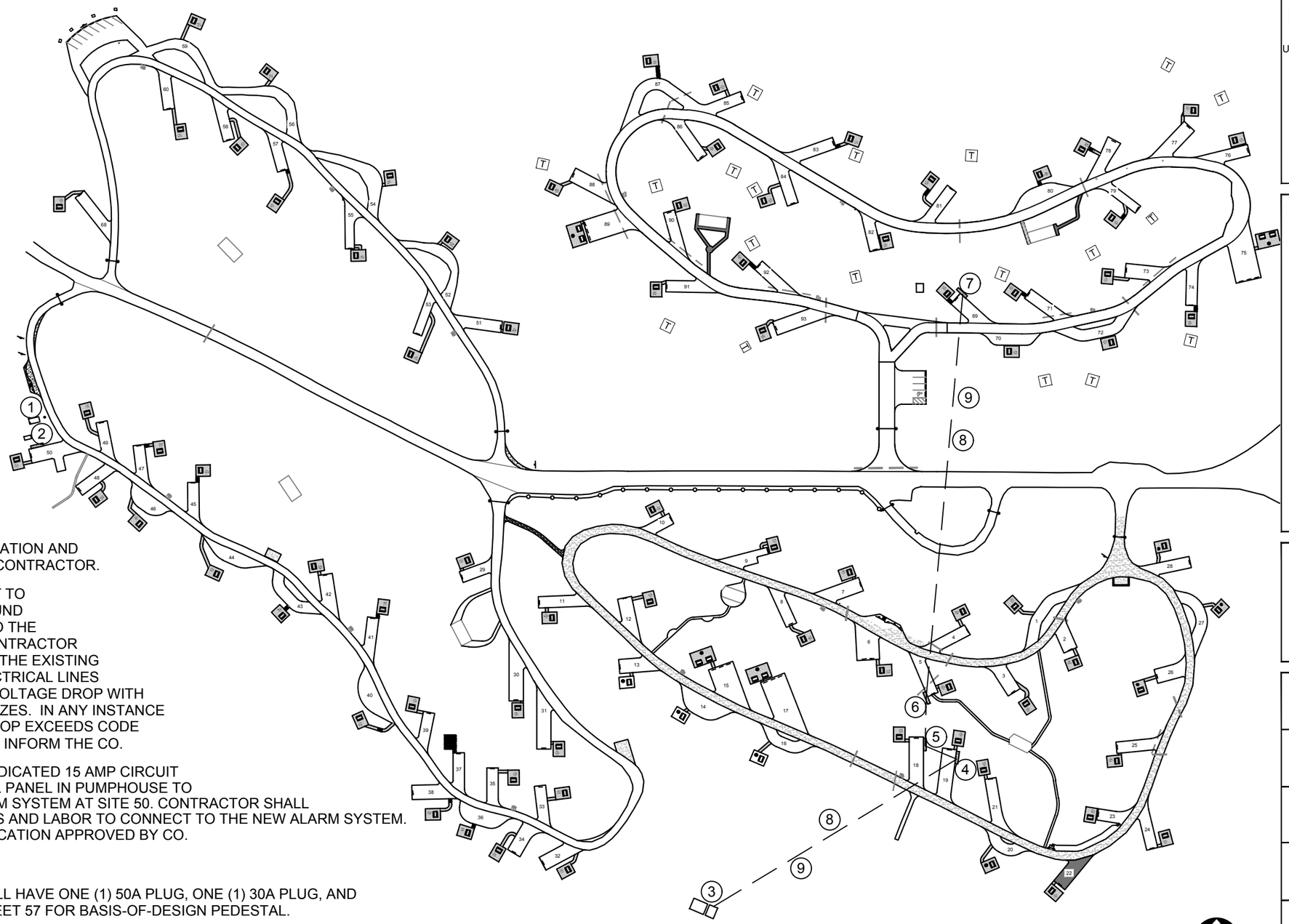

GENERAL NOTES:

1. NEW RV ELECTRICAL PEDESTAL SHALL HAVE ONE (1) 50A PLUG, ONE (1) 30A PLUG, AND TWO (2) 20A PLUGS. SEE DETAIL, SHEET 57 FOR BASIS-OF-DESIGN PEDESTAL.
2. ALL UTILITY CONNECTIONS SHALL BE CONSTRUCTED IN ACCORDANCE WITH APPLICABLE LOCAL UTILITY STANDARDS AND SPECIFICATIONS.
3. CONTRACTOR SHALL PROTECT EXISTING UTILITIES DURING HOST SITE CONNECTION IMPROVEMENTS. ANY CONFLICTS ENCOUNTERED IN THE FIELD SHALL BE REPORTED TO THE CO.

USDA FOREST SERVICE

United States Department of Agriculture
Forest Service

REGION 1
NORTHERN REGION

PROJECT NAME

SAM OWEN CAMPGROUND IMPROVEMENTS

IDAHO PANHANDLE NATIONAL FORESTS

SANDPOINT RANGER DISTRICT

DRAWING TITLE

ELECTRICAL - 1

DATE APRIL 2026	
ARCHIVE NO.	
DESIGNER D. LEBSOCK	DWG SHEET NO. 70
DRAWN D. LEBSOCK	
CHECKED P. DRUYVESTEIN	SHEET 70 OF 72
PROJECT NO. 7431	

4/20/26 11:52 DANIEL.LEBSOCK C:\DJA-PW\WORK\DJA-PROD\DMS29121\7431 - ELECTRICAL1.DWG;

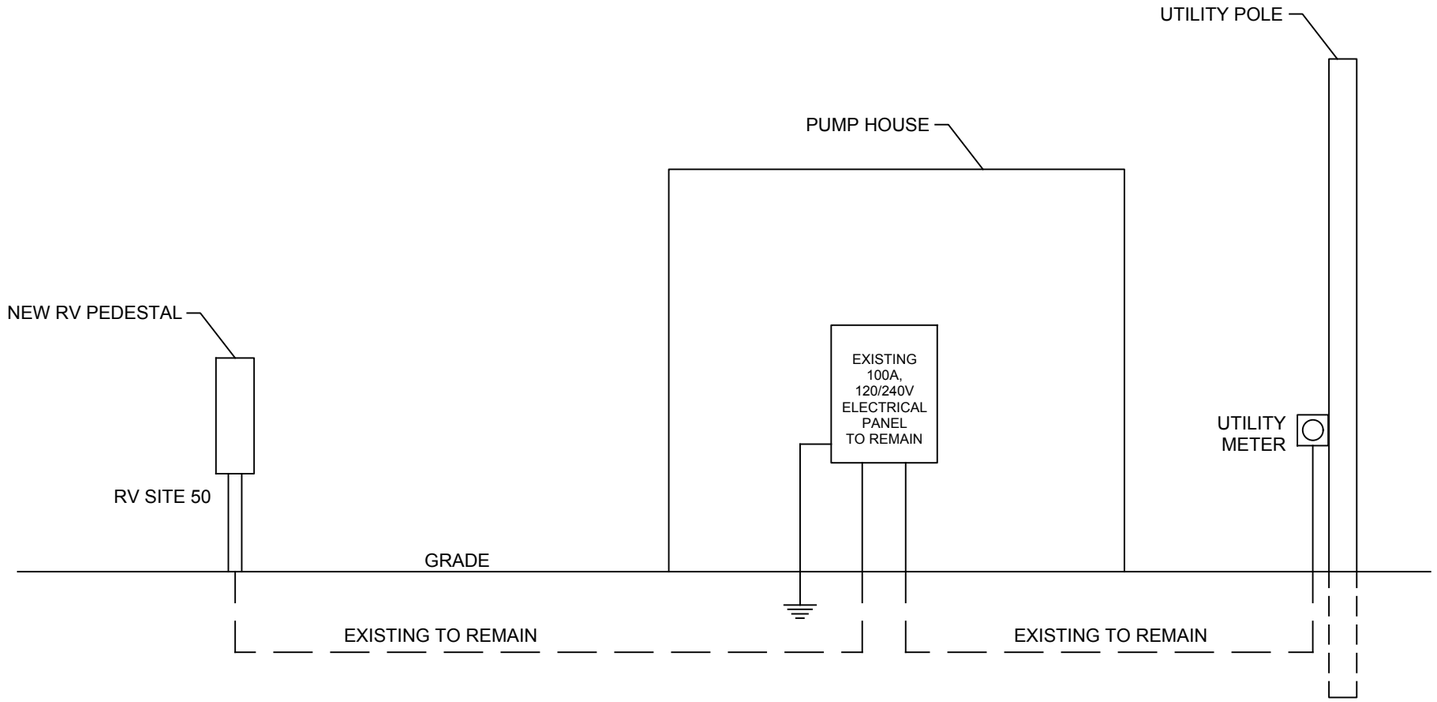

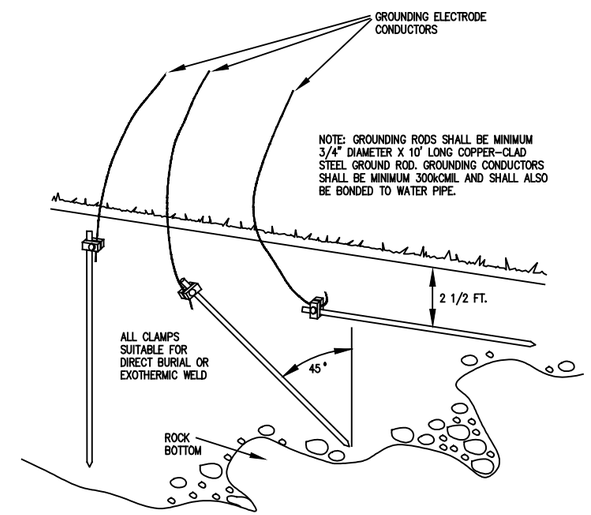

TYPICAL INSTALLATION DETAIL FOR GROUNDING ELECTRODES

SCALE: NOT TO SCALE

RISER NOTES

1. THIS RISER DIAGRAM IS BASED ON LIMITED FIELD DATA. CONTRACTOR SHALL FIELD VERIFY SIZE AND TYPE OF EXISTING ELECTRICAL SERVICE AND SHALL COORDINATE ANY REQUIRED CHANGES WITH THE GOVERNMENT PRIOR TO ORDERING AND/OR INSTALLING NEW DEVICES.

United States Department of Agriculture
Forest Service

REGION 1
NORTHERN REGION

PROJECT NAME

SAM OWEN CAMPGROUND IMPROVEMENTS

IDAHO PANHANDLE NATIONAL FORESTS

SANDPOINT RANGER DISTRICT

DRAWING TITLE

ELECTRICAL - 2

DATE
APRIL 2026

ARCHIVE NO.

DESIGNER
D. LEBSOCK

DRAWN
D. LEBSOCK

CHECKED
P. DRUYVESTEIN

PROJECT NO.
7431

DWG SHEET NO.
71

SHEET 71 OF 72

4/21/26 15:09 DANIEL.LEBSOCK C:\DJA-PWWORK\DJA-PROD\DMS29121\7431 - ELECTRICAL1.DWG;

ELECTRICAL NOTES

1. SCOPE OF WORK:

   A. CONTRACTOR SHALL VISIT SITE PRIOR TO BIDDING. BIDS SHALL SERVE AS EVIDENCE OF KNOWLEDGE OF EXISTING CONDITIONS. FIELD VERIFY ALL ELECTRICAL EQUIPMENT AND SITE CONDITIONS INCLUDING, BUT NOT LIMITED TO, ELECTRICAL SERVICE SIZE AND CAPACITY AND ELECTRICAL EQUIPMENT CHARACTERISTICS (WIRE SIZES AND LOADS).

   B. FURNISH ALL LABOR, MATERIALS, EQUIPMENT AND TOOLS TO PERFORM ELECTRICAL WORK SHOWN, NOTED OR SCHEDULED FOR A COMPLETE AND FINISHED INSTALLATION.

   C. MATERIALS, PRODUCTS AND EQUIPMENT, INCLUDING ALL COMPONENTS THEREOF, SHALL BE NEW AND SUCH AS APPEAR ON THE UNDERWRITERS LABORATORIES LIST OF APPROVED ITEMS AND SHALL BE SIZED IN CONFORMITY WITH REQUIREMENTS OF THE NATIONAL ELECTRICAL CODE AND OTHER APPLICABLE CODES, WHICHEVER ARE MORE STRINGENT.

   D. ALL WORK TO BE IN ACCORDANCE WITH NATIONAL ELECTRIC CODE (LATEST EDITION).

   E. ALL ELECTRICAL EQUIPMENT SHALL BE INSTALLED IN STRICT COMPLIANCE WITH THE MANUFACTURER'S INSTALLATION PROCEDURES.

   F. THE ELECTRICAL CONTRACTOR SHALL PROVIDE ALL LABOR AND MATERIALS NECESSARY FOR A COMPLETE ELECTRICAL SYSTEM, WHETHER SPECIFIED OR IMPLIED.

2. PERMITS:

   A. SECURE AND PAY FOR ALL REQUIRED PERMITS AND INSPECTION CERTIFICATES. ALL INSPECTIONS SHALL BE PERFORMED BY AN APPROVED THIRD–PARTY INSPECTOR.

3. SHOP DRAWINGS:

   A. SUBMIT MATERIAL LIST AND SHOP DRAWINGS FOR MAJOR EQUIPMENT TO THE GOVERNMENT FOR APPROVAL. SUBMITTALS SHALL BE IN ACCORDANCE WITH GENERAL CONDITIONS AND SHALL BEAR STAMP OF THE GENERAL CONTRACTOR SHOWING THAT HE HAS REVIEWED AND APPROVED THEM. LACK OF SUCH CONTRACTOR'S APPROVAL WILL BE CAUSE FOR REJECTION WITHOUT REVIEW BY THE GOVERNMENT.

   B. SUBMIT ALL SHOP DRAWINGS ELECTRONICALLY.

4. CONDUITS:

   A. THE TYPE OF CONDUIT SHALL BE AS FOLLOWS FOR ALL FEEDERS AND DISTRIBUTION CIRCUITS, UNLESS OTHERWISE SPECIFIED.

APPLICATION	TYPE OF CONDUIT
BURIED IN CONCRETE OR MASONARY, OR OUTDOORS	GALV. RIGID STEEL OR EMT W/ W.P. FITTINGS
UNDERGROUND	PVC – SCHED. 40
SUPPLY TO DISTRIBUTION PANELS	EMT
BRANCH CIRCUITS (CONCEALED)	MC
BRANCH CIRCUITS (EXPOSED)	EMT

5. WIRE:

   A. WIRE SHALL BE SINGLE CONDUCTOR COPPER WITH 600 VOLT INSULATION. #10 AND SMALLER SHALL BE SOLID. #8 AND LARGER SHALL BE STRANDED. MINIMUM WIRE SIZE SHALL BE #12 EXCEPT #14 MAY BE USED FOR CONTROL. ALL WIRE AND CABLE SHALL BE NEW AND SHALL BE BROUGHT TO THE SITE IN UNBROKEN PACKAGES. ALL WIRING OF ANY TYPE SHALL BE IN CONDUIT. GENERAL WIRING SHALL BE THW OR THHN (ALUMINUM CONDUCTORS ARE NOT PERMITTED).

   B. WIRE CONNECTORS SHALL BE EQUAL BY SCOTCHLOK FOR #6 AND SMALLER AND T & B "LITE–LOCK" OR LIQUIDTIGHT FOR #8 AND LARGER.

6. SAFETY SWITCHES:

   A. PROVIDE SAFETY AND DISCONNECT SWITCHES, FUSED OR NONFUSED, AS CALLED FOR ON DRAWINGS AND AS REQUIRED BY CODE. SWITCHES SHALL BE HEAVY DUTY, LOAD AND HORSEPOWER RATED AS MANUFACTURED BY SQUARE D, GOULD, ITE OR EQUAL.

7. BOXES:

   A. OUTLET BOXES AND COVERS SHALL BE GALVANIZED, ONE–PIECE PRESSED STEEL KNOCKOUT.

   B. JUNCTION, PULL BOXES AND COVERS SHALL BE GALVANIZED STEEL, CODE GAUGE SIZE. SERVICES:

8. SERVICES:

   A. PROVIDE ELECTRICAL SERVICE AS SHOWN ON THE DRAWINGS. ALL WORK NOT SPECIFICALLY NOTED AS BEING BY THE OWNER OR POWER COMPANY SHALL BE PROVIDED BY THE ELECTRICAL CONTRACTOR. CLOSELY CO–ORDINATE ENTIRE INSTALLATION WITH OWNER AND POWER COMPANY AS REQUIRED.

9. INSTALLATION:

   A. ALL ELECTRICAL WORK SHALL BE INSTALLED SO AS TO BE READILY ACCESSIBLE FOR OPERATING, SERVICING, MAINTAINING AND REPAIRING. HANGERS SHALL INCLUDE ALL MISCELLANEOUS STEEL SUCH AS CHANNELS, RODS, ETC., NECESSARY FOR THE INSTALLATION OF WORK AND SHALL BE FASTENED TO STEEL, CONCRETE OR WOOD, BUT NOT TO PIPING. ALL CONDUIT SHALL BE CONCEALED WHEREVER POSSIBLE. EXPOSED CONDUIT SHALL BE IN STRAIGHT LINES PARALLEL WITH OR AT RIGHT ANGLES TO COLUMN LINES OR BEAMS AND SEPARATED AT LEAST 3 INCHES FROM WATER LINES WHEREVER THEY RUN ALONG SIDE OR ACROSS SUCH LINES. CONDUCTORS SHALL BE IN CONDUIT, DUCTS OR APPROVED RACEWAYS.

   B. THE FOLLOWING EQUIPMENT SHALL BE IDENTIFIED WITH ENGRAVED BAKELITE NAMEPLATES AS TO NAME AND/OR FUNCTION; DISTRIBUTION PANEL, RV PEDESTALS, AND DISCONNECT SWITCHES.

   C. THE LOCATION OF DEVICES AND EQUIPMENT SHOWN ON THE DRAWINGS ARE APPROXIMATE. CONTRACTOR SHALL FIELD VERIFY EXACT LOCATION, ORIENTATION, CONFIGURATION, AND CONDITION OF ALL DEVICES AND EQUIPMENT PRIOR TO PERFORMING WORK.

   D. ELECTRICAL CONTRACTOR SHALL RECORD ALL FIELD CHANGES IN HIS WORK AS THE JOB PROGRESSES.

10. GUARANTEE:

   A. MATERIALS, EQUIPMENT AND INSTALLATION SHALL BE GUARANTEED FOR A PERIOD OF ONE (1) YEAR FROM DATE OF ACCEPTANCE. DEFECTS WHICH APPEAR DURING THAT PERIOD SHALL BE CORRECTED AT THIS CONTRACTOR'S EXPENSE.

   B. FOR THE SAME PERIOD, THE ELECTRICAL CONTRACTOR SHALL BE RESPONSIBLE FOR ANY DAMAGE TO PREMISES CAUSED BY DEFECTS IN WORKMANSHIP OR IN THE WORK OR EQUIPMENT FURNISHED AND/OR INSTALLED BY HIM.

11. FINALLY:

   A. IT IS THE INTENT THAT THE FOREGOING WORK SHALL BE COMPLETE IN EVERY RESPECT AND THAT ANY MATERIAL OR WORK NOT SPECIFICALLY MENTIONED OR SHOWN ON THE DRAWINGS, BUT NECESSARY TO FULLY COMPLETE THE WORK SHALL BE FURNISHED.

United States Department of Agriculture
Forest Service

REGION 1
NORTHERN REGION

PROJECT NAME
SAM OWEN CAMPGROUND IMPROVEMENTS

IDAHO PANHANDLE NATIONAL FORESTS

SANDPOINT RANGER DISTRICT

DRAWING TITLE
ELECTRICAL - 3

DATE
APRIL 2026

ARCHIVE NO.

DESIGNER
D. LEBSOCK

DRAWN
D. LEBSOCK

CHECKED
P. DRUYVESTEIN

PROJECT NO.
7431

DWG SHEET NO.
72

SHEET 72 OF 72

4/20/26 11:52 DANIEL.LEBSOCK C:\DJA-PWWORK\DJA-PROD\DMS29121\7431 - ELECTRICAL1.DWG: