IDIQ/MATOC
SAMPLE PROJECT A
Schedule of Items, Page 1 of 2
Colville NF, Tonasket RD
Okanogan County, Washington

BASE Cox Meadow Access Road Recondition **FSR 3005200 MP 0.0-1.9; FSR 3005220 MP 0.0-0.2**						**Cox Meadow Access Road**		
Item No.	**Description**	**Method ***	**Unit**	**3005200 Quantity**	**3005220 Quantity**	**Total Estimated Quantity**	**Unit Price**	**Cox Meadow BaseTotal**
15101	**Mobilization**	*LSQ*	*LS*	*ALL*	*ALL*	*ALL*	*$*	*$*
15219	**Establish Clearing Limits**	*CQ*	*MILE*	*1.9*	*0.2*	*2.10*	*$*	*$*
15708A	**Check Dams - Soil/Rock**	*AQ*	*EACH*	*112*	*0*	*112*	*$*	*$*
15708A	**Check Dams - Wattle 9" Diam**	*AQ*	*EACH*	*28*	*0*	*28*		
15713	**Soil Erosion and Pollution Control**	*LSQ*	*LS*	*ALL*	*ALL*	*ALL*	*$*	*$*
20103	**Clearing and Grubbing, Disposal Method 203.05 (f)**	*CQ*	*MILE*	*1.9*	*0.2*	*2.10*	*$*	*$*
20424	**Drainage Excavation, Leadout Ditch**	*CQ*	*LF*	*70*	*0*	*70*	*$*	*$*
20425	**Drainage Excavation, Type Drivable Drain Dip**	*AQ*	*EACH*	*2*	*0*	*2*	*$*	*$*
30315	**Roadway Reconditioning, Compaction Method 204.11 (a)(1)**	*CQ*	*MILE*	*1.9*	*0.2*	*2.10*	*$*	*$*
61907	**Remove and Reset Gate**	*AQ*	*EACH*	*1*	*0*	*1*	*$*	*$*
62201	**Equipment Rental, Hydraulic Excavator W/ Thumb**	*AQ*	*HOUR*	*7*	*1*	*8*	*$*	*$*
62504	**Seeding, Dry Method - Government Source**	*CQ*	*ACRE*	*4.61*	*0.48*	*5.09*	*$*	*$*

* Designated Method of Measurement AQ – Actual Quantity CQ – Contract Quantity LSQ – Lump Sum Quantity

BASE TOTAL PRICE *$*

Option 1 Cox Meadow Access Rd Recondition **FSR 3005200 MP 0.0-1.9; FSR 3005220 MP 0.0-0.2**

Item No.	**Description**	**Method ***	**Unit**	**3005200 Quantity**	**3005220 Quantity**	**Total Estimated Quantity**	**Unit Price**	**Option 1 Total**
20302	**Removal of Culverts, Disposal Method 203.05 (a)**	*AQ*	EACH	2	0	2	*$*	*$*
60201	**24-Inch Pipe Culvert, Corrugated Steel, 16-Gage, Compaction Method 204.11 (f)**	*AQ*	LF	70	0	70	*$*	*$*

* Designated Method of Measurement AQ – Actual Quantity CQ – Contract Quantity LSQ – Lump Sum Quantity

OPTION 1 TOTAL PRICE *$*

IDIQ/MATOC
SAMPLE PROJECT A
Schedule of Items, Page 2 of 2
Colville NF, Tonasket RD
Okanogan County, Washington

Option 2 Cox Meadow Access Rd Recondition **FSR 3005200 MP 0.0-1.9; FSR 3005220 MP 0.0-0.2**

Item No.	Description	Method *	Unit	3005200 Quantity	3005220 Quantity	Total Estimated Quantity	Unit Price	Option 2 Total
30207	**Aggregate Surface Course, Compaction Method 204.11 (a)(1) - Commercial Source****	*CQ*	*CY*	1472	155	1,627	*$*	*$*

* Designated Method of Measurement AQ – Actual Quantity CQ – Contract Quantity LSQ – Lump Sum Quantity

****Commerical Source Certified Weed Free by Forest Service**

OPTION 2 TOTAL PRICE *$*

BASE PLUS OPTION 1 TOTAL COST *$*

BASE PLUS OPTION 1 & OPTION 2 TOTAL COST *$*

Scope/Statement of Work

The estimate start work date is 15 days from issuance of Notice to Proceed with all work shall be completed within 60 calendar days.

Repair Cox Meadow Access Road from stormwater runoff and hydrologic damage to road prism.

Base Item – Cox Meadow Road Recondition (3005200, MP 0.0-1.90; 3005220, MP 0.0-0.20)

Project work items include, clearing & grubbing, roadway reconditioning, drivable drain dips, soil erosion and sediment control, check dams, leadout ditches, gate removal & reset, and permanent seeding.

Project Option 1 – FSR 3005200, MP 0.0 – 1.9.

Replacement of two 15" diameter culverts with 24" diameter culverts.

Project Option 2 – FSR 3005200, MP 0.0 – 1.9; 3005220, MP 0.0-0.20

Apply 4" Aggregate Surface Course 12 ft width.

Background

Road was used for access during a fire in 2018. No repair was implemented after fire. Minor drainage repairs were planned. However, other drainage issues have developed in intervening years.

Existing road is 13-16 feet in width with grades of 1-13%. Approximately 70% of roadway length has been damaged by runoff erosion. The erosion is not crossing the road but following wheel paths, rutting at centerline and washing out the road cross section along the alignment. Cut sections do not have drainage ditching on both sides of road. Fill sections have been windrowed in some instances so water is collected within roadway rather than sheet flow to fill. Crown of road is inadequate to drain water from roadway.

Location

Forest Service Road (FSR) 3005200 begins MP 0.00 at intersection with Lyman Lake Moses Meadow Road (C3785) MP 4.90 Right. 3005200 continues westerly to intersection with FSR 3005220 at MP 1.90. FS 3005200 begins at intersection with 3005200 continuing westerly to its terminus MP 2.20. Project ends at 3005220 MP 0.20 at Cox Meadow.

Latitude Longitude: Begin Project 3005200 MP 0.00, 48°29'33.3"N 119°01'02.8"W;

End Project 3005220 MP 0.20, 48°29'32.9"N 119°03'13.3"W

Project Location: Colville NF, Tonasket RD, Okanogan County, FSR 3005200, MP 0.00-1.90, Section 25, 26, 34, 35 & 36 T35N R30E, WM, Washington.

FSR 3005220, MP 0.0-0.20, Section 34 T35N R30E, WM, Washington.

Magnitude of Construction

The Government's estimate is between $250,000 and $500,000.

List of Attachments

List of Specifications and Forest Service Supplemental Specifications (FSSS)	39 pages
Plans and Drawings	16 pages
General Decision Number WA20260054, 5/18/26, Mod 2	9 pages
Fire Protection Requirements	9 pages

Evaluation Factors

The technical criteria (non-price factors), when combined, are approximately equal to price.

A. NON-PRICE EVALUATION FACTORS

Subfactor 1. Technical Approach and Evidence of Project Understanding.

a) Work Plan: Provide a project work plan detailing how you will accomplish the work. List resources dedicated to the project, include the type, make, model, year, and condition of equipment to be used on the project and the crew size to be utilized. Provide as much detail as you consider necessary to fully explain the proposed technical approach or method. Include how the work will be organized and performed in accordance with the specifications, drawings, terms and conditions of the Sample Task Order A.

b) Construction Schedule: Provide a Construction Schedule that includes an overall time frame for the project as well as the time frames and sequencing of each significant work element included in the project. If you are using subcontractors, please provide their information and the work they will be performing.

The construction schedule and technical approach must provide evidence that project requirements are fully understood. Acceptable proposals will show ability to complete the project within the time frames specified.

Subfactor 2. Project Management and Key Personnel/Subcontractor Experience/Qualifications.

Identify the key personnel and subcontractors proposed for use. Describe the position that each individual/entity will perform (i.e. project manager, site superintendent, quality control manager, lead equipment operator, etc.), and for each individual/entity, detail the respective qualifications and experience for the position held.

The Government will evaluate the Contractor's planned Project Management to ensure the key personnel and subcontractors to be utilized have the relevant experience and skills necessary to oversee the project and to ensure that high quality work is performed in a timely manner.

B. PRICE EVALUATION FACTOR

The completed Schedule of Items shall suffice for a price proposal. This criterion will (1) consider price reasonableness, and (2) be used to help determine the offeror's understanding of the work and whether the prices offered are realistic for the work required. The Government will evaluate offers by adding the total price for all option items to the total price for the basic requirement.

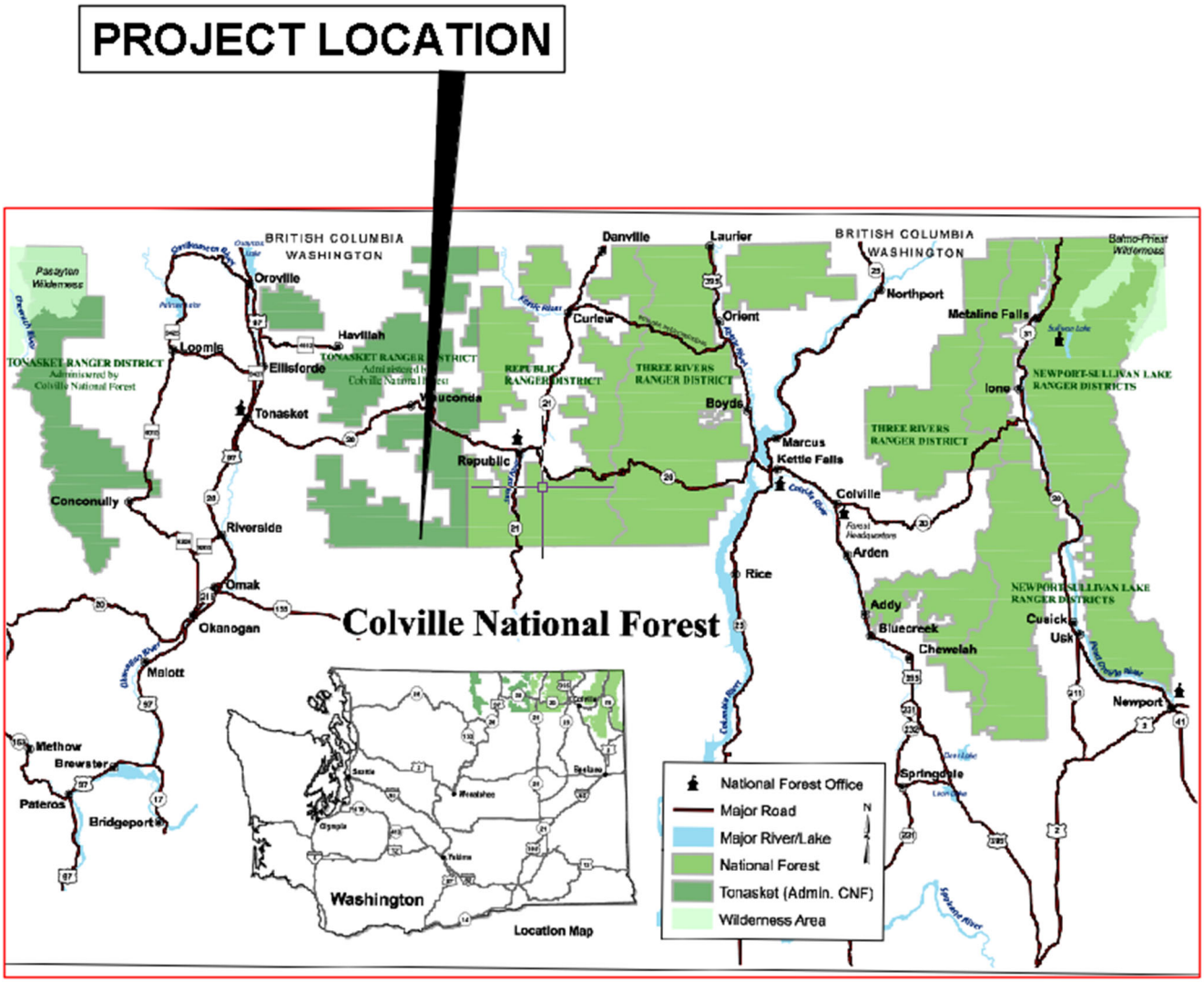

From Tonasket, WA

Drive east on SR 20 ~ 13 miles
Turn right on Aeneas Valley Rd
Destination Cox Meadow Rd
Drive south Aeneas Vally Rd ~12.7 miles
Turn right on Lyman Lake Moses Meadow Rd (C3785), drive ~ 4.9 miles
Turn right on FSR 3005200, Cox Meadow Access Road

FSR 3005200 MP 0.00 Cox Meadow Access Road

FSR 3005200 MP 1.90, FSR 3005220 MP 0.00 LEFT Cox Meadow Access Road

FSR 3005220 MP 0.20 Ahead - Cox Meadow Visible

Table of Contents

Preface 3
101 – Terms, Format, and Definitions 3
102 – Bid, Award, and Execution of Contract 6
103 - Scope of Work 6
104 - Control of Work 6
106 - Acceptance of Work 6
107 - Legal Relations and Responsibility to the Public 8
108 - Prosecution and Progress 8
109 - Measurement and Payment 8
152 - Construction Survey and Staking 9
153 - Contractor Quality Control 12
155 - Schedules for Construction Contracts 12
156 - Public Traffic 13
157 - Soil Erosion and Sediment Control 15
201 - Clearing and Grubbing 15
203 - Removal of Structures and Obstructions 15
204 - Excavation and Embankment 17
301 - Untreated Aggregate Courses 29
302 - Minor Crushed Aggregate 30
303 - Road Reconditioning 30
602 - Culverts and Drains 30
625 - Turf Establishment 31
703 - Aggregate 34
705 - Rock 39

Preface

Preface_wo_02_08_2019

Delete all but the first paragraph and add the following:

The Forest Service, US Department of Agriculture has adopted FP-14 for construction of National Forest System Roads.

101 – Terms, Format, and Definitions

101.01_National_11_9_2016

Add the following paragraph to Subsection 101.01:

101.01 Meaning of Terms.

Delete all references to the TAR (Transportation Acquisition Regulations) in the specifications.

101.03_National_11_9_2016

Add the following to Subsection 101.03:

101.03 Abbreviations.

(a) Acronyms.

AGAR — Agriculture Acquisition Regulations

AFPA — American Forest and Paper Association

FSAR — Forest Service Acquisition Regulations

MSHA — Mine Safety and Health Administration

NESC — National Electrical Safety Code

WCLIB — West Coast Lumber Inspection Bureau

(f) Miscellaneous unit abbreviations.

MP	—	milepost	location
ppm	—	parts per million	volume
STA		station	location

101.04_National_9_5_2018

Make the following changes to Subsection 101.04:

101.04 Definitions.

Delete these definitions and replace the following:

Bid Schedule — The Schedule of Items.

Bridge — A structure, including supports, erected over a depression or an obstruction such as water along a road, a trail, or a railway and having a deck for carrying traffic or other loads.

Contractor — The individual or legal entity contracting with the Government for performance of prescribed work. In a timber sale contract, the contractor is the "Purchaser".

Culvert — Any structure with a bottom, regardless of fill depth, depth of invert burial, or presence of horizontal driving surface, or any bottomless (natural channel) structure with footings that will not have wheel loads in direct contact with the top of the structure.

Drawings — (Public Works Contracts) Design sheets or fabrication, erection, or construction details submitted to the CO by the Contractor according to FAR Clause 52.236-21 Specifications and Drawings for Construction. Also refers to submissions and submittals.

Notice to Proceed — (Public Works Contracts) Written notice to the Contractor to begin the contract work.

Right-of-Way — A general term denoting (1) the privilege to pass over land in some particular line (including easement, lease, permit, or license to occupy, use, or traverse public or private lands), or (2) Real property necessary for the project, including roadway, buffer areas, access, and drainage areas.

Solicitation—(Public Works Contracts) The complete assembly of documents (whether attached or incorporated by reference) furnished to prospective bidders.

Add the following definitions:

Adjustment in Contract Price — "Equitable adjustment," as used in the Federal Acquisition Regulations, or "construction cost adjustment," as used in the Timber Sale Contract, as applicable.

Change — "Change" means "change order" as used in the Federal Acquisition Regulations, or "design change" as used in the Timber Sale Contract.

Forest Service — The United States of America, acting through the Forest Service, U.S. Department of Agriculture.

Neat Line — A line defining the proposed or specified limits of an excavation or structure.

Pioneer Road — Temporary construction access built along the route of the project.

Purchaser — The individual, partnership, joint venture, or corporation contracting with the Government under the terms of a Timber Sale Contract and acting independently or through agents, employees, or subcontractors.

Protected Streamcourse — A drainage shown on the plans or timber sale area map that requires designated mitigation measures.

Road Order — An order affecting and controlling traffic on roads under Forest Service jurisdiction. Road Orders are issued by a designated Forest Officer under the authorities of 36 CFR, part 260.

Shop Drawings — (Timber and Stewardship Contracts) Referred to as "Drawings" in FP-14, include drawings, diagrams, layouts, schematics, descriptive literature, illustrations, lists or tables, performance and test data, and similar materials furnished by Purchaser to explain in detail specific portions of the work required by the contract.

Utilization Standards — The minimum size and percent soundness of trees described in Public Works contract specifications or Timber Sale and IRTC contract provisions to determine merchantable timber.

Add Figure 101-1—Illustration of road structure terms:

Figure 101-1—Illustration of road structure terms.

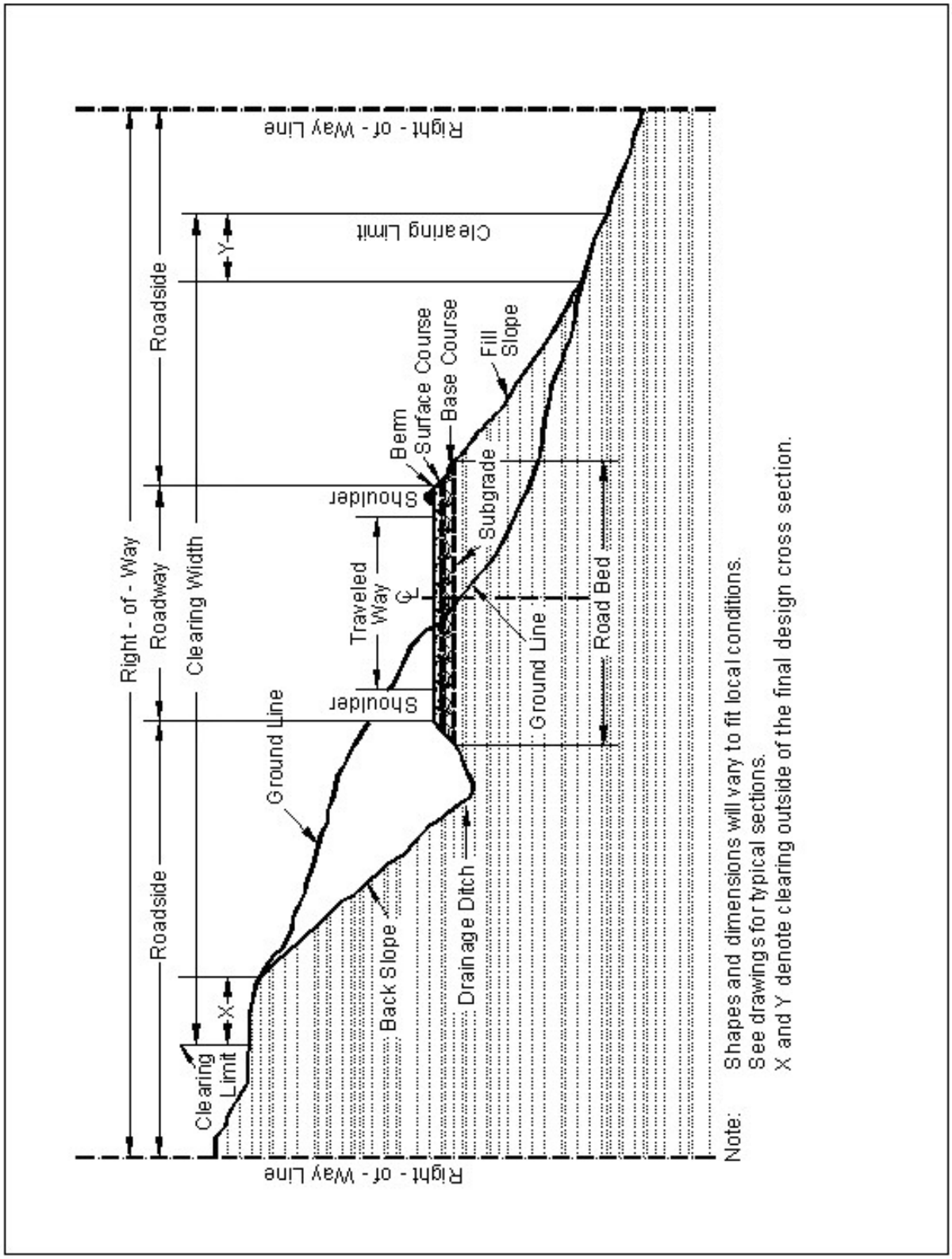

102 – Bid, Award, and Execution of Contract

102.00_National_11_9_2016

Delete Section 102 in its entirety.

Delete Section 102.

103 - Scope of Work

103.00_National_11_9_2016

Delete all of Section 103 except Subsection 103.01 Intent of Contract.

Delete Subsections 103.02, 103.03, 103.04, 103.05.

104 - Control of Work

104.00_National_11_9_2016

Delete Subsections 104.01, 104.02, and 104.04.

Delete Subsections 104.01, 104.02, 104.04.

104.06_National_11_9_2016

Add the following to Subsection 104.06:

104.06 Use of Roads by Contractor.

The Contractor is authorized to use roads under the jurisdiction of the Forest Service for all activities necessary to complete this contract, subject to the limitations and authorizations designated in the Road Order(s) or described in the contract, when such use will not damage the roads or national forest resources, and when traffic can be accommodated safely.

106 - Acceptance of Work

106.01_National_7_18_2017

Delete Subsection 106.01 and replace with the following:

106.01 Conformity with Contract Requirements.

Follow the requirements of FAR Clause 52.246-12 Inspection of Construction.

References to standard test methods of AASHTO, ASTM, GSA, and other recognized standard authorities refer to the methods in effect on the date of solicitation for bids.

Perform all work to the lines, grades, cross-sections, dimensions, and processes or material requirements shown on the plans or specified in the contract.

Incorporate manufactured materials into the work according to the manufacturer’s recommendations or to these specifications, whichever is more strict.

Plan dimensions and contract specification values are the values to be strived for and complied with as the design values from which any deviations are allowed. Perform work and provide material that is uniform in character and reasonably close to the prescribed value or within the specified tolerance range. The purpose of a tolerance range is to accommodate occasional minor variations from the median zone that are unavoidable for practical reasons.

When standard manufactured items are specified (such as fence, wire, plates, rolled shapes, pipe conduits, etc., that are identified by gauge, unit mass, section dimensions, etc.), the identification will be considered to be nominal masses or dimensions. Unless specific contract tolerances are noted, established manufacturing tolerances will be accepted.

The Government may inspect, sample, or test all work at any time before final acceptance of the project. When the Government tests work, copies of test reports are furnished to the Contractor upon request. Government tests may or may not be performed at the work site. If Contractor testing and inspection is verified by the Government, the Contractor's results may be used by the Government to evaluate work for acceptance. Do not rely on the availability of Government test results for process control.

Acceptable work conforming to the contract will be paid for at the contract unit bid price. Four methods of determining conformity and accepting work are described in Subsections 106.02 to 106.05 inclusive. The primary method of acceptance is specified in each Section of work. However, work may be rejected at any time it is found by any of the methods not to comply with the contract.

Remove, repair, or replace work that does not conform to the contract, or to prevailing industry standards where no specific contract requirements are noted. Removing, repairing, or replacing work; providing temporary traffic control; and any other related work to accomplish conformity will be at no cost to the Government.

(a) Disputing Government test results. If the accuracy of Government test results is disputed, promptly inform the CO. If the dispute is unresolved after reasonable steps are taken to resolve the dispute, further evaluation may be obtained by written request. Include a narrative describing the dispute and a proposed resolution protocol that addresses the following:

1. Sampling method;
2. Number of samples;
3. Sample transport;
4. Test procedures;
5. Testing laboratories;
6. Reporting;
7. Estimated time and costs; and
8. Validation process.

If the evaluation requires additional sampling or testing be performed, mutually agree with the Government on witnessing procedures and on sampling and testing by a third party laboratory. Use a third party laboratory accredited by the AASHTO accreditation program. Provide proof of the laboratory's accreditation for the test procedures to be used. Do not use the same laboratory that produced the disputed Government test results or that produced the test results used as a basis for the dispute.

The CO will review the proposed resolution protocol and may modify it before final approval and execution.

The Government will use the approved resolution protocol test results to determine the validity of the disputed testing. If the Government test results are validated, the Contractor will be responsible for all costs associated with developing and performing the resolution protocol. If the Government test results are not validated, the Government will be responsible for all costs associated with developing and performing the resolution protocol. If the validity of the

Government test results cannot be determined, the Contractor and Government will equally share all costs associated with developing and carrying out the resolution protocol.

(b) Alternatives to removing and replacing non-conforming work. As an alternative to removal and replacement, the Contractor may submit a written request to:

1. Have the work accepted at a reduced price; or
2. Be given permission to perform corrective measures to bring the work into conformity.

The request must contain supporting rationale and documentation. Include references or data justifying the proposal based on an evaluation of test results, effect on service life, value of material or work, quality, aesthetics, and other tangible engineering basis. The CO will determine disposition of the nonconforming work.

106.02_National_11_9_2016

Delete Subsection 106.02 and replace with the following:

106.02 Visual Inspection.

Acceptance is based on visual inspection of the work for compliance with the specific contract requirements. Use prevailing industry standards in the absence of specific contract requirements or tolerances.

107 - Legal Relations and Responsibility to the Public

107.05_National_7_18_2017

Delete Subsection 107.05:

Delete Subsection 107.05.

108 - Prosecution and Progress

108.00_National_11_9_2016

Delete Section 108 in its entirety:

Delete Section 108.

109 - Measurement and Payment

109.00_National_11_9_2016

Delete Subsections 109.06, 109.07, 109.08, and 109.09:

Delete Subsections 109.06, 109.07, 109.08, 109.09.

109.02_National_11_9_2016

Add the following sentence to Subsection 109.02(b):

109.02 Measurement Terms and Definitions.

(b) Contract quantity.

Contract quantities will be adjusted only when there are errors in the original design of 15% or more.

152 - Construction Survey and Staking

152.00_National_2_8_2019

Add the following to Subsection 152.04(c):

152.04 General.

(c) Material.

Use required stake dimensions and materials. Pre-paint the top 2 inches of all stakes and lath, or mark them with plastic flagging. Use designated colors for paint or flagging. Mark all stakes with a stake pencil that leaves a legible imprint, or with waterproof ink.

Do not use aerosol spray paints.

Use moisture-resistant paper for survey notes. Keep notes in books with covers that will protect the contents and retain the pages in numerical sequence.

Make the following changes to Subsection 152.05:

152.05 Survey and Staking Requirements.

Delete Subsection 152.05(d)(2) and replace with the following:

(d) Slope and reference stakes.

(2) Conventional survey methods. When required, locate slope stakes on designated portions of the road. Locate the slope stake catch points and use them to establish clearing limits and slope stake references.

Mark slope stakes with the station, the amount of cut or fill, the horizontal distance to centerline, and the slope ratios.

Place slope reference stakes at least 10 feet outside the clearing limit and mark with the offset distance to the slope stake. Place sight stakes when required.

Prior to clearing and grubbing operations, move the slope stake outside the clearing limit to the slope reference stake. After clearing and grubbing and before excavation, reset the slope stakes in their original position.

Use the designated method to establish the slope stake catchpoint.

Method I—Computed Method. Use the template information shown in the plans or other Government-provided data to calculate the actual location of the catchpoint. The slope stake "catchpoint distance" provided may be used as a trial location to initiate slope staking. Recatch slope stakes on any section that does not match the staking report within the tolerances established in Table 152-2.

Method II—Catchpoint Measurement Method. Determine the location of slope stake catchpoints by measuring the catchpoint distances shown in the plans or other Government-provided data.

Add the following to Subsection 152.05(e):

(e) Clearing and grubbing limits.

Mark the clearing limits with flagging or tags on trees to be left standing, or on lath. Make markings intervisible, and no more than 90 feet apart.

After establishing clearing limits, move the location line stake outside the clearing limits for station identification purposes, and mark it with horizontal distance to location line.

Replace Table 152-1 with the following:

Table 152-1 Construction Survey and Staking Tolerances

Table 152-1
Construction Survey and Staking Tolerances (1)

Staking Phase	Horizontal	Vertical
Control points set from existing Government control points- Tolerance Class A	±0.03 feet (±10 millimeters)	±0.01 feet × $\sqrt{N}$ (±3 millimeters × $\sqrt{N}$)(2)
Mapping, topography, and cross-section Points- Tolerance Class A	±0.16 feet (±50 millimeters)	±0.16 feet (±50 millimeters)
Centerline points (3) including (PC), (PT), (POT),(POC), and references- Tolerance Class A	±0.06 feet (±20 millimeters)	±0.06 feet (±20 millimeters)
Slope-stake and slope-stake references- Tolerance Class A (4)	±0.16 feet (±50 millimeters)	±0.16 feet ±50 millimeters)
Culverts, ditches, and minor drainage structures stakes- Tolerance Class A	±0.16 feet (±50 millimeters)	±0.06 feet (±20 millimeters)
Retaining walls stakes	±0.06 feet (±20 millimeters)	±0.03 feet (±10 millimeters)
Curb and gutter stakes	±0.06 feet (±20 millimeters)	±0.03 feet (±10 millimeters)
Bridge substructures stakes	±0.03 feet (±10 millimeters)(5)	±0.03 feet (±10 millimeters)
Bridge superstructures stakes	±0.03 feet (±10 millimeters)(5)	±0.03 feet (±10 millimeters)
Clearing and grubbing limit stakes- Tolerance Class A	±1.00 feet (±300 millimeters)	–
Roadway subgrade finish stakes- Tolerance Class A (6)	±0.16 feet (±50 millimeters)	±0.03 feet (±10 millimeters)
Roadway finish grade stakes (6)	±0.16 feet (±50 millimeters)	±0.03 feet (±10 millimeters)

Table 152-1
Construction Survey and Staking Tolerances (continued) (1)

Staking Phase	Horizontal	Vertical
Control points set from existing Government control points –Tolerance Class B (7)	±0.16 feet (±20 millimeters)	±0.16 feet × $\sqrt{N}$ (±20 millimeters × $\sqrt{N}$)(2)
Mapping, topography, and cross-section points–Tolerance Class B (7)	±1.00 feet (±300 millimeters)	±0.50 feet (±150 millimeters)
Centerline points including (PC), (PT), (POT),(POC), and references–Tolerance Class B (7)	±0.16 feet (±20 millimeters)	±0.16 feet (±20 millimeters)
Slope-stake and slope-stake references–Tolerance Class B (7)	±0.50 feet (±50 millimeters)	±0.16 feet ±50 millimeters)
Culverts, ditches, and minor drainage structures stakes–Tolerance Class B (7)	±0.50 feet (±150 millimeters)	±0.16 feet (±20 millimeters)
Clearing and grubbing limit stakes–Tolerance Class B (7)	±2.00 feet (±600 millimeters)	—
Roadway subgrade finish stakes–Tolerance Class B (7)	±0.50 feet (±50 millimeters)	±0.16 feet (±10 millimeters)
Roadway finish grade stakes–Tolerance Class B (7)	±0.50 feet (±50 millimeters)	±0.16 feet (±10 millimeters)

(1) At statistical 95 percent confidence level. Tolerances are relative to existing Government control points.

(2) N is the number of instrument setups.

(3) Centerline points: PC - point of curve, PT - point of tangent, POT - point on tangent, POC - point on curve.

(4) Take the cross-sections normal to the centerline ±1 degree.

(5) Bridge control is established as a local network and the tolerances are relative to that network.

(6) Includes paved ditches.

(7) Tolerance Class B for Very Low Volume Roads with an aggregate or native finished surface.

153 - Contractor Quality Control

153.02_National_2_8_2019

Delete Subsection 153.02 and replace with the following:

153.02 Qualifications.

Submit the following for approval with the quality control plan:

(a) Quality control manager (QCM). Furnish a QCM who has at least 2 years' experience in construction, inspector, quality control and material testing on construction projects of similar type and scope.

(b) Testers. Provide testers with at least one year experience in the type of sampling and testing required, and with one of the following for the type of sampling and testing performed:

(1) NICET Level II certification in highway material or equivalent state or industry certification;

(2) Certification by a regional certification program (such as Western Alliance for Quality Transportation Construction (WAQTC), Northeast Transportation Technician Certification Program (NETTCP), Southeast Task Force for Technician Training and Qualification (STFTTQ), or Multi Regional Training and Certification (M-TRAC)); or

(3) At least one year employment by an AASHTO accredited laboratory performing equivalent sampling and testing.

153.03_National_2_8_2019

Add the following paragraph to the end of Subsection 153.03(b):

153.03 Quality Control Plan.

(b) Quality Control Procedures.

Submit written proposals for approval of alternate AASHTO or State approved test methods. Alternate methods may be allowed based on documented equivalence to the specified method.

153.07_National_2_8_2019

Delete Subsection 153.07 and replace with the following:

153.07 Records and control charts.

Maintain complete testing and inspection records by pay item number and make them accessible to the CO.

155 - Schedules for Construction Contracts

155.00_National_2_8_2019

Delete Section 155 in its entirety:

Delete Section 155.

155.00_National_11_9_2016

Delete Section 155 in its entirety:

Delete Section 155.

156 - Public Traffic

156.00_National_2_8_2019

Delete Section 156 in its entirety and replace with the following:

Section 156. – Public Traffic

Description

156.01 This work consists of controlling and protecting public traffic adjacent to and within the project.

Material

156.02 Conform to the MUTCD and the following Sections and Subsections:

Permanent Traffic Control	633
Traffic Signing and Marking Material	718
Concrete Barriers and Precast Guardwalls	618
Temporary plastic fence	710.11

Construction Requirements

156.03 General. Accommodate traffic according to MUTCD, approved traffic control plan and this section. Perform work in a manner that ensures safety and convenience of the public. Unless otherwise provided for in Table 156-1, keep existing roads open to all traffic during road improvement work, and maintain them in a condition that will adequately accommodate traffic. Delays may not exceed **30** minutes at any one time followed by an open period of no less than **30** minutes. Accommodate public traffic on roads adjacent to and within the project until the project is accepted according to Subsection 106.07(b).

Submit traffic control plan at least 30 days prior to intended use. Perform no work that interferes or conflicts with traffic or existing access to the roadway surface until a traffic control plan has been approved.

Post construction signs and traffic control devices in conformance with MUTCD and Forest Service EM 7100-15. All required signs will be in place and approved prior to beginning work on project.

If the Contractor agrees in writing to allow public traffic to use a new road being constructed prior to completion, it will be considered an existing road for traffic control purposes.

156.04 Temporary Traffic Control. Install and maintain temporary traffic control devices adjacent to and within the project as required by the approved traffic control plan and the MUTCD. Install and maintain traffic control devices as follows:

(a) Furnish and install traffic control devices before the start of construction operations.

(b) All detours outside of clearing limits will be approved in writing by the Contracting Officer as part of the traffic control plan.

(c) Install only those traffic control devices needed for each stage or phase.

(d) Relocate temporary traffic control devices as necessary.

(e) Remove devices that no longer apply to the existing conditions.

(f) Immediately replace any device that is lost, stolen, destroyed, or inoperative.

(g) Keep temporary traffic control devices clean.

(h) Remove all temporary traffic control devices upon contract completion or when approved.

(i) When required, use flaggers certified by the American Traffic Safety Services Association, the National Safety Council, the International Municipal Signal Association, a state agency, or other acceptable organization. Perform the work described under MUTCD Part 6. Use type III, VII, VIII, or IX retroreflective sheeting on flagger paddles. Do not use flags. Flaggers must wear high visibility safety apparel as required by MUTCD 6E.02.

156.05 Temporary Closures. Road segments may be closed as shown in Table 156-1. The maximum consecutive days of closure shall be followed by a minimum number of consecutive days open to traffic as shown. Maintain traffic control devices during closure period(s). Appropriate barricades and signs will be erected and maintained as shown in the traffic control plan or as otherwise designated.

Prior to closing roads during construction, give written notice to the Contracting Officer at least 10 days in advance.

Table 156-1
Temporary Road Closures

Road Number	From Terminus	To Terminus	Maximum Consecutive Days of Closure	Minimum Consecutive Days Open
Not Applicable (NA)	**NA**	**NA**	**NA**	**NA**

156.06 Acceptance. Public traffic work will be evaluated under Subsection 106.02.

Measurement and Payment

156.07 Do not measure Public Traffic for payment. Payment for contract work is provided indirectly. See Subsection 109.05.

157 - Soil Erosion and Sediment Control

157.04_National_2_8_2019

Delete Subsection 157.04 and replace with the following:

157.04 General.

Thirty (30) days prior to the start of construction, submit a written plan according to subsection 104.03 with all necessary permits that provides permanent and temporary erosion control measures to minimize erosion and sedimentation during and after construction. Do not begin work until the necessary controls for that particular phase of work have been implemented. Do not modify the type, size, or location of any control without approval.

When erosion control measures are not functioning as intended, take corrective action to eliminate or minimize pollutants in storm water discharges from the project.

201 - Clearing and Grubbing

201.04_National_2_8_2019

Add the following paragraph to Subsection 201.04:

201.04 Clearing.

(e) Do not cut vegetation less than 3 feet in height and less than 3 inches in diameter that is within the clearing limits but beyond the roadway and not in a decking area and that does not interfere with sight distance along the road unless otherwise designated.

201.06_National_2_8_2019

Delete the first sentence of Subsection 201.06 and replace the following:

201.06 Disposal.

Merchantable timber is Government property.

203 - Removal of Structures and Obstructions

203.04_National_2_8_2019

Make the following changes to Subsection 203.04(b):

203.04 (b) General.

Delete the fifth paragraph of Subsection 203.04(b) and replace with the following:

Remove structures and obstructions in the roadbed to 12 inches (300 millimeters) below subgrade elevation. Remove structures and obstructions outside the roadbed to 12 inches (300 millimeters) below finished ground or to the natural stream bottom.

Delete the seventh paragraph of Subsection 203.04(b) and replace with the following:

When abandoning an existing culvert pipe, remove the upstream and downstream portion of the culvert to within 12 inches (300 millimeters) of the subgrade or embankment slope. Ensure the abandoned pipe is at least 48 inches (1200 millimeters) from a new culvert or structure. Seal the abandoned culvert ends with a tight-fitting plug of concrete at least 6 inches (150 millimeters) thick. Ensure the structure does not entrap water.

Add the following to Subsection 203.05:

203.05 Disposing of Material.

(e) Windrowing Construction Slash. Place construction slash outside the roadway in neat, compacted windrows approximately parallel to and along the toe line of embankment slopes. Do not permit the top of the windrows to extend above subgrade. Use construction equipment to matt down all material in a windrow to form a compact and uniform pile. Construct breaks of at least 15 feet at least every 200 feet in a windrow. Do not place windrows against trees.

(f) Scattering. Scatter construction slash in designated areas without damaging trees. Limb all logs. Place logs and stumps away from trees, positioned so they will not roll, and are not on top of one another. Limb and scatter other construction slash to reduce slash concentrations. When scattering for erosion control, place construction slash as flat as practicable on the completed slope.

(g) Chipping. Use an approved chipping machine to chip slash longer than 3 feet. Deposit chips on embankment slopes or outside the roadway to a loose depth less than 6 inches. Minor amounts of chips or ground woody material may be permitted within the roadway if they are thoroughly mixed with soil and do not form a layer.

(h) Debris Mat. Use tree limbs, tops, cull logs, split stumps, wood chunks, and other debris to form a mat upon which construction equipment is operated. Place stumps upside down and blend stumps into the mat.

(i) Decking. Remove brush from designated log deck areas. Limb and top logs.

Logs not meeting the Utilization Standards described in Subsection 201.04(c) shall be cut to lengths less than **NA** feet and decked in designated log deck location.

Merchantable timber not associated with an existing timber sale shall be cut to length meeting the Utilization Standards described in Subsection 201.04(c).

Deck logs so that logs are piled parallel to one another; can be removed by standard log loading equipment; will not damage standing trees; will not interfere with drainage, and will not roll. Keep logs in log decks free of brush and soil.

(j) Removal to designated locations. Remove construction slash to designated locations.

(k) Piling. Pile construction slash in designated areas. Place and construct piles so that if the piles are burned, the burning will not damage remaining trees. Keep piles free of dirt from stumps.

204 - Excavation and Embankment

204.00_National_2_8_2019

Delete Section 204 in its entirety and replace with the following:

Section 204. — Excavation and Embankment

Description

204.01 This work consists of excavating material and constructing embankments. This work also includes furnishing, hauling, stockpiling, placing, disposing, sloping, shaping, compacting, and finishing earthen and rocky material.

204.02 Definitions.

(a) Excavation. Excavation consists of the following:

(1) Roadway excavation. Material excavated from within the right-of-way or easement areas, except subexcavation covered in Subsection 204.02(a)(2) and structure excavation covered in Sections 208 and 209. Roadway excavation includes all material encountered regardless of its nature or characteristics.

(2) Subexcavation. Material excavated from below subgrade elevation in cut sections or from below the original ground-line in embankment sections. Subexcavation excludes the work required by Subsection 204.05 or 204.06.

(3) Borrow excavation. Material used for embankment construction that is obtained from outside the roadway prism. Borrow excavation includes unclassified borrow, and topping.

(b) Embankment construction. Embankment construction consists of placing and compacting roadway or borrow excavation. This work includes:

(1) Preparing foundation for embankment;

(2) Constructing roadway embankments;

(3) Benching for side-hill embankments;

(4) Constructing dikes, ramps, mounds, and berms; and

(5) Backfilling subexcavated areas, holes, pits, and other depressions.

(c) Conserved topsoil. Excavated material conserved from the roadway excavation and embankment foundation areas that is suitable for growth of grass, cover crops, or native vegetation.

(d) Waste. Excess and unsuitable roadway excavation and subexcavation that cannot be used.

Material

204.03 Conform to the following Subsections:

Topping	704.05
Unclassified borrow	704.06

Water	725.01(c)

Construction Requirements

204.04 Preparation for Roadway Excavation and Embankment Construction. Clear the area of vegetation and obstructions according to Sections 201 and 203.

Road pioneering, slash disposal, and grubbing of stumps may proceed concurrently with excavation and embankment. Maintain drainage during pioneering operations.

204.05 Conserved Topsoil. When designated, conserve topsoil from roadway excavation and embankment foundation areas. Stockpile conserved topsoil in low windrows immediately beyond the rounding limits of cut and embankment slopes or in other approved locations. Separate conserved topsoil from other excavated material. When designated, place conserved topsoil on completed slopes according to Section 624.

204.06 Roadway Excavation. Excavate as follows:

(a) Rock cuts. Blast rock according to Section 205. Excavate rock cuts to 6 inches (150 millimeters) below subgrade within the roadbed limits. Backfill to subgrade with topping or other suitable material. Compact the material according to Subsection 204.11.

(b) Earth cuts. Scarify earth cuts to 6 inches (150 millimeters) below subgrade within the roadbed limits. Compact the scarified material according to Subsection 204.11.

(c) Pioneer Roads. Conduct excavation and placement operations so material to be treated under Section 201 will not be incorporated into the roadway unless specified in the slash treatment method. Maintain drainage during pioneering operations.

Remove snow and ice in advance of the work and deposit beyond the roadway limits in a manner that will not waste material or generate sediment. Do not incorporate snow and ice into embankments. Place snow or ice in a manner to prevent resource damage.

(d) Drainage Feature. Drainage feature includes construction of all ditches, minor channel changes, drainage dips, catch basins, surface water deflectors, and other minor drainage structures. Compact the material according to Subsection 204.11. Excavate on a uniform grade between control points.

Do not disturb material and vegetation outside the construction limits. Retrieve material deposited outside the construction limits. Dispose of unsuitable or excess excavation material according to Subsection 204.14. Replace shortage of suitable material caused by premature disposal of roadway excavation.

Shape to drain and compact the work area to a uniform cross-section at the end of each day's operations.

204.07 Subexcavation. Excavate material to the required limits. Dispose of unsuitable material according to Subsection 204.14. Take cross-sections according to Section 152. Backfill subexcavated area with suitable material in horizontal layers not exceeding 12 inches (300 millimeters) in compacted thickness and compact according to Subsection 204.11. Prevent unsuitable material from mixing with suitable backfill material.

204.08 Borrow Excavation. Use suitable roadway excavation in embankment construction. Do not use borrow excavation when it results in excess roadway excavation. Deduct excess borrow excavation from the total borrow excavation quantity.

Obtain borrow source approval according to Subsection 105.02. Develop and restore borrow sources according to Subsections 105.03 and 105.06. Do not excavate beyond the established limits. When applicable, shape the borrow source to permit accurate measurements when excavation is complete.

204.09 Preparing Foundation for Embankment Construction. Prepare foundation for embankment construction as follows:

(a) Embankment over natural ground. Remove topsoil and break up the ground surface to a minimum depth of 6 inches (150 millimeters) by plowing or scarifying. Compact the ground surface according to Subsection 204.11.

(b) Embankments over an existing asphalt, concrete, or gravel road surface. Scarify gravel roads to a minimum depth of 6 inches (150 millimeters). Scarify or pulverize asphalt and concrete roads to 6 inches (150 millimeters) below the pavement. Reduce particles to a maximum size of 6 inches (150 millimeters) and produce a uniform material. Compact the surface according to Subsection 204.11.

(c) Embankment across ground not capable of supporting equipment. Dump successive loads of embankment material in a uniformly distributed layer to construct the lower portion of the embankment. Limit the layer thickness to the minimum depth necessary to support the equipment.

(d) Embankment on an existing slope steeper than 1V:3H. Cut horizontal steps in the existing slope to a sufficient width to accommodate placement and compaction operations and equipment. Step the slope as the embankment is placed and compacted in layers. Begin each step at the intersection of the original ground and the vertical cut of the previous step.

204.10 Embankment Construction. Incorporate only suitable roadway excavation material into the embankment. When the supply of suitable roadway excavation is exhausted, furnish unclassified borrow to complete the embankment. Obtain written approval before beginning construction of embankments over 6 feet (2 meters) high at subgrade centerline. Construct embankments as follows:

(a) General. At the end of each day's operations, shape to drain and compact the embankment surface to a uniform cross-section. Eliminate ruts and low spots that could hold water.

During all stages of construction, route and distribute hauling and leveling equipment over the width and length of each layer of material.

Compact embankment side slopes with a tamping foot roller, by walking with a dozer, or by over-building the fill and then removing excess material to the final slope line. For slopes 1V:1¾H or steeper, compact the slopes as embankment construction progresses.

(b) Embankment within the roadway prism. Place embankment material in horizontal layers not exceeding 12 inches (300 millimeters) in compacted thickness. Incorporate oversize boulders or rock fragments into the 12-inch (300-millimeter) layers by reducing them in size or placing them individually as required below. Compact each layer according to Subsection 204.11 before placing the next layer.

Material composed predominately of boulders or rock fragments too large for 12-inch (300-millimeter) layers may be placed in layers up to 24 inches (600 millimeters) thick. Incorporate oversize boulders or rock fragments into the 24-inch (600-millimeter) layer by reducing them in size or placing individual rock fragments and boulders greater than 24 inches (600 millimeters) in diameter as follows:

(1) Reduce rock to less than 48 inches (1200 millimeters) in the largest dimension;

(2) Distribute rock within the embankment to prevent nesting;

(3) Place layers of embankment material around each rock to a depth not greater than that permitted above. Fill voids between rocks; and

(4) Compact each layer according to Subsection 204.11(a) before placing the next layer.

(c) Embankment outside of roadway prism. When placing embankment outside the staked roadway prism, place material in horizontal layers not exceeding 24 inches (600 millimeters) in compacted thickness. Compact each layer according to Subsection 204M.

204.11 Compaction. Compact the embankment using one of the following methods as specified.

(a) Placement Method 1. Use AASHTO T 27 to determine the quantity of material retained on a No. 4 (4.75-millimeter) sieve. Compact as follows:

(1) More than 80 percent retained on a No. 4 (4.75-millimeter) sieve. Adjust the moisture content to a level suitable for compaction. Fill the interstices around rock with earth or other fine material as practical. Use compression-type rollers at speeds less than 6 feet (1.8 meters) per second and vibratory rollers at speeds less than 3 feet (1 meter) per second. Compact each layer of material full width with one of the following and until there is no visible evidence of further consolidation:

(a) Four roller passes of a vibratory roller having a minimum dynamic force of 40,000 pounds (180 kilonewtons) impact per vibration and a minimum frequency of 1000 vibrations per minute;

(b) Eight roller passes of a 20-ton (20-metric ton) compression-type roller; or

(c) Eight roller passes of a vibratory roller having a minimum dynamic force of 30,000 pounds (130 kilonewtons) impact per vibration and a minimum frequency of 1000 vibrations per minute.

Increase the compactive effort for layers deeper than 12 inches (300 millimeters) as follows:

- For each additional 6 inches (150 millimeters) or fraction thereof, increase the number of roller passes in Subsection 204.11(a)(1)(a), by four passes; or
- For each additional 6 inches (150 millimeters) or fraction thereof, increase the number of roller passes in Subsection 204.11(a)(1)(b) and (c), by eight passes.

(2) 50 to 80 percent retained on a No. 4 (4.75-millimeter) sieve. Classify the material according to AASHTO M 145. Adjust the moisture content of material classified A-1 through A-5 to a moisture content suitable for compaction. Adjust the moisture content of material classified A-6 and A-7 to within 2 percent of the optimum moisture content. Use AASHTO T 99 to determine the optimum moisture content of the portion of the material passing a No. 4 (4.75-millimeter) sieve. Multiply this number by the percentage of material passing a No. 4 (4.75-millimeter) sieve, and add 2 percent to determine the optimum moisture content of the material.

Use nonvibratory rollers at speeds less than 6 feet (1.8 meters) per second and vibratory rollers at speeds less than 3 feet(1 meter) per second. Compact each layer of material full width according to Subsection 204.11(a)(1).

(3) Less than 50 percent retained on a No. 4 (4.75-millimeter) sieve. Classify the material according to AASHTO M 145. For material classified A-1 or A-2-4, determine the maximum density according to AASHTO T 99, Method C.

Adjust the moisture content of material classified A-1 through A-5 to a moisture content suitable for compaction. Adjust the moisture content of material classified A-6 and A-7 to within 2 percent of the optimum moisture content.

Use compression-type or vibratory rollers. Compact each layer of material full width to at least 95 percent of the maximum density. Determine the in-place density and moisture content according to AASHTO T 310 or other approved test procedures. When required, use AASHTO T 224 to correct for coarse particles.

(b) Placement Method 2. Adjust the moisture content of the material to a moisture content suitable for compaction. Fill the interstices around rock with earth or other fine material as practical. Operate roller compaction equipment over the full width of each layer until there is no visible evidence of further consolidation or, if when a sheepsfoot roller is used, the roller "walks out" of the layer. Make at least three complete passes. Use compression-type rollers at speeds less than 6 feet (1.8 meters) per second and vibratory rollers at speeds less than 3 feet (1 meter) per second. Ensure rollers meet the following requirements:

(1) Steel wheeled rollers, other than vibratory, capable of exerting a force of not less than 250 pounds per inch (4.5 kilogram/millimeter) of width of the compression roll or rolls.

(2) Vibratory steel wheeled rollers equipped with amplitude and frequency controls with a minimum dynamic force of 30,000 pounds (130 kilonewtons) impact per vibration, specifically designed to compact the material on which it is used.

(3) Pneumatic-tired rollers with smooth tread tires of equal size that will provide a uniform compacting pressure for the full width of the roller and capable of exerting a ground pressure of at least 80 psi (550 Kilopascals).

(4) Sheepsfoot, tamping, or grid rollers capable of exerting a force of 250 pounds per inch (4.5 kilogram/millimeter) of width of roller drum.

(c) Placement Method 3. Adjust the moisture content of the material to a moisture content suitable for compaction. Fill the interstices around rock with earth or other fine material as practical. Operate hauling and spreading equipment uniformly over the full width of each layer until there is no visible evidence of further consolidation. Make at least three complete passes.

(d) Placement Method 4. Adjust the moisture content of the material to a moisture content suitable for compaction. Fill the interstices around rock with earth or other fine material as practical. Operate hauling and spreading equipment uniformly over the full width of each layer.

(e) Placement Method 5. Adjust the moisture content of the material to a moisture content suitable for compaction. Compact the complete surface with a bucket of an excavator larger than 39,000 pounds (18 metric ton) Gross Vehicle Weight using a minimum of three blows. Overlap compaction by ½ width of bucket.

(f) Placement Method 6. Adjust the moisture content of the material to a moisture content suitable for compaction. Compact using an approved mechanical tamper for a minimum of three complete passes.

When compacting with rollers or hauling and spreading equipment is not practical, use approved mechanical tampers for a minimum of three complete passes.

204.12 Drainage Features. Slope, grade, and shape all drainage features. Remove projecting roots, stumps, rock, or similar matter. Maintain all drainage features in an open condition and without sticks, and other debris.

Form furrow ditches by plowing or using other acceptable methods to produce a continuous furrow. Place excavated material on the downhill side so the bottom of the ditch is approximately 18 inches (450 millimeters) below the crest of the loose material. Clean the ditch using a hand shovel or other suitable method. Shape to provide drainage without overflow.

204.13 Sloping, Shaping, and Finishing. Complete subgrade, slopes, drainage features, culverts, riprap, and other underground minor structures before placing aggregate courses. Slope, shape, and finish to the designated tolerance class as defined in Table 204-2 as follows:

(a) Sloping. Leave earth slopes with uniform roughened surfaces, except as described in Subsection 204.13(b), with no noticeable break as viewed from the road. Except in solid rock, round tops and bottoms of slopes including the slopes of drainage ditches. Round material overlaying solid rock to the extent practical. Scale rock slopes. Slope rounding is not required on tolerance class D through M roads.

If a slide or slipout occurs on a cut or embankment slope, remove or replace the material and repair or restore damage to the work. Bench or key the slope to stabilize the slide. Reshape the cut or embankment slope to an acceptable condition.

(b) Stepped slopes. Where required, construct steps on slopes of 1⅓V:1H to 1V:2H. Construct the steps approximately 18 inches (450 millimeters) high. Blend the steps into natural ground at the end of the cut. If the slope contains non-rippable rock outcrops, blend steps into the rock. Remove loose material found in transitional area. Except for removing large rocks that may fall, scaling stepped slopes is not required.

(c) Shaping. Shape the subgrade to a smooth surface and to the cross-section required. Shape slopes to gradually transition into slope adjustments without noticeable breaks. At the ends of cuts and at intersections of cuts and embankments, adjust slopes in the horizontal and vertical planes to blend into each other or into the natural ground.

(d) Finishing. Ensure that the subgrade is visibly moist during shaping and dressing; smooth and uniform, and shaped to conform to the typical sections. Remove material larger than 6 inches (150 millimeters) from the top 6 inches (150 millimeters) of the roadbed. Remove unsuitable material from the roadbed, and replace it with suitable material. Scarify to 6 inches (150 millimeters) below the bottom of low sections, holes, cracks, or depressions and bring back to grade with suitable material.

Maintain proper ditch drainage.

204.14 Disposal of Unsuitable or Excess Material. Dispose of unsuitable or excess material at designated sites or according to Subsection 203.05(a)

When there is a pay item for waste, shape and compact the waste material in its final location. Do not mix clearing or other material not subject to payment with the waste material.

204.15 Acceptance. See Table 204-1 for sampling, testing, and acceptance requirements.

Material for embankment and conserved topsoil will be evaluated under Subsections 106.02 and 106.04.

Excavation and embankment construction will be evaluated under Subsections 106.02 and 106.04.

Subexcavation will be evaluated under Subsections 106.02 and 106.04.

Measurement

204.16 Measure the Section 204 pay items listed in the bid schedule according to Subsection 109.02 and the following as applicable:

(a) Roadway excavation. Measure roadway excavation in its original position as follows:

(1) Include the following volumes in roadway excavation:

(a) Roadway prism excavation;

(b) Rock material excavated and removed from below subgrade in cut sections;

(c) Unsuitable material below subgrade and unsuitable material beneath embankment areas when a pay item for subexcavation is not listed in the bid schedule;

(d) Ditches, except furrow ditches measured under a separate pay item;

(e) Conserved topsoil;

(f) Borrow material used in the work when a pay item for borrow is not listed in the bid schedule;

(g) Loose scattered rocks removed and placed as required within the roadway;

(h) Conserved material taken from pre-existing stockpiles and used in Section 204 work, except topsoil measured under 624; and

(i) Slide and slipout material not attributable to the Contractor's method of operation.

(2) Do not include the following in roadway excavation:

(a) Overburden and other spoil material from borrow sources;

(b) Overbreakage from the backslope in rock excavation;

(c) Water or other liquid material;

(d) Material used for purposes other than required;

(e) Roadbed material scarified in place and not removed;

(f) Material excavated when stepping cut slopes;

(g) Material excavated when rounding cut slopes;

(h) Preparing foundations for embankment construction;

(i) Material excavated when benching for embankments;

(j) Slide or slipout material attributable to the Contractor's method of operation;

(k) Conserved material taken from stockpiles constructed at the option of the Contractor;

(l) Material excavated outside the established slope limits; and

(m) Road pioneering for the convenience of the Contractor.

(3) When both roadway excavation and embankment construction pay items are listed in the bid schedule, measure roadway excavation only for the following:

(a) Unsuitable material below subgrade in cuts and unsuitable material beneath embankment areas when a pay item for subexcavation is not listed in the bid schedule;

(b) Slide and slipout material not attributable to the Contractor’s method of operations; and

(c) Drainage ditches, channel changes, and diversion ditches.

(b) Unclassified borrow, and topping. When measuring by the cubic yard (cubic meter) measure in its original position. If borrow excavation is measured by the cubic yard (cubic meter) in-place, take initial cross-sections of the

ground surface after stripping overburden. Upon completion of excavation and after the borrow source waste material is returned to the source, retake cross-sections before replacing the overburden. Do not measure borrow excavation until suitable roadway excavation is depleted.

(c) Embankment construction. Measure embankment construction in its final position. Do not make deductions from the embankment construction quantity for the volume of minor structures.

(1) Include the following volumes in embankment construction:

(a) Roadway embankments;

(b) Material used to backfill subexcavated areas, holes, pits, and other depressions;

(c) Material used to restore obliterated roadbeds to original contours; and

(d) Material used for dikes, ramps, mounds, and berms.

(2) Do not include the following in embankment construction:

(a) Preparing foundations for embankment construction;

(b) Adjustments for subsidence or settlement of the embankment or of the foundation on which the embankment is placed; and

(c) Material used to round fill slopes.

(d) Rounding cut slopes. If a pay item for slope rounding is included in the bid schedule measure rounding cut slopes horizontally along the centerline of the roadway. If a pay item is not included for slope rounding is not included in the bid schedule payment will be considered indirect to roadway excavation.

(e) Waste. Measure waste by the cubic yard (cubic meter) in its final position. Take initial cross-sections of the ground surface after stripping over-burden. Upon completion of the waste placement, retake cross-sections before replacing overburden.

(f) Slope scaling. Measure slope scaling by the cubic yard (cubic meter) in the hauling vehicle.

(g) Subexcavation. Measure subexcavation by the cubic yard (cubic meter) in its original position.

(h) Drainage features. Measurement includes all excavation, embankment, shaping, and grading necessary for a completed drainage feature.

Payment

204.17 The accepted quantities will be paid at the contract price per unit of measurement for the Section 204 pay items listed in the bid schedule. Payment will be full compensation for the work prescribed in this Section. See Subsection 109.05.**Table 204-1**

Sampling, Testing, and Acceptance Requirements

Material or Product (Subsection)	Type of Acceptance (Subsection)	Characteristic	Category	Test Methods Specifications	Sampling Frequency	Point of Sampling	Split Sample	Reporting Time
Source								
Topping (704.05)	Measured and tested for conformance (106.04 & 105)	Classification[1]	–	AASHTO M 145	1 per soil type and source of material	Processed material	Yes	Before using in work
Unclassified borrow (704.06)	"	"	–	"	"	"	"	"
Production								
Topping (704.05) and (204.11(a))	Measured and tested for conformance (106.04)	Moisture-density	–	T 99, Method C[2]	1 per soil type, but not less than 1 per each 13,000 yd^3 (10,000 m^3)	Processed material	Yes	Before using in work

204.17 The accepted quantities will be paid at the contract price per unit of measurement for the Section 204 pay items listed in the bid schedule. Payment will be full compensation for the work prescribed in this Section. See Subsection 109.05.**Table 204-1**

Sampling, Testing, and Acceptance Requirements

Material or Product (Subsection)	Type of Acceptance (Subsection)	Characteristic	Category	Test Methods Specifications	Sampling Frequency	Point of Sampling	Split Sample	Reporting Time
		Density	–	AASHTO T 310 or other approved procedures	1 per 3500 yd^2 (3000 m^2), but not less than 3 per layer	In-place	No	Before placement of next layer
Unclassified borrow (704.06) and (204.11(a))	"	Moisture-density	–	T 99, Method C(2)	1 per soil type, but not less than 1 per each 13,000 yd^3 (10,000 m^3)	Processed material	Yes	Before using in work
		Density	–	AASHTO T 310 or other approved procedures	1 per 3500 yd^2 (3000 m^2), but not less than 3 per layer	In-place	No	Before placement of next layer
Production (continued)								
Earth embankment (204.11(a))	Measured and tested for conformance (106.04)	Classification	–	AASHTO M 145	1 per soil type	Source of material	Yes	Before using in work
		Moisture-density	–	T 99, Method C(2)	1 per soil type, but not less than 1 per each 13,000 yd^3 (10,000 m^3)	"	"	"

204.17 The accepted quantities will be paid at the contract price per unit of measurement for the Section 204 pay items listed in the bid schedule. Payment will be full compensation for the work prescribed in this Section. See Subsection 109.05.**Table 204-1**

Sampling, Testing, and Acceptance Requirements

Material or Product (Subsection)	Type of Acceptance (Subsection)	Characteristic	Category	Test Methods Specifications	Sampling Frequency	Point of Sampling	Split Sample	Reporting Time
		Density	–	AASHTO T 310 or other approved procedures	1 per 3500 yd^2 (3000 m^2), but not less than 3 per layer	In-place	No	Before placement of next layer
Top of subgrade (204.11(a))	"	Density	–	AASHTO T 310 or other approved procedures	1 per 2500 yd^2 (2000 m^2), but not less than 3 per layer	In-place	No	Before placement of next layer
Finished Product								
Roadbed (204.13)	Measured and tested for conformance (106.04)	Final line & grade	–	Field measured	Determined by the CO	Determined by the CO	No	Before placement of next layer

(1) Not required when using Government-provided source.
(2) Minimum 5 points per proctor.

Table 204-2
Construction Tolerances

Location Description	Tolerance Class (a)												
	A	B	C	D	E	F	G	H	I	J	K	L	M
Roadbed width (ft)	+0.5	+0.5	+1.0	+1.0	+1.0	+1.0	+1.5	+1.0	+2.0	+2.0	+2.0	+2.0	+2.0
Subgrade elevation (ft)	±0.1	±0.2	±0.2	±0.5	±0.5	±1.0	±1.0	±1.5	±2.0	±3.0	±2.0	±3.0	(c)
Centerline alignment (ft)	±0.2	±0.2	±0.5	±0.5	±1.0	±1.0	±1.5	±1.5	±2.0	±3.0	±3.0	±5.0	(c)
Slopes, excavation, and embankment (% slope[b])	±3	±5	±5	±5	±5	±5	±10	±10	±10	±10	±20	±20	±20

(a) Maximum allowable deviation from construction stakes and drawings.
(b) Maximum allowable deviation from staked slope measured from slope stakes or hinge points.
(c) Unless otherwise shown the centerline alignment and subgrade elevation, as built, have no horizontal curves with a radius of less than 80 feet, and no vertical curves with a curve length of less than 80 feet when the algebraic difference in the grade change is less than 10 percent, or a curve length of less than 100 feet when the algebraic difference of the grade change is greater than or equal to 10 percent. The centerline grade is not to exceed 20 percent in 100 feet of length.

301 - Untreated Aggregate Courses

301.03_National_2_8_2019

Add the following to Subsection 301.03:

301.03 General.

Written approval of the roadbed is required before placing aggregate.

For pit run or grid-rolled material, furnish material smaller than the maximum size, no gradation will be required otherwise. After processing on the road, remove all oversize material from the road and dispose as directed by the CO.

Provide additives or binder, if required, at the proportions specified.

Develop and use Government furnished sources according to Section 105.

If the aggregate is produced and stockpiled before placement, handle and stockpile according to Section 314.

301.05_National_2_8_2019

Delete Subsection 301.05 and replace with the following:

301.05 Compacting.

Compact each layer full width. Roll from the sides to the center, parallel to the centerline of the road. Along curbs, headers, walls, and all places not accessible to the roller, compact the material with approved tampers or compactors.

Compact the aggregate using one of the following methods as specified:

(a) **Compaction A.** Operating spreading and hauling equipment over the full width of the travelway.
(b) **Compaction B.** Operate rollers and compact as specified in Subsection 204.11(a)(1).
(c) **Compaction C.** Moisten or dry the aggregate to a uniform moisture content between 5 and 7 percent based on total dry weight of the mixture. Operate rollers and compact as specified in Subsection 204.11(a)(1).
(d) **Compaction D.** Compact to a density of at least 95 percent of the maximum density, as determined by AASHTO T 99, method C or D.
(e) **Compaction E**. Compact to a density of at least 95 per-cent of the maximum density, as determined by AASHTO T 180, method C or D.

For all compaction methods, blade the surface of each layer during the compaction operations to remove irregularities and produce a smooth, even surface. When a density requirement is specified, determine the in place density and moisture content according to AASHTO T 310 or other approved test procedures.

302 - Minor Crushed Aggregate

302.04_National_2_8_2019

Add the following to Subsection 302.04 and 302.04(a)

302.04 Placing Crushed Aggregate.

Written approval of the surface is required before placing aggregate.

(a) Roadway aggregate.
For pit run or grid-rolled material, furnish material smaller than the maximum size, no gradation will be required otherwise. After processing on the road, remove all oversize material from the road and dispose as directed by the CO.

303 - Road Reconditioning

303.07_National_2_8_2019

Add the following to Subsection 303.07:

303.07 Roadway Reconditioning.

Remove cattleguard decks. Clean the deck and the area beneath the cattleguard of soil and other material to the bottom of the original foundation over the entire width of the installation. Dispose of waste at designated sites or according to Subsection 204.14. Reinstall the cattleguard deck.

602 - Culverts and Drains

602.05_National_2_8_2019

Add the following to Subsection 602.05:

602.05 Laying Metal Pipe.

(c) Standard Connecting bands. Band corrugation shall match that of the pipe sections being joined or the annular rerolled ends of those pipe sections.

625 - Turf Establishment

625.00_National_2_8_2019

Delete Section 625 in its entirety and replace with the following:

Section 625. — Turf Establishment

Description

625.01 This work consists of soil preparation, watering, fertilizing, seeding, and mulching. Seeding and mulching methods are designated as dry or hydraulic.

Material

625.02 Conform to the following Subsections:

Agricultural limestone	713.02
Fertilizer	713.03
Mulch	713.05
Seed	713.04
Tackifiers	713.11
Water	725.01(b)

Construction Requirements

625.03 General. Apply turf establishment to prepared ground or any disturbed area between **September 1** and **June 15.** When directed by plans apply turf establishment to the disturbed areas within **14** days after completion of ground disturbing activities.

Seeded areas damaged by construction activities shall be reseeded within 10 days of the damage. Do not seed during windy weather or when the ground is excessively wet, frozen, or snow covered.

Assure that all seed and mulch used in the work conforms to the weed free requirements of Section 713.

625.04 Preparing Seedbed. Ensure that the surface soil is in a roughened condition favorable for germination and growth.

625.05 Watering. Maintain moisture as follows:

Moisten seeding areas before seeding and maintain the moisture until turf is established or until final acceptance.

625.06 Fertilizing. Apply fertilizer by the following methods:

(a) Dry Method. Apply the fertilizer with approved mechanical equipment. Hand operated methods are satisfactory on areas inaccessible to mechanical equipment.

(b) Hydraulic Method. Use hydraulic-type equipment capable of providing a uniform application using water as the carrying agent. Add fertilizer to the slurry and mix before adding seed. Add the tracer material when designated by the CO.

625.07 Seeding. Apply seed by the following methods:

(a) Dry Method. Apply the seed with approved power driven seeders, drills, or other mechanical equipment. Hand-operated seeding methods are satisfactory on areas inaccessible to mechanical equipment; or

(b) Hydraulic Method. Use hydraulic-type equipment capable of providing a uniform application using water as the carrying agent. Add a tracer material consisting of either wood or grass cellulose fiber mulch to the water. Apply the tracer material at a rate of 400 pounds per acre (450 kilograms per hectare) to provide visible evidence of uniform application. Add the seed to the water slurry no more than 30 minutes before application. Seed by hand areas inaccessible to seeding equipment.

Government Source Seed. Apply the following kinds and amounts of pure live seed:

	Type of Seed	Quantity of Pure Live Seed (Lbs/Acre)
1.	**Mountain Brome (BIOTYPE- Reecer Crk)**	**8.50**
2.	**Yarrow (BIOTYPE Wenatchee)**	**0.25**
3.	**Blue Wildrye (BIOTYPE- Sinlahekin)**	**6.00**
4.	**Idaho fescue (BIOTYPE- Chelan)**	**2.50**
5.		
6.		
7.		
	Total	**17.25 Lbs/Acre**

Determine the pounds of seed to be furnished per acre by dividing the pounds of pure live seed required per acre by the product of the percent purity and percent germination.

625.08 Mulching. Apply Mulch within **24** hours after seeding by the following methods.

(a) Dry Method. Apply mulch with a hand spreader or a spreader utilizing forced air at a rate of **NA** pounds per acre. Anchor the mulch with an approved stabilizing emulsion tackifier at a rate of **NA** gallons per acre. Do not mark or deface structure, pavements, utilities, or plant growth with tackifier.

(b) Hydraulic Method. Apply mulch in a separate application from the seed using hydraulic-type equipment according to Subsection 625.07(b).

Apply wood fiber or grass straw cellulose fiber mulch at a rate of **NA** pounds per acre.

Apply bonded fiber matrix hydraulic mulch at a minimum rate of **NA** pounds per acre.

Apply so no hole in the matrix is greater than 0.04 inches. Apply so that no gaps exist between the matrix and the soil.

Apply mulch uniformly over the entire disturbed area. Mulch by hand areas inaccessible to mulching equipment.

625.09 Protecting and Caring for Seeded Areas. Protect and care for seeded areas including watering according to 625.05. Repair or apply supplemental applications of seed, mulch, fertilizer, and water according to 625.05 as many times as needed until turf is established or final acceptance.

625.10 Acceptance. Material for turf establishment will be evaluated under Subsections 106.02 and 106.03.

Placing of turf establishment will be evaluated under Subsections 106.02 and 106.04.

Measurement

625.11 Measure the Section 625 pay items listed in the bid schedule according to Subsection 109.02 and the following as applicable:

When measuring turf establishment and supplemental applications by the acre (hectare), measure on the ground surface.

When measuring water by volume or mass, measure in the hauling vehicle or by metering.

Payment

625.12 The accepted quantities will be paid at the contract price per unit of measurement for the Section 625 pay items listed in the bid schedule. Payment will be full compensation for the work prescribed in this Section. See Subsection 109.05.

703 - Aggregate

703.05_National_2_8_2019

Delete Subsection 703.05(c)(3) and replace with the following:

703.05 (c) Surface course aggregate. (3) Plastic Index

(3) Plastic Index, AASHTO T 90

If the percent passing the No. 200 sieve is less than 12%	2 to 9
If the percent passing the No. 200 sieve is greater than 12%	Less than 2

703.05_National_2_8_2019

Delete 703.05 and replace with the following:

703.05 Subbase, Base, Surface Course, and Screened Aggregate.

(a) Subbase or base aggregate. Furnish hard, durable particles or fragments of crushed stone, crushed slag, or crushed gravel conforming the following:

(1) Gradation	Table 703-2
(2) Liquid limit, AASHTO T 89	25 max.
(3) Plastic limit, AASHTO T 90	Nonplastic
(4) Los Angeles abrasion, AASHTO T 96	40% max.
(5) Sodium sulfate soundness loss (5 cycles), AASHTO T 104	12% max.
(6) Durability index (coarse), AASHTO T 210	35 min.
(7) Durability index (fine), AASHTO T 210	35 min.
(8) Fractured faces, ASTM D 5821	50% min.
(9) Free from organic matter and lumps or balls of clay	

Do not use material that breaks up when alternately frozen and thawed or wetted and dried.

Obtain the aggregate gradation by crushing, screening, and blending processes as necessary. Fine aggregate, material passing the No. 4 sieve, shall consist of natural or crushed sand and fine mineral particles.

(b) Surface course aggregate. Furnish hard, durable particles or fragments of crushed stone, crushed slag, or crushed gravel conforming the following:

(1) Gradation	Table 703-3
(2) Liquid limit, AASHTO T 89	35 max.
(3) Plastic Index, AASHTO T 90	
a) If the percent passing the No. 200 sieve is less than 12%	2 to 9
b) If the percent passing the No. 200 sieve is greater than 12%	Less than 2
(4) Los Angeles abrasion, AASHTO T 96	40% max.
(5) Sodium sulfate soundness loss (5 cycles),	12% max.

AASHTO T 104	
(6) Durability index (coarse), AASHTO T 210	35 min.
(7) Durability index (fine), AASHTO T 210	35 min.
(8) Fractured faces, ASTM D 5821	75% min.
(9) Free from organic matter and lumps or balls of clay	

Do not use material that breaks up when alternately frozen and thawed or wetted and dried.

Do not furnish material that contains asbestos fibers.

Obtain the aggregate gradation by crushing, screening, and blending processes as necessary. Fine aggregate, material passing the No. 4 sieve, shall consist of natural or crushed sand and fine mineral particles.

(c) Screened aggregate – Furnish hard, durable particles or fragments of stone, slag, or gravel conforming the following:

(1) Gradation	Table 703-16
(2) Plastic Index, AASHTO T 90	Less than 9
(3) Los Angeles abrasion, AASHTO T 96	55% max.
(4) Free from organic matter and lumps or balls of clay.	

Do not use material that breaks up when alternately frozen and thawed or wetted and dried.

Obtain the aggregate gradation by crushing, screening, and blending processes as necessary.

Delete Table 703-2 and replace with the following:

Table 703-2
Target Value Ranges for Subbase and Base Gradation

Sieve Size	Percent by Mass Passing Designated Sieve (AASHTO T 27 and T 11)				
	Grading Designation				
	A (Subbase)	B (Subbase)	C (Base)	D (Base)	E (Base)
2½ inch	100				
2 inch	97 – 100	100	100		
1½ inch		97 – 100			
1 inch	65 – 79 (6)		80 – 100 (6)	100	
3/4 inch			64 – 94 (6)	86 – 100 (6)	100
1/2 inch	45 – 59 (7)				
3/8 inch			40 – 69 (6)	51 – 82 (6)	62 – 90 (6)
No. 4	28 – 42 (6)	40 – 60 (8)	31 – 54 (6)	36 – 64 (6)	36 – 74 (6)
No. 40	9 – 17 (4)			12 – 26 (4)	12 – 26 (4)
No. 200	4.0 – 8.0 (3)	4.0 – 12.0 (4)	4.0 –7.0 (3)	4.0 – 7.0 (3)	4.0 – 7.0 (3)

( ) The value in the parentheses is the allowable deviation (±) from the target values..

Delete Table 703-3 and replace with the following:

Table 703-3
Target Value Ranges for Surface Gradation

Sieve Size	Percent by Mass Passing Designated Sieve (AASHTO T 27 and T 11)					
	Grading Designation					
	F	G	H	S	T	U
1 1/2 inch	100			100		
1 inch	97-100	100		72 – 92 (6)	100	
3/4 inch	76-89 (6)	97 - 100	97 - 100			100
1/2 inch					71 – 91 (6)	
3/8 inch	56-68 (6)	70 – 80 (6)	80 – 92 (6)	51 – 71 (6)		71 – 90 (6)
No. 4	43-53 (7)	51 – 63 (7)	58 – 70 (7)	36 – 53 (7)	43 – 60 (7)	50 – 68 (7)
No. 8				26 – 40 (6)	30 – 46 (6)	34 – 51 (6)
No. 16	23-32 (6)	28 – 39 (6)	28 – 40 (6)			
No. 40	15-23 (5)	19 – 27 (5)	16 – 26 (5)	14 – 25 (5)	16 – 28 (5)	19 – 30 (5)
No. 200	10.0-16.0 (4)	10.0 – 16.0 (4)	9.0 – 14.0 (4)	8.0 – 15.0 (4)	8.0 – 15.0 (4)	8.0 – 15.0 (4)

( ) The value in the parentheses is the allowable deviation (±) from the target values.
If the plasticity index (PI) is greater than 0, the TV range for the No. 200 sieve size is 8-12 (4).

Add Table 703-13:

Table 703-13
Gradation Requirements for Screened Aggregate

Sieve Size	Percent by Mass Passing Designated Sieve (AASHTO T 27 and T 11)						
	Grading Designation						
	L	M	N	O	P	Q	R
6 inch	100	100					
4 inch			100	100			
3 inch					100	100	
2 inch							100
No. 4		15-45		15-45		15-45	

703.09_National_2_8_2019

Make the following changes to Subsection 703.09:

703.09 Chip Seal Aggregate.

Delete Subsection 703.09(c) and replace with the following:

(c) Flakiness Index, FLH T 508 30% max.

Add the following to Subsection 703.09:

(g) Adherent coating on the aggregate, FLH T 512 0.5% max.

705 - Rock

705.02_National_2_8_2019

Add the following Class to Table 705-1 in Subsection 705.02:

705.02 Riprap. Table 705-1.

Table 705-1
Gradation Requirements for Riprap(1)

Class	% of Rock Equal or Smaller by Count, DX	Range of Intermediate Dimensions,(2) inches (millimeters)	Range of Rock Mass,(3) pounds (kilograms)
0	100	6 – 8 (150 –200)	17 – 41 (8 – 19)
	85	5 – 6 (150 – 150)	10 – 17 (5 – 8)
	50	2 – 5 (50 – 125)	0.6 – 10 (0.3 – 5)
	15	0 – 2 (0 – 50)	0 – 0.6 (0 – 0.3)

705.08_National_2_8_2019

Add Subsection 705.08:

705.08 Streambed Simulation Rock.

(a) Simulation Material. Furnish a mixture of soil, gravel, cobble, and boulders to simulate a natural streambed. The cobbles and boulders should be hard, durable rock that conforms to test values in 705.02.

Table 705-4
Gradation requirements for Streambed Simulation Material (inches or sieve size)

Bed Class	100% passing	84% passing	50% passing	16% passing	10% passing
2	5	2	3/4	1/4	No. 10
4	10	4	1 3/4	1/2	No. 10
6	14	6	2 1/2	3/4	No. 10
8	22	8	3	1	No. 10
10	24	10	4	1	No. 10
12	30	12	5	1 1/2	No. 10
14	36	14	6	1 3/4	No. 10
16	42	16	7	2	No. 10
20	48	20	8	3	No. 10
24	60	24	10	3	No. 10
36	72	36	14	4	No. 10
48	96	48	18	6	No. 10

(b) Streambed Channel Rock. Furnish hard durable rock that is resistant to weathering and water action, free of organic or other unsuitable material, similar in color to those in the area, and at least as angular as that found in the natural stream channel. Do not use shale, rock with shale seams, or

other fissile or fissured rock that may break into smaller pieces in the process of handling and placing. Conform to test values in 705.02.

Table 705-5
Gradation Requirement for Channel Rock (CR)

Class	Mass (Pounds)	Approximate Cubic Dimension (inches)
CR - 0	12 - 90	6 - 12
CR - 1	90 - 300	12 - 18
CR - 2	300 - 700	18 - 24
CR - 3	700 - 1350	24 - 30
CR - 4	1350 - 2400	30 - 36
CR - 5	2400 - 3700	36 - 42
CR - 6	3700 - 5500	42 - 48
CR - 7	5500 - 7900	48 - 54
CR - 8	7900 - 10800	54 - 60
Note: Mass / Pounds of channel is based on a sphere of the approximate cubic dimensions composed of granite. Mass will vary with rock type. Inspection should be performed by using the cube root of the A axis * B axis * C axis of each piece.		

SHEET INDEX	PROJECT: PROJECT NUMBER
	DATE: APRIL 27, 2023

U.S. DEPARTMENT OF AGRICULTURE
FOREST SERVICE
REGION SIX

CONSTRUCTION PLANS FSR 3005200 & 3005220

COX MEADOW ACCESS ROAD RECONDITION

COLVILLE NATIONAL FOREST
TONASKET RANGER DISTRICT
OKANOGAN COUNTY

PROJECT LOCATION

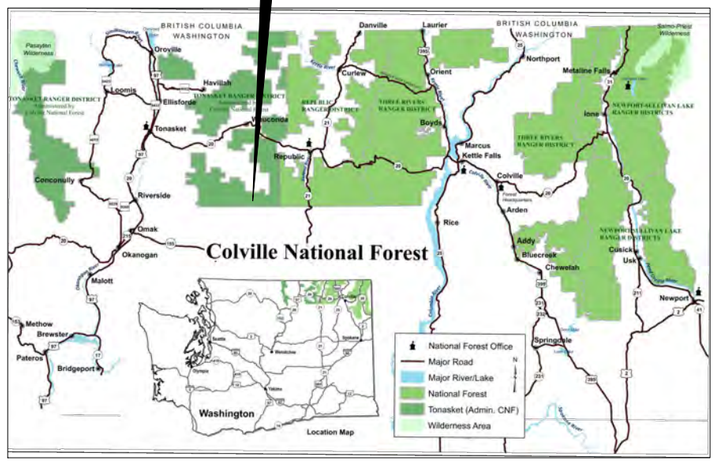

LOCATION MAP
NOT TO SCALE

SHEET INDEX

Sheet Page	Sheet Title
1	PROJECT TITLE SHEET
2	PROJECT VICINITY MAP
3	BASE - SUMMARY OF QUANTITIES
4	BASE ITEM WORK LIST
5	OPTIONS - SUMMARY OF QUANTITIES
6	OPTION ITEM WORK LIST
7	PROJECT GENERAL NOTES
8	TYPICAL ROADWAY SECTIONS
9	ROADWAY CLEARING LIMIT DETAIL
10	DRIVEABLE DRAIN DIP
11	CHECK DAM DETAIL
12	TYPE II GATE DETAIL (INFORMATIONAL)
13	OPTION 1 CULVERT LIST
14	CULVERT INSTALLATION TYPE 3 - CATCH BASIN
15	CATCH BASIN DETAIL
16	COX ACCESS ROAD CONDITIONS PICTURES

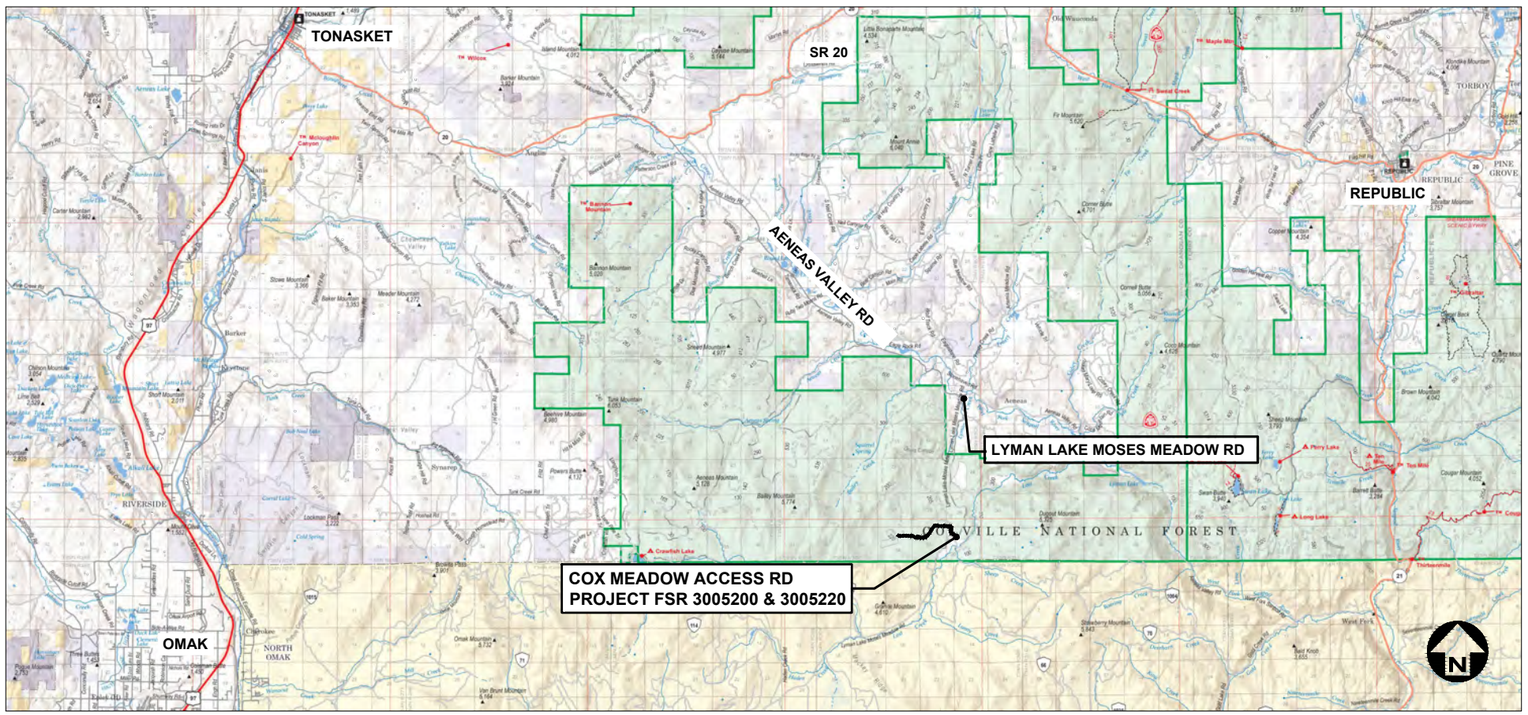

AREA MAP
NOT TO SCALE

PREPARED BY:

_____ DATE _____
PROJECT ENGINEER

TECHNICAL APPROVAL:

_____ DATE _____
FOREST ENGINEER

PROJECT APPROVAL:

_____ DATE _____
DISTRICT RANGER

NO.	REVISION DESCRIPTION	BY	DATE
△			
△			
△			
△			
△			
△			

SET NO.

SHEET NO.
1

C:\Users\michaelmelvin\1 AUTOCAD\Cox Meadow CAD\TO 2025_2_7 Cox Meadow Plan.dwg

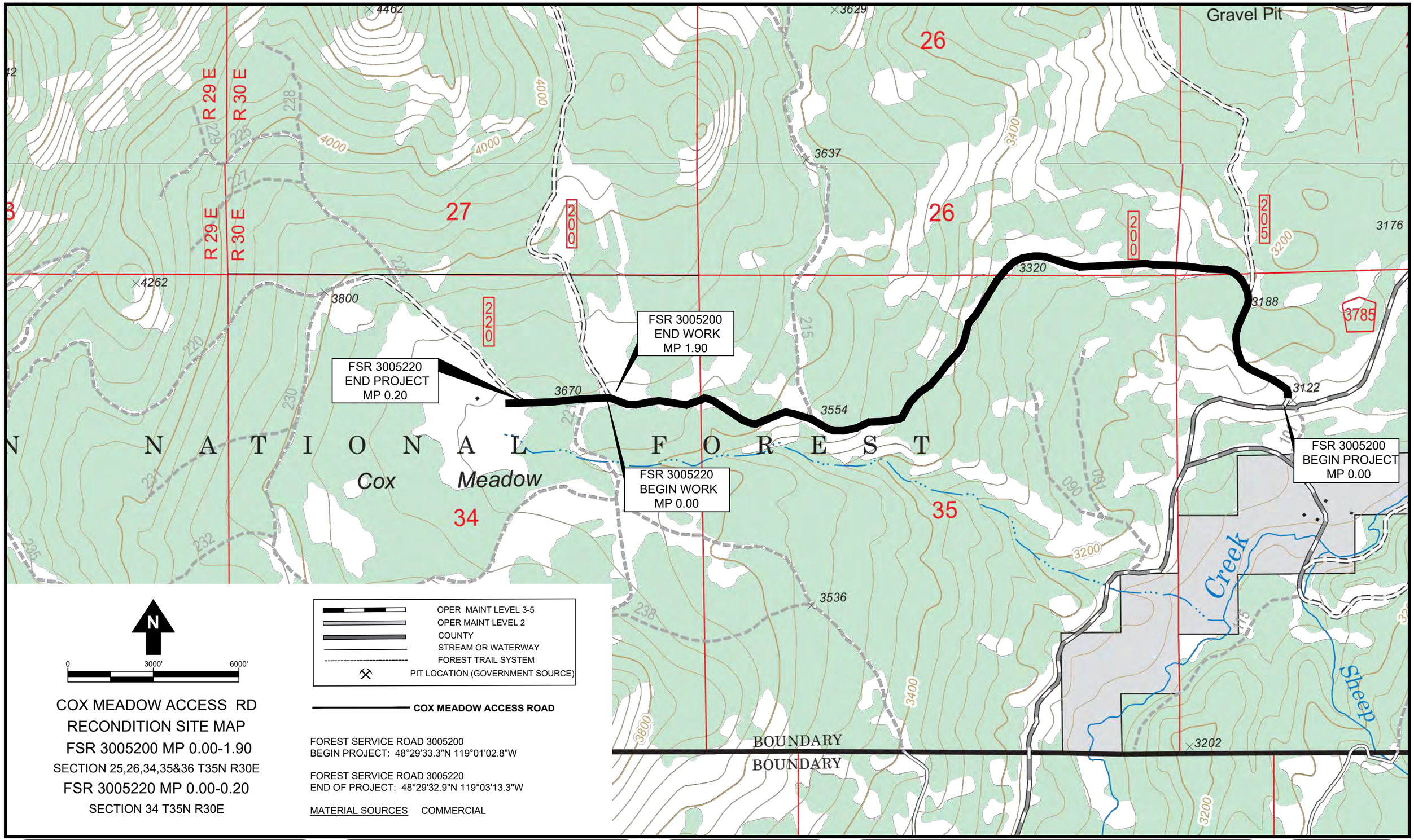

COX MEADOW ACCESS RD
RECONDITION SITE MAP
FSR 3005200 MP 0.00-1.90
SECTION 25,26,34,35&36 T35N R30E
FSR 3005220 MP 0.00-0.20
SECTION 34 T35N R30E

FOREST SERVICE ROAD 3005200
BEGIN PROJECT: 48°29'33.3"N 119°01'02.8"W

FOREST SERVICE ROAD 3005220
END OF PROJECT: 48°29'32.9"N 119°03'13.3"W

MATERIAL SOURCES COMMERCIAL

COLVILLE NATIONAL FOREST
TONASKET RANGER DISTRICT

REVISIONS		
REV.	DESCRIPTION	DATE

DESIGNED BY: M MELVIN
CHECKED BY: PLAN REVIEW

VICINITY MAP
COX MEADOW ACCESS RD RECONDITION

SHEET 2 OF 16

BASE ITEM ESTIMATE OF QUANTITIES

BASE Cox Meadow Access Road Recondition		FSR 3005200 MP 0.0-1.9 &			FSR 3005220 MP 0.0-0.2		
Item Number	**Description**	**Method***	**Unit**	**3005200 Quantity**	**3005220 Quantitiy**	**Cox Meadow Rd Total Quantity**	**Remarks**
15101	Mobilization	*LSQ*	LS	ALL	ALL	ALL	
15219	Establish Clearing Limits	*CQ*	MILE	1.9	0.2	2.10	
15708A	Check Dams - Soil/Rock	*AQ*	EACH	116	0	116	Construct soil/rock dams from roadway recondition excess material & oversize rock. If additional check dam material is required borrow from adjacent cut slope. MP 0.04-0.16; 16 - Soil/Rock Check Dams @ 40 ft spacing. MP 0.50-1.45; 100 - Soil/Rock Check Dams @ 50 ft spacing.
15708B	Check Dams - Watte 9" Diamerter	*AQ*	EACH	28	0	28	Construct wattle check dams MP 0.30-0.45; 12 - Wattle Check Dams @ 75 ft spacing. MP 1.45-1.65; 16 - Wattle Check Dams @ 75 ft spacing
15713	Soil Erosion and Pollution Control	*LSQ*	LS	ALL	ALL	ALL	Project erosion & sediment control shall be applied per contractor's site specific stormwater plan. At minimum: Wattle or straw bales shall be placed immediately upstream of soil/rock check dams following completion of roadway recondition work. Other erosion & sediment control BMP's will be applied as required until permanent seeding becomes established.
20103	Clearing and Grubbing, Disposal Method 203.05 (f)	*CQ*	MILE	1.9	0.2	2.10	Clearing Limit: Clear per Section 201.04. Healthy tree(s) greater than 7' diameter DBH shall remain. Grubbing Limit: Remove all moss, grass, turf, brush, trees, and any other organic, vegatative, deleterious debris. Stockpile clear and grub materials to include topsoil outside and adjacent to clearing limit. Upon completion of roadway reconditioning work replace topsoil, scatter larger woody debris, and slash across disturbed cut or fill areas. Designated Disposal method 203.05 (f).
20424	Drainage Excavation, Leadout Ditch	*CQ*	LF	70	0	70	MP 0.35 Right; Construct Leadout Ditch 35 LF length. MP 1.55 Left; Construct Leadout Ditch 35 LF length.
20425	Drainage Excavation, Type Drain Dip	*AQ*	EACH	2	0	2	Construct driveable drain dip to drain to ditch, leadout ditch or natural drainage. MP 0.3 Right Construct Driveable Drain Dip across FSR 3005205 road approach. MP 1.9 3005200 Intersection 3005220 Left. Construct Driveable Drain Dip across 3005200 road departing intersection.
30315	Roadway Reconditioning, Compaction Method 204.11 (a)(1)	*CQ*	MILE	1.9	0.2	2.10	Roadway Reconditioning: Scarify roadbed surface to depth sufficient to remove erosion gullies and irregularties. Remove oversized material. Repair soft and unstable areas. Shape roadbed to uniform surface. Finish surface to required line, grade, and cross-section then compact per 204.11(a). Out sloped road segments shall direct runoff to ditch cut or daylight roadbed to top of fill slope. No berm shall be left at top of fill slope to capture and redirect runoff down roadbed. Existing ditch depth varies. Reconditioned ditch shall be constructed at 2:1 inslope and 2:1 backslope with depth depth of 2.5 feet, unless specified otherwise in plans. Reshape ditch, catch basins and culvert inlets to achieve positive drainage, uniform ditch width, depth, and grade. Remove sediment, vegetation, and other debris from catch basins and culvert inlets.
61907	Remove and Reset Gate	*AQ*	EACH	1	0	1	MP 0.04 Remove gate. MP 0.05 Reset gate. Final gate placment & construction should prevent any bypass of gate on right or left by motor vehicle.
62201	Equipment Rental, Hydraulic Excavator W/ Thumb	*AQ*	HOUR	7	1	8	Forest Service field directed work.
62504	Seeding, Dry Method - Government Source	*CQ*	ACRE	4.61	0.48	5.09	Seeding Window September 1 through June 15. Seed all areas disturbed by work. Moisten disturbed areas before seeding.

BASE ITEM WORK LIST SUMMARY

BASE - Cox Meadow Road Recondition						
ROAD #	**ROAD NAME**	**MP**	**DIR**	**PAY ITEM**	**QUANTITY**	**WORK ITEM**
3005200	COX MEADOW ACCESS	0.00	BOTH	NA	-	Begin Project Intersection Lyman Lake Moses Meadow Rd & Cox Meadow Access Rd (3005200 MP 0.0)
3005200	COX MEADOW ACCESS	0.00	BOTH	15219	1.9 MI	Begin Establish Clearing Limits
3005200	COX MEADOW ACCESS	0.00	BOTH	20103	1.9 MI	Begin Clearing and Grubbing
3005200	COX MEADOW ACCESS	0.00	BOTH	30315	1.9 MI	Begin Roadway Recondition. Finished Roadbed 14' Width
3005200	COX MEADOW ACCESS	0.00	BOTH	62504	4.61 AC	Begin Permanent Seeding
3005200	COX MEADOW ACCESS	0.04	BOTH	61907	1 EA	Remove gate. Reset gate MP 0.05
3005200	COX MEADOW ACCESS	0.04	RIGHT	15708A	16 EA	Construct 16 Soil/Rock Check Dams @ 40 ft spacing. MP 0.04 - 0.16 Right
3005200	COX MEADOW ACCESS	0.30	RIGHT	20425	1 EA	Construct Driveable Drain Dip across FSR 3005205 road approach.
3005200	COX MEADOW ACCESS	0.30	RIGHT	15708B	12 EA	Construct 12 Wattle Check Dams @ 75 ft spacing MP 0.30 - 0.45 Right
3005200	COX MEADOW ACCESS	0.35	RIGHT	20424	35 LF	Construct Leadout Ditch
3005200	COX MEADOW ACCESS	0.50	RIGHT	15708A	100 EA	Construct 100 Soil/Rock Check Dams @ 50 ft spacing. MP 0.50 - 1.45 Right
3005200	COX MEADOW ACCESS	1.45	RIGHT	15708B	12 EA	Construct 12 Wattle Check Dams @ 75 ft spacing. MP 1.45 - 1.65 Right
3005200	COX MEADOW ACCESS	1.55	LEFT	20424	35 LF	Construct Leadout Ditch
3005200	COX MEADOW ACCESS	1.88	RIGHT	20425	1 EA	3005200 Intersection 3005220 Left. Construct Driveable Drain Dip across 3005200 road departing intersection.
3005200	COX MEADOW ACCESS	1.90	BOTH	15219	-	End Establish Clearing Limits
3005200	COX MEADOW ACCESS	1.90	BOTH	20103	-	End Clearing and Grubbing
3005200	COX MEADOW ACCESS	1.90	BOTH	30315	-	End Roadway Recondition. Finished Roadbed 14' Width
3005200	COX MEADOW ACCESS	1.90	BOTH	62504	-	End Permanent Seeding (3005200 MP 1.90)
3005220	COX MEADOW ACCESS	0.00	BOTH	15219	0.2 MI	Begin Establish Clearing Limits
3005220	COX MEADOW ACCESS	0.00	BOTH	20103	0.2 MI	Begin Clearing and Grubbing
3005220	COX MEADOW ACCESS	0.00	BOTH	30315	0.2 MI	Begin Roadway Recondition. Finished Roadbed 14' Width
3005220	COX MEADOW ACCESS	0.00	BOTH	62504	0.48 AC	Begin Permanent Seeding
3005220	COX MEADOW ACCESS	0.20	BOTH	15219	-	End Establish Clearing Limits
3005220	COX MEADOW ACCESS	0.20	BOTH	20103	-	End Clearing and Grubbing
3005220	COX MEADOW ACCESS	0.20	BOTH	30315	-	End Roadway Recondition. Finished Roadbed 14' Width
3005220	COX MEADOW ACCESS	0.20	BOTH	62504	-	End Permanent Seeding
3005220	COX MEADOW ACCESS	0.20	BOTH	NA	-	End Project at turnaround for Cox Meadow (3005220 MP 0.2)
BASE - Cox Meadow Road Recondition END WORK LIST						

OPTION ITEM ESTIMATE OF QUANTITIES

Option 1 Cox Meadow Access Rd - Culverts		FSR 3005200 MP 0.0-1.9					
Item Number	**Description**	**Method***	**Unit**	**3005200 Quantity**	**3005220 Quantitiy**	**Cox Meadow Rd Total Quantity**	**Remarks**
20302	Removal of Culverts, Disposal Method 203.05 (a)	*AQ*	EACH	2.00	0.00	2.00	MP 0.45 & MP 1.20; Remove 15" diameter pipe and dispose off site.
60201	24-Inch Pipe Culvert, Corrugated Steel, 16-Gage, Compaction Method 204.11 (f)	*AQ*	LF	70.00	0.00	70.00	MP 0.45 & MP 1.20; Construct catch basin, Install 24" diameter CMP culvert. Culvert outlet invert shall be at toe of fill.

Option 2 Cox Meadow Access Rd - Aggregate		FSR 3005200 MP 0.0-1.9 &			FSR 3005220 MP 0.0-0.2		
Item Number	**Description**	**Method***	**Unit**	**3005200 Quantity**	**3005220 Quantitiy**	**Cox Meadow Rd Total Quantity**	**Remarks**
30101	Aggregate Surface Course, Compaction Method 204.11 (a)(1) - Commercial Source	*CQ*	CY	1472	155	1,627	Commercial Source Certified Weed Free by Forest Service. SEE SURFACE AGGREGATE GRADING DESIGNATION FOR PROJECT UNDER GENERAL NOTES. Written approval of roadbed is required prior to aggregate placement. All roadway cuts, slopes, subgrade, drainage features, culverts, riprap, and any underground minor structure work items shall be complete before placing aggregate course. Finished width 12 ft, compacted depth 4 inches.

OPTION ITEM WORK LIST SUMMARY

OPTION 1 Cox Meadow Road Recondition

ROAD #	ROAD NAME	MP	DIR	PAY ITEM	QUANTITY	WORK ITEM
3005200	COX MEADOW ACCESS	0.45	BOTH	20302	1 EA	Remove 15" Diam Culvert & Dispose 203.05 (a) (3)
3005200	COX MEADOW ACCESS	0.45	RIGHT	60201	35 LF	Install 24" Diam Culvert with Catch Basin
3005200	COX MEADOW ACCESS	1.20	BOTH	20302	1 EA	Remove 15" Diam Culvert & Dispose 203.05 (a) (7)
3005200	COX MEADOW ACCESS	1.20	RIGHT	60201	35 LF	Install 24" Diam Culvert with Catch Basin

OPTION 2 Cox Meadow Road Recondition

ROAD #	ROAD NAME	MP	DIR	PAY ITEM	QUANTITY	WORK ITEM
3005200	COX MEADOW ACCESS	0.00	BOTH	30207	1485 CY	Begin Aggregate Surface Course, Compaction Method 204.11 (a)(1), 12' width 4" depth.
3005200	COX MEADOW ACCESS	1.90	BOTH	30207	-	End Aggregate Surface Course, Compaction Method 204.11 (a)(1), 12' width 4" depth.
3005220	COX MEADOW ACCESS	0.00	BOTH	30207	155 CY	Begin Aggregate Surface Course, Compaction Method 204.11 (a)(1), 12' width 4" depth.
3005220	COX MEADOW ACCESS	0.20	BOTH	30207	-	End Aggregate Surface Course, Compaction Method 204.11 (a)(1), 12' width 4" depth.

OPTION ITEM END WORK LIST

GENERAL NOTES

CONSTRUCT PROJECT IN COMPLIANCE WITH FEDERAL HIGHWAY ADMINISTRATION STANDARD SPECIFICATIONS FOR CONSTRUCTION OF ROAD AND BRIDGES ON FEDERAL HIGHWAY PROJECTS (FP-14) AND APPLICABLE FOREST SERVICE SUPPLEMENTAL SPECIFICATIONS (FSSS).

1. SUBMIT QUALITY CONTROL PLAN FOR CO APPROVAL 14-DAYS PRIOR TO START OF WORK. SECTION 153..03
2. SUBMIT TRAFFIC CONTROL PLAN FOR CO APPROVAL 30-DAYS PRIOR TO START OF CONSTRUCTION. FSSS 156.
3. SUBMIT **PROJECT SPECIFIC** SOIL EROSION & SEDIMENT CONTROL PLAN FOR CO APPROVAL 30-DAYS PRIOR TO START OF CONSTRUCTION. FSSS 157.04

CONSTRUCTION NOTES

SECTION 201: CLEARING & GRUBBING OPERATION: CLEARING & GRUBBING LIMIT IS ESTABLISHED PER PLAN MEASURED HORIZONTALLY FROM EDGE OF SHOULDER. **NO HEALTHY TREE GREATER THAN 7" IN DIAMETER DBH SHALL BE REMOVED FROM CLEARING LIMIT.** RETAIN DUFF, GRASS AND GROUND COVER ON FILL SLOPES PAST ROADBED. GRUBBING LIMIT: **REMOVE MOSS, GRASS, TURF, BRUSH, TREES AND ORGANIC, DELETERIOUS, OR VEGETATIVE DEBRIS FROM WITHIN GRUBBING LIMIT.** STOCKPILE CLEAR AND GRUB TRESS, LOGS, DEADFALL, SLASH, ORGANIC MATERIAL AND TOP SOIL OUTSIDE AND ADJACENT TO CLEARING LIMIT. UPON COMPLETION OF ROADWAY RECONDITIONING WORK **DISPOSE OF CLEARING AND GRUBBING MATERIALS PER SECTION 203.05 (f) BY SCATTERING ACROSS CUTS OR FILLS DISTURBED BY PROJECT.** NO CLEAR AND GRUB DEBRIS WILL REMAIN ON ROADBED, DITCHES OR WATERWAYS.

SECTION 203.05(A): ANY MATERIAL REMOVED FROM PROJECT FOR DISPOSAL BECOMES THE CONTRACTOR'S PROPERTY. DISPOSAL OF MATERIAL IS INCIDENTAL TO PAYMENT FOR BID SCHEDULE WORK ITEM. LEGALLY RECYCLE OR DISPOSE OF MATERIAL OFF THE PROJECT. MATERIAL NOT REMOVED FROM THE PROJECT SHALL BE DISPOSED OF PER SECTION 203.05/FSSS 203.05. DESIGNATED AREAS FOR DISPOSAL SHALL BE IDENTIFIED IN THE PLANS. IF NOT IDENTIFIED IN PLANS THE DESIGNATED AREA SHALL BE APPROVED BY THE CO PRIOR TO DISPOSAL.

SECTION 203.05 (F) DESIGNATED DISPOSAL METHOD SCATTERING: SCATTER CONSTRUCTION SLASH OUTSIDE ROADBED AND DITCH. SCATTER IN DESIGNATED AREAS WITHOUT DAMAGING TREES. SCATTERED LOGS, LIMBS AND BRANCHES SHALL BE LESS THAN 7 INCHES IN DIAMETER AND 8 FEET IN LENGTH. POSITION SO THEY WILL NOT ROLL. SCATTER CONSTRUCTION SLASH AND VEGETATION FOR EVEN DISTRIBUTION ACROSS AREA TO REDUCE SLASH CONCENTRATIONS. SCATTER OR PLACE CONSTRUCTION SLASH AS FLAT AS PRACTICABLE ON THE COMPLETED SLOPE FOR EROSION CONTROL. PILES AND WINDROWS ARE NOT PERMITTED. CONTRACTOR MAY PROPOSE ALTERNATE DISPOSAL METHOD SUBJECT TO APPROVAL OF CO. PAYMENT FOR PROPOSED ALTERNATE DISPOSAL METHOD IS INCIDENTAL TO WORK ITEM.

SECTION 301: COMMERCIAL SOURCE CERTIFIED WEED FREE BY FOREST SERVICE. AGGREGATE SURFACE COURSE IS AN **OPTION ITEM** FOR THIS CONTRACT. IF OPTION ITEM ACCEPTED: ALL QUANTITIES FOR PAYMENT MEASURED BY CUBIC YARD "IN-PLACE". CONTRACTOR IS RESPONSIBLE TO PROVIDE SUFFICIENT QUANTITY TO ACCOUNT FOR SHRINK OR SWELL DURING PLACEMENT & COMPACTION. AGGREGATE SURFACE COURSE 4-INCH DEPTH OR DEPTH SHOWN ON PLANS. AGGREGATE WILL BE PLACED & COMPACTED ACCORDING TO 204.11 (A)(1).

SECTION 303.07 ROADWAY RECONDITIONING: SCARIFY SURFACE TO A MINIMUM 6-INCH DEPTH. INCREASE SCARIFICATION DEPTH > 6-INCH TO REMOVE ROADBED EROSION GULLIES OR IRREGULARITIES . REMOVE OVERSIZED ROCK/COBBLE GREATER THAN 6-INCH IN DIAMETER FROM ROADBED. SHAPE TO A UNIFORM SURFACE. REPAIR SOFT AND UNSTABLE AREAS PER SECTION 204.07. FINISH EARTH SURFACE TO WITHIN 0.05 FEET OR ROCK SURFACE TO WITHIN 0.10 FEET OF REQUIRED LINE, GRADE, AND CROSS-SECTION. ROADBED FINISHED INSLOPE OR OUTSLOPE WILL BE 4% AS SPECIFIED ON PLANS. COMPACT FINISHED > RECONDITIONED ROADBED PER SECTION 204.11(A).

RE-ESTABLISH DITCH CUT PER TYPICAL ROADWAY SECTION IN PLAN. EXISTING DITCH DEPTH VARIES. MINIMUM RECONDITIONED DITCH DEPTH SHALL BE 2.5 FEET MEASURED FROM ROADBED. DITCH SHALL BE CONSTRUCTED AT 2:1 INSLOPE AND 2:1 BACKSLOPE , UNLESS SPECIFIED OTHERWISE IN PLANS. REMOVE SEDIMENT, VEGETATION, AND OTHER DEBRIS FROM CATCH BASINS AND CULVERT INLETS. RESHAPE DITCH, CATCH BASINS AND CULVERT INLETS TO ACHIEVE POSITIVE DRAINAGE, UNIFORM DITCH WIDTH, DEPTH, AND GRADE. DITCH SHALLBE SLOPED TO DRAIN TO CULVERT, NATURAL DRAINAGE, DAYLIGHT TO FILL SLOPE OR LEADOUT DITCH.

CATCH BASIN SEDIMENT BASIN SHALL BE ESTABLISHED A MINIMUM OF 8" BELOW CULVERT INLET. **ALL CULVERTS WITHIN PROJECT LIMITS SHALL BE CLEARED AND CLEANED TO FREE FLOWING CONDITION.**

SECTION 602: CULVERT BEDDING SHALL BE PLACED FOR FULL LENGTH OF CULVERT. BEDDING MATERIAL IS INCIDENTAL TO PAYMENT 60201 CULVERT INSTALLATION . ALTERNATIVE BEDDING OR NATIVE MATERIAL MAY BE USED UPON APPROVAL BY THE CO. COMPACTION SHALL BE AS SPECIFIED IN SECTION 204.11 (F).

SECTION 625: SEED WILL BE GOVERNMENT FURNISHED SOURCE FOR THIS PROJECT. ALL AREAS OF DISTURBED EARTH OUTSIDE THE ROADBED SHALL BE "SEEDING, DRY METHOD" AS SET FORTH IN SECTION 625 AND FSSS 625. THE SEED AND/OR MULCH AREA INCLUDES SECTIONS SHOWN ON TYPICALS AND ALL OTHER AREAS DISTURBED BY CONTRACTOR. SEEDING IS NOT REQUIRED ON ROCK SLOPES TYP 1/2 :1 OR STEEPER.

Table 703-3

Target Value Ranges for Surface Gradation

Sieve Size	Percent by Mass Passing Designated Sieve (AASHTO T 27 and T 11)					
	Grade Designation					
	F	G	H	S	T	U
1½ inch	100	-	-	100	-	-
1 inch	97 – 100	100	-	72 - 92 (6)	100	-
3/4 inch	76 - 89 (6)	97 – 100	97 – 100	-	-	100
1/2 inch	-	-	-	-	71 - 91 (6)	
3/8 inch	56 – 68 (6)	70 - 80 (6)	80 – 92 (6)	51 – 71 (6)	-	71 - 90 (6)
No. 4	43 – 53 (7)	51 – 63 (7)	58 – 70 (7)	36 – 53 (7)	43 – 60 (7)	50 – 68 (7)
No. 8	-	-	-	26 – 40 (7)	30 – 46 (7)	50 – 68 (7)
No. 16	23 – 32 (6)	28 – 39 (6)	28 – 40 (6)			
No. 40	15 – 23 (5)	19 – 27 (5)	16 – 26 (5)	14 – 25 (5)	16 – 28 (5)	19 – 30 (5)
No. 200	10.0 – 16.0 (4)	10.0 – 16.0 (4)	9.0 – 14.0 (4)	8.0 – 15.0 (4)	8.0 – 15.0 (4)	8.0 – 15.0 (4)

( ) The value in the parentheses is the allowable deviation (□) from the target values.

If the plasticity index (PI) is greater than 0, the TV range for the No. 200 sieve size is 8-12 (4).

Table 703-2

Target Value Ranges for Subbase and Base Gradation

Sieve Size	Percent by Mass Passing Designated Sieve (AASHTO T 27 and T 11)				
	Grade Designation				
	A (Subbase)	B (Subbase)	C (Base)	D (Base)	E (Base)
2½ inch (63 mm)	100(1)	-	-	-	-
2 inch (50 mm)	97 – 100(1)	100(1)	100(1)	-	-
1½ inch (37.5 mm)	-	97 – 100(1)	-	-	-
1 inch (25 mm)	65 – 79 (6)	-	80 – 100 (6)	100(1)	-
3/4 inch (19 mm)	-	-	64 – 94 (6)	86 – 100 (6)	100(1)
1/2 inch (12.5 mm)	45 – 59 (7)	-	-	-	-
3/8 inch (9.5 mm)	-	-	40 – 69 (6)	51 – 82 (6)	62 – 90 (6)
No. 4 (4.75 mm)	28 – 42 (6)	40 – 60 (8)	31 – 54 (6)	36 – 64 (6)	36 – 74 (6)
No. 40 (425 µm)	9 – 17 (4)	-	-	12 – 26 (4)	12 – 26 (4)
No. 200 (75 µm)	4.0 – 8.0 (3)	4.0 – 12.0 (4)	4.0 – 7.0 (3)	4.0 – 7.0 (3)	4.0 – 7.0 (3)

(1) Statistical procedures do not apply.

( ) The value in the parentheses is the allowable deviation (±) from the target values.

COMMERCIAL SOURCE SURFACE COURSE AGGREGATE SHALL BE GRADING DESIGNATION F PER TABLE 703-3.
ALTERNATE SURFACE COURSE: GRADING DESIGNATION C BASE PER TABLE 703-2

IF SURFACE GRADING DESIGNATION F IS NOT COMMERCIALLY AVAILABLE AT COST EFFECTIVE HAUL DISTANCE TO SITE, THEN THE ALTERNATE, SURFACE COURSE AGGREGATE SHALL BE GRADING DESIGNATION C BASE PER TABLE 703-2 USED FOR PROJECT SURFACING AGGREGATE. I.E. CONTRACTOR SHOULD BID OPTION FOR SURFACING AGGREGATE AT LOWEST COST TO HAUL AND CONSTRUCT.

SURFACE COURSE SHALL CONFORM TO ALL REQUIREMENTS UNDER SECTION 703 - AGGREGATE.

Table 705-1 ABBREVIATED CLASS 0 - 4

Gradation Requirements for Riprap(1)

Class	% of Rock Equal or Smaller by Count, DX	Range of Intermediate Dimensions,(2) inches (millimeters)	Range of Rock Mass,(3) pounds (kilograms)
0	100	6 – 8 (150 –200)	17 – 41 (8 – 19)
	85	5 – 6 (150 – 150)	10 – 17 (5 – 8)
	50	2 – 5 (50 – 125)	0.6 – 10 (0.3 – 5)
	15	0 – 2 (0 – 50)	0 – 0.6 (0 – 0.3)
1	100	9 – 15 (230 – 380)	59 – 270 (27 – 120)
	85	7 – 11 (180 – 280)	28 – 110 (13 – 50)
	50	5 – 8 (130 – 200)	10 – 42 (5 – 19)
	15	3 – 6 (80 – 150)	2 – 18 (1 – 8)
2	100	15 – 21 (380 – 530)	270 – 750 (120 – 340)
	85	11 – 15 (280 – 380)	110 – 270 (50 – 120)
	50	8 – 11 (200 – 280)	42 – 110 (19 – 50)
	15	6 – 8 (130 – 200)	10 – 42 (6 – 19)
3	100	21 – 27 (530 – 690)	750 – 1600 (340 – 730)
	85	15 – 19 (380 – 480)	270 – 560 (120 – 250)
	50	11 – 14 (280 – 360)	110 – 220 (50 – 100)
	15	8 – 10 (200 – 250)	42 – 81 (19 – 37)
4	100	27 – 33 (690 – 840)	1600 – 2900 (730 – 1300)
	85	19 – 23 (480 – 580)	560 – 990 (250 – 450)
	50	14 – 17 (360 – 430)	220 – 400 (100 – 180)
	15	9 – 12 (230 – 300)	59 – 140 (27 – 64)

(1) Gradation includes spalls and rock fragments to provide a stable, dense mass.

(2) The intermediate dimension is the longest straight-line distance across the rock that is perpendicular to the rock's longest axis on the rock face with the largest projection plane.

(3) Rock mass is based on a specific gravity of 2.65 and 85 percent of the cubic volume as calculated using the intermediate dimension.

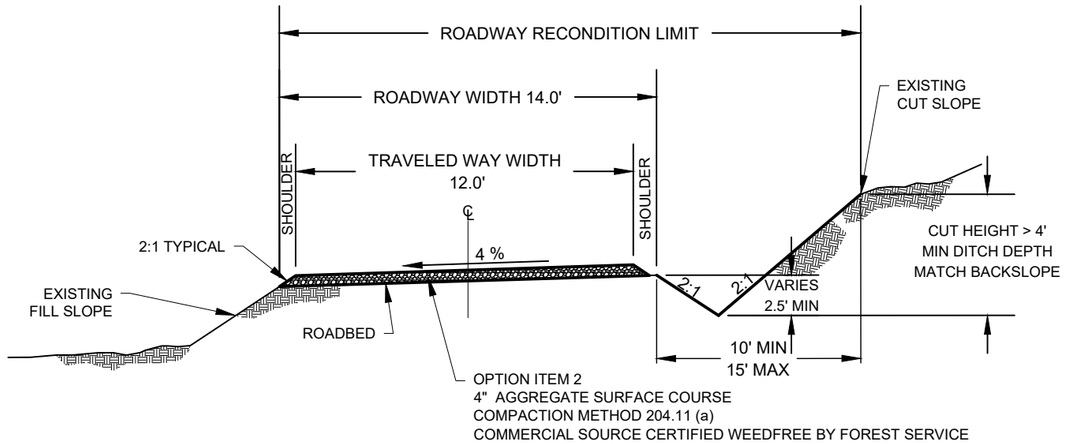

TYPICAL SECTION 1

NOT TO SCALE

FSR # 3005200 MP 0.00 TO 0.19
FSR # 3005200 MP 0.63 TO 1.07

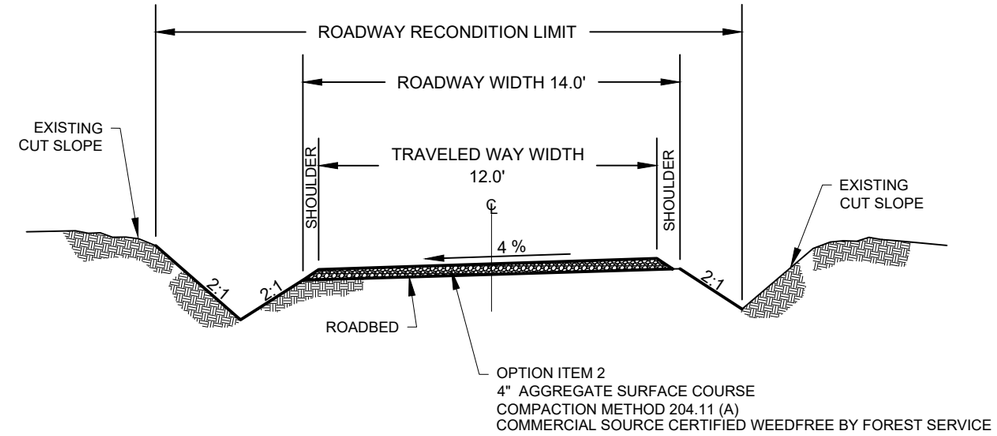

TYPICAL SECTION 2

NOT TO SCALE

FSR # 3005200 MP 0.19 TO 0.34
FSR # 3005200 MP 1.39 TO 1.55

COX MEADOW ACCESS ROAD

TRAVELED WAY WIDTH	12 FEET
ROADWAY WIDTH (INCL. SHOULDERS)[1]	14 FEET
[1] EXISTING ROADWAY WIDTH VARIES FROM	13 - 17 FEET.
ROADWAY INSLOPE/OUTSLOPE PER PLAN	4%

MATCH CURVE INSLOPE OR OUTSLPE TO ROADWAY SLOPE PER PLAN.

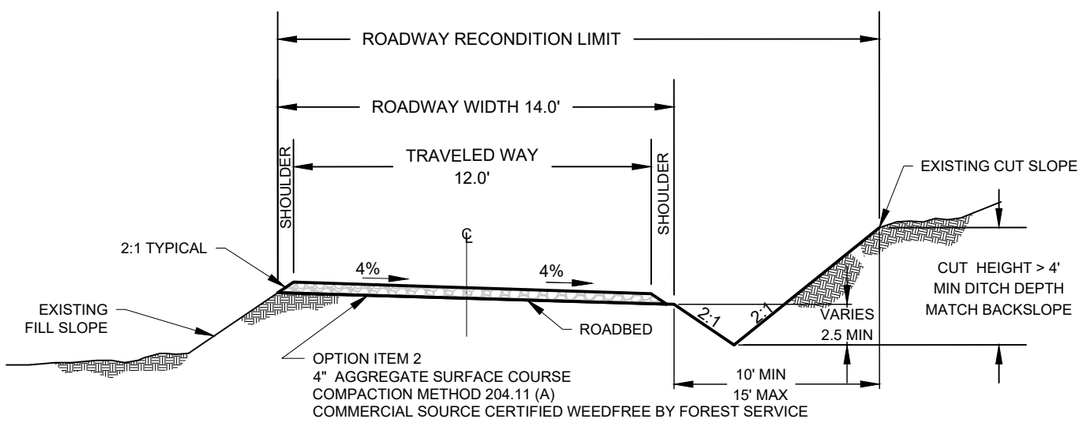

TYPICAL SECTION 3

NOT TO SCALE

FSR # 3005200 MP 0.34 TO 0.63
FSR # 3005200 MP 1.07 TO 1.39
FSR # 3005200 MP 1.55 TO 1.88
FSR # 3005220 MP 0.00 TO 0.20

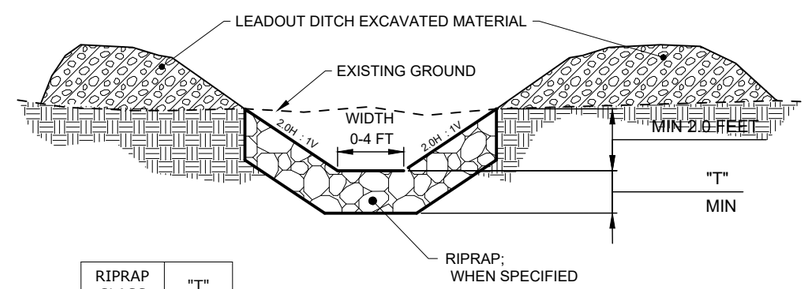

RIPRAP CLASS	"T"
0	1'-0"
1	1'-6"
2	2'-6"
3	3'-0"
4	3'-6"

LEADOUT DITCH CROSS SECTION

NOT TO SCALE

1. LEADOUT DITCH EXCAVATION SHALL BE DEPOSITED UNIFORMLY ON BOTH SIDES OF DITCH
2. V-DITCH OR FLAT-BOTTOM DITCH DEPENDING ON ROADSIDE TOPOGRAPHY
3. DITCH AND BERM SHALL BE SEEDED

ROADWAY CLEARING & GRUBBING DESIGNATED LIMIT

NOT TO SCALE

FP-14 & FSSS 201 CLEARING AND GRUBBING

DESIGNATED DISPOSAL METHOD - Section 203.05 (f)

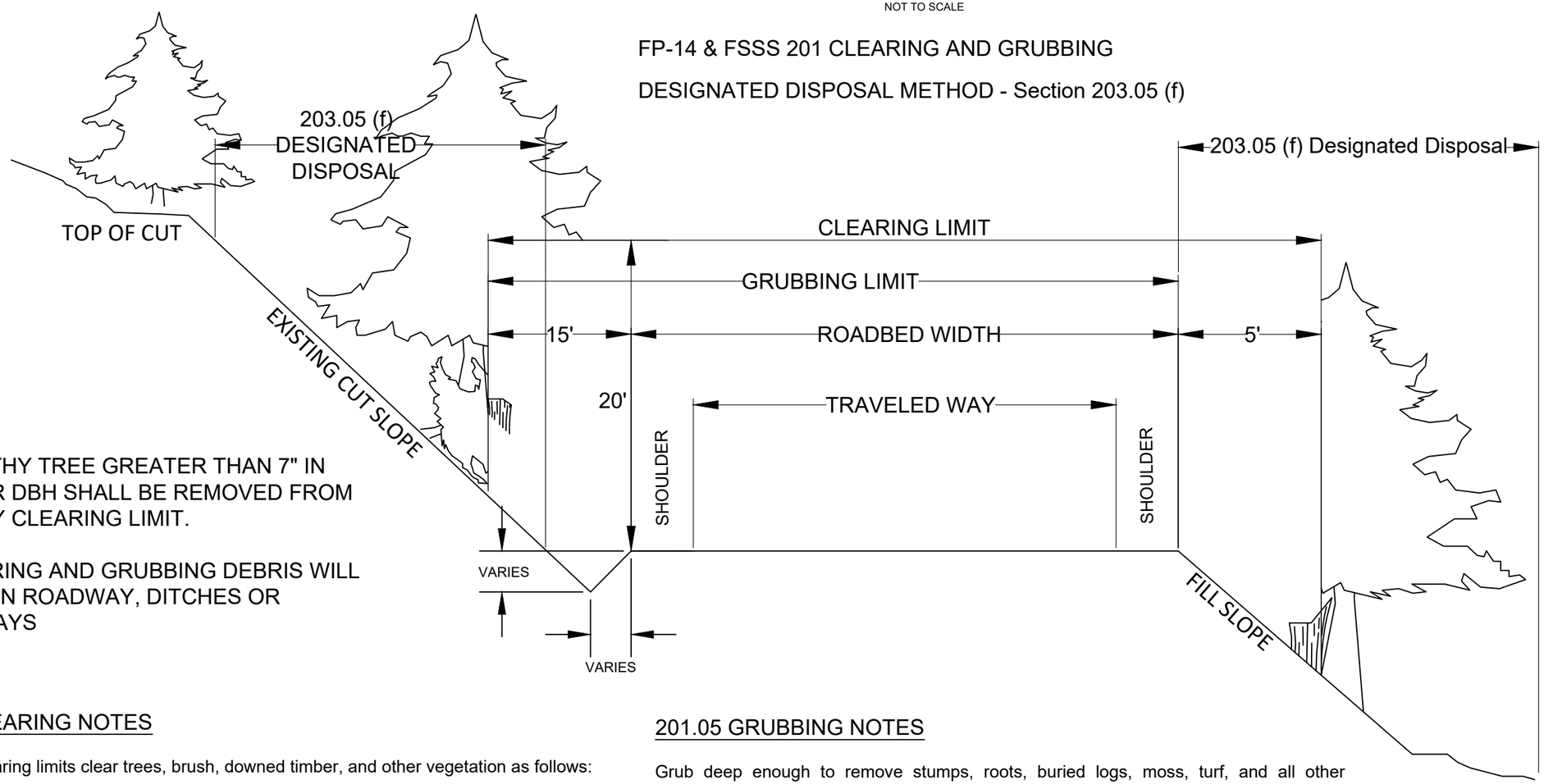

NO HEALTHY TREE GREATER THAN 7" IN DIAMETER DBH SHALL BE REMOVED FROM ROADWAY CLEARING LIMIT.

NO CLEARING AND GRUBBING DEBRIS WILL REMAIN ON ROADWAY, DITCHES OR WATERWAYS

201.04 CLEARING NOTES

Within the clearing limits clear trees, brush, downed timber, and other vegetation as follows:

(a) Cut trees so they fall within the clearing limits;

(b) In areas of cut slope rounding, cut stumps flush with or below the final ground-line;

(c) In areas outside the excavation, embankment, and slope rounding limits, cut stumps to within 6 inches (150 millimeters) of the ground; and

(d) Trim tree branches that extend over the road surface and shoulders to attain a clear height of 20 feet (6 meters). If required, remove other branches to present a balanced appearance. Trim according to accepted tree surgery practices. Treat wounds with tree wound dressing.

201.05 GRUBBING NOTES

Grub deep enough to remove stumps, roots, buried logs, moss, turf, and all other vegetative debris:

(a) Grub areas to be excavated or reconditioned, except cut slope rounding areas;

(b) Grub embankment areas. Undisturbed stumps less than 24 inches (600 millimeters) in diameter may be left in place if they protrude less than 6 inches (150 millimeters) above the original ground and will be covered with more than 48 inches (1200 millimeters) of embankment. Remove all other stumps;

(c) Grub pits, channel changes, and ditches to depth necessary for excavation & reconditioning; and

(d) Backfill stump holes and other grubbing holes with backfill material to the level of the surrounding ground according to Subsection 209.09. Compact backfill according to Subsection 209.10.

DRIVABLE DRAIN DIP

TYPE: EXCAVATED

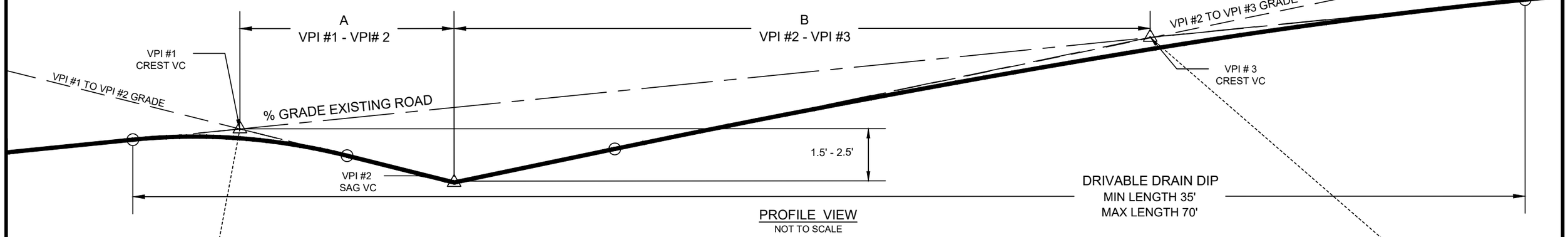

PROFILE VIEW
NOT TO SCALE

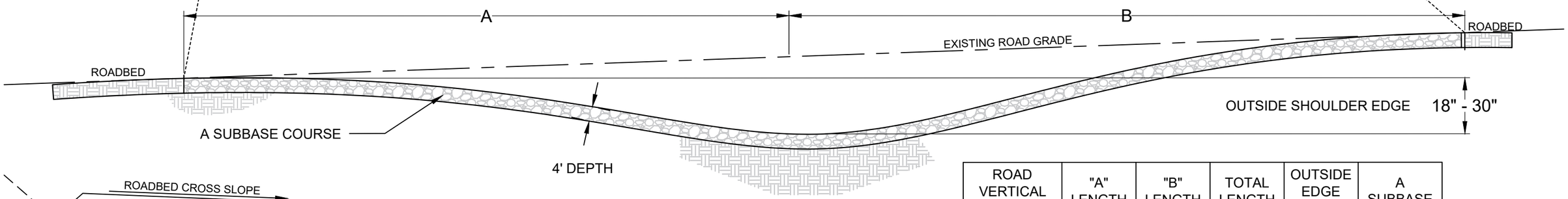

DETAIL VIEW
NOT TO SCALE

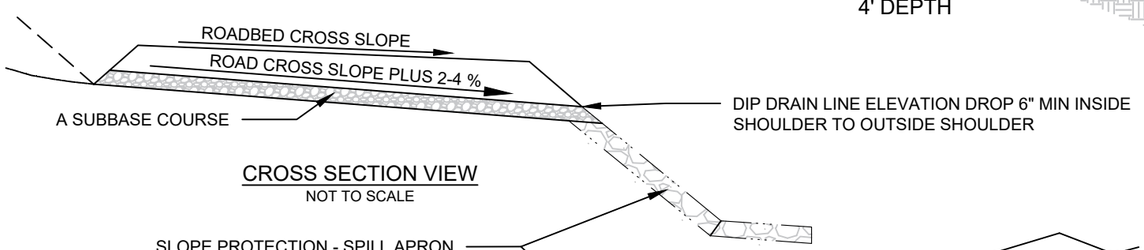

CROSS SECTION VIEW
NOT TO SCALE

ROAD VERTICAL GRADE (PERCENT)	"A" LENGTH (FEET)	"B" LENGTH (FEET)	TOTAL LENGTH (FEET)	OUTSIDE EDGE DEPTH (INCH)	A SUBBASE (CY)
0 to 4%	10' - 12'	20' - 25'	35' - 45'	18" - 24"	5 - 8 CY
5% to 8%	12' - 15'	25' - 30'	45' - 55'	18" - 24"	7 - 10 CY
9% to 12%	15' - 18'	30' - 35'	55' - 65'	18" - 24"	8 - 12 CY
12% to 15%	18' - 20'	35' - 40'	65' - 75'	18" - 24"	9 - 14 CY
SUBBASE INCIDENTAL TO DRIVEABLE DRAIN DIP PAYMENT. SUBBASE CUBIC YARD RANGE BASE ON 14 - 18 FT ROADBED WIDTH.					

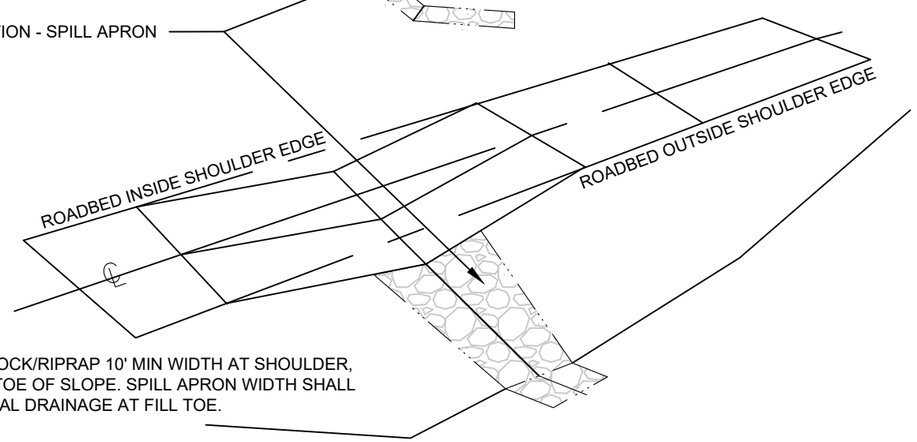

SLOPE PROTECTION CRUSHED ROCK/RIPRAP 10' MIN WIDTH AT SHOULDER, TAPER TO MATCH DRAINAGE AT TOE OF SLOPE. SPILL APRON WIDTH SHALL MATCH OUTLET DITCH OR NATURAL DRAINAGE AT FILL TOE.

NOTES:

1. DRIVABLE DRAIN DIP SHALL DRAIN TO DITCH, OUTLET DITCH, OR NATURAL DRAINAGE WHEN DIP DRAINS TO FILL PROVIDE SLOPE PROTECTION WITH SPILL APRON. SLOPE PROTECTION IS INCIDENTAL.
2. **PAYMENT FOR DRIVABLE DIP INCLUDES CONSTRUCTION AND BASE SURFACE MATERIAL. BASE COURSE SURFACE TREATMENT GRADE DESIGNATION C(BASE) TABLE 703-2.**
3. DIPS CONSTRUCTED FROM ROADWAY DITCH SHALL DRAIN DITCH FLOW ACROSS THE DIP. CROSS SLOPE OF DRAIN LINE SHALL BE CROSS SLOPE OF ROAD PLUS 2%. THE MINIMUM DRAIN LINE CROSS SLOPE 4%.
4. OUTLET DITCH, IF SPECIFIED, SHALL HAVE CUT SLOPES AT 2 : 1 OR FLATTER. OUTLET DITCH CUT EXCAVATION MATERIAL SHALL BE MOUNDED ADJACENT TO DITCH FOR PROPER DRAINAGE.
5. OUTLET DITCH, SLOPE PROTECTION, OR SPILL APRON CONSTRUCTION INCLUDING CRUSHED ROCK/RIP RAP, IF SPECIFIED, SHALL BE PAID SEPARATELY.
6. DRIVABLE DRAIN DIP MAY BE INSLOPED OR OUTSLOPED. DETAIL SHOWN IS FOR OUTSLOPED DIP.

WATTLE (FIBER ROLL) CHECK DAM

NOT TO SCALE

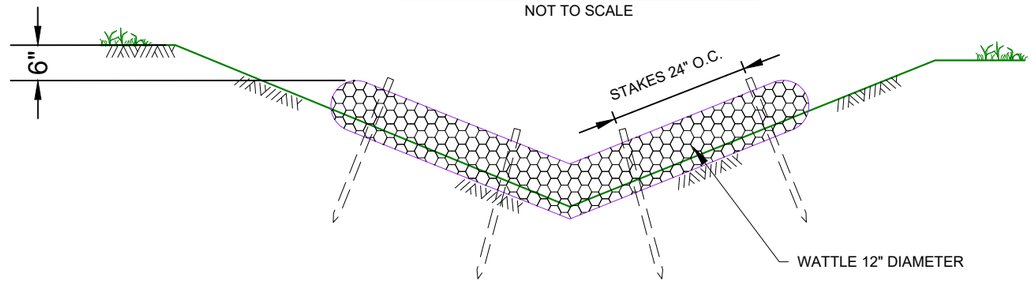

CROSS SECTION V DITCH *

* FLAT BOTTOM DITCH WATTLE INSTALLATION PROCESS SAME AS V-DITCH EXCEPT ADD ADDITIONAL WATTLE LENGTH FOR DITCH BOTTOM WIDTH

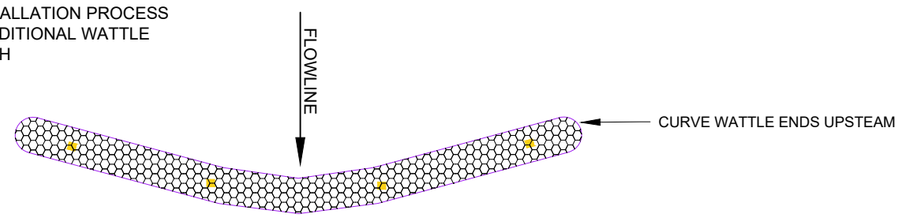

PLAN VIEW V DITCH

WATTLE CHECK DAM	
DITCH GRADE (G) %	CHECK DAM SPACING MAX FT
2	75
3	50
4	40
5	30

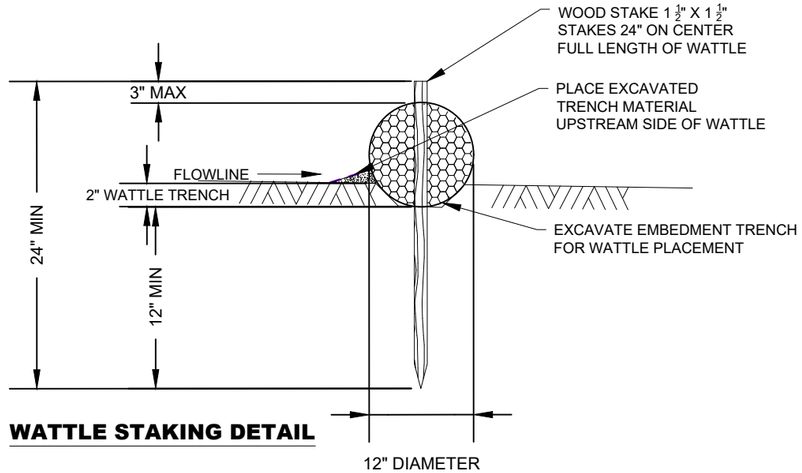

WATTLE STAKING DETAIL

CHECK DAM INSTALLATION:

1. INSTALL CHECK DAM PERPENDICULAR TO DITCH GRADE FLOWLINE.
2. CHECK DAMS ARE NOT INSTALLED ON DITCH GRADES LESS THAN 2%.
3. INSTALL WATTLE CHECK DAMS FOR DITCH GRADES 2%-5% IN RECONDITIONED OR FINISHED DITCH.
4. INSTALL ROCK CHECK DAMS FOR DITCH GRADE 5%-6% IN RECONDITIONED OR FINISHED DITCH.
5. CONSTRUCT CHECK DAM TO MEET FUNCTIONAL PERFORMANCE PER PLAN OR AS APPROVED BY CO.
6. CHECK DAMS SHALL BE INSPECTED AFTER WEATHER EVENTS PRODUCING RUNOFF. INSPECT FOR PERFORMANCE, CONDITION & , EROSION, OVERTOPPING AND FAILURE.

ROCK CHECK DAM

NOT TO SCALE

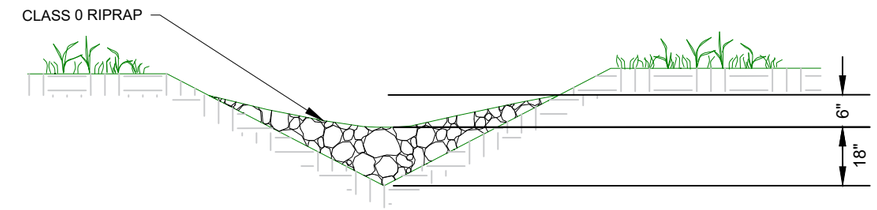

CROSS SECTION V DITCH

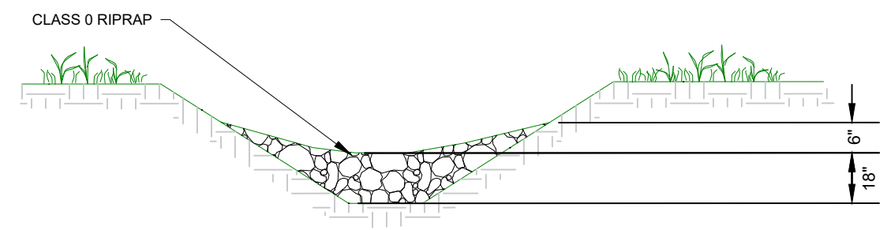

CROSS SECTION FLAT-BOTTOM DITCH

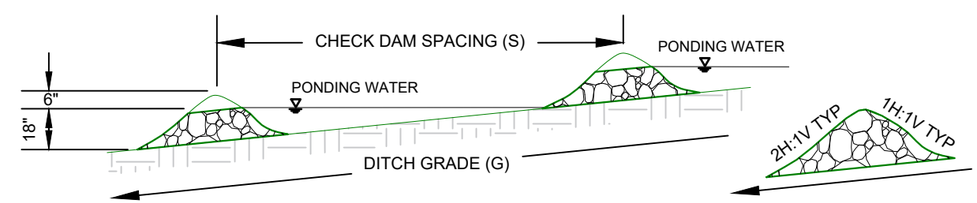

PROFILE VIEW DITCH GRADE

ROCK CHECK DAM	
DITCH GRADE (G) %	CHECK DAM SPACING (S) FT
2	75
3	50
4	40
5	30
6	25

TABLE 705 - 1			
Gradation Requirements for Riprap(1)			
Class	% of Rock Equal or Smaller by Count, DX	Range of Intermediate Dimensions,(2) inches	Range of Rock Mass,(3) pounds
0	100	6 - 8	17 - 41
	85	5 - 6	10 - 17
	50	2 - 5	0.6 - 10
	15	0 -2	0 - 0.5

TYPE II GATE DETAIL

NOT TO SCALE

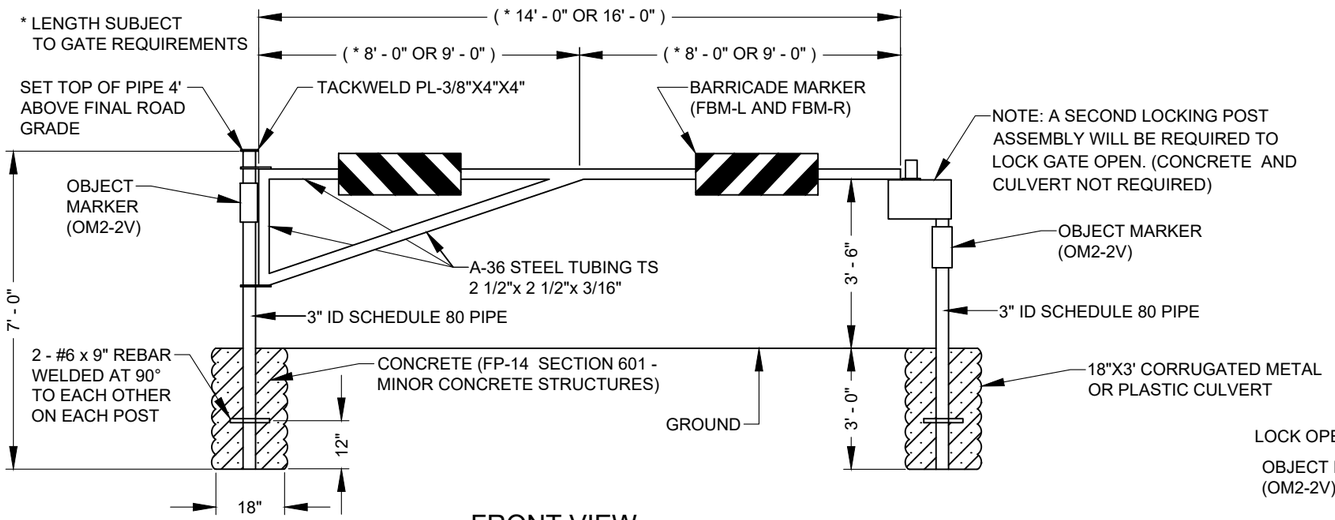

FRONT VIEW

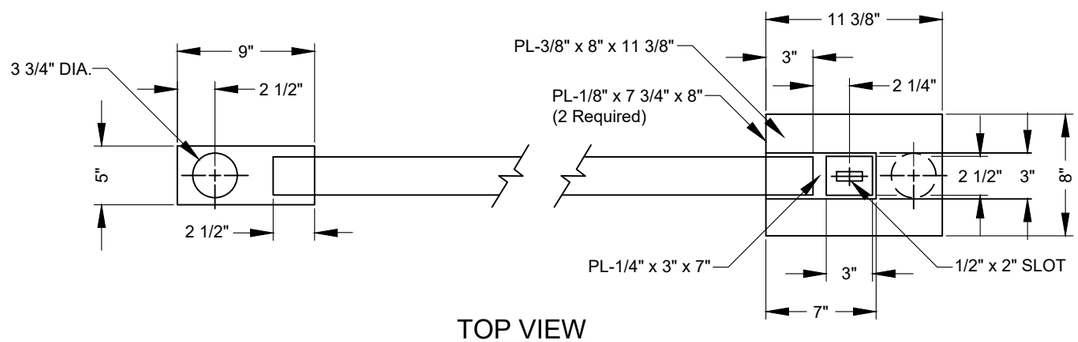

TOP VIEW

NOTES

1. EXTERIOR METAL EPOXY PAINT, COCOA BROWN UNLESS OTHERWISE APPROVED BY THE ENGINEER.
2. ALL WELDS REQUIRED TO MANUFACTURE GATE, UNLESS OTHERWISE SHOWN, SHALL BE FILLET AND SHALL BE OF THE SAME SIZE AS THE THICKNESS OF THE SMALLER OF THE TWO PIECES BEING JOINED.
3. ALL SIGNS SHALL MEET MUTCD REQUIREMENTS.
4. BARRICADE MARKERS SHALL BE SHEETED WITH HI-INTENSITY PRISMATIC SHEETING ON ALUMINUM SUBSTRATE. THEY SHALL BE 8"X24" WHEN APPROACH SPEEDS ARE 35MPH OR LESS AND 11"X36" WHEN APPROACH SPEEDS ARE GREATER THAN 35MPH. COLOR IS RED AND WHITE ALTERNATING STRIPES. ALL STRIPES ARE TO BE POINTED DOWN AND TO THE CENTER OF THE TRAVELWAY. 4 SIGNS REQUIRED - 2 FBM-L AND 2 FBM-R.
5. TYPE 2 OBJECT MARKERS (OM2-2V) SHALL BE SHEETED WITH HI-INTENSITY PRISMATIC SHEETING ON ALUMINUM SUBSTRATE (6 REQUIRED).
6. ALL SIGNS SHALL BE MOUNTED IN A WAY THAT DOES NOT INTERFERE WITH THE OPERATION OF THE GATE AND WILL ALLOW FOR EASY REMOVAL/ REPLACEMENT OF DAMAGED SIGNS. DO NOT WELD NUTS AND BOLTS.

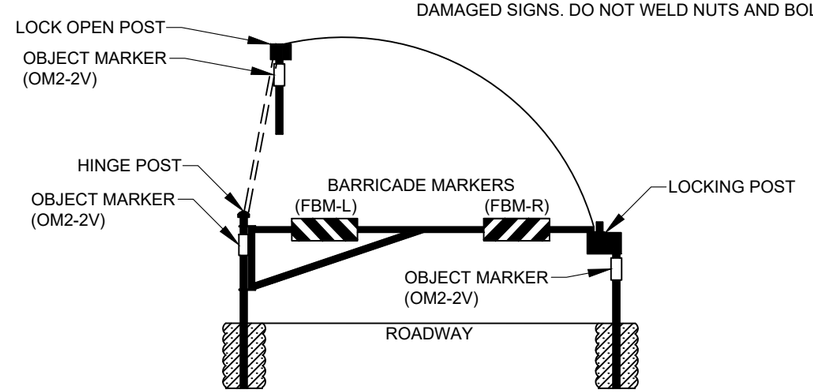

PERSPECTIVE VIEW

(LOCKING GATE & POST)

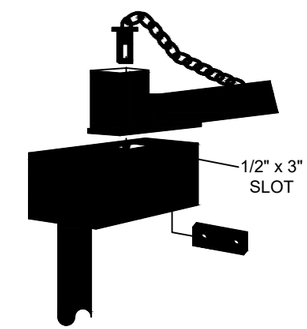

PERSPECTIVE VIEW

(LOCKING ASSEMBLY)

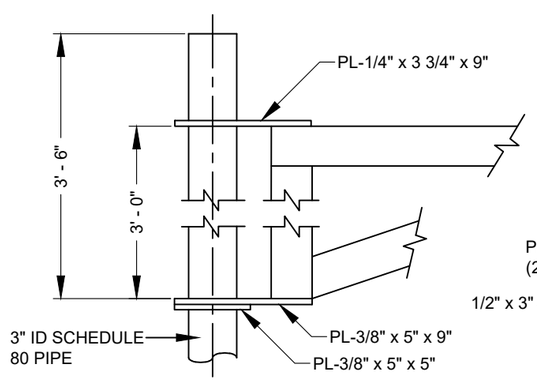

HINGE POST DETAIL

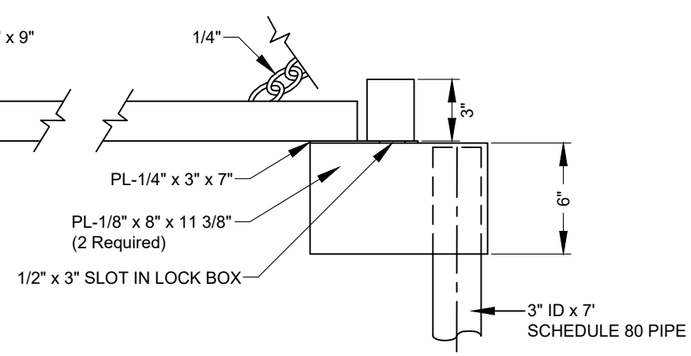

LOCKING POST DETAIL

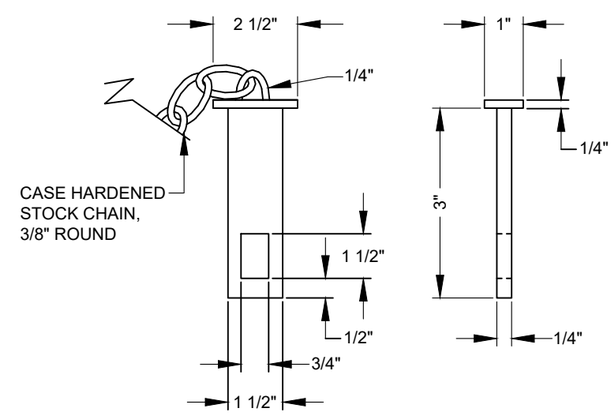

MASTER PIN DETAIL

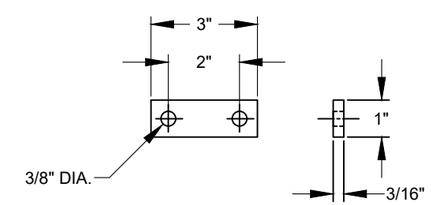

DOUBLE LOCK PIN DETAIL

THIS DETAIL IS INFORMATIONAL TO REMOVE AND RESET EXISTING GATE.

CULVERT LISTING

DESIGNED			AS BUILT			CORRUGATION, THICKNESS & MATERIAL		CULVERT INSTALLATION DETAILS SEE CULVERT DETAIL SHEET(S)								REMARKS
MILEPOST OR STATION	DIAMETER IN INCHES	LENGTH IN FEET	MILEPOST OR STATION	DIAMETER IN INCHES	LENGTH IN FEET	2 2/3 IN X 1/2 IN X .064 TH STEEL (16 GA)	EXISITNG CULVERT	INSTALLATION TYPE	SKEW (TF - TO FIT)	COMPACTION METHOD 204.11 (_)	STAKING METHOD 125.05 (_)	WATER PRESENT	INLET CATCH BASIN	INLET PROTECTION	OUTLET PROTECTION	GA. - GAUGE FE. - STEEL AL. - ALUMINUM ALL REMOVED CULVERTS SHALL BE DISPOSED OF PER FP-14 203.05(a) RECYCLE OR DISPOSE OF LEGALLY OFF PROJECT. FSSS 203.05(f) SLASH DISPOSAL METHOD SHALL BE APPLIED FOR ANY CLEARING SPECIFIED WITH CULVERT INSTALLATION.
OPTION 1 COX MEADOW ACCESS RD, FS# 3005200 MILEPOST 0.00 TO 1.90																
0.45	24	35				✓		3	TF	f	g	NO	YES	YES	*	Remove existing 15"D culvert. Install 24" Diam culvert with catch basin.
1.20	24	35				✓		3	TF	f	g	NO	YES	YES	*	Remove existing 15"D culvert. Install 24" Diam culvert with catch basin.
																* Outlet invert finished grade should be toe of fill slope.
END OF CULVERT LIST																

COLVILLE NATIONAL FOREST
TONASKET RANGER DISTRICT

REVISIONS		
REV.	DESCRIPTION	DATE
		07/06/22

DESIGNED BY: M MELVIN
CHECKED BY: PLAN REVIEW

OPTION 1 CULVERT LIST
COX MEADOW ACCESS RD RECONDITION

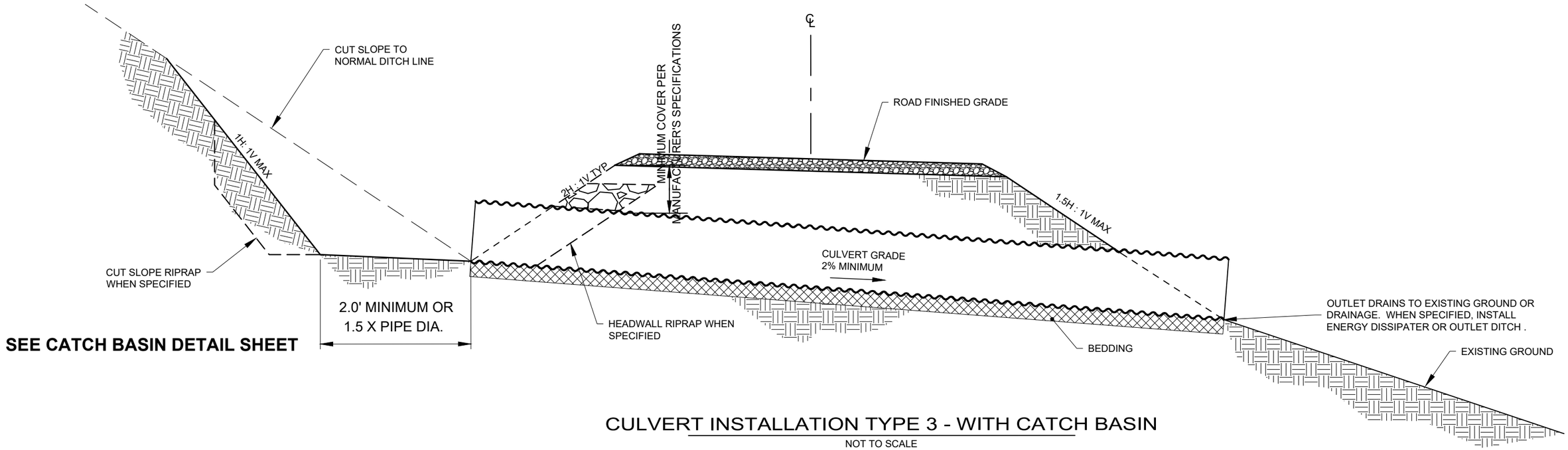

SEE CATCH BASIN DETAIL SHEET

CULVERT INSTALLATION TYPE 3 - WITH CATCH BASIN

NOT TO SCALE

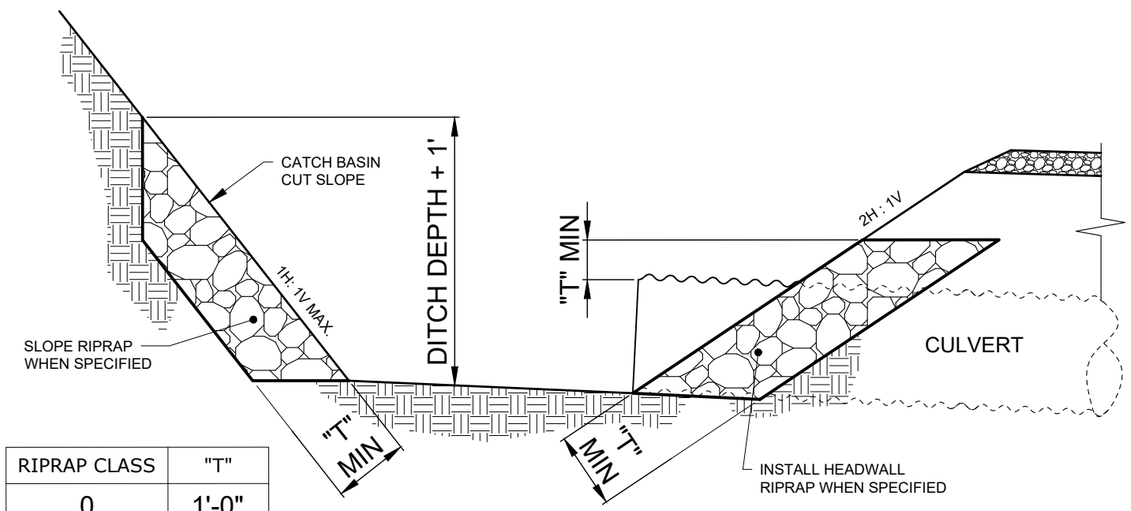

RIPRAP CLASS	"T"
0	1'-0"
1	1'-6"
2	2'-6"
3	3'-0"
4	3'-6"

RIPRAP DETAIL

NOT TO SCALE

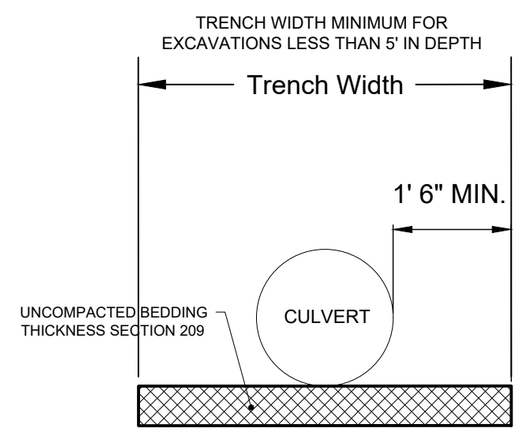

BEDDING DETAIL

NOT TO SCALE

APPROVED BEDDING MAY BE NATIVE
MATERIAL OR ALTERNATE SOURCE

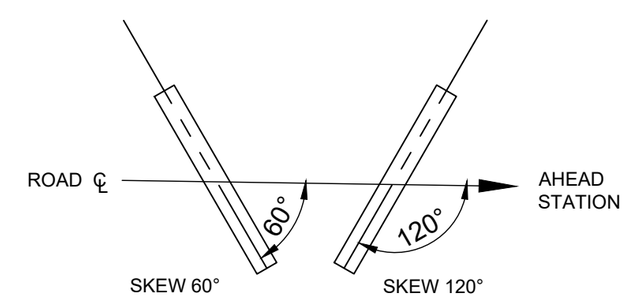

SKEW DIAGRAM

NOT TO SCALE

COLVILLE NATIONAL FOREST
TONASKET RANGER DISTRICT

REVISIONS		
REV.	DESCRIPTION	DATE

DESIGNED BY: M MELVIN
CHECKED BY: PLAN REVIEW

OPTION 1 CULVERT INSTALLATION TYPE 3
COX MEADOW ACCESS RD RECONDITION

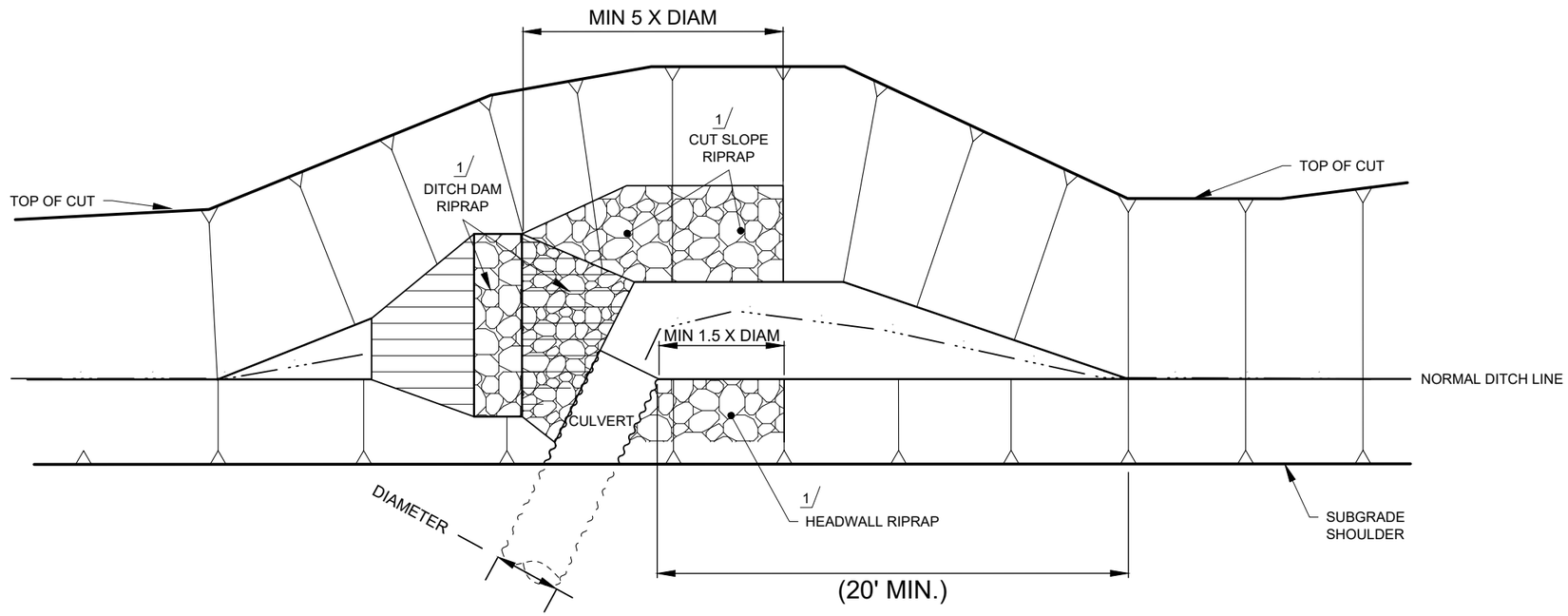

PLAN VIEW

CATCH BASIN PLAN

NOT TO SCALE

1/ INSTALL RIPRAP WHEN SPECIFIED

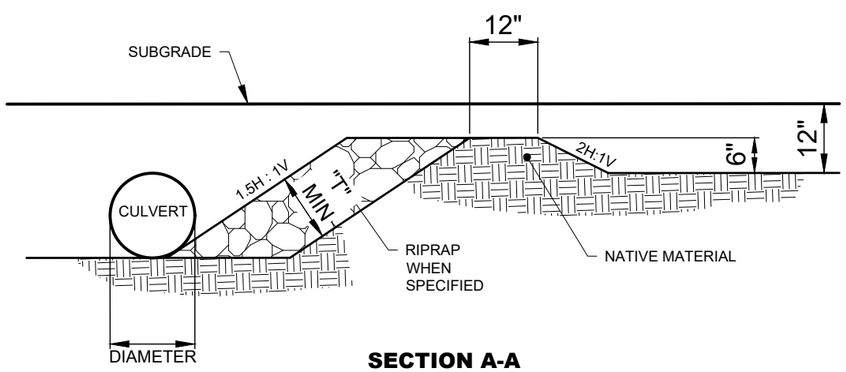

SECTION A-A

RIPRAP CLASS	"T"
0	1'-0"
1	1'-6"
2	2'-6"
3	3'-0"
4	3'-6"

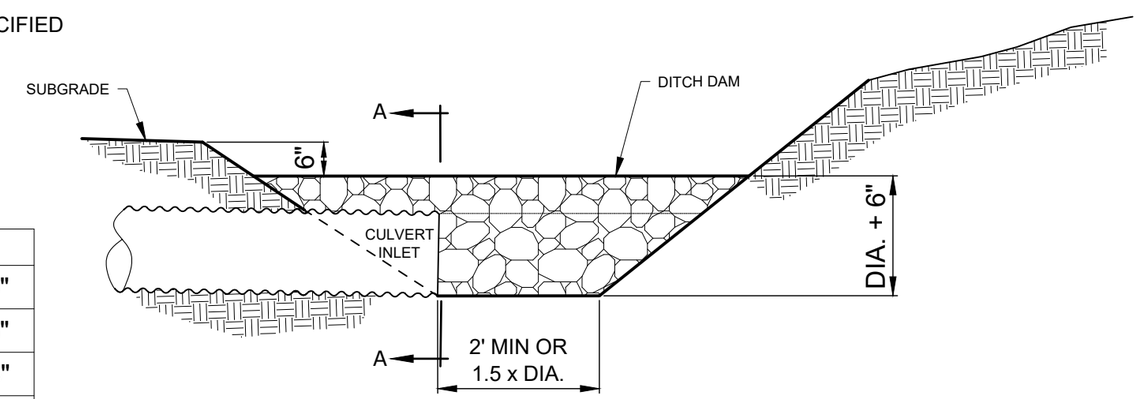

CATCH BASIN ELEVATION

COLVILLE NATIONAL FOREST
TONASKET RANGER DISTRICT

REVISIONS		
REV.	DESCRIPTION	DATE

DESIGNED BY: M MELVIN
CHECKED BY: PLAN REVIEW

OPTION 1 CATCH BASIN DETAIL
COX MEADOW ACCESS RD RECONDITION

COX ACCESS ROAD FSR 3005200 & FSR 3005220 - ROADWAY CONDITIONS

FSR 3005200 MP 0 INCREASING MILEPOST

FSR 3005200 MP 0.1 INCREASING MILEPOST

FSR 3005200 MP 0.2 INCREASING MILEPOST

FSR 3005200 MP 0.4 INCREASING MILEPOST

FSR 3005200 MP 1.1 INCREASING MILEPOST

FSR 3005200 MP 1.2 INCREASING MILEPOST

FSR 3005200 MP 1.3 INCREASING MILEPOST

FSR 3005200 MP 1.5 INCREASING MILEPOST

FSR 3005200 MP 1.7 INCREASING MILEPOST

FSR 3005200 MP 1.9 INCREASING MP 200 RT, 220 LT

FSR 3005220 MP 0 INCREASING MILEPOST

FSR 3005220 MP 0.1 INCREASING MILEPOST

COLVILLE NATIONAL FOREST
TONASKET RANGER DISTRICT

REVISIONS

REV.	DESCRIPTION	DATE

DESIGNED BY: M MELVIN
CHECKED BY: PLAN REVIEW

TYPE II GATE DETAIL
COX MEADOW ACCESS RD RECONDITION

SHEET 16 OF 16

"General Decision Number: WA20260054 05/18/2026

State: Washington

Construction Types: Heavy

Counties: Washington Counties of
Okanogan

Modification Number	Publication Date
1	01/23/2026
2	05/18/2026

CARP0059-024 06/01/2025

	Rates	Fringes
CARPENTER (INCLUDING FORM WORK)	$ 44.21	17.28

CARP1607-009 06/01/2025

	Rates	Fringes
MILLWRIGHT	$ 61.62	20.43

ELEC0077-001 02/01/2023

	Rates	Fringes
LINE CONSTRUCTION: LINEMEN	$ 60.54	24.88

ELEC0191-015 06/01/2020

	Rates	Fringes
ELECTRICIAN	$ 46.15	26.10

ENGI0302-007 06/01/2025

	Rates	Fringes
POWER EQUIPMENT OPERATOR: ZONE 1: GROUP 4 CRANES-A FRAME-10 TONS AND UNDER; ROLLER-OTHER THAN PLANT MIX; FORKLIFT: UNDER 3000 LBS WITH ATTACHMENTS; BOOM TRUCK 10 TONS AND UNDER		

(COUNTY WHICH LIES WEST OF THE 120TH
MERIDIAN)

ZONE DIFFERENTIAL (ADD TO ZONE 1 RATES): ZONE 2 (26-45 RADIUS MILES) - $1.00 ZONE 3 (OVER 45 RADIUS MILES) - $1.30 BASEPOINTS: ABERDEEN, BELLINGHAM, BREMERTON, EVERETT, KENT, MOUNT VERNON, PORT ANGELES, PORT TOWNSEND, SEATTLE, SHELTON, WENATCHEE, YAKIMA.....$ 55.43 27.57
POWER EQUIPMENT OPERATOR: ZONE 1: GROUP 3
CRANES-THRU 19 TONS WITH ATTACHMENTS; A-FRAME CRANE OVER 10 TONS; DOZERS-D-9 AND UNDER; ROLLER-PLANT MIX; EXCAVATOR/TRACKHOE, BACKHOE: UNDER 15 METRIC TONS; FORKLIFT: 3000 LBS AND OVER WITH ATTACHMENTS; OILER; GRADER (NON-FINISHING); BOOM TRUCK OVER 10 TONS

(COUNTY WHICH LIES WEST OF THE 120TH MERIDIAN)

ZONE DIFFERENTIAL (ADD TO ZONE 1 RATES): ZONE 2 (26-45 RADIUS MILES) - $1.00 ZONE 3 (OVER 45 RADIUS MILES) - $1.30 BASEPOINTS: ABERDEEN, BELLINGHAM, BREMERTON, EVERETT, KENT, MOUNT VERNON, PORT ANGELES, PORT TOWNSEND, SEATTLE, SHELTON, WENATCHEE, YAKIMA.....$ 59.23 27.57
POWER EQUIPMENT OPERATOR: ZONE 1: GROUP 2 CRANES, 20 TONS THRU 44 TONS WITH ATTACHMENTS;
CRANE-OVERHEAD, BRIDGE TYPE-20 TONS THROUGH 44 TONS; EXCAVATOR/TRACKHOE, BACKHOE: 15 TO 30 METRIC TONS; LOADERS-OVERHEAD UNDER 6 YARDS; MECHANIC; GRADER (FINISHING)

(COUNTY WHICH LIES WEST OF THE 120TH MERIDIAN)

ZONE DIFFERENTIAL (ADD TO ZONE 1 RATES): ZONE 2 (26-45 RADIUS MILES) - $1.00 ZONE 3 (OVER 45 RADIUS MILES) - $1.30 BASEPOINTS: ABERDEEN, BELLINGHAM, BREMERTON, EVERETT, KENT,

MOUNT VERNON, PORT ANGELES, PORT TOWNSEND, SEATTLE,
SHELTON, WENATCHEE, YAKIMA.....$ 59.88 27.57
POWER EQUIPMENT OPERATOR: ZONE 1: GROUP 1AAA
CRANES-OVER 300 TONS, OR 300 FT OF BOOM (INCLUDING
JIB WITH ATTACHMENTS)

(COUNTY WHICH LIES WEST OF
THE 120TH MERIDIAN)

ZONE DIFFERENTIAL (ADD TO ZONE 1
RATES): ZONE 2 (26-45 RADIUS MILES) - $1.00 ZONE
3 (OVER 45 RADIUS MILES) - $1.30 BASEPOINTS:
ABERDEEN, BELLINGHAM, BREMERTON, EVERETT, KENT,
MOUNT VERNON, PORT ANGELES, PORT TOWNSEND, SEATTLE,
SHELTON, WENATCHEE, YAKIMA.....$ 63.35 27.57
POWER EQUIPMENT OPERATOR: ZONE 1: GROUP 1AA CRANES
200 TO 300 TONS, OR 250 FT OF BOOM (INCLUDING JIB
WITH ATTACHMENTS); TOWER CRANE OVER 175 FT IN
HEIGHT, BASE TO BOOM; EXCAVATOR/TRACKHOE, BACKHOES:
OVER 90 METRIC TONS

(COUNTY WHICH
LIES WEST OF THE 120TH MERIDIAN)

ZONE DIFFERENTIAL (ADD TO
ZONE 1 RATES): ZONE 2 (26-45 RADIUS MILES) - $1.00
ZONE 3 (OVER 45 RADIUS MILES) - $1.30 BASEPOINTS:
ABERDEEN, BELLINGHAM, BREMERTON, EVERETT, KENT,
MOUNT VERNON, PORT ANGELES, PORT TOWNSEND, SEATTLE,
SHELTON, WENATCHEE, YAKIMA.....$ 62.47 27.57
POWER EQUIPMENT OPERATOR: ZONE 1: GROUP 1 CRANES 45
TONS THRU 99 TONS, UNDER 150 FT OF BOOM (INCLUDING
JIB WITH ATTACHMENTS); CRANE-OVERHEAD, BRIDGE TYPE,
45 TONS THRU 99 TONS; DERRICKS ON BUILDING WORK
EXCAVATOR/TRACKHOE, BACKHOES: OVER 30 METRIC TONS
TO 50 METRIC TONS; LOADER- OVERHEAD 6 YARDS TO, BUT
NOT INCLUDING 8 YARDS; DOZER D-10

(COUNTY WHICH LIES WEST OF THE
120TH MERIDIAN)

ZONE DIFFERENTIAL (ADD TO ZONE 1 RATES):
ZONE 2 (26-45 RADIUS MILES) - $1.00 ZONE 3 (OVER
45 RADIUS MILES) - $1.30 BASEPOINTS: ABERDEEN,
BELLINGHAM, BREMERTON, EVERETT, KENT, MOUNT VERNON,
PORT ANGELES, PORT TOWNSEND, SEATTLE, SHELTON,
WENATCHEE, YAKIMA.....$ 60.67 27.57
POWER EQUIPMENT OPERATOR: ZONE 1: GROUP 1A CRANES,
100 TONS THRU 199 TONS, OR 150 FT OF BOOM
(INCLUDING JIB WITH ATTACHMENTS); LOADERS-OVERHEAD,
8 YARDS AND OVER; EXCAVATOR/TRACKHOE, BACKHOES:
OVER 50 METRIC TONS TO 90 METRIC TONS

(COUNTY WHICH LIES WEST OF THE
120TH MERIDIAN)

ZONE DIFFERENTIAL (ADD TO ZONE 1 RATES):
ZONE 2 (26-45 RADIUS MILES) - $1.00 ZONE 3 (OVER
45 RADIUS MILES) - $1.30 BASEPOINTS: ABERDEEN,
BELLINGHAM, BREMERTON, EVERETT, KENT, MOUNT VERNON,
PORT ANGELES, PORT TOWNSEND, SEATTLE, SHELTON,
WENATCHEE, YAKIMA.....$ 61.56 27.57

ENGI0302-129 06/01/2025

Rates Fringes

POWER EQUIPMENT OPERATOR: GROUP 8 CRANES (85 TONS
AND OVER, AND ALL CLIMBING, OVERHEAD,RAIL AND
TOWER); LOADERS (OVERHEAD AND FRONT-END, 10 YARDS
AND OVER)

(OKANOGAN COUNTY WHICH LIES EAST OF THE 120TH
MERIDIAN).....$ 45.36 23.40
POWER EQUIPMENT OPERATOR: GROUP 7 BACKHOE (OVER
110,000); TRACKHOE/EXCAVATOR (3 YDS & OVER); CRANES
(OVER 45 TONS TO BUT NOT INCLUDING 85 TONS);
LOADERS (OVERHEAD & FRONT-END, OVER 8 YDS. TO 10
YDS.); GRADER/BLADE

(OKANOGAN COUNTY WHICH LIES
EAST OF THE 120TH MERIDIAN).....$ 43.39 23.40
POWER EQUIPMENT OPERATOR: GROUP 6 ASPHALT ROLLER;
BACKHOE (45,000 GW AND OVER TO 110,000 GW);
TRACKHOE/EXCAVATOR (3/4 YD. TO 3 YD.); CRANES (OVER
25 TONS, TO AND INCLUDING 45 TONS), BULLDOZER, 834

R/T & SIMILAR; LOADER OPERATOR (FRONT-END &
OVERHEAD, 4 YDS. INCL. 8 YDS.); MECHANIC

(OKANOGAN COUNTY WHICH LIES EAST OF THE 120TH
MERIDIAN).....$ 43.05 23.40
POWER EQUIPMENT OPERATOR: GROUP 5 BACKHOE (UNDER
45,000 GW); TRACKHOE/EXCAVATOR (UNDER 3/4 YD.);
CRANES (25 TONS & UNDER); BOOM TRUCK (UNDER 25
TONS)

(OKANOGAN COUNTY WHICH LIES EAST
OF THE 120TH MERIDIAN).....$ 42.71 23.40
POWER EQUIPMENT OPERATOR: GROUP 4 LOADERS (OVERHEAD
& FRONT-END, UNDER 4 YDS. R/T); OILER

(OKANOGAN COUNTY WHICH LIES EAST OF THE 120TH
MERIDIAN).....$ 42.51 23.40
POWER EQUIPMENT OPERATOR: GROUP 3 BULLDOZER (UP TO
D-6 OR EQUIVALENT)

(OKANOGAN COUNTY WHICH LIES EAST OF THE 120TH
MERIDIAN).....$ 42.31 23.40
POWER EQUIPMENT OPERATOR: GROUP 2 FORK LIFT

(OKANOGAN
COUNTY WHICH LIES EAST OF THE 120TH MERIDIAN).....$ 41.56 23.40
POWER EQUIPMENT OPERATOR: GROUP 1 ROLLERS, ALL
TYPES ON SUBGRADE, INCLUDING SEAL AND CHIP COATINGS

(OKANOGAN COUNTY WHICH
LIES EAST OF THE 120TH MERIDIAN).....$ 41.17 23.40

```
----------------------------------------------------------------

 IRON0014-001 07/07/2025
                                                   Rates                Fringes
IRONWORKER (REINFORCING AND STRUCTURAL).............$ 43.40                32.77
----------------------------------------------------------------

 LABO0238-007 06/01/2025
                                                   Rates                Fringes
LABORER, MASON TENDER BRICK.........................$ 38.05                16.75
----------------------------------------------------------------

 LABO0238-019 06/01/2025
                                                   Rates                Fringes
LABORER: A-2: GROUP 10 GRADE CHECKER................$ 43.21                16.90
LABORER: A-2: GROUP  3 CEMENT/CONCRETE; PIPELAYER;
CHIPPING GUNS.......................................$ 40.46                16.90
LABORER: A-2: GROUP  2 COMMON OR GENERAL LABORER....$ 40.13                16.90
LABORER: A-2: GROUP  1 FLAGGER......................$ 37.03                16.90
----------------------------------------------------------------

 PAIN0427-003 07/01/2025
                                                   Rates                Fringes
PAINTER (BRUSH, ROLLER, AND SPRAY.).................$ 36.26                17.01
----------------------------------------------------------------

 SUWA2009-045 08/07/2009
                                                   Rates                Fringes
TRUCK DRIVER: 10  YARD TRUCK........................$ 24.61                 8.34
TRUCK DRIVER:  WATER TRUCK..........................$ 24.36                 8.30
TRUCK DRIVER:  DUMP TRUCK...........................$ 19.67                 0.00
PIPEFITTER..........................................$ 25.98                 3.98
OPERATOR:  DRILL....................................$ 28.15                 8.20
LABORER:  LANDSCAPE.................................$ 14.67                 0.00
CEMENT MASON/CONCRETE FINISHER......................$ 17.21                 0.00
----------------------------------------------------------------

------------------------------------------------------------------------------------------------------
WELDERS - Receive rate prescribed for craft performing
operation to which welding is incidental.
================================================================
Note: Executive Order (EO) 13706, Establishing Paid Sick Leave
for Federal Contractors applies to all contracts subject to the
Davis-Bacon Act for which the contract is awarded (and any
solicitation was issued) on or after January 1, 2017.  If this
contract is covered by the EO, the contractor must provide
employees with 1 hour of paid sick leave for every 30 hours
they work, up to 56 hours of paid sick leave each year.
Employees must be permitted to use paid sick leave for their
own illness, injury or other health-related needs, including
preventive care; to assist a family member (or person who is
like family to the employee) who is ill, injured, or has other
health-related needs, including preventive care; or for reasons
resulting from, or to assist a family member (or person who is
like family to the employee) who is a victim of, domestic
violence, sexual assault, or stalking.  Additional information
on contractor requirements and worker protections under the EO
is available at
https://www.dol.gov/agencies/whd/government-contracts.

Note: Executive Order 13658 generally applies to contracts subject
to the Davis-Bacon Act that were awarded on or between January 1,
2015 and January 29, 2022, and that have not been renewed or
extended on or after January 30, 2022. Executive Order 13658 does
not apply to contracts subject only to the Davis-Bacon Related Acts
```

regardless of when they were awarded. If a contract is subject to Executive Order 13658, the contractor must pay all covered workers at least $13.65 per hour (or the applicable wage rate listed on this wage determination, if it is higher) for all hours spent performing on the contract from May 11, 2026, through December 31, 2026. The applicable Executive Order minimum wage rate will be adjusted annually. Additional information on contractor requirements and worker protections under Executive Order 13658 is available at www.dol.gov/whd/govcontracts.

Unlisted classifications needed for work not included within the scope of the classifications listed may be added after award only as provided in the labor standards contract clauses (29CFR 5.5 (a) (1) (iii)).

The body of each wage determination lists the classifications and wage rates that have been found to be prevailing for the type(s) of construction and geographic area covered by the wage determination. The classifications are listed in alphabetical order under rate identifiers indicating whether the particular rate is a union rate (current union negotiated rate), a survey rate, a weighted union average rate, a state adopted rate, or a supplemental classification rate.

Union Rate Identifiers

A four-letter identifier beginning with characters other than ⿰SU⿰, ⿰UAVG⿰, ⿰SA⿰, or ⿰SC⿰ denotes that a union rate was prevailing for that classification in the survey. Example: PLUM0198-005 07/01/2024. PLUM is an identifier of the union whose collectively bargained rate prevailed in the survey for this classification, which in this example would be Plumbers. 0198 indicates the local union number or district council number where applicable, i.e., Plumbers Local 0198. The next number, 005 in the example, is an internal number used in processing the wage determination. The date, 07/01/2024 in the example, is the effective date of the most current negotiated rate.

Union prevailing wage rates are updated to reflect all changes over time that are reported to WHD in the rates in the collective bargaining agreement (CBA) governing the classification.

Union Average Rate Identifiers

The UAVG identifier indicates that no single rate prevailed for those classifications, but that 100% of the data reported for the classifications reflected union rates. EXAMPLE: UAVG-OH-0010 01/01/2024. UAVG indicates that the rate is a weighted union average rate. OH indicates the State of Ohio. The next number, 0010 in the example, is an internal number used in producing the wage determination. The date, 01/01/2024 in the example, indicates the date the wage determination was updated to reflect the most current union average rate.

A UAVG rate will be updated once a year, usually in January, to reflect a weighted average of the current rates in the collective bargaining agreements on which the rate is based.

Survey Rate Identifiers

The ⿰SU⿰ identifier indicates that either a single non-union rate prevailed (as defined in 29 CFR 1.2) for this classification in the survey or that the rate was derived by

computing a weighted average rate based on all the rates reported in the survey for that classification. As a weighted average rate includes all rates reported in the survey, it may include both union and non-union rates. Example: SUFL2022-007 6/27/2024. SU indicates the rate is a single non-union prevailing rate or a weighted average of survey data for that classification. FL indicates the State of Florida. 2022 is the year of the survey on which these classifications and rates are based. The next number, 007 in the example, is an internal number used in producing the wage determination. The date, 6/27/2024 in the example, indicates the survey completion date for the classifications and rates under that identifier.

 wage rates typically remain in effect until a new survey is conducted. However, the Wage and Hour Division (WHD) has the discretion to update such rates under 29 CFR 1.6(c)(1).

State Adopted Rate Identifiers

The identifier indicates that the classifications and prevailing wage rates set by a state (or local) government were adopted under 29 C.F.R 1.3(g)-(h). Example: SAME2023-007 01/03/2024. SA reflects that the rates are state adopted. ME refers to the State of Maine. 2023 is the year during which the state completed the survey on which the listed classifications and rates are based. The next number, 007 in the example, is an internal number used in producing the wage determination. The date, 01/03/2024 in the example, reflects the date on which the classifications and rates under the identifier took effect under state law in the state from which the rates were adopted.

WAGE DETERMINATION APPEALS PROCESS

1) Has there been an initial decision in the matter? This can be:

a) a survey underlying a wage determination
b) an existing published wage determination
c) an initial WHD letter setting forth a position on a wage determination matter
d) an initial conformance (additional classification and rate) determination

On survey related matters, initial contact, including requests for summaries of surveys, should be directed to the WHD Branch of Wage Surveys. Requests can be submitted via email to davisbaconinfo@dol.gov or by mail to:

Branch of Wage Surveys
Wage and Hour Division
U.S. Department of Labor
200 Constitution Avenue, N.W.
Washington, DC 20210

Regarding any other wage determination matter such as conformance decisions, requests for initial decisions should be directed to the WHD Branch of Construction Wage Determinations. Requests can be submitted via email to BCWD-Office@dol.gov or by mail to:

Branch of Construction Wage Determinations
Wage and Hour Division
U.S. Department of Labor
200 Constitution Avenue, N.W.
Washington, DC 20210

2) If an initial decision has been issued, then any interested party (those affected by the action) that disagrees with the decision can request review and reconsideration from the Wage and Hour Administrator (See 29 CFR Part 1.8 and 29 CFR Part 7). Requests for review and reconsideration can be submitted via

email to dba.reconsideration@dol.gov or by mail to:
Wage and Hour Administrator
U.S. Department of Labor
200 Constitution Avenue, N.W.
Washington, DC 20210
The request should be accompanied by a full statement of the interested party's position and any information (wage payment data, project description, area practice material, etc.) that the requestor considers relevant to the issue.

3) If the decision of the Administrator is not favorable, an interested party may appeal directly to the Administrative Review Board (formerly the Wage Appeals Board). Write to:
Administrative Review Board
U.S. Department of Labor
200 Constitution Avenue, N.W.
Washington, DC 20210.
==========
END OF GENERAL DECISION
"

USDA FOREST SERVICE
PACIFIC NORTHWEST REGION

FIRE PROTECTION AND SUPPRESSION

1. Fire Period and Closed Season

Specific fire prevention measures are listed below and shall be effective for the period April 1 to October 31 of each year. The Forest Service may change the dates of said period by advance written notice if justified byunusual weather or other conditions. Required tools and equipment shall be kept currently in serviceable condition and immediately available for initial attack on fires.

2. Fire Plan

Before starting any operations on the project, the Contractor, Permittee, Licensee, or Purchaser, hereinafter referred to as the "Contractor," shall prepare a fire plan in cooperation with the Contracting Officer providing for the prevention and control of fires in the project area.

The Contractor shall certify compliance with fire protection and suppression requirements before beginning operations during the fire period and closed season, and shall update such certification when operations change

3. Substitute Measures

The Contracting Officer may by written notice authorize substitute measures or equipment or may waive specific requirements during periods of low fire danger.

4. Emergency Measures

The Forest Service may require emergency measures, including the necessary shutting down of equipment or portions of operations in the project area during periods of fire emergency created by hazardous climatic conditions.

5. Fire Control

The Contractor shall, independently and in cooperation with the Forest Service, take all reasonable action to prevent and suppress fires in the project area. Independent initial action shall be prompt and shall include the use of all personnel and equipment available in the project area.

For the purpose of fighting forest fires on or in the vicinity of the project which are not caused by the Contractor's operations, the Contractor shall place employees and equipment temporarily at the disposal of the Forest Service. Any individual hired by the Forest Service will be employed in accordance with the Interagency Pay Plan for Emergency Firefighters. The Forest Service will compensate the Contractor for equipment rented at fire fighting

equipment rates common in the area, or at prior agreed to rates.

6. Compliance with State Forest Laws

Listing of specific fire precautionary measures herein is not intended to relieve the Contractor in any way from compliance with the State Fire Laws covering fire prevention and suppression equipment, applicable to operations under this contract, permit or license.

7. Fire Precautions

Specific fire precautionary measures are as follows:

a. Smoking and Open Fires

Smoking and fires shall be permitted only at the option of the Contractor. The Contractor shall not allow open fires on the project area without advance permission in writing from Forest Service.

Unless restricted by State Law or Federal Regulation, smoking shall be permitted only in such portions of the project area that are free of flammable material. Smokers shall sit down to smoke in such a position that any burning material will fall within a cleared area, and shall extinguish and press out in mineral soil all burning material before leaving the cleared area.

b. Fire Extinguishers and Equipment on Trucks, Tractors, etc.

All power-driven equipment operated by the Contractor on National Forest land, except portable fire pumps, shall be equipped with one fire extinguisher having a UL rating of at least 5 BC, and one "D" handled or long handled round point shovel, size "0" or larger. In addition, each motor patrol, truck and passenger-carrying vehicle shall be equipped with a double-bit axe or Pulaski, 3-1/2 pounds or larger.

Equipment shall be kept in a serviceable condition and shall be readily available.

c. Power Saws

Each gasoline power saw operator shall be equipped with a pressurized chemical fire extinguisher of not less than 8-ounce capacity by weight, and one long-handled round point shovel, size "0" or larger. The extinguisher shall be kept in possession of the saw operator at all times. The shovel shall be accessible to the operator within 1 minute.

d. Extinguishers

One refill for each type or one extra extinguisher sufficient to replace each size extinguisher required on equipment shall be safely stored in the fire tool box or other agreed upon place on the project area that is protected and readily available.

e. Spark Arresters and Mufflers

Each internal combustion engine shall be equipped with a spark arrester meeting either (1) USDA Forest Service Standard 5100-1a, or (2) appropriate Society of Automotive Engineers (SAE) recommended practice J335(b) and J350(a) as now or hereafter amended unless it is:

(1) Equipped with a turbine-driven exhaust supercharger such as the turbocharger. There shall be no exhaust bypass

(2) A passenger-carrying vehicle or light truck, or medium truck up to 40,000 GVW, used on roads and equipped with a factory-designedmuffler complete with baffles and an exhaust system in good working condition.

(3) A heavy duty truck, such as a dump or log truck, or other vehicleused for commercial hauling, used only on roads and equipped with a factory designed muffler and with a vertical stack exhaust system extending above the cab.

Exhaust equipment described in this subsection, including spark arresters and mufflers, shall be properly installed and constantly maintained in serviceable condition.

f. Emergency Fire Precautions

The Contractor shall restrict operations in accordance with the Industrial Fire Precaution Levels listed below. The Forest Service may change the Industrial Fire Precaution Levels to other values upon revision of the National Fire Danger Rating System and may change the specific Industrial Fire Precaution Levels when such changes are necessary for the protection of the National Forest. When sent to the Contractor, the revised Industrial Fire Precaution Levels will supersede the attached levels

INDUSTRIAL FIRE PRECAUTIONS SCHEDULE
INDUSTRIAL FIRE PRECAUTION (IFPL)

LEVEL

I. **Closed season -** Fire precaution requirements are in effect. A fire watch/security is required at this and all higher levels unless otherwise waived.

II. **Partial hootowl -** The following may operate only between the hours of 8 p.m. and 1 p.m., local time:

a. power saws, except at loading sites;
b. cable yarding;
c. blasting;
d. welding or cutting of metal.

III. **Partial shutdown** - The following shall be prohibited except as indicated:

Cable yarding - except that gravity operated logging systems employing non-motorized carriages may be operated between the hours of 8 p.m. and 1 p.m., local time, when all block and moving lines, except the line between the carriage and the chokers, are suspended 10 feet above the ground;

Power saws - except power saws may be used at loading sites and on tractor/skidder operations between the hours of 8 p.m. and 1 p.m., local time.

In addition, the following are permitted between the hours of 8 p.m. and 1 p.m., local time:

a. tractor/skidder operations;
b. mechanized loading and hauling of any product or material;
c. blasting;
d. welding or cutting of metal;
e. any other spark-emitting operation not specifically mentioned.

IV. **General shutdown** - All operations are prohibited.

The following definitions shall apply to these Industrial Fire Precaution Levels:

Cable yarding systems: A yarding system employing cables and winches in a fixed position.

Closed season (Fire Precautionary Period): That season of the year when a fire hazard exists as declared by the responsible agency official.

Contracting Officer: The person executing the contract, permit or license on behalf of the Government and includes that person's designated representative, acting within the limits of their authority or the duly appointed successor to the individuals.

Loading sites/woods site/project area: A place where any product or material (including but not limited to logs, firewood, slash, soil, rock, poles, posts, etc.) is placed in or upon a truck or other vehicle

Low hazard area: Means any area where the responsible agency representative (WDNR, ORF, BIA, BLM) determines the combination of elements reduces the probability of fire starting and/or spreading.

Tractor/skidder operations: include a harvesting operation, or portion of a harvesting operation, where tractors, skidders, or other harvesting equipment capable of constructing fireline, are actively yarding forest products and can quickly reach and effectively attack a fire start.

Waivers, written in advance, may be used for any and all activities. Activities for which waivers may be issued include, but are not limited to:

- **a.** mechanized loading and hauling;
- **b.** road maintenance such as sprinkling, graveling, grading and paving;
- **c.** cable yarding using gravity systems or suspended lines and blocks, or other yarding systems where extra prevention measures will significantly reduce the risk of fire;
- **d.** powers saws at loading sites or in felling and bucking where extra prevention measures will significantly reduce the risk of fire;
- **e.** maintenance of equipment (other than metal cutting and welding) or improvements such as structures, fences and powerlines.

Such waiver, or substitute precautions will prescribe measures to be taken by the Contractor to reduce the risk of ignition, and/or the spread of fire. The Contracting Officer shall consider site specific weather factors, fuel conditions, and specific operations that result in less risk of fire ignition and/or spread than contemplated when precaution level was predicted. Consideration shall also be given to measures that reduce the precaution levels above. The Contractor shall assure that all conditions of such waivers or substitute precautions are met.

The Contractor shall obtain the predicted Industrial Fire Precaution Level daily, prior to the start of work, from the appropriate Ranger District headquarters. If predictions made after 6:00 p.m., local time, are significantly different than the original prediction, the Forest Service will inform the Contractor when changes in restrictions or industrial precautions are made.

NOTE: The IFPL system does not apply on lands protected by ODF east of the summit of the Cascades.

Where hauling involves transit through more than one shutdown/regulated use area, the precaution level at the woods loading site shall govern the level of haul restriction, unless otherwise prohibited by other than industrial precaution level system.

8. Fire Tools

The Contractor shall furnish serviceable fire fighting tools in a readily accessible fire tool box or compartment of sound construction with a hinged lid and hasp so arranged that the box can be secured or sealed. The box shall be red and marked "Fire Tools" in letters one inch high. It shall contain a minimum of:

a. 2 axes or Pulaskis with a 32-inch handle;

b. 3 adze eye hoes. One Pulaski may be substituted for 1 adze eye hoe;

c. 3 long-handled, round point shovels, size "0" or larger.

9. Fire Security

When the Industrial Fire Precautions Level is "I" or higher, unless a waiver is granted, the Contractor shall designate a person who shall perform fire security services listed below on the project area and vicinity. The designated person shall be capable of operating the Contractor's communications and fire fighting equipment specified in the contract, excluding helicopters, and of directing the activities of the Contractor's personnel on forest fires. In lieu of having the designated person perform the required supervisory duties, the Contractor may provide another person meeting the qualifications stated above to direct the activities of Contractor's personnel and equipment during all fire fighting activities.

Services described shall be for at least 1 hour from the time the Contractor's operations are shut down. For the purposes of this provision, personnel servicing equipment, and their vehicles, who are not engaged in cutting or welding metal are excluded.

Fire security services shall consist of moving throughout the operation area or areas constantly looking, reporting, and taking suppression action on any fires detected. Where possible, the designated person shall observe inaccessible portions of helicopter operating areas from vantage points within or adjacent to project area.

10 Blasting

.

Whenever the Industrial Fire Precaution Level is "II" or greater, a fire security person equipped with a long-handled, round point, No. "0" or larger, shovel, and a five-gallon backpack pump can filled with water will stay at location of blast for 1 hour after blasting is done. Blasting may be suspended by Forest Service in writing, in an area of high rate of spread and resistance to control.

Fuses shall not be used for blasting. Explosive cords shall not be used without written permission of Forest Service, which may specify conditions under which such explosives may be used and precautions to be taken.

USDA FOREST SERVICE
PACIFIC NORTHWEST REGION

FIRE PROTECTION AND SUPPRESSION

Additional Fire Precautionary Measure 1 - Tank Truck

11. The Contractor shall provide a tank truck or trailer, containing not less than 300 gallons of water, during yarding, loading, land clearing, right-of-way clearing and mechanical treatment of slash. A tank truck or trailer will not be required if powersaw falling and bucking is the only operation. Such tank truck or trailer shall be maintained in a serviceable condition and located within 10 minutes, round trip, from each project area during fire period and closed seasonFire Period and Closed Season.

The tank truck or trailer shall be equipped with a pump capable of discharging 20 gallons of water per minute, using a 1/4 inch nozzle tip, through a 50 foot length of rubber line hose. In addition, 500 feet of serviceable fabric jacket rubber lined hose of not less than 1 inch outside diameter, fitted with a nozzle capable of discharging a straight stream of 1/4 inch diameter and a spray pattern shall be immediately available for use. The tank, pump and at least 250 feet of hose and nozzle shall be connected and ready for use at all times.

If a trailer is used, it shall be equipped with a hitch to facilitate prompt movement. A serviceable tow vehicle shall be immediately available for attachment to the trailer and must meet the time requirements stated above. Such truck or trailer shall be equipped to operate for a minimum of 8 hours. Tank truck or trailer shall be available from the start of work to the end of the Fire Watch / Fire Security service.

USDA FOREST SERVICE
PACIFIC NORTHWEST REGION

FIRE PROTECTION AND SUPPRESSION

Additional Fire Precautionary Measure 2 - Communications

12. The contractor shall provide adequate two-way communication facilities to report a fire to Forest Service within 15 minutes of detection. FCC Regulations prohibit commercial use of Citizen Band (CB) radios. (CB's are not considered adequate two-way communications).

Such communications shall be operable during periods of operation of power-driven equipment, including the time fire security is required. Fire Period and Closed Season