INDEX OF DRAWINGS

SEQ NO.	SHEET NO.	TITLE
0	G-1	INDEX OF DRAWINGS
00	G-2	INDEX OF DRAWINGS
		VOL I
		CIVIL
1	C-1	PROJECT LOCATION MAP
2	C-2	DEMOLITION PLAN I
3	C-3	DEMOLITION PLAN II
4	C-4	DEMOLITION PLAN III
5	C-5	DEMOLITION PLAN IV
6	C-6	LAYOUT PLAN I
7	C-7	LAYOUT PLAN II
8	C-8	LAYOUT PLAN III
9	C-9	LAYOUT PLAN IV
10	C-10	GRADING PLAN I
11	C-11	GRADING PLAN II
12	C-12	GRADING PLAN III
13	C-13	GRADING PLAN IV
14	C-14	UTILITY PLAN I
15	C-15	UTILITY PLAN II
16	C-16	UTILITY PLAN III
17	C-17	UTILITY PLAN IV
18	C-18	PAVING DETAILS
19	C-19	MISCELLANEOUS DETAILS I
20	C-20	MISCELLANEOUS DETAILS II
21	C-21	MISCELLANEOUS DETAILS III
22	C-22	MISCELLANEOUS DETAILS IV
23	C-23	UTILITY DETAILS
		TURFING AND LANDSCAPING
24	L-1	LANDSCAPE PLAN I, BUILDING 2413
25	L-2	LANDSCAPE PLAN II, BUILDING 2420
26	L-3	LANDSCAPE PLAN III, BUILDING 2447
27	L-4	LANDSCAPE PLAN IV, BUILDING 2903
		ARCHITECTURAL
28	A-1	FIRE PROTECTION PLANS BUILDING 2903
29	A-2	BASEMENT FLOOR PLAN BUILDING 2903
30	A-3	FIRST FLOOR PLAN BUILDING 2903
31	A-4	SECOND & THIRD FLOOR PLANS BUILDING 2903
32	A-5	EXTERIOR ELEVATIONS BUILDING 2903
33	A-6	ROOF PLANS BUILDINGS 2903 & 2447
34	A-7	BASEMENT REFLECTED CEILING PLAN BUILDING 2903
35	A-8	FIRST, SECOND & THIRD REFLECTED CEILING PLAN BLDG 2903
36	A-9	WALL SECTIONS BUILDING 2903

SEQ NO.	SHEET NO.	TITLE
37	A-10	FIRE PROTECTION PLANS BUILDING 2447
38	A-11	BASEMENT FLOOR PLAN BUILDING 2447
39	A-12	FIRST FLOOR PLAN BUILDING 2447
40	A-13	SECOND & THIRD FLOOR PLANS BUILDING 2447
41	A-14	EXTERIOR ELEVATIONS BUILDING 2447
42	A-15	BASEMENT REFLECTED CEILING PLAN BUILDING 2447
43	A-16	FIRST, SECOND &THIRD REFLECTED CEILING PLAN BLDG 2447
44	A-17	WALL SECTIONS, BUILDINGS 2447, 2413 & 2420
45	A-18	FIRE PROTECTION PLANS, BUILDINGS 2413 & 2420
46	A-19	BASEMENT FLOOR PLAN, BUILDINGS 2413 & 2420
47	A-20	FIRST FLOOR PLAN, BUILDINGS 2413 & 2420
48	A-21	SECOND & THIRD FLOOR PLAN, BUILDINGS 2413 & 2420
49	A-22	EXTERIOR ELEVATIONS, BUILDINGS 2413 & 2420
50	A-23	ROOF PLAN, BUILDINGS 2413 & 2420
51	A-24	BASEMENT REFLECTED CEILING PLAN, BLDGS 2413 & 2420
52	A-25	1ST, 2ND & 3RD REFLECTED CEILING PL, BLDGS 2413 & 2420
53	A-26	EXTERIOR STAIR PLANS & SECTIONS
54	A-27	BUILDING ENTRY SECTIONS & DETAILS
55	A-28	INTERIOR WALL TYPES
56	A-29	ENLARGED PLANS & ELEVATIONS
57	A-30	ENLARGED PLANS & ELEVATIONS
58	A-31	ENLARGED PLANS & ELEVATIONS
59	A-32	ROOM FINISH SCHEDULE
60	A-33	ROOM FINISH SCHEDULE
61	A-34	ROOM FINISH SCHEDULE
62	A-35	DOOR & WINDOW SCHEDULE
63	A-36	DOOR DETAILS
64	A-37	DOOR DETAILS
65	A-38	MISCELLANEOUS DETAILS
66	A-39	MISCELLANEOUS DETAILS
		ASBESTOS AND LEAD-BASED PAINT
67	AL-1	ASBESTOS AND LEAD-BASED PAINT, BUILDING 2413
68	AL-2	ASBESTOS AND LEAD-BASED PAINT, BUILDING 2447
69	AL-3	ASBESTOS AND LEAD-BASED PAINT, BUILDING 2420
70	AL-4	ASBESTOS AND LEAD-BASED PAINT, BUILDING 2903
		STRUCTURAL
71	S-1	NOTES AND MISCELLANEOUS DETAILS
72	S-2	BASEMENT FLOOR PLAN AND ARMS ROOM DETAILS BLDG 2903
73	S-3	FIRST FLOOR PLAN BUILDING 2903
74	S-4	SECOND AND THIRD FLOOR PLAN BUILDING 2903
75	S-5	BASEMENT FLOOR PLANS BUILDINGS 2413 & 2420
76	S-6	FIRST FLOOR PLANS BUILDINGS 2413 & 2420
77	S-7	SECOND & THIRD FLOOR PLAN BLDGS 2413 & 2420

SEQ NO.	SHEET NO.	TITLE
78	S-8	BASEMENT FLOOR PLAN BLDG 2447
79	S-9	FIRST FLOOR PLANS BLDG 2447
80	S-10	SECOND & THIRD FLOOR PLAN BLDG 2447
81	S-11	STAIR PLANS AND SECTIONS
82	S-12	STAIR SECTIONS AND DETAILS
83	S-13	VESTIBULE FOUNDATION AND ROOF SECTIONS
84	S-14	MECHANICAL YARD, SUNSHADES AND MISCELLANEOUS DETAILS
85	S-15	FIRST FLOOR ARMS ROOM DETAILS
86	S-16	MISCELLANEOUS FRAMING DETAILS
		VOL II
		MECHANICAL
87	M-1	MECHANICAL SCHEDULES
88	M-2	LEGEND & SCHEDULES
89	M-3	BASEMENT FLOOR PLUMBING BUILDING 2413
90	M-4	1ST FLOOR PLUMBING BUILDING 2413
91	M-5	2ND & 3RD FLOOR PLUMBING BUILDING 2413
92	M-6	WASTE & VENT RISERS BUILDING 2413
93	M-7	COLD AND HOT WATER RISERS BUILDING 2413
94	M-8	BASEMENT HVAC BUILDING 2413
95	M-9	1ST FLOOR HVAC BUILDING 2413
96	M-10	2ND & 3RD FLOOR HVAC BUILDING 2413
97	M-11	BASEMENT HYDRONIC PIPING BUILDING 2413
98	M-12	1ST FLOOR HYDRONIC PIPING BUILDING 2413
99	M-13	2ND & 3RD FLOOR HYDRONIC PIPING BUILDING 2413
100	M-14	BOILER ROOM DETAILS BUILDING 2413
101	M-15	BASEMENT FLOOR PLUMBING BUILDING 2420
102	M-16	1ST FLOOR PLUMBING BUILDING 2420
103	M-17	2ND & 3RD FLOOR PLUMBING BUILDING 2420
104	M-18	WASTE & VENT RISERS BUILDING 2420
105	M-19	COLD & HOT WATER RISERS BUILDING 2420
106	M-20	BASEMENT FLOOR HVAC BUILDING 2420
107	M-21	1ST FLOOR HVAC BUILDING 2420
108	M-22	2ND & 3RD FLOOR HVAC BUILDING 2420
109	M-23	BASEMENT HYDRONIC PIPING BUILDING 2420
110	M-24	1ST FLOOR HYDRONIC PIPING BUILDING 2420
111	M-25	2ND & 3RD FLOOR HYDRONIC PIPING BUILDING 2420

SYM	D.O. NO.	ACTION	DATE	DESCRIPTION OF REVISION
			30APR96	REVISED AS-BUILT

ENGINEERING DIVISION
DESIGN BRANCH

U.S. ARMY ENGINEER DISTRICT, FORT WORTH
CORPS OF ENGINEERS
FORT WORTH, TEXAS

DESIGNED BY: W. ALFORD
DRAWN BY: W. ALFORD
REVIEWED BY: W. ALFORD
SUBMITTED BY: ED ADCOCK, CH., MIL. ENG. SECTION
ENGINEER:

FORT BLISS, TEXAS

ENLISTED BARRACKS W/O DINING FACILITIES II
PN 0036097

INDEX OF DRAWINGS

SOL. NO. DACA63-94-B-0067 DATED: FEB 1994
CONTR. NO. DACA63-94-C-0120
DRAWING NUMBER FB-QE
SHEET NO. G-1 OF 2
SEQUENCE NO. 0

CONTR. NO. DACA63-94-C-0120

CADD FILE NAME: DFBEB7NX

"DRAWING OF WORK AS BUILT"

Mon Jul 1 10:31:09 1996

INDEX OF DRAWINGS

SEQ NO.	SHEET NO.	TITLE
0	G-1	INDEX OF DRAWINGS
00	G-2	INDEX OF DRAWINGS
		MECHANICAL CONTINUED
112	M-26	BOILER ROOM DETAILS BUILDING 2420
113	M-27	BASEMENT & 1ST FLOOR PLUMBING BUILDING 2447
114	M-28	BASEMENT & 1ST FLOOR PLUMBING BUILDING 2447
115	M-29	2ND & 3RD FLOOR PLUMBING BUILDING 2447
116	M-30	WASTE & VENT RISERS BUILDING 2447
117	M-31	COLD & HOT WATER RISERS BUILDING 2447
118	M-32	PLUMBING RISERS BUILDING 2447
119	M-33	BASEMENT & 1ST FLOOR HVAC BUILDING 2447
120	M-34	BASEMENT & 1ST FLOOR HVAC BUILDING 2447
121	M-35	2ND & 3RD FLOOR HVAC BUILDING 2447
122	M-36	BASEMENT & 1ST FLOOR HYDRONIC PIPING BUILDING 2447
123	M-37	BASEMENT & 1ST FLOOR HYDRONIC PIPING BUILDING 2447
124	M-38	2ND & 3RD FLOOR HYDRONIC PIPING BUILDING 2447
125	M-39	BOILER ROOM DETAILS BUILDING 2447
126	M-40	BASEMENT & 1ST FLOOR PLUMBING BUILDING 2903
127	M-41	BASEMENT & 1ST FLOOR PLUMBING BUILDING 2903
128	M-42	2ND & 3RD FLOOR PLUMBING BUILDING 2903
129	M-43	WASTE & VENT RISERS BUILDING 2903
130	M-44	COLD & HOT WATER RISERS BUILDING 2903
131	M-45	PLUMBING RISERS BUILDING 2903
132	M-46	BASEMENT & 1ST FLOOR HVAC BUILDING 2903
133	M-47	BASEMENT & 1ST FLOOR HVAC BUILDING 2903
134	M-48	2ND & 3RD FLOOR HVAC BUILDING 2903
135	M-49	BASEMENT & 1ST FLOOR HYDRONIC PIPING BUILDING 2903
136	M-50	BASEMENT & 1ST FLOOR HYDRONIC PIPING BUILDING 2903
137	M-51	2ND & 3RD FLOOR HYDRONIC PIPING BUILDING 2903
138	M-52	BOILER ROOM DETAILS BUILDING 2903
139	M-53	PLUMBING DETAILS
140	M-54	PLUMBING DETAILS
141	M-55	HVAC DETAILS
142	M-56	HVAC DETAILS
143	M-57	HVAC DETAILS
144	M-58	SEISMIC DETAILS
145	M-59	CONTROLS LEGEND
146	M-60	CONTROL DIAGRAMS
147	M-61	EVAPORATIVE COOLER CONTROL DIAGRAM
148	M-62	HOT WATER HEATING SYSTEM CONTROL DIAGRAM I
149	M-63	HOT WATER HEATING SYSTEM CONTROL DIAGRAM II
150	M-64	HOT WATER HEATING SYSTEM CONTROL DIAGRAM III
151	M-65	BASEMENT FIRE PROTECTION PLAN BUILDING ~~2420~~ 2413
152	M-66	1ST FLOOR FIRE PROTECTION PLAN BUILDING ~~2420~~ 2413
153	M-67	2ND 3RD FLOOR FIRE PROTECTION PLAN BUILDING ~~2420~~ 2413

SEQ NO.	SHEET NO.	TITLE
154	M-68	BASEMENT FIRE PROTECTION PLAN BUILDING 2420
155	M-69	1ST FLOOR FIRE PROTECTION PLAN BUILDING 2420
156	M-70	2ND & 3RD FLOOR FIRE PROTECTION PLAN BUILDING 2420
157	M-71	BASEMENT & 1ST FLOOR FIRE PROTECTION PLAN BLDG 2447
158	M-72	BASEMENT & 1ST FLOOR FIRE PROTECTION PLAN BLDG 2447
159	M-73	2ND & 3RD FLOOR FIRE PROTECTION PLAN BLDG 2447
160	M-74	BASEMENT & 1ST FLOOR FIRE PROTECTION PLAN BLDG 2903
161	M-75	BASEMENT & 1ST FLOOR FIRE PROTECTION PLAN BLDG 2903
162	M-76	2ND & 3RD FLOOR FIRE PROTECTION PLAN BLDG 2903
		ELECTRICAL
163	EU-1	ELECTRICAL SITE PLAN BUILDING 2413
164	EU-2	ELECTRICAL SITE PLAN BUILDING 2420
165	EU-3	ELECTRICAL SITE PLAN BUILDING 2447
166	EU-4	ELECTRICAL SITE PLAN BUILDING 2903
167	EU-5	ELECTRICAL EXTERIOR DETAILS
168	EU-6	ELECTRICAL EXTERIOR DETAILS
169	E-1	ELECTRICAL INTERIOR LEGEND & LIGHTING FIXTURE SCHEDULE
170	E-2	TYPICAL MODULE (LIGHTING, POWER, FIRE ALARM AND COMM)
171	E-3	BASEMENT FLOOR LIGHTING PLAN, BUILDING 2903
172	E-4	BASEMENT FLOOR POWER PLAN, BUILDING 2903
173	E-5	BASEMENT FLOOR PLAN-FIRE ALARM & COMM, BLDG 2903
174	E-6	FIRST FLOOR LIGHTING PLAN, BUILDING 2903
175	E-7	FIRST FLOOR POWER PLAN, BUILDING 2903
176	E-8	FIRST FLOOR PLAN-FIRE ALARM & COMM BUILDING 2903
177	E-9	SECOND & THIRD FLOOR LIGHTING PLAN BUILDING 2903
178	E-10	SECOND & THIRD FLOOR POWER PLAN BUILDING 2903
179	E-11	SECOND & THIRD FLOOR PLAN-FIRE ALARM & COMM BLDG 2903
180	E-12	POWER AND FIRE ALARM RISER DIAGRAM, BLDG. 2903
181	E-13	TELEPHONE RISER DIAGRAM, BUILDING 2903
182	E-14	CABLE TV & PUBLIC ADDRESS RISER DIAGRAM, BLDG 2903
183	E-15	ARMS ROOM DETAIL & MOTION DETECTION RISERS, BLDGS 2903
		2447, 2420 AND 2413
184	E-16	PANELBOARD SCHEDULE, BUILDING 2903
185	E-17	BASEMENT FLOOR LIGHTING PLAN, BLDG 2447
186	E-18	BASEMENT FLOOR POWER PLAN, BUILDING 2447
187	E-19	BASEMENT FLOOR PLAN-FIRE ALARM & COMM, BLDG 2447
188	E-20	FIRST FLOOR LIGHTING PLAN, BUILDING 2447
189	E-21	FIRST FLOOR POWER PLAN, BUILDING 2447
190	E-22	FIRST FLOOR PLAN,-FIRE ALARM & COMM, BLDG 2447
191	E-23	SECOND & THIRD FLOOR LIGHTING PLAN BUILDING 2447
192	E-24	SECOND & THIRD FLOOR POWER PLAN BUILDING 2447
193	E-25	SECOND & THIRD FLOOR PLAN-FIRE ALARM & COMM BLDG 2447
194	E-26	POWER AND FIRE ALARM RISER DIAGRAM, BUILDING 2447
195	E-27	TELEPHONE RISER DIAGRAM, BUILDING 2447
196	E-28	CABLE TV & PUBLIC ADDRESS RISER DIAGRAM BLDG 2447

SEQ NO.	SHEET NO.	TITLE
197	E-29	PANELBOARD SCHEDULE, BUILDING 2447
198	E-30	BASEMENT FLOOR LIGHTING PLAN, BUILDINGS 2420 & 2413
199	E-31	BASEMENT FLOOR POWER PLAN, BUILDINGS 2420 & 2413
200	E-32	BASEMENT FL PL,-FIRE ALARM & COMM BLDGS 2420 & 2413
201	E-33	FIRST FLOOR LIGHTING PLAN, BUILDINGS 2420 & 2413
202	E-34	FIRST FLOOR POWER PLAN, BUILDINGS 2420 & 2413
203	E-35	FIRST FLOOR PLAN-FIRE ALARM & COMM, BLDG 2420 & 2413
204	E-36	SECOND AND THIRD FLOOR LIGHTING PLAN, BLDGS 2420 & 2413
205	E-37	SECOND AND THIRD FLOOR POWER PLAN, BLDGS 2420 & 2413
206	E-38	2ND & 3RD FL PL-FIRE ALARM & COMM, BLDGS 2420 & 2413
207	E-39	POWER & FIRE ALARM RISER DIAGRAM, BLDGS. 2420 & 2413
208	E-40	TELEPHONE RISER DIAGRAM, BUILDINGS 2420 AND 2413
209	E-41	CABLE TV & PUBLIC ADDRESS RISER DIAG, BLDGS 2420 & 2413
210	E-42	PANELBOARD SCHEDULE, BUILDINGS 2420 AND 2413
211	E-43	PANELBOARD SCHEDULE, BUILDINGS 2420 AND 2413

SYM	D.O. NO.	ACTION	DATE	DESCRIPTION OF REVISION
			30APR96	REVISED AS-BUILT

ENGINEERING DIVISION
DESIGN BRANCH

U.S. ARMY ENGINEER DISTRICT, FORT WORTH
CORPS OF ENGINEERS
FORT WORTH, TEXAS

DESIGNED BY: W. ALFORD
DRAWN BY: W. ALFORD
REVIEWED BY: W. ALFORD
SUBMITTED BY: ED ADCOCK, CH., MIL. ENG. SECTION
ENGINEER:

FORT BLISS, TEXAS

ENLISTED BARRACKS W/O DINING FACILITIES II
PN 0036097

INDEX OF DRAWINGS

SOL. NO. DACA63-94-B-0067 | DATED: FEB 1994
CONTR. NO. DACA63-94-C-0120
DRAWING NUMBER: FB-QE
SHEET NO. G-2 OF 2
SEQUENCE NO. 00

CADD FILE NAME: DFBEB7N2

"DRAWING OF WORK AS BUILT"

CONTR. NO. DACA63-94-C-0120

Mon Jul 1 10:42:15 1996

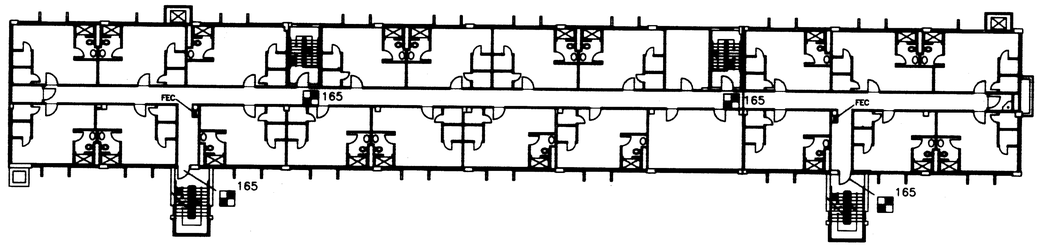

SECOND AND THIRD FLOOR PLAN BUILDING 2447 SCALE: 1/16 " = 1'-0"

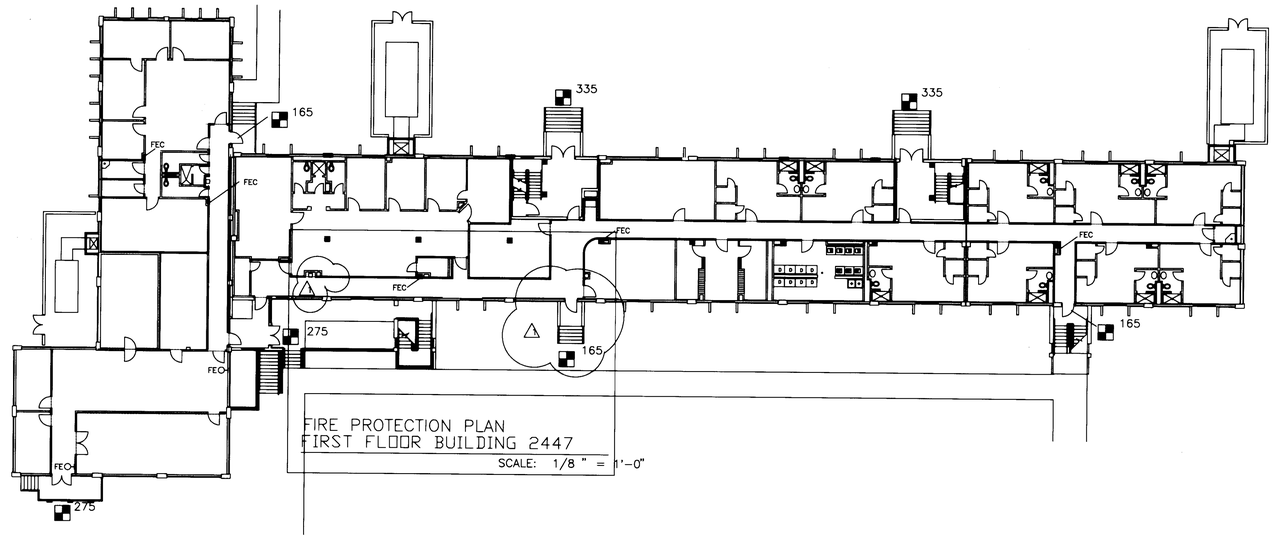

FIRE PROTECTION PLAN
FIRST FLOOR BUILDING 2447
SCALE: 1/8 " = 1'-0"

FIRST FLOOR PLAN BUILDING 2447 SCALE: 1/16 " = 1'-0"

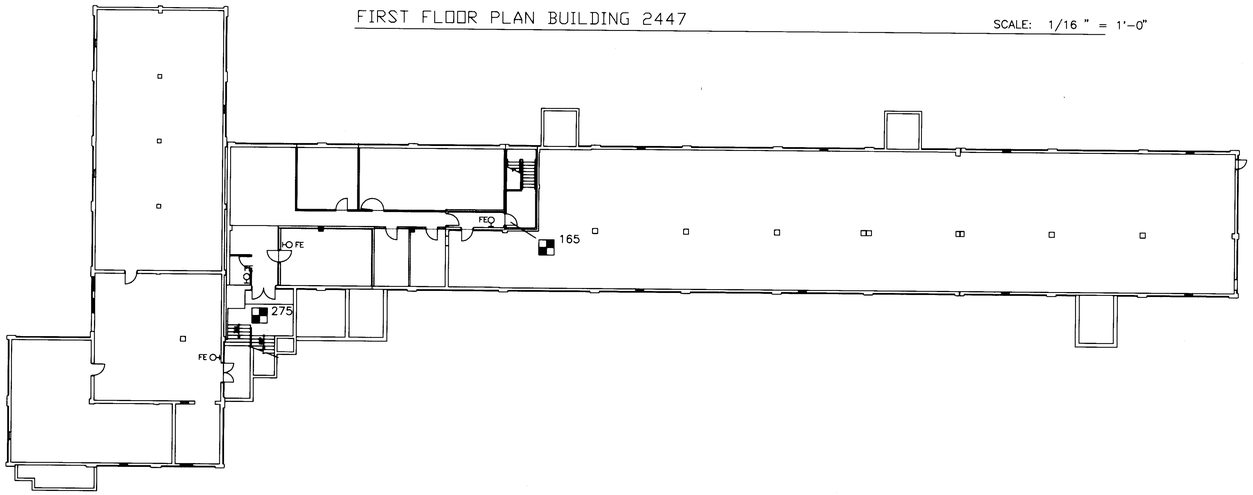

BASEMENT FLOOR PLAN BUILDING 2447 SCALE: 1/16 " = 1'-0"

FIRE PROTECTION LEGEND/NOTES

OCCUPANCY TYPE — MIXED: NEW HOTELS AND DORMITORIES, NEW BUSINESS (NFPA 101, 1991 CODE). 1 HOUR SEPARATION REQUIRED.

MAXIMUM TRAVEL DISTANCE ALLOWED — 200 FEET

MAXIMUM TRAVEL DISTANCE AS DESIGNED — 120 FEET

ALL BUILDINGS WILL INCLUDE AN AUTOMATIC SPRINKLER SYSTEM, REFER TO MECHANICAL DRAWINGS FOR LAYOUT.

REFER TO ELECTRICAL DRAWINGS FOR SMOKE AND HEAT DETECTORS, FIRE ALARM PULL STATIONS, FIRE ALARM SIGNALS, AND LAYOUT.

CONSTRUCTION TYPE: II-N

STRUCTURE: CONCRETE FRAME WITH STRUCTURAL CONCRETE FLOORS AND ROOF.

165 — MAXIMUM EGRESS CAPACITY (NFPA 101)

ONE-HOUR WALL OR PARTITION. ACTUAL WALL CONSTRUCTION MAY EXCEED IT. DOORS IN THESE WALLS SHALL BE RATED 60 MINUTES.

ONE HALF HOUR WALL OR PARTITION. ACTUAL WALL CONSTRUCTION MAY EXCEED IT. DOORS IN THESE WALLS SHALL BE RATED 45 MINUTES.

ONE HALF HOUR WALL OR PARTITION. ACTUAL WALL CONSTRUCTION MAY EXCEED IT. DOORS IN THESE WALLS SHALL BE RATED 20 MINUTES.

FEC — RECESSED FIRE EXTINGUISHER CABINET

FE — SURFACE MOUNTED FIRE EXTINGUISHER

SYM	D.O. NO.	ACTION	DATE	DESCRIPTION OF REVISION
			30APR96	REVISED AS-BUILT
2	G1546	PM	18OCT94	ADDED BUILDING ENTRANCE AND EWC

ENGINEERING DIVISION
DESIGN BRANCH

U.S. ARMY ENGINEER DISTRICT, FORT WORTH
CORPS OF ENGINEERS
FORT WORTH, TEXAS

DESIGNED BY: A. FINE
DRAWN BY: E. GODWIN
REVIEWED BY: J. BRISTOW

FORT BLISS, TEXAS

ENLISTED BARRACKS W/O DINING FACILITIES II
FY 92 PN 0036097

FIRE PROTECTION PLANS
BUILDING 2447

SUBMITTED BY:
JESSE H. KIDD, A.I.A.
CHIEF, ARCHITECTURAL SECTION

SOL. NO. DACA63-94-B-0067 DATED: FEB 1994
CONTR. NO. DACA63-94-C-0120
DRAWING NUMBER FB-QE
SHEET NO. A-10 of 39
SEQUENCE NO. 37

CADD FILE NAME: eb7fpp2.dgn
SUPERSEDES SHEET A-10

"DRAWING OF WORK AS BUILT"

CONTR. NO. DACA63-94-C-0120

Tue Jul 2 10:42:59 1996

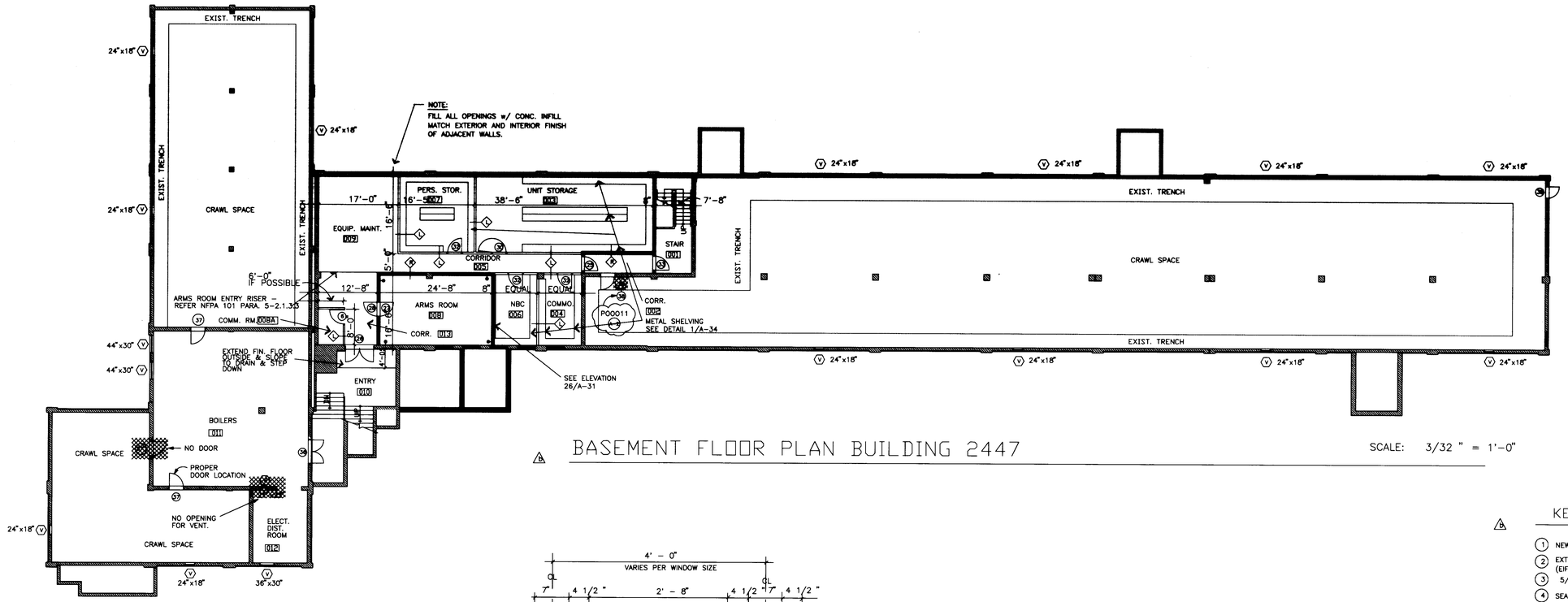

BASEMENT FLOOR PLAN BUILDING 2447

SCALE: 3/32 " = 1'-0"

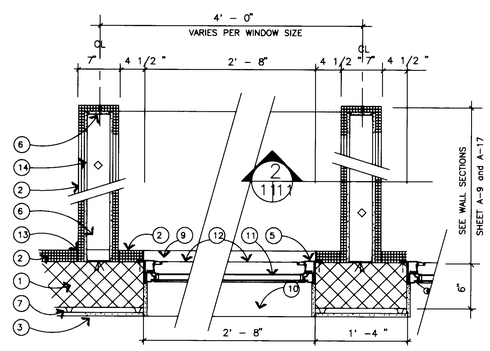

3 DETAIL
SCALE : 1 1/2 " = 1'-0"

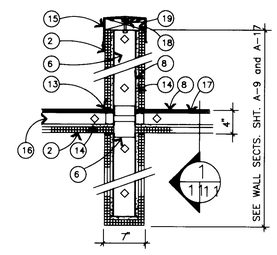

2 DETAIL
SCALE : 1 1/2 " = 1'-0"

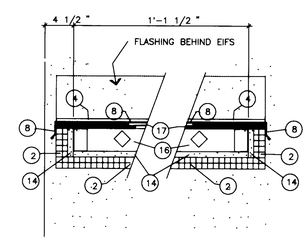

1 DETAIL
SCALE : 3 " = 1'-0"

KEY NOTES

1. NEW 6" CMU
2. EXTERIOR INSUL. & FINISH SYSTEM (EIFS)
3. 5/8 " GYPSUM BOARD
4. SEALANT
5. ALUM. WINDOW FRAME
6. 4" METAL STUDS
7. 7/8 " FURRING CHANNELS
8. FLASHING
9. SILL FLASHING
10. ALUM. SILL (EXTRUDED-1/8" THICK)
11. INSUL. GLASS AS SPECIFIED
12. INSECT SCREEN
13. BACKER ROD & CAULKING
14. 1/2 " GYPBOARD SHEATHING
15. PEAKED COPING
16. 2" METAL STUDS
17. 1/2 " EXTERIOR GRADE PLYWOOD
18. WOOD BLOCKING
19. ATTACH AS REQUIRED

DEMOLITION NOTES:

1. CONTRACTOR SHALL INCLUDE IN HIS PROPOSAL ALL ITEMS OF DEMOLITION REQUIRED FOR THE INSTALLATION OF NEW ITEMS DETAILED OR SCHEDULED ON THE DRAWINGS AND OR SPECIFIED.
2. IT IS NOT THE INTENT OF THE DRAWINGS TO DEMOLISH, CORE OR OTHERWISE DISTURB ANY STRUCTURAL LOAD BEARING MEMBER. IF CONDITIONS ARISE REQUIRING SUCH ACTION OBTAIN PERMISSION OF CONTRACTING OFFICER PRIOR TO TAKING SUCH ACTION.
3. AFTER DEMOLITION ITEMS ARE COMPLETE RESTORE REMAINING FLOOR, WALL, AND CEILING SURFACES TO THEIR ORIGINAL CONDITION READY TO RECEIVE NEW FINISHES AS SCHEDULED, DETAILED, AND SPECIFIED BY REMOVING ALL EXPOSED HANGERS, ANCHORS, TIES, MORTAR, SEALANT, CAULKING, PAINT BUILD-UP, ETC., AND CLEANING SURFACES TO PROVIDE A SURFACE ACCEPTABLE TO RECEIVE NEW FINISHES. FILL ALL NAIL, SCRE Y, AND BOLT HOLES AND FINISH SURFACE TO RECEIVE NEW FINISH.S.
4. ALL MASONRY INFILL PANELS, AREAS WHERE DOORS, WINDOWS,ETC. ARE TO BE CLOSED, SHALL BE TOOTHED INTO EXISTING MASONRY WORK. BRING FINISH ON NEW MASONRY SURFACES UP TO THAT OF SURROUNDING SURFACES PRIOR TO APPLICATION OF NEW WALL FINISHES.
5. PATCH HOLES IN EXISTING MASONARY WALLS WHERE PIPES, DUCTS, GRILLES, LOUVERS, CONDUIT, ETC., HAVE BEEN REMOVED IN WALLS TO REMAIN BY REMOVING FULL MASONRY UNITS AND TOOTHING NEW MASONRY INTO EXISTING.
6. DIMENSIONS ARE BASED UPON AS-BUILT DRAWINGS. IT SHALL BE THE RESPONSIBILITY OF THE CONTRACTOR TO FIELD VERIFY AS-BUILT CONDITIONS AND TO NOTIFY THE CORPS OF ENGINEERS OF ANY DISCREPANCIES BETWEEN PLANS AND AS-BUILT CONDITIONS.
7. EXISTING HOLES THRU SLABS REQUIRING FILLING AND/OR PATCH WORK SHALL BE COMPLETED ON BOTH SURFACES OF THE SLAB (FLOOR AND CEILING SIDE). THE PATCHWORK SHALL BE LEVEL AND FLUSH WITH THE EXISTING SURFACES PRIOR TO RECEIVING NEW FINISH SURFACES AS SPECIFIED. FILL ALL HOLES IN SLABS LEFT BY REMOVAL OF PIPING, CONDUITS, AND SLEEVES. FILL AROUND NEW HOLES THROUGH SLABS AFTER PIPING AND CONDUITS ARE INSTALLED TO PROVIDE WATERTIGHT SEAL AND PREVENT WATER FROM MIGRATING TO FLOOR BELOW. PRESERVE INTEGRITY OF FIRE RATING OF SYSTEM PENETRATED.
8. RESTORE EXISTING CONCRETE SURFACES THAT ARE TO REMAIN EXPOSED BY PATCHING EXISTING SPALLED OR DAMAGED SURFACES AND SURFACES DAMAGED BY DEMOLITION OPERATIONS. USE MATERIALS FOR RESTORATION OF SURFACES THAT ARE COMPATIBLE TO SURFACES PATCHED FOR SPALLED OR DAMAGED GROUT MANUFACTURED FOR THIS CONDITION. WHERE DAMAGE OF CMU NEEDS REPAIR - REMOVE DAMAGED UNIT AND REPLACE.
9. UNLESS NOTED OTHERWISE ALL EXISTING CEILINGS ARE EXPOSED AND/OR PAINTED CONCRETE PAN JOIST AND BEAMS.
10. REMOVE ALL MIRRORS, BULLETIN BOARDS, TACKBOARDS, WOOD STRIPS, ETC. FROM WALLS TO REMAIN. THEY WILL BECOME PROPERTY OF CONTRACTOR TO DISPOSE OF AS HE MAY REQUIRE.
11. ALL ASBESTOS REMOVAL ACCORDING TO ASBESTOS REMOVAL DRAWINGS.
12. ALL PLUMBING, MECHANICAL, AND ELECTRICAL EQUIPMENT, MATERIALS AND FIXTURES SHALL BE DEMOLISHED AND DISPOSED OF BY THE CONTRACTOR UNLESS NOTED OTHERWISE BY THE CONTRACTING OFFICER.
13. ALL INTERIOR METAL RAILINGS TO REMAIN SHALL BE STRIPPED TO BARE METAL AND PREPARED TO RECEIVE NEW PAINT AS SPECIFIED.
14. REMOVE ALL EXISTING BUILT-UP ROOFING, LIGHT WEIGHT CONCRETE TOPPING AND RIGID INSULATION,COMPLETE WITH ALL ROOFING ACCESSORIES. REMOVE ALL EXISTING ROOF FLASHING, GRAVEL GUARDS, GUTTERS, DOWNSPOUTS, AND ROOF HATCH. REMOVE EXISTING CONCRETE CURBS TO LEVEL OF EXISTING CONCRETE ROOF STRUCTURE, WHERE OPENINGS ARE NOT BEING RE-USED FOR NEW MECHANICAL ITEMS, CLOSE OPENINGS WITH NEW CONCRETE SLAB PER STRUCTURAL DRAWINGS. CONTRACTOR SHALL LOCATE ALL SALVAGED ITEMS AS DIRECTED BY THE CONTRACTING OFFICER.

LEGEND

- EXISTING REINF. CONC. OR CMU WALL TO REMAIN
- NEW DRYWALL - SEE WALL TYPES ON SHT. A-28
- NEW CMU WALL - SEE WALL TYPES ON SHT. A-28
- NEW CONCRETE INFILL AS REQUIRED
- EXISTING COLUMN
- PORTABLE FIRE EXTINGUISHER
- RECESSED FIRE EXTINGUISHER
- (19) DOOR DESIGNATION
- (A) WALL TYPE DESIGNATION
- (B) WINDOW & LOUVER DESIGNATION
- 103 ROOM DESIGNATION

NORTH

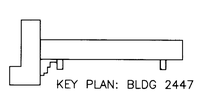

KEY PLAN: BLDG 2447

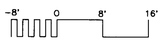

SCALE: 3/32 " = 1'-0"

SYM	D.O. NO.	ACTION	DATE	DESCRIPTION OF REVISION
			30APR96	REVISED AS-BUILT
		P00002	27MAY94	END BUILDING WALLS REMAIN (NO DEMO)
		P00011	26JUN95	CHANGE DOOR & FRAME FROM A 39 TO A 38.
1		AM#0005	14APR94	REVISED DEMOLITION NOTE 12
5		AM#0002	10MAR94	ADDED DETAILS OF SOLAR FINS

ENGINEERING DIVISION
DESIGN BRANCH

U.S. ARMY ENGINEER DISTRICT, FORT WORTH
CORPS OF ENGINEERS
FORT WORTH, TEXAS

DESIGNED BY:

DRAWN BY: A. FINE

REVIEWED BY: J. BRISTOW

SUBMITTED BY:

JESSE H. KIDD, A.I.A.
CHIEF, ARCHITECTURAL SECTION

FORT BLISS, TEXAS

ENLISTED BARRACKS W/O DINING FACILITIES II
FY 92 PN 0036097

BASEMENT FLOOR PLAN
BUILDING 2447

SOL. NO. DACA63-94-B-0067 DATED: FEB 1994
CONTR. NO. DACA63-94-C-0120
SEQUENCE NO. 38
DRAWING NUMBER FB-QE
SHEET NO. A-1 1 OF 39

CADD FILE NAME: eb7fp047.dgn

"DRAWING OF WORK AS BUILT"

CONTR. NO. DACA63-94-C-0120

Tue Jul 2 10:54:27 1996

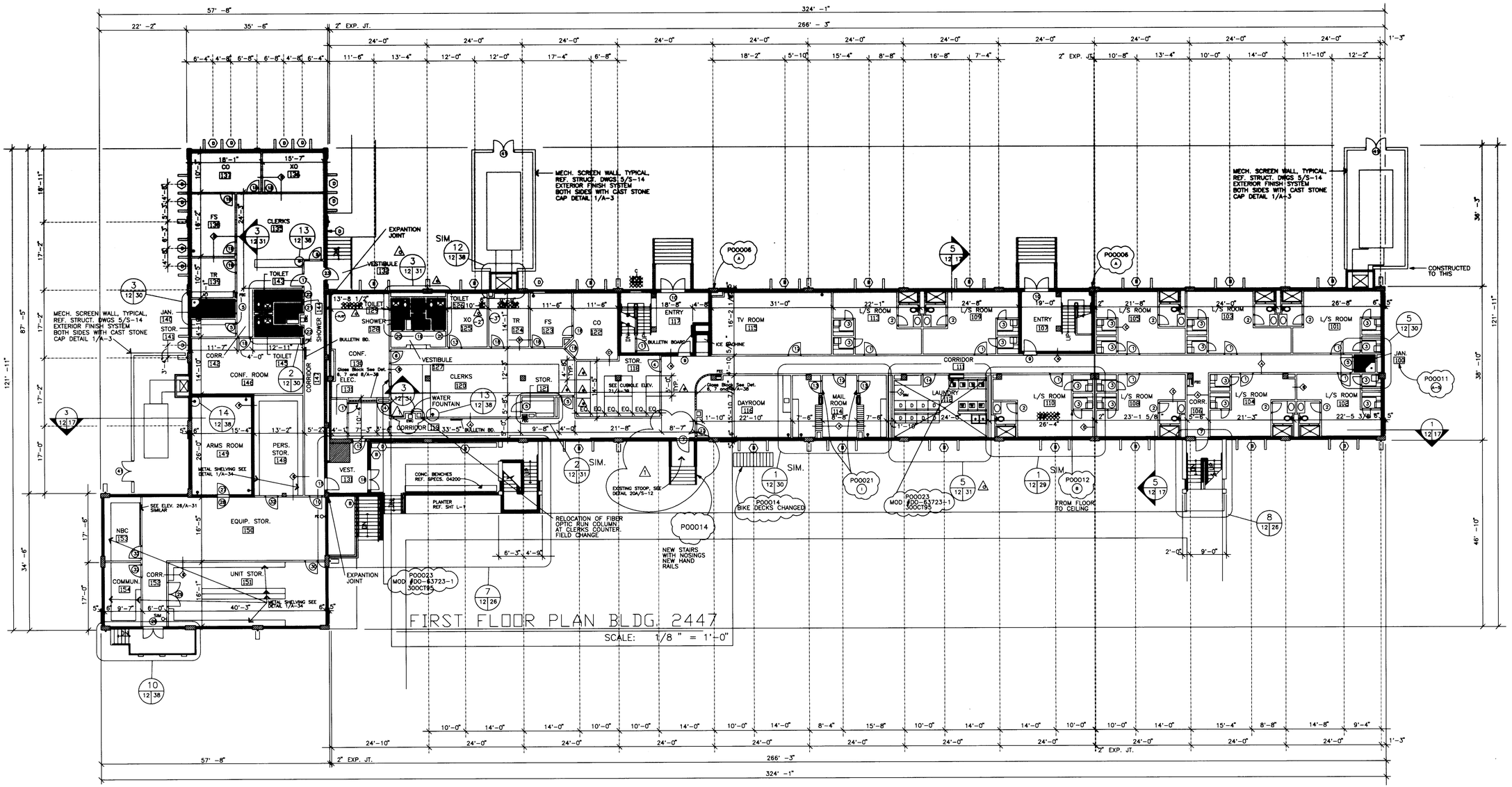

FIRST FLOOR PLAN BLDG. 2447

SCALE: 1/8 " = 1'-0"

FIRST FLOOR PLAN BLDG. 2447

SCALE: 3/32 " = 1'-0"

GENERAL NOTES:

1. EXTERIOR FINISH & INSULATION SYSTEM (EIFS) SHALL BE APPLIED OVER ALL EXTERIOR WALL SURFACES INCLUDING AREAWAY AT BASEMENT LEVEL. WHERE EXISTING GROUND ABUTS BUILDING, EIFS SHALL CONTINUE BELOW GRADE FOR AT LEAST 12 INCHES OR AS PER MANUFACTURER'S STANDARD DETAILS, WHICHEVER IS GREATER.
2. WHERE REQUIRED, EIFS SHALL HAVE A MINIMUM OF 2 INCHES OF INSULATION. DUE TO UNEVENNESS OF EXISTING OR NEW WALL SURFACES THIS THICKNESS MAY HAVE TO BE INCREASED AT SOME LOCATIONS TO OBTAIN A TRUE LEVELED SURFACE.
3. UNLESS OTHERWISE SHOWN, DIMENSIONS ARE FROM FINISHED FACE CMU WALLS TO FACE OF METAL STUD. CMU DIMENSIONS ARE NOMINAL.
4. DIMENSIONS ARE BASED ON "AS-BUILT" DRAWINGS. CONTRACTOR SHALL BE RESPONSIBLE FOR VERIFYING THESE DIMENSIONS AND ADVISING THE CONTRACTING OFFICER OF ANY SIGNIFICANT DISCREPANCIES.

LEGEND

- EXISTING REINF. CONC. OR CMU WALL TO REMAIN
- NEW DRYWALL - SEE WALL TYPES ON SHT. A-28
- NEW CMU WALL - SEE WALL TYPES ON SHT. A-28
- NEW CONCRETE INFILL AS REQUIRED
- EXISTING COLUMN
- PORTABLE FIRE EXTINGUISHER
- RECESSED FIRE EXTINGUISHER
- (19) DOOR DESIGNATION
- (A) WALL TYPE DESIGNATION
- (B) WINDOW & LOUVER DESIGNATION
- 103 ROOM DESIGNATION

NORTH

KEY PLAN: BLDG. 2447

-8' 0 8' 16'

SCALE: 3/32 " = 1'-0"

SYM	D.O. NO.	ACTION	DATE	DESCRIPTION OF REVISION
			30APR96	REVISED AS-BUILT
	(1)	P00021	09FEB96	PROVIDE STEEL FRAMED, PAINTED, HEAVY GAGED SECURITY DIAMOND WIRE MESH OVER THE LOUVERS ON THE INTERIOR SIDE.
		P00023	05MAR96	IN ALL BUILDINGS PROVIDE AND INSTALL ADDITIONAL WATER FOUNTAINS.
	(A-3)	P00011	26JUN95	DELETE THE INSTALLATION OF EXHAUST FANS IN THE JANITORS CLOSETS.
		P00014	12JUN95	PLACEMENT OF NEW DR-7, AND FRAME WITH NEW STAIR NOSINGS. (SEE A-14) (S-12).
	(B)	P00012	15SEP95	PROVIDE CLEAR PLASTIC CORNER GUARDS (IN LIVING UNITS OUTSIDE ONLY).
	(A)	P00006	01JAN95	LEAVE EXISTING CMU IN INTERIOR STAIRWELLS.
		P00002	27MAY94	END WALLS REMAIN (NO DEMO)
2	G1546	PM	180CT94	ADDED BUILDING ENTRANCE AND EWC
5		AM#0005	14APR94	DELETED EQ'S. AND ADDED DIMENSIONS
5		AM#0001	1 MAR94	DETAIL REFERENCE NO'S. AND TOILET 126 PLAN

ENGINEERING DIVISION
DESIGN BRANCH

U.S. ARMY ENGINEER DISTRICT, FORT WORTH
CORPS OF ENGINEERS
FORT WORTH, TEXAS

FORT BLISS, TEXAS

ENLISTED BARRACKS W/O DINING FACILITIES II
FY 92 PN 0036097

FIRST FLOOR PLAN
BUILDING 2447

DESIGNED BY: A. FINE
DRAWN BY: J. BRISTOW
REVIEWED BY: J. BRISTOW
SUBMITTED BY: JESSE H. KIDD, A.I.A. CHIEF, ARCHITECTURAL SECTION

SOL. NO. DACA63-94-B-0067 DATED: FEB 1994
CONTR. NO. DACA63-94-C-0120
DRAWING NUMBER FB-QE
SHEET NO. A-12 OF 39
SEQUENCE NO. 39

CADD FILE NAME: eb7fp147.dgn
SUPERSEDES SHEET A-12

"DRAWING OF WORK AS BUILT"

CONTR. NO. DACA63-94-C-0120

Tue Jul 2 11:45:35 1996

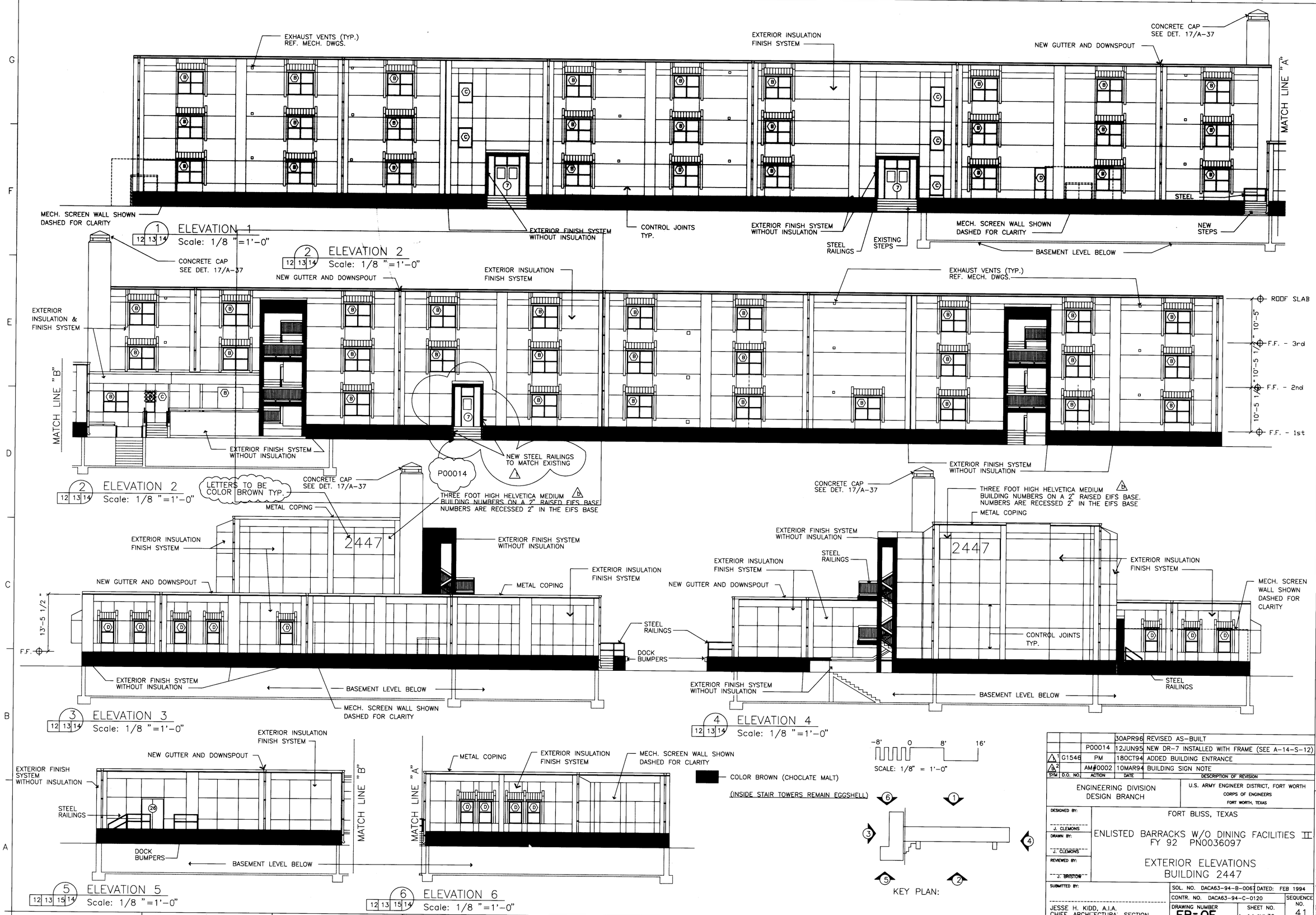

SYM	D.O. NO.	ACTION	DATE	DESCRIPTION OF REVISION
			30APR96	REVISED AS-BUILT
		P00014	12JUN95	NEW DR-7 INSTALLED WITH FRAME (SEE A-14-S-12)
1	G1546	PM	18OCT94	ADDED BUILDING ENTRANCE
2		AM#0002	10MAR94	BUILDING SIGN NOTE

ENGINEERING DIVISION
DESIGN BRANCH

U.S. ARMY ENGINEER DISTRICT, FORT WORTH
CORPS OF ENGINEERS
FORT WORTH, TEXAS

DESIGNED BY: J. CLEMONS
DRAWN BY: J. CLEMONS
REVIEWED BY: J. BRISTOW
SUBMITTED BY: JESSE H. KIDD, A.I.A. CHIEF, ARCHITECTURAL SECTION

FORT BLISS, TEXAS

ENLISTED BARRACKS W/O DINING FACILITIES II
FY 92 PN0036097

EXTERIOR ELEVATIONS
BUILDING 2447

SOL. NO. DACA63-94-B-0067 DATED: FEB 1994
CONTR. NO. DACA63-94-C-0120
SEQUENCE NO. 41
DRAWING NUMBER FB-QE
SHEET NO. A-14.10 OF 39

CADD FILE NAME: eb7ev47.dgn
SUPERSEDES SHEET A-14

"DRAWING OF WORK AS BUILT"

CONTR. NO. DACA63-94-C-0120

Tue Jul 2 11:50:48 1996

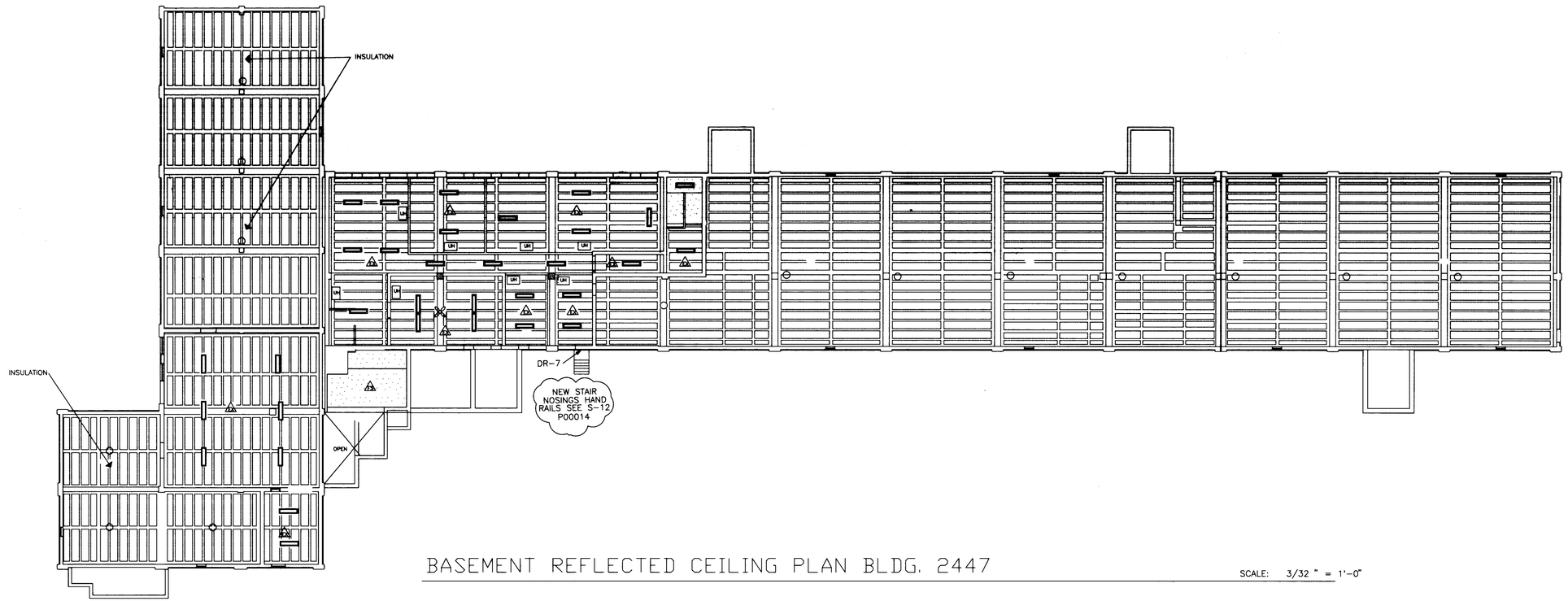

BASEMENT REFLECTED CEILING PLAN BLDG. 2447

SCALE: 3/32 " = 1'-0"

LEGEND

- 30" X 48" ACCESS PANEL WITH 12" X 24" GRILLE
- INCANDESCENT LIGHT FIXTURE. REF. ELEC.
- 2' X 4' FLUORESCENT LIGHT FIXTURE, REFER TO ELECTRICAL
- 1' X 4' FLUORESCENT LIGHT FIXTURE, REFER TO ELECTRICAL
- 2 X 4 SUSPENDED ACOUSTICAL PANEL CEILING SYSTEM W/ 2 X 2 APPEARANCE.
- SUPPLY DIFFUSER, REFER TO MECHANICAL
- RETURN AIR OR EXHAUST GRILLE, REFER TO MECHANICAL
- C.J. CONTROL JOINT
- E.J. EXPANSION JOINT
- SUSPENDED GYPSUM BOARD CEILINGS, TAPED, TEXTURED, AND PAINTED. TYPICAL IN ALL AREAS. REFER TO RM. FIN. SCHED. FOR CEILING HEIGHTS.
- EXPOSED STRUCTURE
- EXTERIOR FINISH SYSTEM W/O INSULATION
- PARTITION TO UNDERSIDE OF ROOF/FLOOR WITH 2 1/2 " MIN. SOUND ATTENUATION BATTS
- STRUCT. RIGID FRAME , SHOWN DASHED WHERE EXPOSED. REFER STRUCTURAL.
- CEILING FAN - REF. MECHANICAL
- UH UNIT HEATER - REF. MECHANICAL

NORTH

KEY PLAN: BLDG. 2447

-8' 0 8' 16'

SCALE: 3/32 " = 1'-0"

SYM	D.O. NO.	ACTION	DATE	DESCRIPTION OF REVISION
			30APR96	REVISED AS-BUILT
		P00014	12JUN95	INSTALL NEW ENTERANCE AND DOOR FRAME.

ENGINEERING DIVISION
DESIGN BRANCH

U.S. ARMY ENGINEER DISTRICT, FORT WORTH
CORPS OF ENGINEERS
FORT WORTH, TEXAS

DESIGNED BY: A. FINE
DRAWN BY: SANTIKOS/GODWIN
REVIEWED BY: J. BRISTOW
SUBMITTED BY: JESSE H. KIDD, A.I.A. CHIEF, ARCHITECTURAL SECTION

FORT BLISS, TEXAS

ENLISTED BARRACKS W/O DINING FACILITIES II
FY 92 PN 0036097

BASEMENT REFLECTED CEILING PLAN - BUILDING 2447

SOL. NO. DACA63-94-B-0067 DATED: FEB 1994
CONTR. NO. DACA63-94-C-0120
SEQUENCE NO. 42
DRAWING NUMBER FB-QE
SHEET NO. A-15 OF 39
CADD FILE NAME: eb7rc047.dgn

CONTR. NO. DACA63-94-C-0120

"DRAWING OF WORK AS BUILT"

Tue Jul 2 13:03:30 1996

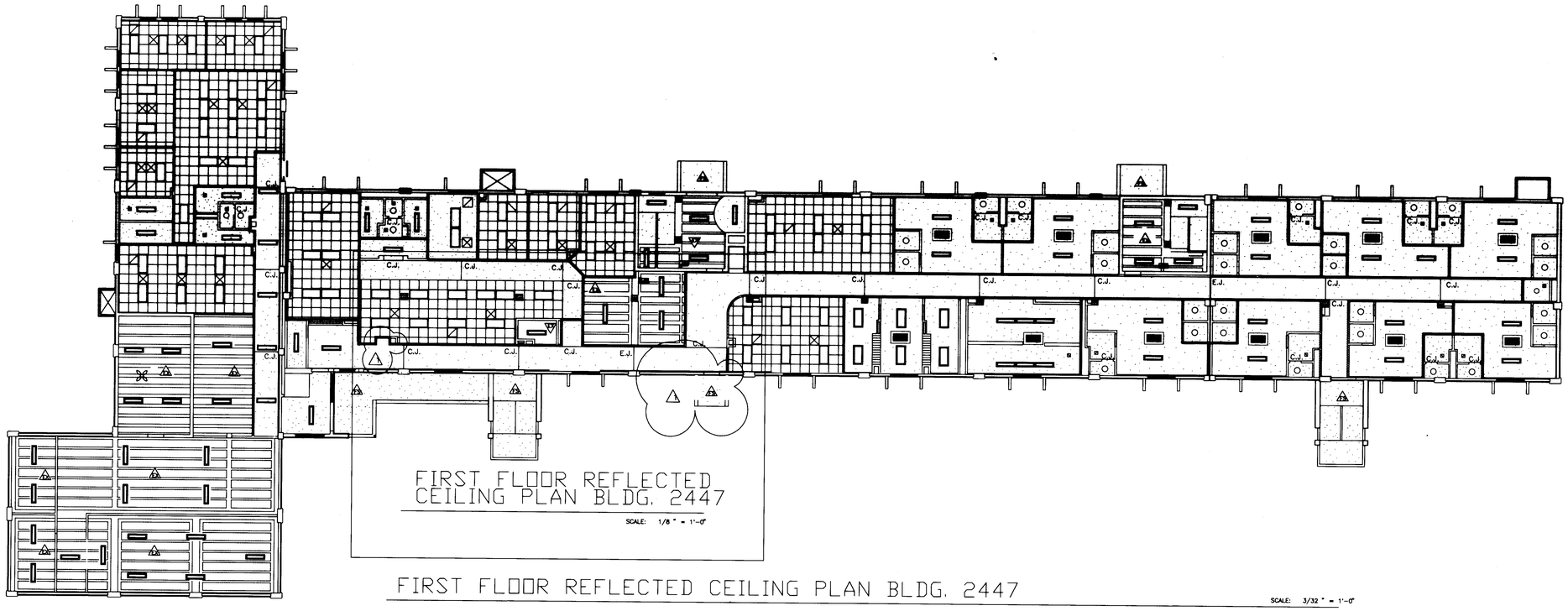

FIRST FLOOR REFLECTED CEILING PLAN BLDG. 2447

SCALE: 3/32 " = 1'-0"

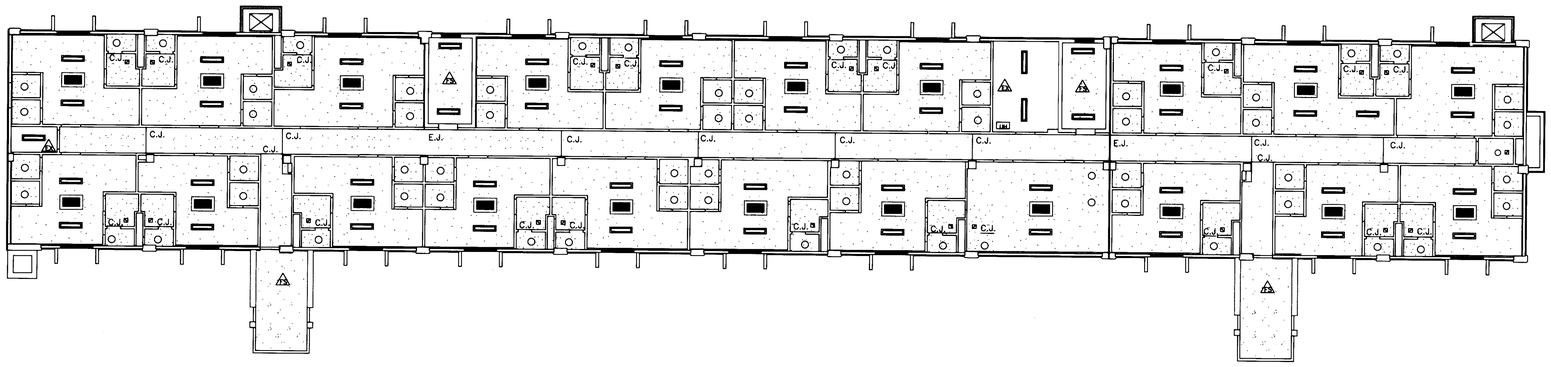

SECOND & THIRD FLOOR REFLECTED CEILING PLANS BLDG. 2447

SCALE: 3/32 " = 1'-0"

LEGEND

- 30" X 48" ACCESS PANEL WITH 12" X 24" GRILLE
- INCANDESCENT LIGHT FIXTURE. REF. ELEC.
- 2' X 4'. FLUORESCENT LIGHT FIXTURE, REFER TO ELECTRICAL
- 1' X 4'. FLUORESCENT LIGHT FIXTURE, REFER TO ELECTRICAL
- 2 X 4 SUSPENDED ACOUSTICAL PANEL CEILING SYSTEM W/ 2 X 2 APPEARANCE.
- SUPPLY DIFFUSER, REFER TO MECHANICAL
- RETURN AIR OR EXHAUST GRILLE, REFER TO MECHANICAL
- C.J. CONTROL JOINT
- E.J. EXPANSION JOINT
- SUSPENDED GYPSUM BOARD CEILINGS. TAPED, TEXTURED, AND PAINTED. TYPICAL IN ALL AREAS. REFER TO RM. FIN. SCHED. FOR CEILING HEIGHTS.
- EXPOSED STRUCTURE
- EXTERIOR FINISH SYSTEM W/O INSULATION
- PARTITION TO UNDERSIDE OF ROOF/FLOOR WITH 2 1/2 " MIN. SOUND ATTENUATION BATTS
- STRUCT. RIGID FRAME , SHOWN DASHED WHERE EXPOSED. REFER STRUCTURAL.
- CEILING FAN - REF. MECHANICAL
- UNIT HEATER - REF. MECHANICAL

NORTH

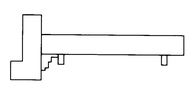

KEY PLAN: BLDG. 2447

-8' 0 8' 16'

SCALE: 3/32 " = 1'-0"

SYM	D.O. NO.	ACTION	DATE	DESCRIPTION OF REVISION
			30APR96	REVISED AS-BUILT
2	G1546	PM	18OCT94	ADDED BUILDING ENTRANCE AND EWC

ENGINEERING DIVISION
DESIGN BRANCH

U.S. ARMY ENGINEER DISTRICT, FORT WORTH
CORPS OF ENGINEERS
FORT WORTH, TEXAS

DESIGNED BY: A. FINE
DRAWN BY: SANTIKOS/GODWIN
REVIEWED BY: J. BRISTOW

FORT BLISS, TEXAS

ENLISTED BARRACKS W/O DINING FACILITIES II
FY 92 PN 0036097

1st, 2nd, & 3rd FLOOR REFLECTED CEILING PLANS - BUILDING 2447

SUBMITTED BY:
JESSE H. KIDD, A.I.A.
CHIEF, ARCHITECTURAL SECTION

SOL. NO. DACA63-94-B-0067 DATED: FEB 1994
CONTR. NO. DACA63-94-C-0120
DRAWING NUMBER FB-QE
SHEET NO. A-16, of 39
SEQUENCE NO. 43

CADD FILE NAME: eb7rc147.dgn
SUPERSEDES SHEET A-16

"DRAWING OF WORK AS BUILT"

CONTR. NO. DACA63-94-C-0120

Tue Jul 2 13:46:19 1996

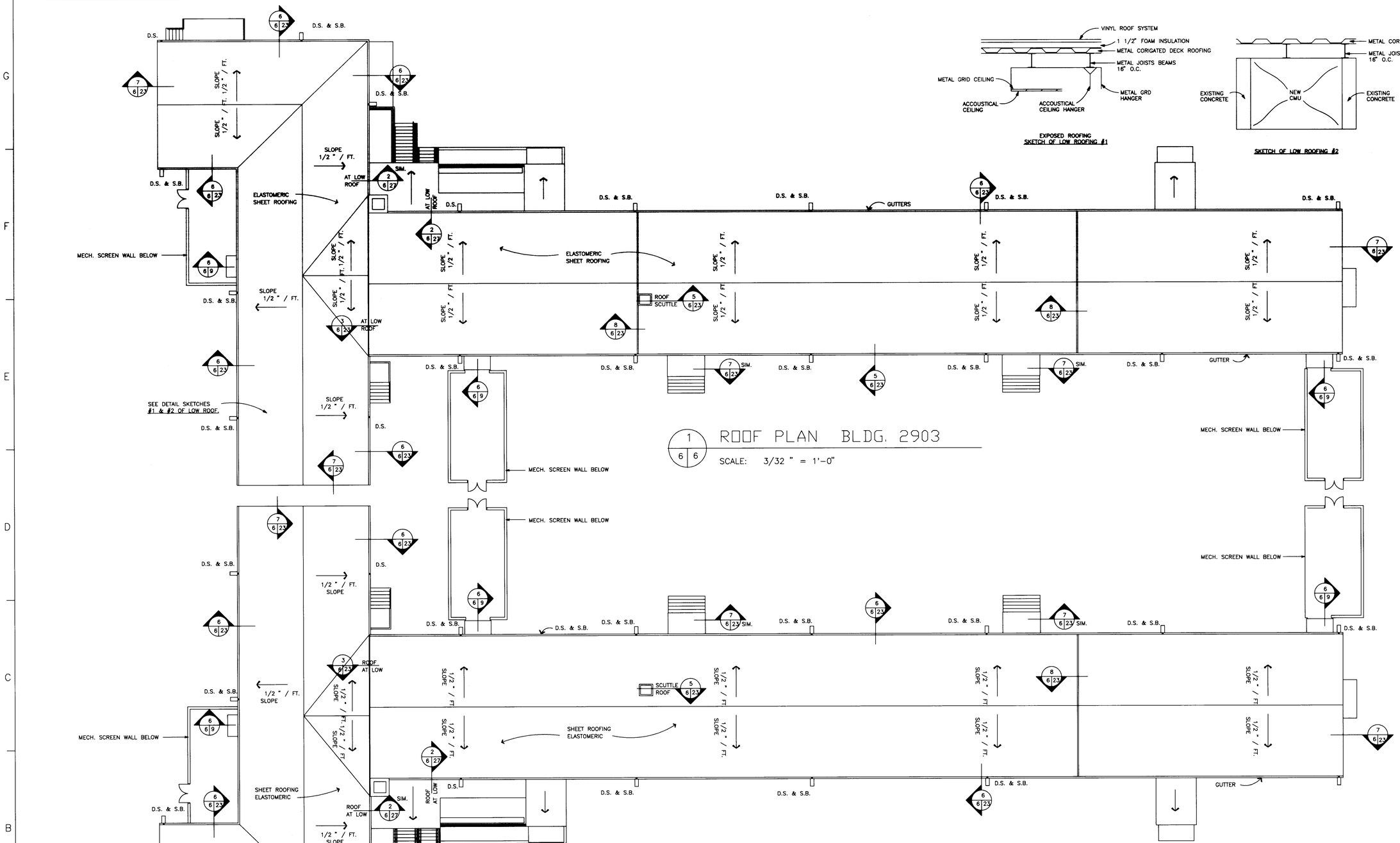

1 6 6 ROOF PLAN BLDG. 2903

SCALE: 3/32 " = 1'-0"

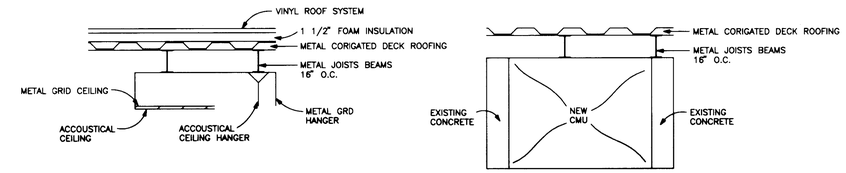

EXPOSED ROOFING
SKETCH OF LOW ROOFING #1

SKETCH OF LOW ROOFING #2

2 6 6 ROOF PLAN BLDG. 2447

SCALE: 3/32 " = 1'-0"

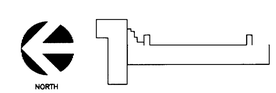

KEY PLAN: BLDG. 2903

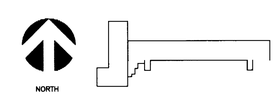

KEY PLAN: BLDG. 2447

LEGEND

D.S. DOWNSPOUT
S.B. SPLASH BLOCK
(SEE DTL.8 SHT. A-80)

-8' 0 8' 16'
SCALE: 3/32 " = 1'-0"

SYM	D.O. NO.	ACTION	DATE	DESCRIPTION OF REVISION
			30APR96	REVISED AS-BUILT

ENGINEERING DIVISION
DESIGN BRANCH

U.S. ARMY ENGINEER DISTRICT, FORT WORTH
CORPS OF ENGINEERS
FORT WORTH, TEXAS

DESIGNED BY: J. CLEMONS
DRAWN BY: J. CLEMONS
REVIEWED BY: J. BRISTOW
SUBMITTED BY: JESSE H. KIDD, A.I.A. CHIEF, ARCHITECTURAL SECTION

FORT BLISS, TEXAS

ENLISTED BARRACKS W/O DINING FACILITIES II
FY 92 PN 0036097

ROOF PLANS
BUILDINGS 2903 & 2447

SOL. NO. DACA63-94-B-0067 DATED: FEB 1994
CONTR. NO. DACA63-94-C-0120
DRAWING NUMBER FB-QE
SHEET NO. A-6 OF 39
SEQUENCE NO. 33

CADD FILE NAME: eb7rp03.dgn

"DRAWING OF WORK AS BUILT"

CONTR. NO. DACA63-94-C-0120

Tue Jul 2 10:17:14 1996

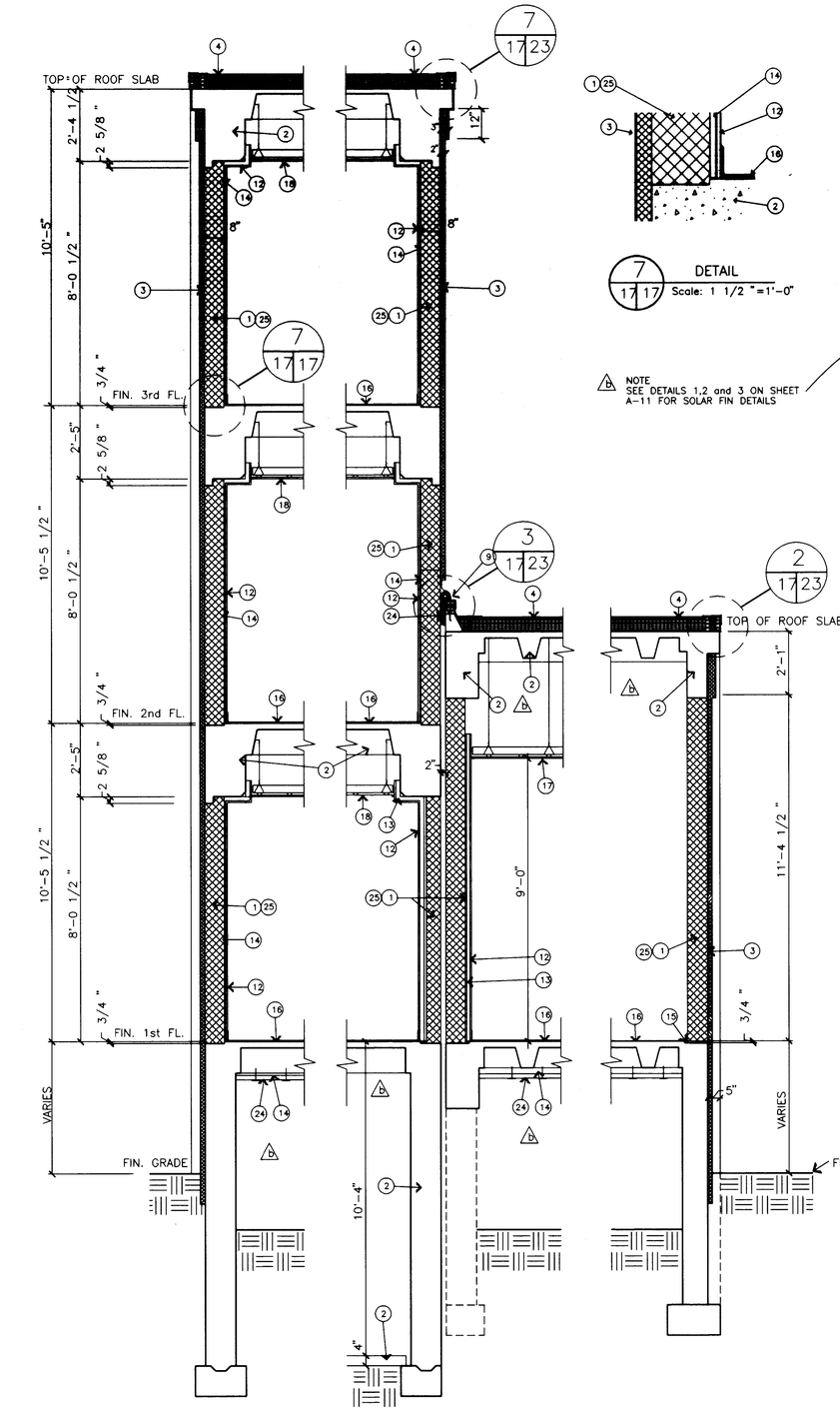

DETAIL
Scale: 1 1/2 "=1'-0"

NOTE
SEE DETAILS 1,2 and 3 ON SHEET A-11 FOR SOLAR FIN DETAILS

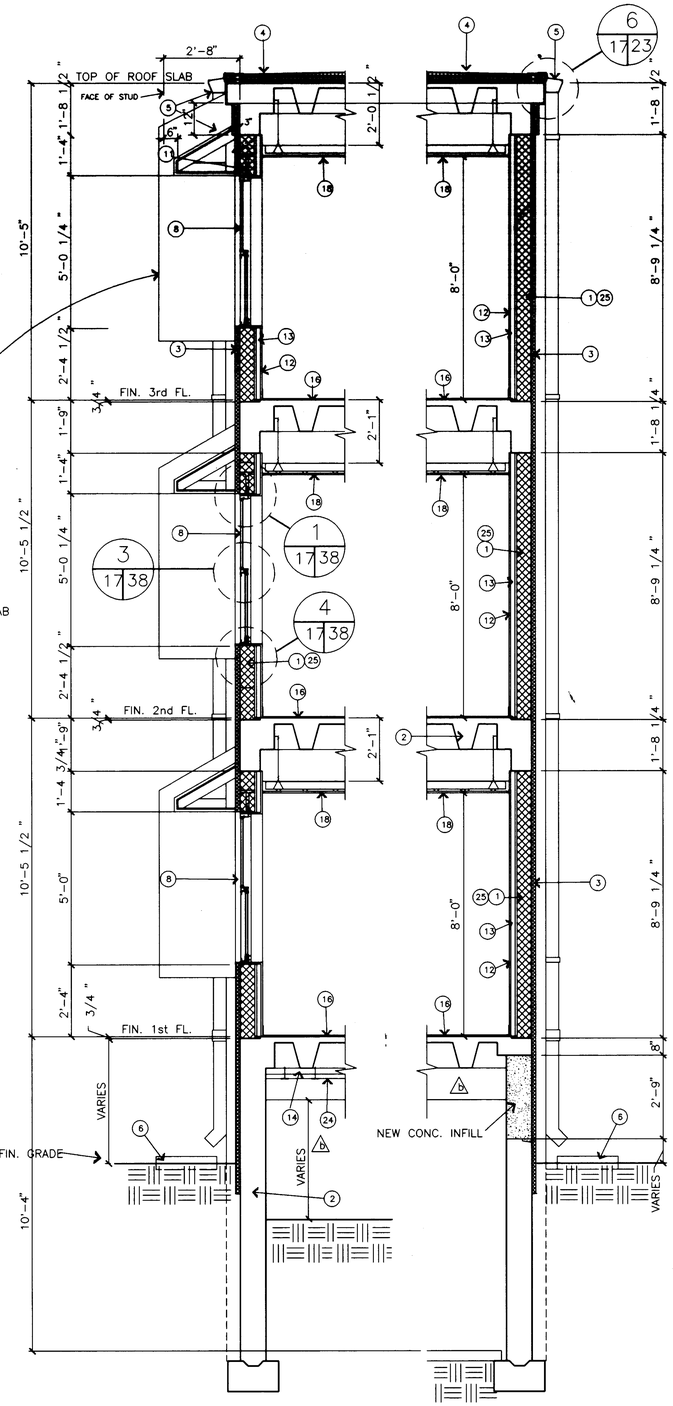

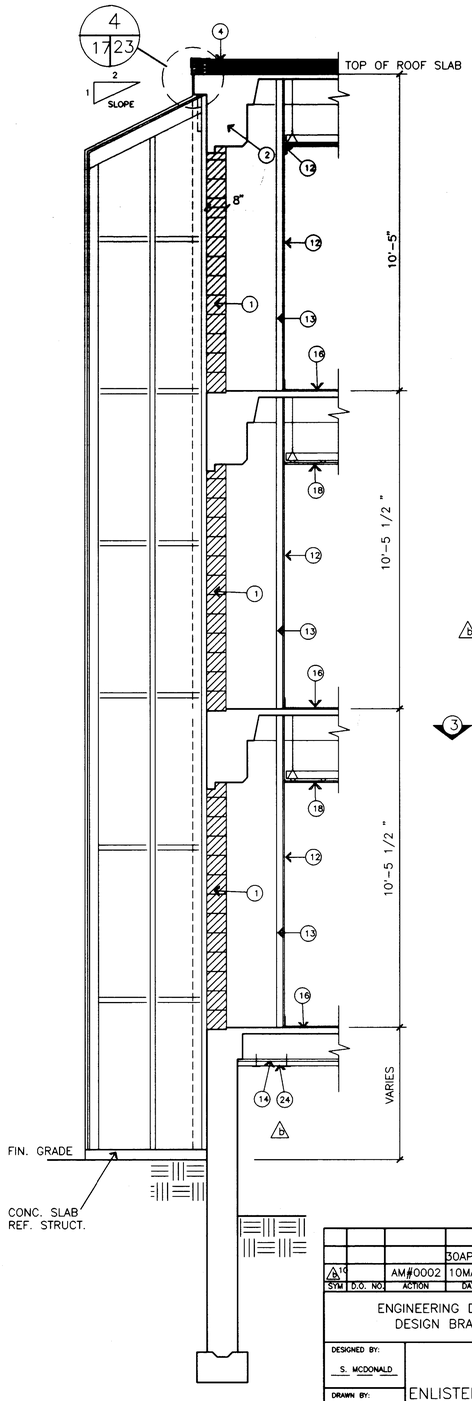

KEY NOTES

1. NEW OR EXISTING CMU (REFER TO STRUCT. DWGS. FOR CONNECTIONS & REINFORCEMENT)
2. EXISTING REINFORCED CONCRETE STRUCTURE
3. EXTERIOR INSULATION & FINISH SYSTEM
4. SINGLE PLY ROOFING SYSTEM
5. NEW GUTTER AND DOWNSPOUT
6. PRE-CAST SPLASH BLOCK
7. RIGID INSULATION (TAPERED TO SLOPE)
8. ALUMINUM WINDOW
9. EXPANSION JOINT
10. EXISTING CONC. FLOOR SLAB
11. REFER TO STRUCTURAL DRAWINGS
12. 5/8 " GYPSUM BOARD
13. 2 1/2 " METAL STUDS @ 24" O.C. MAX.
14. 7/8 " HAT CHANNELS @ 24" O.C. MAX.
15. GROUT
16. FLOOR AS SCHEDULED
17. CEILING AS SCHEDULED
18. SUSPENDED GYPSUM BOARD CEILING
19. MTL. FASCIA
20. EXT. FINISH SYSTEM (UNINSULATED)
21. EXT. GRADE 3/4 " GYP. SHEATHING
22. WOOD BLOCKING
23. 20 GA. 4" STUDS @ 16" O.C. MAX.
24. INSULATION AS SPEC.

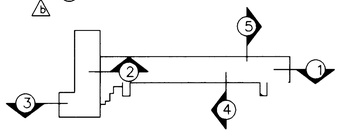

KEY PLAN: BLDG 2447

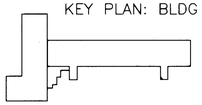

KEY PLAN: BLDG 2413

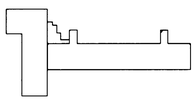

KEY PLAN: BLDG 2420

SCALE: 1/2 " = 1'-0"

1 EXTERIOR WALL SECTION
Scale: 1/2 "=1'-0"

2 EXTERIOR WALL SECTION
Scale: 1/2 "=1'-0"

3 EXTERIOR WALL SECTION
Scale: 1/2 "=1'-0"

4 EXTERIOR WALL SECTION
Scale: 1/2 "=1'-0"

5 EXTERIOR WALL SECTION
Scale: 1/2 "=1'-0"

6 EXTERIOR WALL SECTION
Scale: 1/2 "=1'-0"

SYM	D.O. NO.	ACTION	DATE	DESCRIPTION OF REVISION
			30APR96	REVISED AS-BUILT
19		AM#0002	10MAR94	CRAWL SPACE INSULATION CLARIFIED

ENGINEERING DIVISION
DESIGN BRANCH

U.S. ARMY ENGINEER DISTRICT, FORT WORTH
CORPS OF ENGINEERS
FORT WORTH, TEXAS

DESIGNED BY: S. MCDONALD
DRAWN BY: J. CLEMONS
REVIEWED BY: J. BRISTOW
SUBMITTED BY: JESSE H. KIDD, A.I.A. CHIEF, ARCHITECTURAL SECTION

FORT BLISS, TEXAS

ENLISTED BARRACKS W/O DINING FACILITIES II
FY 92 PN 0036097

WALL SECTIONS
BUILDINGS 2447,2413 and 2420

SOL. NO. DACA63-94-B-0067 DATED: FEB 1994
CONTR. NO. DACA63-94-C-0120
DRAWING NUMBER FB-QE
SHEET NO. A-17 OF 39
SEQUENCE NO. 44
CONTR. NO. DACA63-94-C-0120

CADD FILE NAME: eb7ws4.dgn

"DRAWING OF WORK AS BUILT"

Thu Jul 11 12:11:25 1996

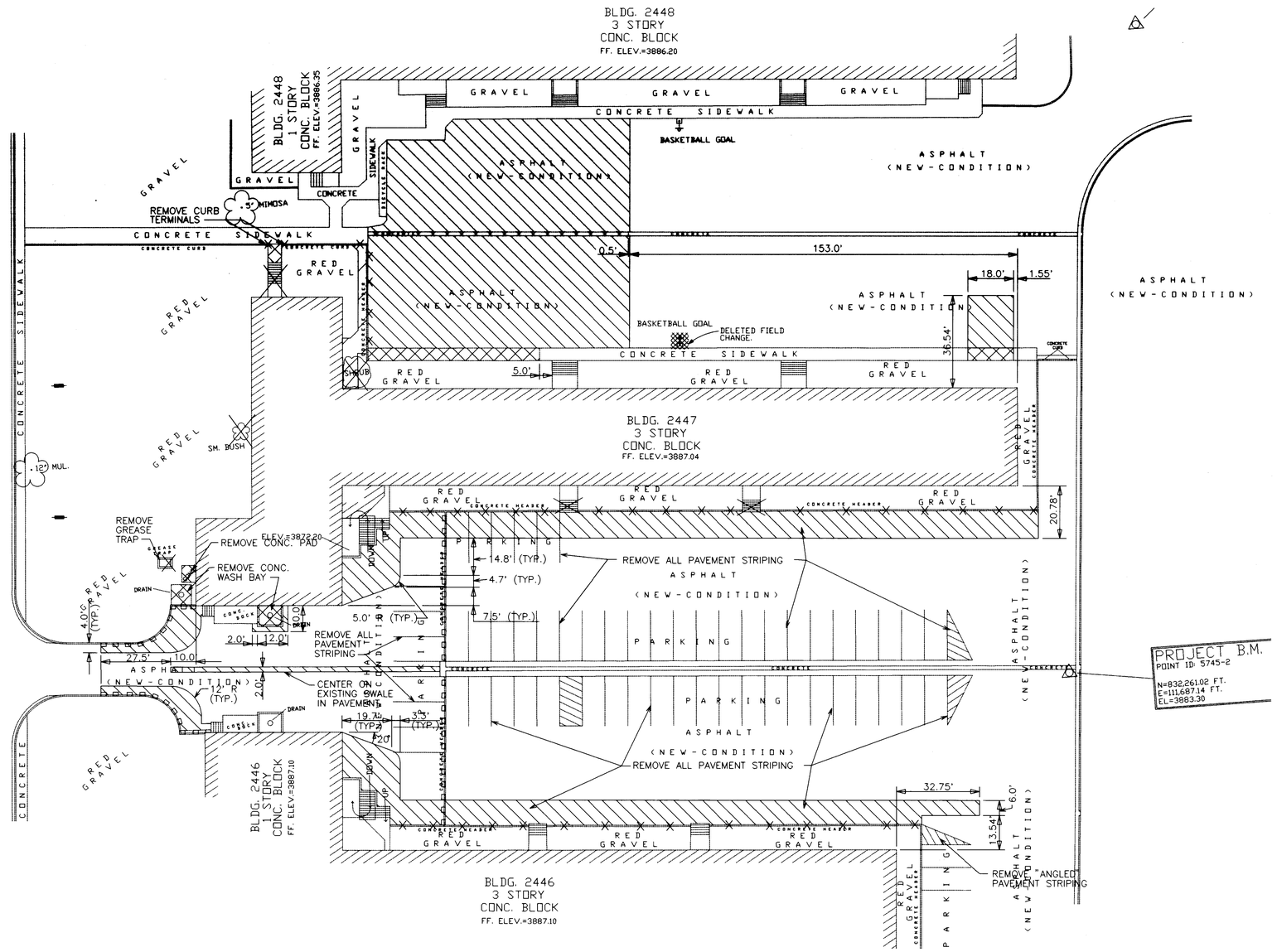

DEMOLITION LEGEND

ITEM	EXISTING	TO BE REMOVED
BUILDING		
ASPHALT	ASPHALT	~~ASPHALT~~
CONC SIDEWALK (+4" THK)	CONCRETE	~~CONCRETE~~
ROCK BLANKET	GRAVEL	~~GRAVEL~~
STOOPS		
CURB AND GUTTER		
CONC. HEADER / MOW STRIP		
TREE / BUSH	OR	
MANHOLE		

NOTES:

1. SEE UTILITY PLAN, SHT. C-16, FOR UTILITY DEMOLITION.

SYM	D.O. NO.	ACTION	DATE	DESCRIPTION OF REVISION
			30APR96	REVISED AS-BUILT
		P00002	27MAY94	END WALLS REMAIN (NO DEMO)
	A	P00006	01JAN95	LEAVE EXISTING CMU IN INTERIOR STAIRWELLS.
		AM #0005	14APR94	SHEET REVISED

ENGINEERING DIVISION
DESIGN BRANCH

U.S. ARMY ENGINEER DISTRICT, FORT WORTH
CORPS OF ENGINEERS
FORT WORTH, TEXAS

DESIGNED BY: E. MURPHY
DRAWN BY: E. MURPHY
REVIEWED BY: R. SEVERSON
SUBMITTED BY: RICHARD W. SEVERSON, P.E.
CHIEF, SITE DEVELOPMENT SECTION

FORT BLISS, TEXAS

ENLISTED BARRACKS W/O DINING FACILITIES II
FY 92 PN 0036097

DEMOLITION PLAN III
(BUILDING 2447

SOL. NO. DACA63-94-B-0067 DATED: FEB 1994
CONTR. NO. DACA63-94-C-0120
DRAWING NUMBER FB-QE
SHEET NO. C-4 OF 23
SEQUENCE NO. 4

CADD FILE NAME: EB7D3.DGN

"DRAWING OF WORK AS BUILT"

CONTR. NO. DACA63-94-C-0120

Mon Jul 1 11:20:27 1996

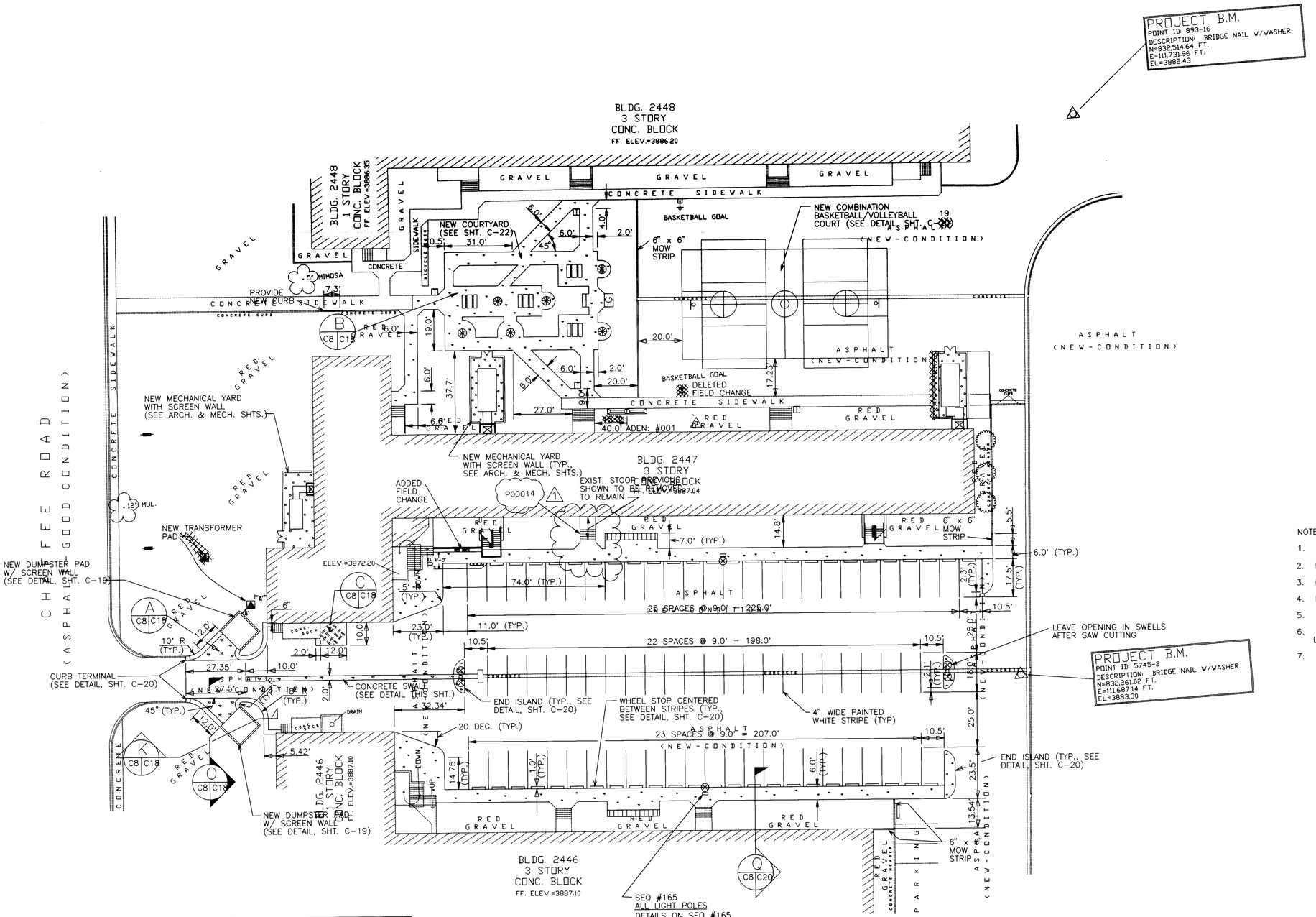

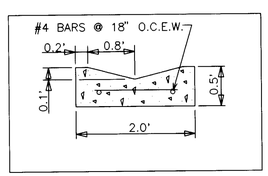

DETAIL – SECTION THRU
NEW CONCRETE SWALE

N.T.S.

LEGEND

ITEM	EXISTING	NEW
BUILDING		
ASPHALT PAVEMENT	ASPH	
CONCRETE SIDEWALK	CONCRETE	
CONCRETE PAVEMENT	CONCRETE	
ROCK BLANKET	GRAVEL	
RED LANDSCAPE ROCK (SEE NOTE 6)		
CURB AND GUTTER		
CONC. HEADER / MOW STRIP		
MANHOLE (SS OR SD)		
FIRE HYDRANT		
TREE	OR	
TRASH RECEPTACLE		
KIOSK		
BICYCLE RACK		
GRILL		
CONC. TABLE W/ BENCHES		
CONC. BENCH		
TREE GRATE		

NOTES:

1. ALL SIDEWALKS SHALL BE 6' WIDE UNLESS OTHERWISE SHOWN.
2. FOR BICYCLE RACK DETAILS, SEE SHT. C-19.
3. FOR KIOSK DETAILS, SEE SHT. C-19.
4. FOR TRASH RECEPTACLES, SEE NOTE 3 ON SHT. C-20.
5. FOR COURTYARD JOINT PATTERN AND DETAILS, SEE SHT. C-20 & C-22.
6. FOR ADDITIONAL LOCATIONS OF RED LANDSCAPE ROCK, SEE LANDSCAPE PLANS.
7. FOR 6" x 6" MOW STRIP DETAILS, SEE SHEET L-1.

20 0 20 40
SCALE IN FEET

STM	D.O. NO.	ACTION	DATE	DESCRIPTION OF REVISION
			30APR96	REVISED AS-BUILT
		P00014	12JUN95	PROVIDE AN ADDITIONAL ENTERANCE FOR BUILDING 2447.
1	G1546	PM	18OCT94	ADDED NEW SIDEWALK TO EXIT. STOOP
2		AM#0005	14APR94	SHEET REVISED
3		AM#0001	01MAR94	ADD KIOSK

ENGINEERING DIVISION
DESIGN BRANCH

U.S. ARMY ENGINEER DISTRICT, FORT WORTH
CORPS OF ENGINEERS
FORT WORTH, TEXAS

DESIGNED BY: E. MURPHY
DRAWN BY: E. MURPHY
REVIEWED BY: R. SEVERSON
SUBMITTED BY: RICHARD W. SEVERSON, P.E.
CHIEF, SITE DEVELOPMENT SECTION

FORT BLISS, TEXAS

ENLISTED BARRACKS W/O DINING FACILITIES II
FY 92 PN 0036097

LAYOUT PLAN III
(BUILDING 2447)

SOL. NO. DACA63-94-B-0067 DATED: FEB 1994
CONTR. NO. DACA63-94-C-0120
DRAWING NUMBER FB-QE
SHEET NO. C-8 OF 23
SEQUENCE NO. 8
CADD FILE NAME: EB7LP3.DGN

"DRAWING OF WORK AS BUILT"

CONTR. NO. DACA63-94-C-0120

Mon Jul 1 12:06:46 1996

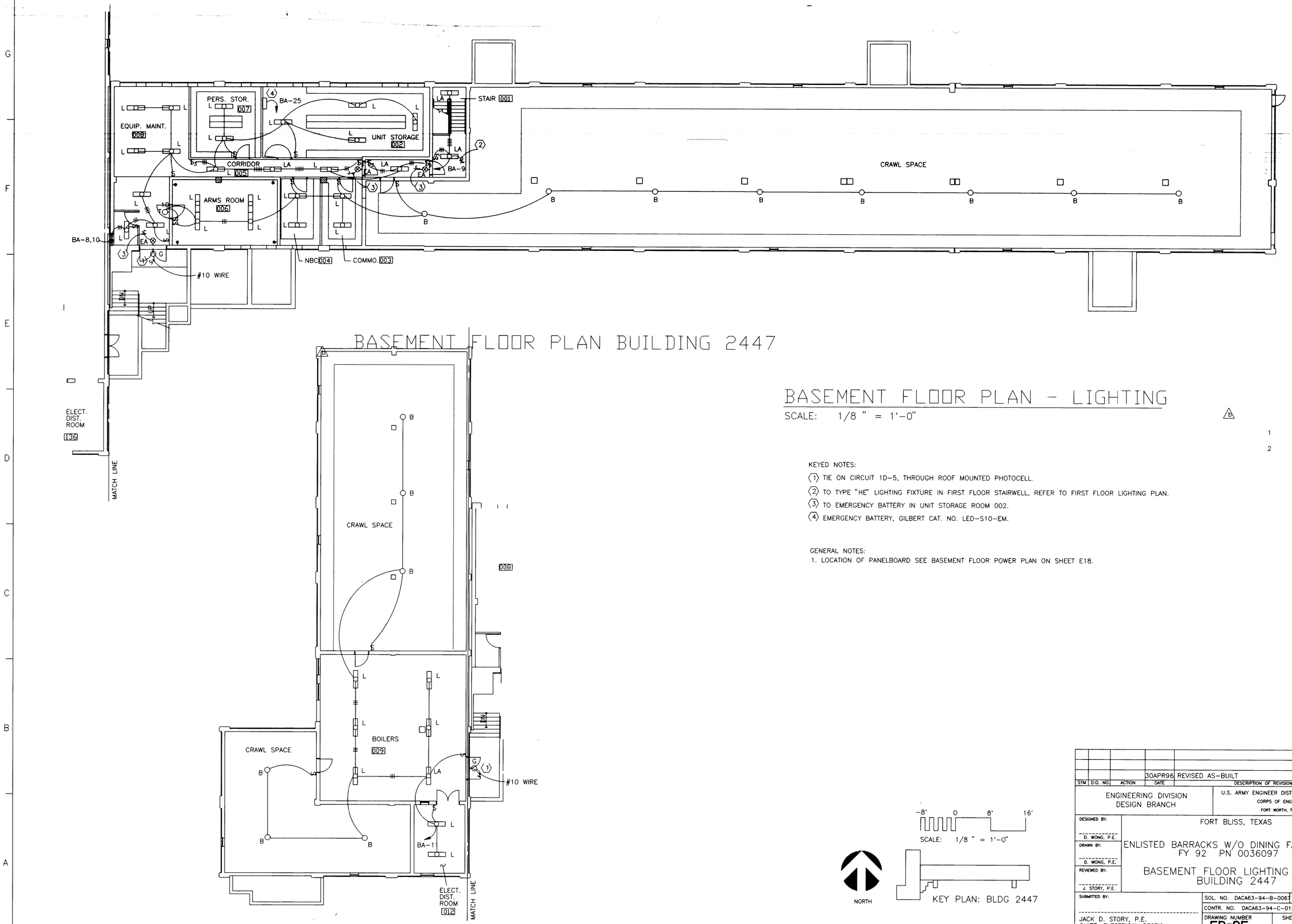

BASEMENT FLOOR PLAN BUILDING 2447

BASEMENT FLOOR PLAN - LIGHTING

SCALE: 1/8 " = 1'-0"

KEYED NOTES:

1. TIE ON CIRCUIT 1D-5, THROUGH ROOF MOUNTED PHOTOCELL.
2. TO TYPE "HE" LIGHTING FIXTURE IN FIRST FLOOR STAIRWELL, REFER TO FIRST FLOOR LIGHTING PLAN.
3. TO EMERGENCY BATTERY IN UNIT STORAGE ROOM 002.
4. EMERGENCY BATTERY, GILBERT CAT. NO. LED-S10-EM.

GENERAL NOTES:

1. LOCATION OF PANELBOARD SEE BASEMENT FLOOR POWER PLAN ON SHEET E18.

-8' 0 8' 16'

SCALE: 1/8 " = 1'-0"

NORTH

KEY PLAN: BLDG 2447

SYM	D.O. NO.	ACTION	DATE	DESCRIPTION OF REVISION
			30APR96	REVISED AS-BUILT

ENGINEERING DIVISION
DESIGN BRANCH

U.S. ARMY ENGINEER DISTRICT, FORT WORTH
CORPS OF ENGINEERS
FORT WORTH, TEXAS

DESIGNED BY: D. WONG, P.E.
DRAWN BY: D. WONG, P.E.
REVIEWED BY: J. STORY, P.E.
SUBMITTED BY: JACK D. STORY, P.E.
CHIEF, ELECTRICAL SECTION

FORT BLISS, TEXAS

ENLISTED BARRACKS W/O DINING FACILITIES II
FY 92 PN 0036097

BASEMENT FLOOR LIGHTING PLAN,
BUILDING 2447

SOL. NO. DACA63-94-B-0067 DATED: FEB 1994
CONTR. NO. DACA63-94-C-0120
DRAWING NUMBER FB-QE
SHEET NO. E17 OF 43
SEQUENCE NO. 185
CADD FILE NAME: EEB7L7C.DGN

CONTR. NO. DACA63-94-C-0120

"DRAWING OF WORK AS BUILT"

WED JUL 10 10:48:59 1996

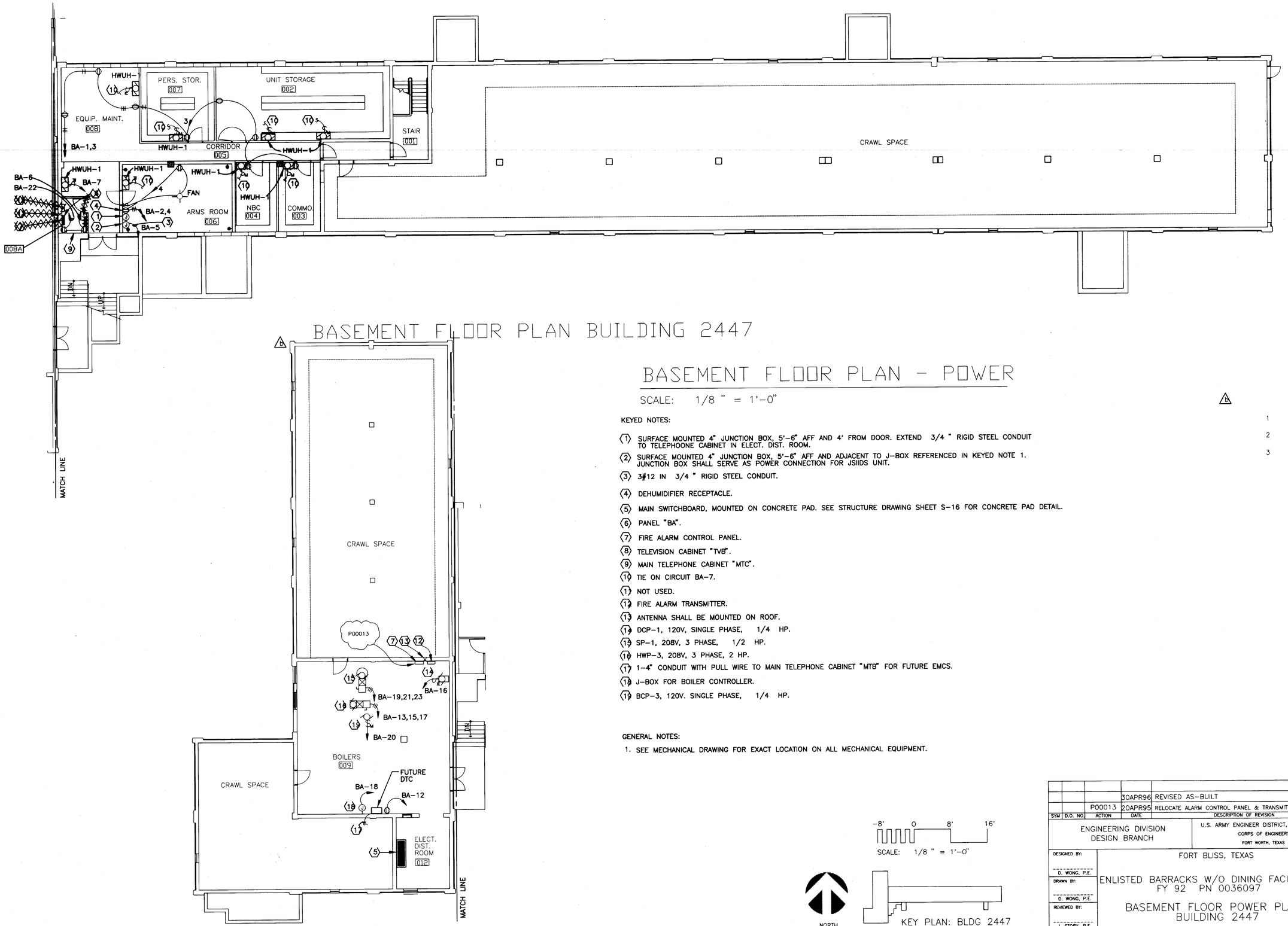

BASEMENT FLOOR PLAN BUILDING 2447

BASEMENT FLOOR PLAN - POWER

SCALE: 1/8 " = 1'-0"

KEYED NOTES:

1. SURFACE MOUNTED 4" JUNCTION BOX, 5'-6" AFF AND 4' FROM DOOR. EXTEND 3/4 " RIGID STEEL CONDUIT TO TELEPHOONE CABINET IN ELECT. DIST. ROOM.
2. SURFACE MOUNTED 4" JUNCTION BOX, 5'-6" AFF AND ADJACENT TO J-BOX REFERENCED IN KEYED NOTE 1. JUNCTION BOX SHALL SERVE AS POWER CONNECTION FOR JSIIDS UNIT.
3. 3#12 IN 3/4 " RIGID STEEL CONDUIT.
4. DEHUMIDIFIER RECEPTACLE.
5. MAIN SWITCHBOARD, MOUNTED ON CONCRETE PAD. SEE STRUCTURE DRAWING SHEET S-16 FOR CONCRETE PAD DETAIL.
6. PANEL "BA".
7. FIRE ALARM CONTROL PANEL.
8. TELEVISION CABINET "TVB".
9. MAIN TELEPHONE CABINET "MTC".
10. TIE ON CIRCUIT BA-7.
11. NOT USED.
12. FIRE ALARM TRANSMITTER.
13. ANTENNA SHALL BE MOUNTED ON ROOF.
14. DCP-1, 120V, SINGLE PHASE, 1/4 HP.
15. SP-1, 208V, 3 PHASE, 1/2 HP.
16. HWP-3, 208V, 3 PHASE, 2 HP.
17. 1-4" CONDUIT WITH PULL WIRE TO MAIN TELEPHONE CABINET "MTB" FOR FUTURE EMCS.
18. J-BOX FOR BOILER CONTROLLER.
19. BCP-3, 120V. SINGLE PHASE, 1/4 HP.

GENERAL NOTES:

1. SEE MECHANICAL DRAWING FOR EXACT LOCATION ON ALL MECHANICAL EQUIPMENT.

-8' 0 8' 16'

SCALE: 1/8 " = 1'-0"

NORTH

KEY PLAN: BLDG 2447

SYM	D.O. NO.	ACTION	DATE	DESCRIPTION OF REVISION
			30APR96	REVISED AS-BUILT
		P00013	20APR95	RELOCATE ALARM CONTROL PANEL & TRANSMITTER ALL BLDGS.

ENGINEERING DIVISION
DESIGN BRANCH

U.S. ARMY ENGINEER DISTRICT, FORT WORTH
CORPS OF ENGINEERS
FORT WORTH, TEXAS

DESIGNED BY: D. WONG, P.E.
DRAWN BY: D. WONG, P.E.
REVIEWED BY: J. STORY, P.E.
SUBMITTED BY: JACK D. STORY, P.E. CHIEF, ELECTRICAL SECTION

FORT BLISS, TEXAS

ENLISTED BARRACKS W/O DINING FACILITIES II
FY 92 PN 0036097

BASEMENT FLOOR POWER PLAN, BUILDING 2447

SOL. NO. DACA63-94-B-0067 DATED: FEB 1994
CONTR. NO. DACA63-94-C-0120
DRAWING NUMBER FB-QE
SHEET NO. E18 OF 43
SEQUENCE NO. 186

CADD FILE NAME: EEB7P7C.DGN

"DRAWING OF WORK AS BUILT"

CONTR. NO. DACA63-94-C-0120

Fri Nov 15 11:01:22 1996

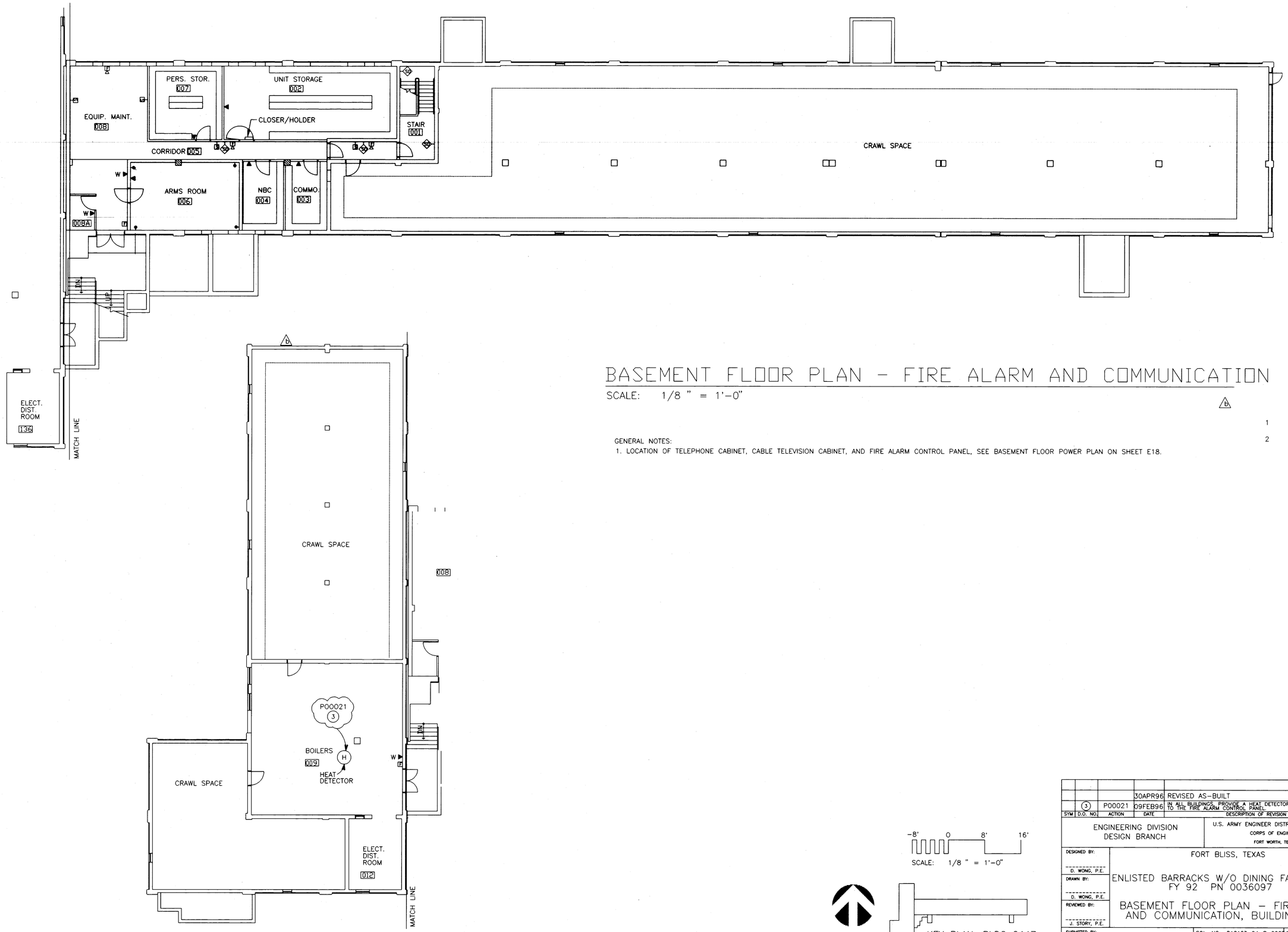

BASEMENT FLOOR PLAN - FIRE ALARM AND COMMUNICATION

SCALE: 1/8 " = 1'-0"

GENERAL NOTES:

1. LOCATION OF TELEPHONE CABINET, CABLE TELEVISION CABINET, AND FIRE ALARM CONTROL PANEL, SEE BASEMENT FLOOR POWER PLAN ON SHEET E18.

-8' 0 8' 16'

SCALE: 1/8 " = 1'-0"

NORTH

KEY PLAN: BLDG 2447

SYM	D.O. NO.	ACTION	DATE	DESCRIPTION OF REVISION
			30APR96	REVISED AS-BUILT
3	P00021		09FEB96	IN ALL BUILDINGS, PROVIDE A HEAT DETECTOR ADJACENT TO THE FIRE ALARM CONTROL PANEL.

ENGINEERING DIVISION
DESIGN BRANCH

U.S. ARMY ENGINEER DISTRICT, FORT WORTH
CORPS OF ENGINEERS
FORT WORTH, TEXAS

DESIGNED BY: D. WONG, P.E.
DRAWN BY: D. WONG, P.E.
REVIEWED BY: J. STORY, P.E.
SUBMITTED BY: JACK D. STORY, P.E.
CHIEF, ELECTRICAL SECTION

FORT BLISS, TEXAS

ENLISTED BARRACKS W/O DINING FACILITIES II
FY 92 PN 0036097

BASEMENT FLOOR PLAN - FIRE ALARM AND COMMUNICATION, BUILDING 2447

SOL. NO. DACA63-94-B-0067 DATED: FEB 1994
CONTR. NO. DACA63-94-C-0120
SEQUENCE NO. 187
DRAWING NUMBER FB-QE
SHEET NO. E19 OF 43
CADD FILE NAME: EEB7C7C.DGN

CONTR. NO. DACA63-94-C-0120

"DRAWING OF WORK AS BUILT"

Wed Jul 10 10:50:50 1996

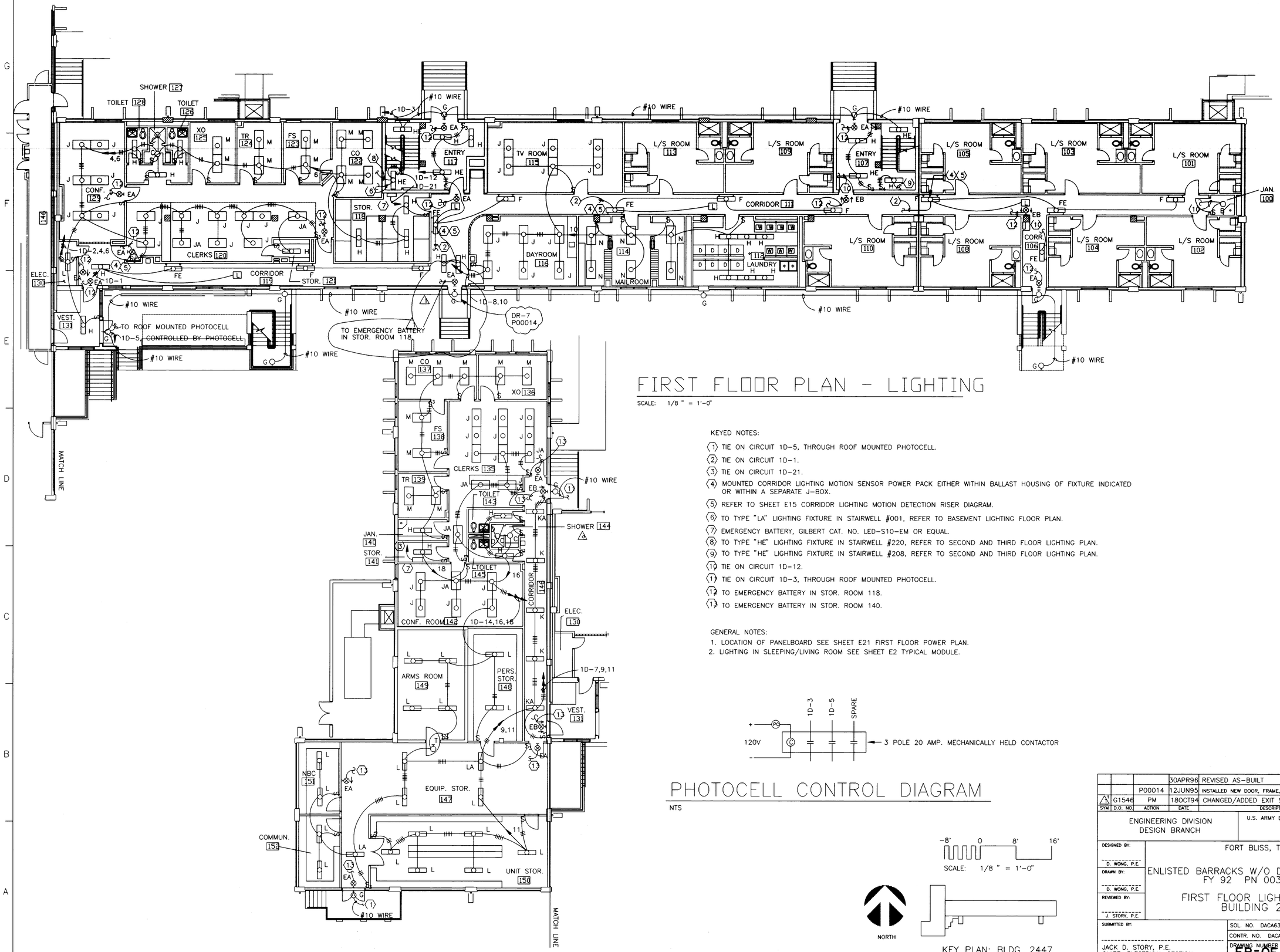

FIRST FLOOR PLAN - LIGHTING

SCALE: 1/8 " = 1'-0"

KEYED NOTES:

1. TIE ON CIRCUIT 1D-5, THROUGH ROOF MOUNTED PHOTOCELL.
2. TIE ON CIRCUIT 1D-1.
3. TIE ON CIRCUIT 1D-21.
4. MOUNTED CORRIDOR LIGHTING MOTION SENSOR POWER PACK EITHER WITHIN BALLAST HOUSING OF FIXTURE INDICATED OR WITHIN A SEPARATE J-BOX.
5. REFER TO SHEET E15 CORRIDOR LIGHTING MOTION DETECTION RISER DIAGRAM.
6. TO TYPE "LA" LIGHTING FIXTURE IN STAIRWELL #001, REFER TO BASEMENT LIGHTING FLOOR PLAN.
7. EMERGENCY BATTERY, GILBERT CAT. NO. LED-S10-EM OR EQUAL.
8. TO TYPE "HE" LIGHTING FIXTURE IN STAIRWELL #220, REFER TO SECOND AND THIRD FLOOR LIGHTING PLAN.
9. TO TYPE "HE" LIGHTING FIXTURE IN STAIRWELL #208, REFER TO SECOND AND THIRD FLOOR LIGHTING PLAN.
10. TIE ON CIRCUIT 1D-12.
11. TIE ON CIRCUIT 1D-3, THROUGH ROOF MOUNTED PHOTOCELL.
12. TO EMERGENCY BATTERY IN STOR. ROOM 118.
13. TO EMERGENCY BATTERY IN STOR. ROOM 140.

GENERAL NOTES:

1. LOCATION OF PANELBOARD SEE SHEET E21 FIRST FLOOR POWER PLAN.
2. LIGHTING IN SLEEPING/LIVING ROOM SEE SHEET E2 TYPICAL MODULE.

PHOTOCELL CONTROL DIAGRAM

NTS

SCALE: 1/8 " = 1'-0"

KEY PLAN: BLDG. 2447

SYM	D.O. NO.	ACTION	DATE	DESCRIPTION OF REVISION
			30APR96	REVISED AS-BUILT
	P00014		12JUN95	INSTALLED NEW DOOR, FRAME, HANDRAILS & STAIRS AT ENTRANCE
1	G1546	PM	18OCT94	CHANGED/ADDED EXIT SIGN AND EXTERIOR LIGHT

ENGINEERING DIVISION
DESIGN BRANCH

U.S. ARMY ENGINEER DISTRICT, FORT WORTH
CORPS OF ENGINEERS
FORT WORTH, TEXAS

DESIGNED BY: D. WONG, P.E.
DRAWN BY: D. WONG, P.E.
REVIEWED BY: J. STORY, P.E.
SUBMITTED BY: JACK D. STORY, P.E.
CHIEF, ELECTRICAL SECTION

FORT BLISS, TEXAS

ENLISTED BARRACKS W/O DINING FACILITIES II
FY 92 PN 0036097

FIRST FLOOR LIGHTING PLAN
BUILDING 2447

SOL. NO. DACA63-94-B-0067 DATED: FEB 1994
CONTR. NO. DACA63-94-C-0120
DRAWING NUMBER FB-QE
SHEET NO. E20.1 OF 43
SEQUENCE NO. 188

CONTR. NO. DACA63-94-C-0120

CADD FILE NAME: EEB7L7A.546
SUPERSEDES SHEET 20

"DRAWING OF WORK AS BUILT"

Wed Jul 10 10:52:23 1996

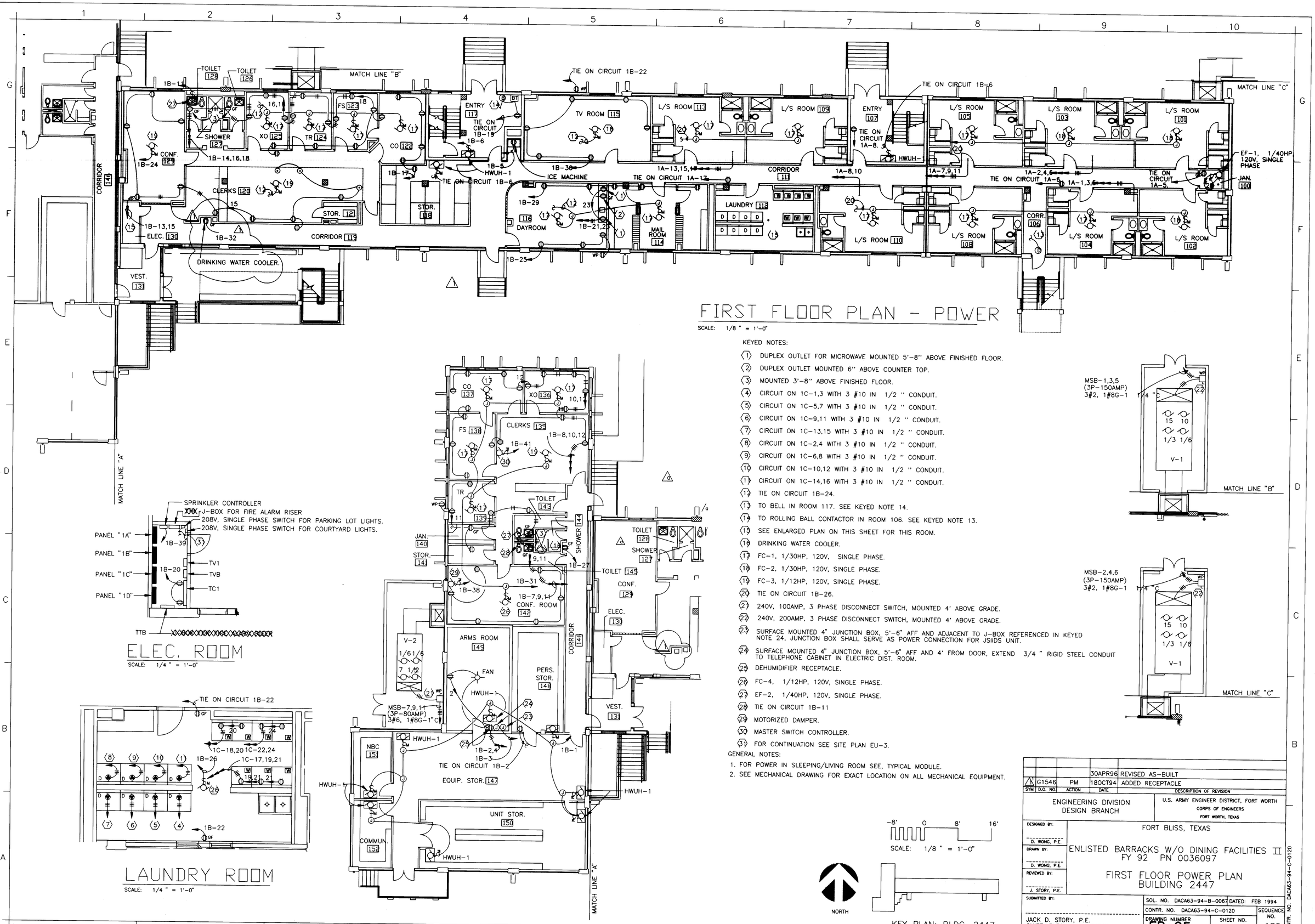

FIRST FLOOR PLAN - POWER

SCALE: 1/8 " = 1'-0"

ELEC. ROOM

SCALE: 1/4 " = 1'-0"

LAUNDRY ROOM

SCALE: 1/4 " = 1'-0"

KEYED NOTES:

1. DUPLEX OUTLET FOR MICROWAVE MOUNTED 5'-8" ABOVE FINISHED FLOOR.
2. DUPLEX OUTLET MOUNTED 6" ABOVE COUNTER TOP.
3. MOUNTED 3'-8" ABOVE FINISHED FLOOR.
4. CIRCUIT ON 1C-1,3 WITH 3 #10 IN 1/2 " CONDUIT.
5. CIRCUIT ON 1C-5,7 WITH 3 #10 IN 1/2 " CONDUIT.
6. CIRCUIT ON 1C-9,11 WITH 3 #10 IN 1/2 " CONDUIT.
7. CIRCUIT ON 1C-13,15 WITH 3 #10 IN 1/2 " CONDUIT.
8. CIRCUIT ON 1C-2,4 WITH 3 #10 IN 1/2 " CONDUIT.
9. CIRCUIT ON 1C-6,8 WITH 3 #10 IN 1/2 " CONDUIT.
10. CIRCUIT ON 1C-10,12 WITH 3 #10 IN 1/2 " CONDUIT.
11. CIRCUIT ON 1C-14,16 WITH 3 #10 IN 1/2 " CONDUIT.
12. TIE ON CIRCUIT 1B-24.
13. TO BELL IN ROOM 117. SEE KEYED NOTE 14.
14. TO ROLLING BALL CONTACTOR IN ROOM 106. SEE KEYED NOTE 13.
15. SEE ENLARGED PLAN ON THIS SHEET FOR THIS ROOM.
16. DRINKING WATER COOLER.
17. FC-1, 1/30HP, 120V, SINGLE PHASE.
18. FC-2, 1/30HP, 120V, SINGLE PHASE.
19. FC-3, 1/12HP, 120V, SINGLE PHASE.
20. TIE ON CIRCUIT 1B-26.
21. 240V, 100AMP, 3 PHASE DISCONNECT SWITCH, MOUNTED 4' ABOVE GRADE.
22. 240V, 200AMP, 3 PHASE DISCONNECT SWITCH, MOUNTED 4' ABOVE GRADE.
23. SURFACE MOUNTED 4" JUNCTION BOX, 5'-6" AFF AND ADJACENT TO J-BOX REFERENCED IN KEYED NOTE 24, JUNCTION BOX SHALL SERVE AS POWER CONNECTION FOR JSIIDS UNIT.
24. SURFACE MOUNTED 4" JUNCTION BOX, 5'-6" AFF AND 4' FROM DOOR, EXTEND 3/4 " RIGID STEEL CONDUIT TO TELEPHONE CABINET IN ELECTRIC DIST. ROOM.
25. DEHUMIDIFIER RECEPTACLE.
26. FC-4, 1/12HP, 120V, SINGLE PHASE.
27. EF-2, 1/40HP, 120V, SINGLE PHASE.
28. TIE ON CIRCUIT 1B-11
29. MOTORIZED DAMPER.
30. MASTER SWITCH CONTROLLER.
31. FOR CONTINUATION SEE SITE PLAN EU-3.

GENERAL NOTES:

1. FOR POWER IN SLEEPING/LIVING ROOM SEE, TYPICAL MODULE.
2. SEE MECHANICAL DRAWING FOR EXACT LOCATION ON ALL MECHANICAL EQUIPMENT.

SCALE: 1/8 " = 1'-0"

KEY PLAN: BLDG. 2447

SYM	D.O. NO.	ACTION	DATE	DESCRIPTION OF REVISION
			30APR96	REVISED AS-BUILT
1	G1546	PM	18OCT94	ADDED RECEPTACLE

ENGINEERING DIVISION
DESIGN BRANCH

U.S. ARMY ENGINEER DISTRICT, FORT WORTH
CORPS OF ENGINEERS
FORT WORTH, TEXAS

DESIGNED BY: D. WONG, P.E.
DRAWN BY: D. WONG, P.E.
REVIEWED BY: J. STORY, P.E.
SUBMITTED BY: JACK D. STORY, P.E. CHIEF, ELECTRICAL SECTION

FORT BLISS, TEXAS

ENLISTED BARRACKS W/O DINING FACILITIES II
FY 92 PN 0036097

FIRST FLOOR POWER PLAN
BUILDING 2447

SOL. NO. DACA63-94-B-0067 DATED: FEB 1994
CONTR. NO. DACA63-94-C-0120
SEQUENCE NO. 189
DRAWING NUMBER FB-QE
SHEET NO. E21.10f 43

CADD FILE NAME: EEB7P7A.546
SUPERSEDES SHEET E21

"DRAWING OF WORK AS BUILT"

CONTR. NO. DACA63-94-C-0120

WED JUL 10 10:53:59 1996

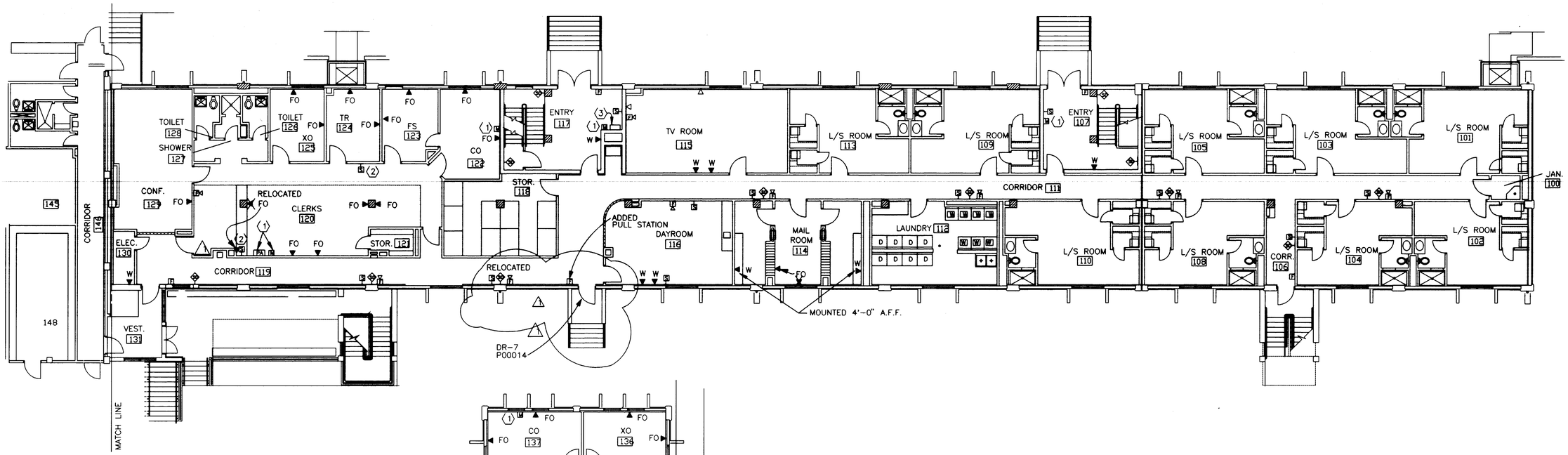

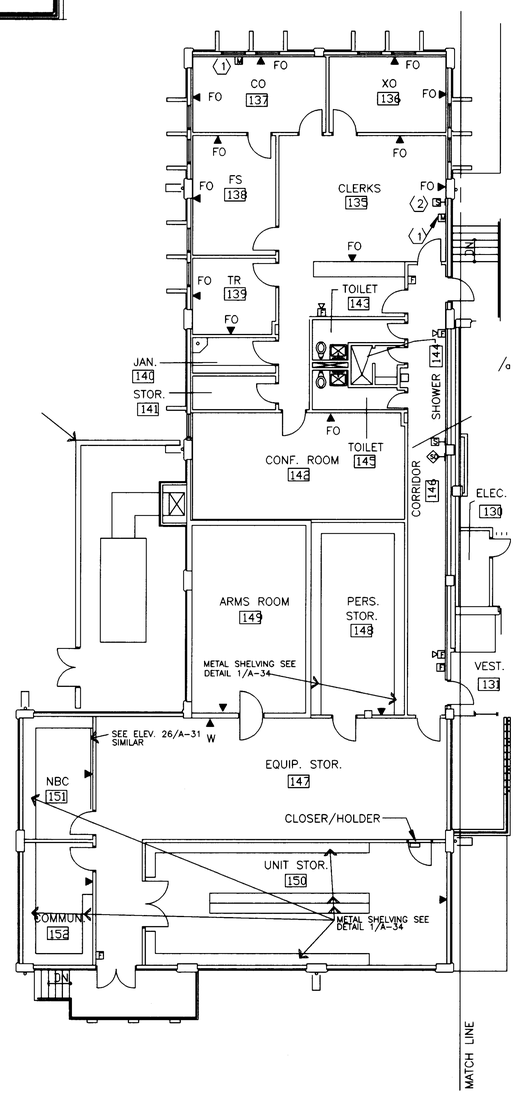

FIRST FLOOR PLAN - FIRE ALARM AND COMMUNICATION

SCALE: 1/8 " = 1'-0"

KEYED NOTES:

⟨1⟩ EXACT LOCATION OF PA AMPLIFIER AND MICROPHONES SHALL BE DETERMINED BY CONTRACTING OFFICER'S REP.

⟨2⟩ SPEAKER SHALL INCLUDE VOLUNE CONTROL IN CLERKS AREA.

⟨3⟩ FIRE ALARM REMOTE ANNUNCIATOR PANEL.

GENERAL NOTES:

1. FOR FIRE ALARM DETECTORS, TV OUTLETS, TELEPHONE OUTLETS AND SPEAKERS IN SLEEPING/ LIVING ROOM, SEE SHEET E2 TYPICAL MODULE.
2. FOR LOCATION OF TELEPHONE CABINET, TELEVISION CABINET AND J-BOX FOR FIRE ALARM RESER, SEE ELECT. ROOM ON SHEET E21 FIRST FLOOR POWER PLAN.

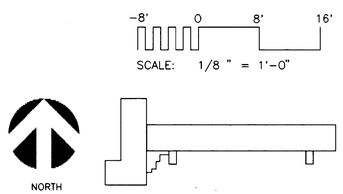

KEY PLAN: BLDG. 2447

SYM	D.O. NO.	ACTION	DATE	DESCRIPTION OF REVISION
			30APR96	REVISED AS-BUILT
		P00014	12JUN95	INSTALLED NEW DOOR, FRAME, HANDRAILS, STAIRS AT ENTRANCE
		P00007	23JAN95	PROVIDE PRESSURE SWITCH AT ALL RISER LOCATIONS
1	G1546	PM	18OCT94	RELOCATED/ADDED FIRE ALARM, SPEAKER, S.DETEC.

ENGINEERING DIVISION
DESIGN BRANCH

U.S. ARMY ENGINEER DISTRICT, FORT WORTH
CORPS OF ENGINEERS
FORT WORTH, TEXAS

DESIGNED BY: D. WONG, P.E.
DRAWN BY: D. WONG, P.E.
REVIEWED BY: J. STORY, P.E.
SUBMITTED BY: JACK D. STORY, P.E.
CHIEF, ELECTRICAL SECTION

FORT BLISS, TEXAS

ENLISTED BARRACKS W/O DINING FACILITIES II
FY 92 PN 0036097

FIRST FLOOR PLAN - FIRE ALARM AND COMMUNICATION, BUILDING 2447

SOL. NO. DACA63-94-B-0067 DATED: FEB 1994
CONTR. NO. DACA63-94-C-0120
DRAWING NUMBER FB-QE
SHEET NO. E22.1 OF 43
SEQUENCE NO. 190

CADD FILE NAME: EEB7C7A.546
SUPERSEDES SHEET 22

"DRAWING OF WORK AS BUILT"

CONTR. NO. DACA63-94-C-0120

Wed Jul 10 10:55:16 1996

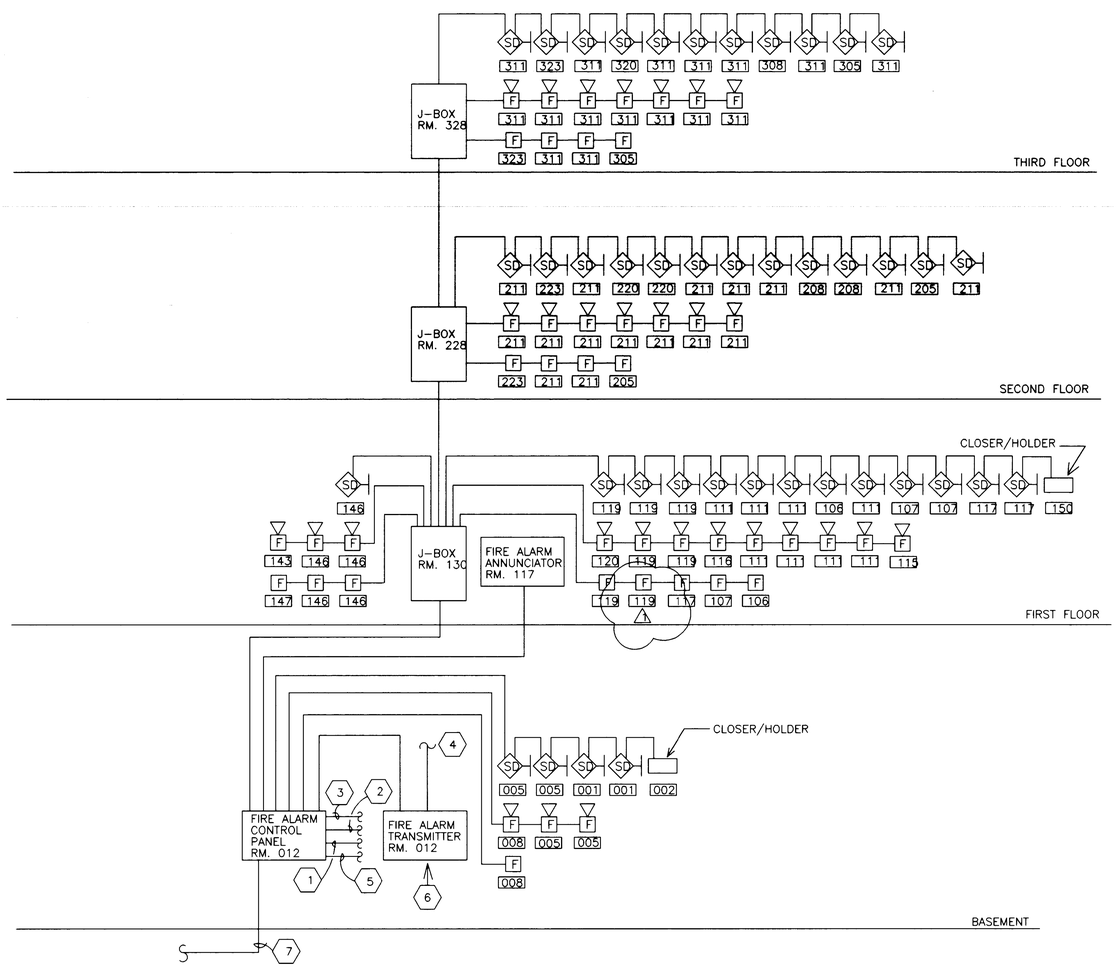

FIRE ALARM RISER DIAGRAM

N.T.S.

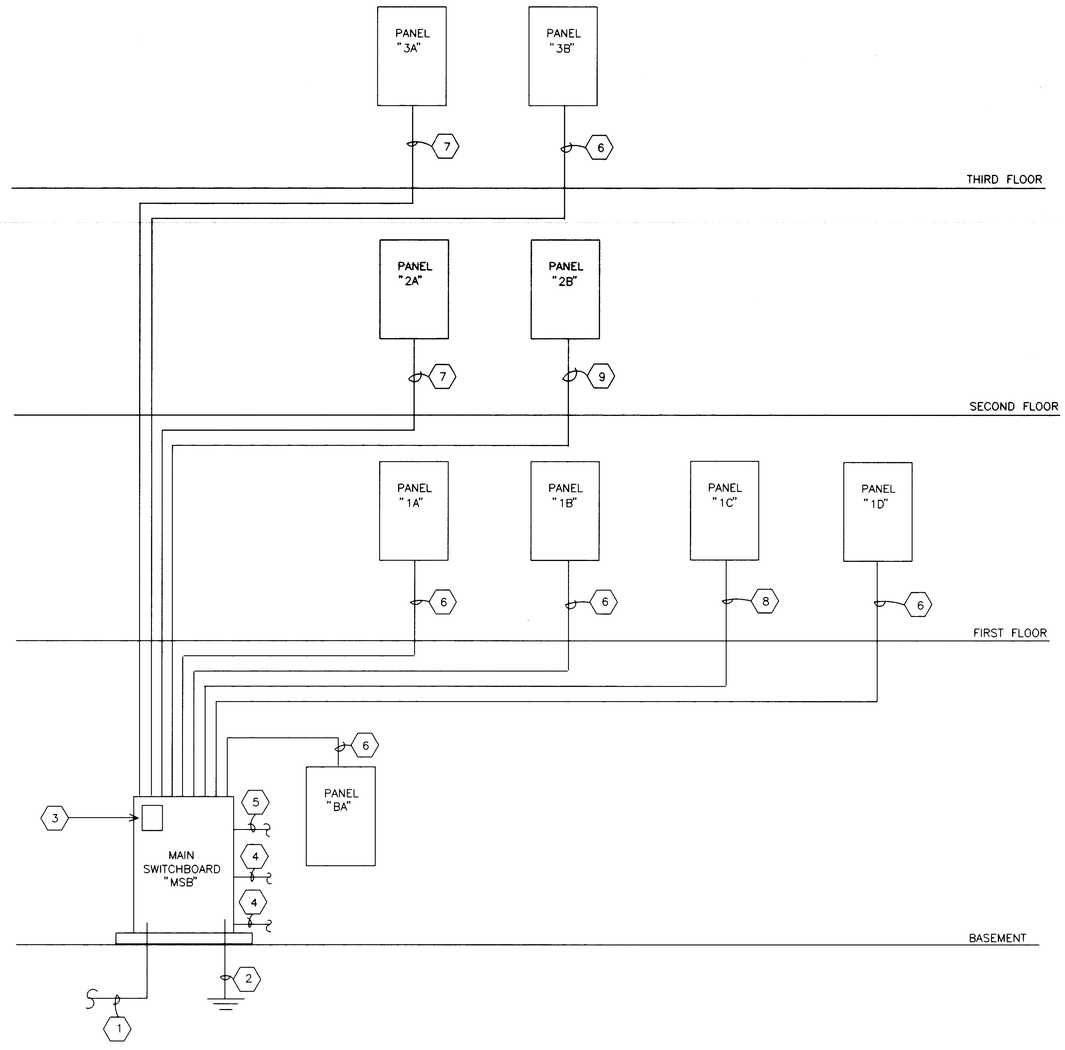

ELECTRICAL POWER RISER DIAGRAM

N.T.S.

KEYED NOTES (FOR FIRE ALARM RISER DIAGRAM ONLY)

1. TO EVAP. COOLER SHUT DOWN FAN CONTROL.
2. TO TAMPER SWITCH. FOR LOCATION SEE MECHANICAL DRAWING.
3. TO CIRCUIT BA-14.
4. TO ANTENN, ANTENNA SHALL BE MOUNTED ON ROOF.
5. TO FLOW SWITCH. FOR LOCATION SEE MECHANICAL DRAWING.
6. TRANSMIT TWO ZONE (ALARM AND TROUBLE) FOR: 1. FIRE SPRINKLER SYSTEM. 2. ALL OTHER GENERAL FIRE ALARMS.
7. TO PIV SEE SHEET C23 FOR DETAIL, AND UTILITY PLAN FOR LOCATION.

FIRE ALARM ZONE SCHEDULE	
ZONE	DESCRIPTION
1	BASEMENT PULL STATIONS, CLOSER/HOLDER, CORRIDOR AND STAIRWELL SMOKE DETECTORS.
2	FIRST FLOOR PULL STATIONS, CLOSER/HOLDER, CORRIDOR AND STAIRWELL SMOKE DETECTORS.
3	SECOND FLOOR PULL STATIONS, CORRIDOR AND STAIRWELL SMOKE DETECTORS.
4	THIRD FLOOR PULL STATIONS, CORRIDOR AND STAIRWELL SMOKE DETECTORS.
5	MECHANICAL ROOM PULL STATION.
6	FLOW SWITCH.
7	SUPERVISORY ZONE – SERVING VALVE TAMPER SWITCHES.
8	SPARE ZONE.

GENERAL NOTES (FOR FIRE ALARM RISER DIAGRAM ONLY)

1. FIRE ALARM CONTROL PANEL SHALL BE AS MANUFACTURED BY MONACO, FIRELITE, MIRTONE, SIMPLEX, STANDARD ELECTRIC, AND PYROTRONICS OR APPROVED EQUAL.
2. RADIO FIRE ALARM SYSTEM SHALL BE COMPATIBLE WITH EXISTING MONACO 500+ SYSTEM, FREQUENCY IS 138.925 MHZ, TRANSCEIVER SHALL BE BT2-3 OR BT2-4 TYPE OR APPROVED EQUAL.
3. QUANTITY OF CABLES AND SIZE OF CONDUIT FOR FIRE ALARM SYSTEM AS REQUIRED AND PER MANUFACTURER'S RECOMMENDATION. AND ALL FIRE ALARM CONDUITS SHALL BE 3/4 " MINIMUM.
4. PROVIDE SURGE ARRESTER WITH GROUNDING FOR ANTENNA. ANTENNA SHALL BE MOUNTED ON ROOF PARAPET, PROVIDE PROPER SUPPORT AS REQUIRED.

KEYED NOTES (FOR POWER RISER DIAGRAM ONLY)

1. 3 RUN EACH WITH 4#300 KCMIL-3"C. SEE SITE PLAN FOR CONTINUATION.
2. 1#3/0 GROUND IN 3/4 " CONDUIT.
3. KILOWATT-HOUR METER WITH MULTIPLIER, PROVIDE SEPARATE CUBICAL FOR C.T. COMPARTMENT AS REQUIRED.
4. TO V-3, SEE FIRST FLOOR POWER PLAN.
5. TO V-2, SEE FIRST FLOOR POWER PLAN.
6. 4#1-1 1/2 "C.
7. 4#1/0-2"C.
8. 4#2/0-2"C.
9. 4#6-1"C.

SYM	D.O. NO.	ACTION	DATE	DESCRIPTION OF REVISION
			30APR96	REVISED AS-BUILT
		P00007	23JAN95	PROVIDE PRESSURE SWITCH AT ALL RISER LOCATIONS
1	G1546	PM	18OCT94	NEW ENTRANCE FIRE ALARM MANUAL STATION

ENGINEERING DIVISION
DESIGN BRANCH

U.S. ARMY ENGINEER DISTRICT, FORT WORTH
CORPS OF ENGINEERS
FORT WORTH, TEXAS

DESIGNED BY: D. WONG, P.E.
DRAWN BY: D. WONG, P.E.
REVIEWED BY: J. STORY, P.E.
SUBMITTED BY: JACK D. STORY, P.E. CHIEF, ELECTRICAL SECTION

FORT BLISS, TEXAS

ENLISTED BARRACKS W/O DINING FACILITIES II
FY 92 PN0036097

POWER AND FIRE ALARM RISER DIAGRAM
BUILDING 2447

SOL. NO. DACA63-94-B-0067 DATED: FEB 1994
CONTR. NO. DACA63-94-C-0120
DRAWING NUMBER FB-QE
SHEET NO. E26.1 OF 43
SEQUENCE NO. 194
CADD FILE NAME: EEB7P7D.546
SUPERSEDES SHEET E26

"DRAWING OF WORK AS BUILT"

CONTR. NO. DACA63-94-C-0120

Wed Jul 10 13:57:52 1996

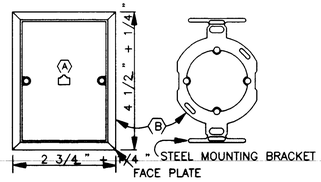

(A) FLUSH MOUNTED CONNECTING BLOCK CONSISTING OF AN 8- CONDUCTOR, RJ-45 JACK CONNECTED TO A DISPLACEMENT CONNECTOR WHICH ACCEPTS 22-26 AWG INSIDE WIRE.

(B) FACEPLATE KIT (AT&T NO. 65-50 OR APPROVED EQUAL) CONSISTING OF A RECTANGULAR IVORY FACEPLATE AND STEEL MOUNTING BRACKET FOR INSTALLING CONNECTING BLOCK IN STANDARD ELECTRIC BOX.

NOTE: EACH RJ 45 JACK TO BE WIRED WITH STANDARD INDOOR TELEPHONE CABLE, 4 PAIR, 24 AWG, TINNED COPPER, PVC INSULATED CONDUCTORS CABLED, CHROME PVC JACKET COLOR CODED (1) WHITE/BLUE (2) WHITE/ORANGE (3) WHITE/GREEN (4) WHITE/BROWN. TERMINATE CABLES IN TYPE 110 TERMINAL BLOCKS ON TELEPHONE CABINET.

TELEPHONE OUTLET DETAIL

N.T.S.

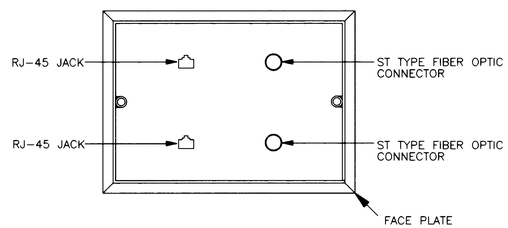

NOTES:

1. EACH COMMUNICATION OUTLET SHALL CONSIST OF AN OUTLET BOX WITH FACEPLATE AND TWO RJ-45 MODULAR JACKS AND TWO TYPE ST FIBER OPTIC CONNECTORS.
2. CONNECT ONE 4-PAIR TELEPHONE CABLE TO EACH RJ-45 JACK AND CONNECT ONE 62.5 MICRON MULTIMODE FIBER OPTIC CABLE TO EACH TYPE ST CONNECTOR.
3. EACH FIBER OPTIC CABLE AT THE OUTLET SHALL BE CONNECTED TO A FIBER OPTIC PATCH PANEL MOUNTED ON A TELEPHONE BACKBOARD.

COMMUNICATION OUTLET DETAIL

N.T.S.

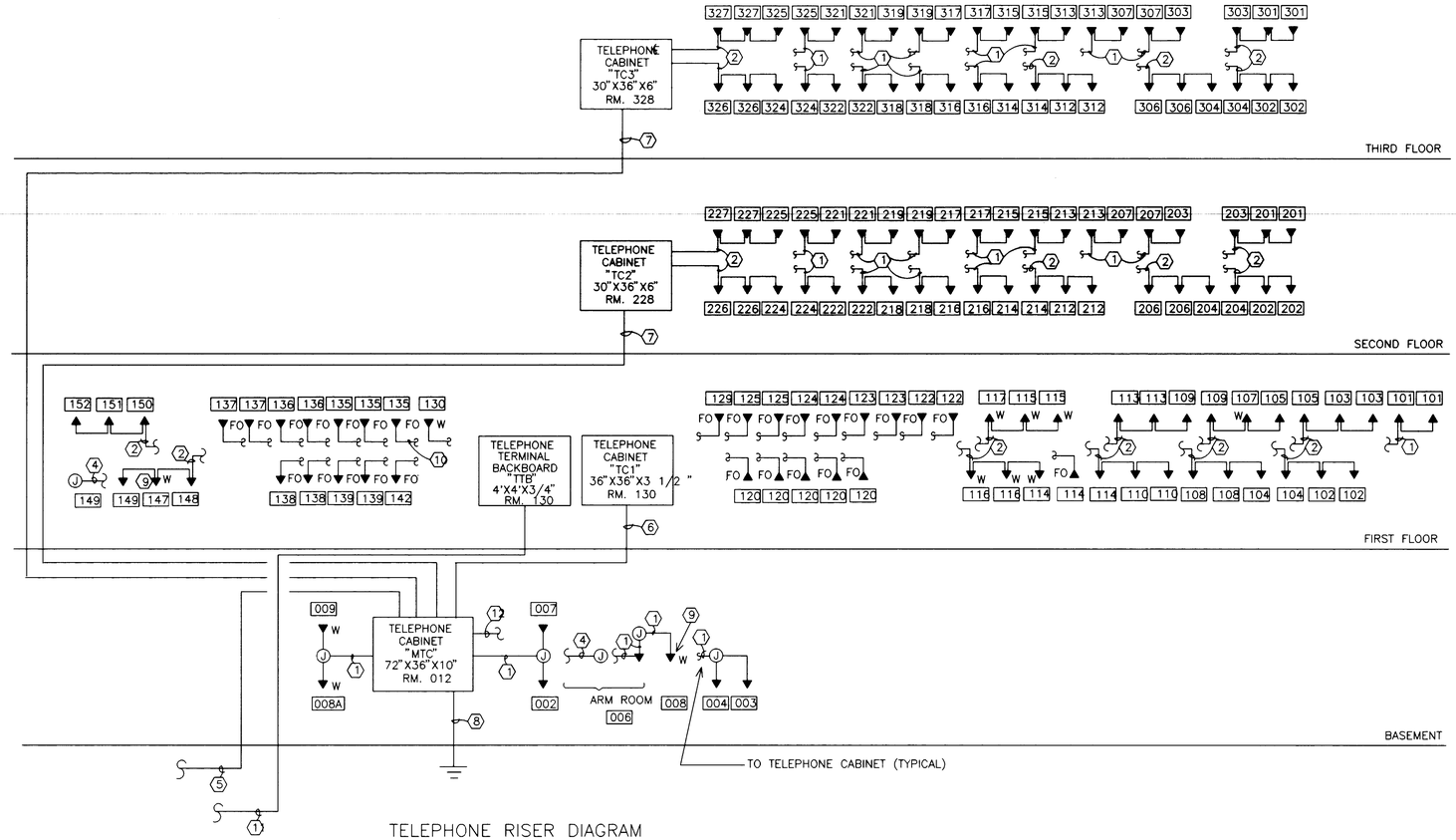

TELEPHONE RISER DIAGRAM

SCHEMATIC ONLY

KEYED NOTES:

1. 1 1/2 " CONDUIT WITH TELEPHONE CABLES.
2. 2" CONDUIT WITH TELEPHONE CABLES.
3. NOT USED.
4. 3/4 " RIGID STEEL CONDUIT.
5. 50 PAIR PE-89 TELEPHONE CABLE IN 4" CONDUIT WITH 4-1" INNER DUCT. 1-4" SPARE CONDUIT WITH PULL WIRE, FOR CONTINUATION SEE SITE PLAN.
6. 100 PAIR PE-71, 24 AWG TELEPHONE CABLE IN 3" CONDUIT.
7. 50 PAIR PE-71, 24 AWG TELEPHONE CABLE IN 2" CONDUIT.
8. #6 COPPER WIRE TO BUILDING GROUND.
9. PHONE FOR CALLING MILITARY POLICE FOR ENTRY INTO ARMS ROOM, NOT FOR GENERAL USE.
10. 1" CONDUIT WITH FIBER OPTIC CABLES TERMINATED AT PATCH PANEL, AND TELEPHONE CABLES TERMINATED AT TELEPHONE CABINET (TYP.).
11. 24 STRAND SM FO CABLE IN 4" CONDUIT. SEE SITE PLAN EU-2 FOR CONTINUATION.
12. 1-4" CONDUIT WITH PULL WIRE TO FUTURE DTC IN BOILER ROOM 009.

GENERAL NOTES:

1. PROVIDE NEMA 12 ENCLOSURE FOR ALL TELEPHONE CABINETS.
2. LOCATION OF TELEPHONE OUTLETS SEE COMMUNICATION FLOOR PLAN.
3. WIRING RUNS NOT IDENTIFIED SHALL CONSIST OF 3/4 " CONDUIT.

SYM	D.O. NO.	ACTION	DATE	DESCRIPTION OF REVISION
			30APR96	REVISED AS-BUILT
3		AMT 0005	11APR94	REVISED SIZE OF CONDUIT

ENGINEERING DIVISION
DESIGN BRANCH

U.S. ARMY ENGINEER DISTRICT, FORT WORTH
CORPS OF ENGINEERS
FORT WORTH, TEXAS

DESIGNED BY: D. WONG, P.E.
DRAWN BY: D. WONG, P.E.
REVIEWED BY: J. STORY, P.E.
SUBMITTED BY: JACK D. STORY, P.E. CHIEF, ELECTRICAL SECTION

FORT BLISS, TEXAS

ENLISTED BARRACKS W/O DINING FACILITIES II
FY 92 PN0036097

TELEPHONE RISER DIAGRAM
BUILDING 2447

SOL. NO. DACA63-94-B-0067 DATED: FEB 1994
CONTR. NO. DACA63-94-C-0120
DRAWING NUMBER FB-QE
SHEET NO. E27 OF 43
SEQUENCE NO. 195
CADD FILE NAME: EEB7T7D.DGN

"DRAWING OF WORK AS BUILT"

CONTR. NO. DACA63-94-C-0120

Wed Jul 10 15:17:23 1996

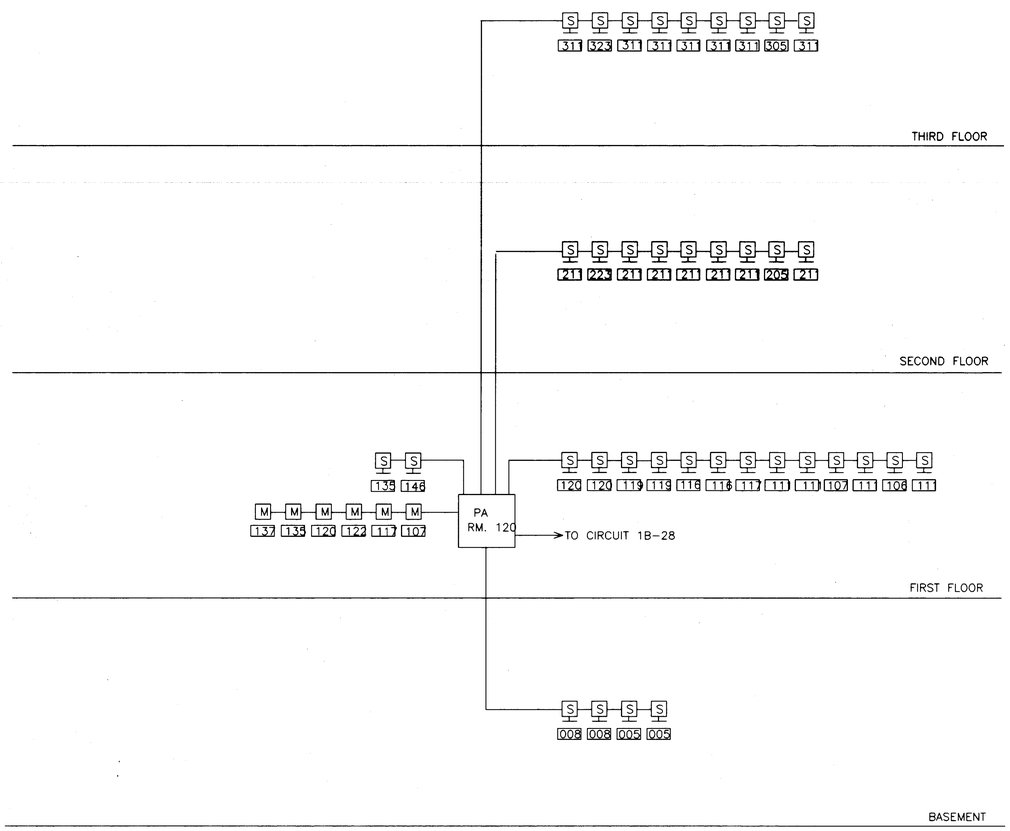

PUBLIC ADDRESS RISER DIAGRAM

SCHEMATIC ONLY

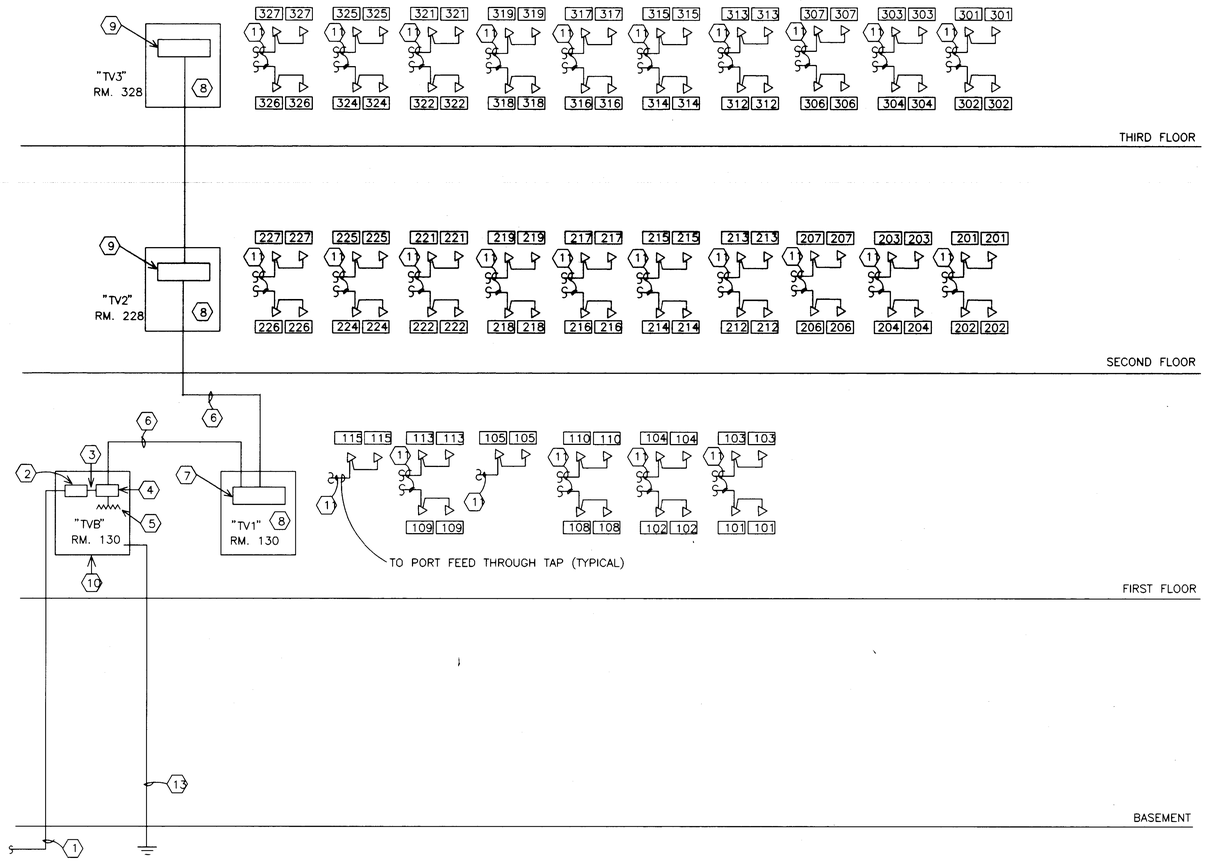

CABLE TV RISER DIAGRAM

SCHEMATIC ONLY

KEYED NOTES:

1. 1-2" CONDUIT, REFER TO EXTERIOR SITE PLAN FOR CONTINUATION.
2. HEAD END AMPLIFIER - BY CABLE T.V. COMPANY.
3. 4 COAXIAL CABLES IN 1 1/4 " CONDUIT.
4. 4 WAY SPLITTER.
5. 75 OHM TERMINATOR.
6. SINGLE COAXIAL CABLE IN 2" CONDUIT.
7. 1-31 PORT FEED THROUGH TAP WITH 75 OHM TERMINATOR.
8. PULL BOX, SIZE AS REQUIRES TO ACCOMODATE REQUIREMENTS OF CABLE T.V. SYSTEM.
9. 1-42 PORT FEED THROUGH TAP WITH 75 OHM TERMINATOR.
10. T.V. SIGNAL DISTRIBUTION CABINET - 24"X20"X4"
11. 2 COAXIAL CABLES IN 1" CONDUIT.
12. NOT USED.
13. #6 COPPER WIRE TO BUILDING GROUND.

SYM	D.O. NO.	ACTION	DATE	DESCRIPTION OF REVISION
			30APR96	REVISED AS-BUILT
1		AM#0002	10MAR94	REVISE KEYED NOTE 6

ENGINEERING DIVISION
DESIGN BRANCH

U.S. ARMY ENGINEER DISTRICT, FORT WORTH
CORPS OF ENGINEERS
FORT WORTH, TEXAS

DESIGNED BY: D. WONG, P.E.
DRAWN BY: D. WONG, P.E.
REVIEWED BY: J. STORY, P.E.
SUBMITTED BY: JACK D. STORY, P.E.
CHIEF, ELECTRICAL SECTION

FORT BLISS, TEXAS

ENLISTED BARRACKS W/O DINING FACILITIES II
FY 92 PN0036097

CABLE TV AND PUBLIC ADDRESS RISER
DIAGRAM, BUILDING 2447

SOL. NO. DACA63-94-B-0067 DATED: FEB 1994
CONTR. NO. DACA63-94-C-0120
DRAWING NUMBER FB-QE
SHEET NO. E28 OF 43
SEQUENCE NO. 196
CONTR. NO. DACA63-94-C-0120

CADD FILE NAME: EEB7C7D.DGN

"DRAWING OF WORK AS BUILT"

Wed Jul 10 15:20:36 1996

PANEL MSB — VOLTS 120/208 — PHASE 3 — WIRES 4 — MCB 800A

CIRCUIT BREAKER INTERRUPTING RATING 35,000 AMPS.

CKT. NO.	TRIP AMPS	NO. POLES	LOAD SERVED	PHASE LOAD V.A. A	B	C	LOAD SERVED	CKT. NO.	TRIP AMPS	NO. POLES
1	150	3	V-3	9246 / 9246			V-3	2	150	3
3	–	–	–		9246 / 9246		–	4	–	–
5	–	–	–			9246 / 9246	–	6	–	–
7	80	3	V-2	4912 / 6268			PANEL BA	8	100	3
9	–	–	–		4912 / 6268		–	10	–	–
11	–	–	–			4912 / 6192	–	12	–	–
13	100	3	PANEL 1A	7704 / 18000			PANEL 1C	14	175	3
15	–	–	–		7548 / 18000		–	16	–	–
17	–	–	–			8038 / 15000	–	18	–	–
19	100	3	PANEL 1B	11463 / 7320			PANEL 1D	20	100	3
21	–	–	–		11580 / 7222		–	22	–	–
23	–	–	–			10618 / 7052	–	24	–	–
25	150	3	PANEL 2A	17352 / 17352			PANEL 3A	26	150	3
27	–	–	–		17536 / 17536		–	28	–	–
29	–	–	–			17594 / 17594	–	30	–	–
31	50	3	PANEL 2B	1312 / 1312			PANEL 3B	32	50	3
33	–	–	–		1020 / 1020		–	34	–	–
35	–	–	–			1924 / 1924	–	36	–	–
37								38		
39								40		
41								42		
			TOTAL	112203	111134	109260				

TOTAL CONNECTED LOAD 332.6 KVA — DEMAND LINE AMPS 769.9

ESTIMATED DEMAND LOAD 277.4 KVA

PANEL 1B — VOLTS 120/208 — PHASE 3 — WIRES 4 — MLO 225A

CIRCUIT BREAKER INTERRUPTING RATING 10,000 AMPS.

CKT. NO.	TRIP AMPS	NO. POLES	LOAD SERVED	PHASE LOAD V.A. A	B	C	LOAD SERVED	CKT. NO.	TRIP AMPS	NO. POLES
1	20	1	8-HWUH-1	1373 / 1360			RECEPTACLES & FAN	2	20	1
3	20	1	JSIIDS		800 / 1500		DEHUMIDIFIER RECEPTACLE	4	20	1
5	20	1	ICE MACHINE			1000 / 138	3-HWUH-1	6	20	1
7	20	1	DUPLEX RECEPTACLES	1080 / 900			DUPLEX RECEPTACLES	8	20	1
9	20	1	DUPLEX RECEPTACLES		1080 / 720		DUPLEX RECEPTACLES	10	20	1
11	20	1	2-EF-2 & 1-EF-1			120 / 720	DUPLEX RECEPTACLES	12	20	1
13	20	1	DUPLEX RECEPTACLES	1080 / 720			DUPLEX RECEPTACLES	14	20	1
15	20	1	DUPLEX RECEPTACLES		1260 / 1080		DUPLEX RECEPTACLES	16	20	1
17	20	1	DUPLEX RECEPTACLES			900 / 1080	DUPLEX RECEPTACLES	18	20	1
19	20	1	RECEPTACLE & BELL	910 / 180			DUPLEX RECEPTACLES	20	20	1
21	20	1	MICROWAVE		1000 / 540		DUPLEX RECEPTACLES	22	20	1
23	20	1	MICROWAVE			1000 / 500	9-FC	24	20	1
25	20	1	DUPLEX RECEPTACLES	900 / 180			10-FC	26	20	1
27	20	1	EWC		1000 / 500		P.A.	28	20	1
29	20	1	DUPLEX RECEPTACLES			1080 / 1080	DUPLEX RECEPTACLES	30	20	1
31	20	1	6-FC	720 / 1000			EWC	32	20	1
33	20	1	SPARE		1000 / 1000		SPARE	34	20	1
35	20	1	SPARE			1000 / 1000	SPARE	36	20	1
37	20	1	SPARE	1000 / 100			MOTORIZED DAMPER	38	20	1
39	20	1	SPRINKLER CONTROLLER		100 / –		SPACE ONLY	40	–	–
41	20	1	MASTER CONTROLLER			100 / –	SPACE ONLY	42	–	–
			TOTAL	11463	11580	10618				

TOTAL CONNECTED LOAD 33.2 KVA — DEMAND LINE AMPS 76.3

ESTIMATED DEMAND LOAD 27.5 KVA

PANEL 2A/3A — VOLTS 120/208 — PHASE 3 — WIRES 4 — MLO 225A

CIRCUIT BREAKER INTERRUPTING RATING 10,000 AMPS.

CKT. NO.	TRIP AMPS	NO. POLES	LOAD SERVED	PHASE LOAD V.A. A	B	C	LOAD SERVED	CKT. NO.	TRIP AMPS	NO. POLES
1	20	1	MODULE C	1452 / 1372			MODULE A	2	20	1
3	20	1	MODULE C & RECEPT.		1552 / 1368		MODULE A	4	20	1
5	20	1	MODULE C			1368 / 1548	MODULE A & RECEPT.	6	20	1
7	20	1	MODULE D	1320 / 1372			MODULE A	8	20	1
9	20	1	MODULE D		1394 / 1368		MODULE A	10	20	1
11	20	1	MODULE D			1394 / 1368	MODULE A	12	20	1
13	20	1	MODULE F	1452 / 1552			MODULE A & RECEPT.	14	20	1
15	20	1	MODULE F		1372 / 1372		MODULE A	16	20	1
17	20	1	MODULE F			1548 / 1368	MODULE A	18	20	1
19	20	1	MODULE B	1320 / 1320			MODULE B	20	20	1
21	20	1	MODULE B		1394 / 1394		MODULE B	22	20	1
23	20	1	MODULE B			1394 / 1394	MODULE B	24	20	1
25	20	1	MODULE A	1372 / 1372			MODULE A	26	20	1
27	20	1	MODULE A		1368 / 1368		MODULE A	28	20	1
29	20	1	MODULE A			1368 / 1368	MODULE A	30	20	1
31	20	1	MODULE E	1008 / 1000			SPARE	32	20	1
33	20	1	MODULE E & RECEPT.		1228 / 1000		SPARE	34	20	1
35	20	1	10-FC & HWUH-1 &EF-1			476 / 1000	SPARE	36	20	1
37	20	1	11-FC	440 / 1000			SPARE	38	20	1
39	20	1	DUPLEX RECEPTACLES		360 / 1000		SPARE	40	20	1
41	20	1	SPARE			1000 / 1000	SPARE	42	20	1
			TOTAL	17352	17536	17594				

TOTAL CONNECTED LOAD 52.5 KVA — DEMAND LINE AMPS 121.1

ESTIMATED DEMAND LOAD 43.6 KVA

PANEL BA — VOLTS 120/208 — PHASE 3 — WIRES 4 — MLO 100A

CIRCUIT BREAKER INTERRUPTING RATING 22,000 AMPS.

CKT. NO.	TRIP AMPS	NO. POLES	LOAD SERVED	PHASE LOAD V.A. A	B	C	LOAD SERVED	CKT. NO.	TRIP AMPS	NO. POLES
1	20	1	DUPLEX RECEPTACLES	720 / 1500			DEHUMIDIFIER & RECEPT.	2	20	1
3	20	1	DUPLEX RECEPTACLES		720 / 1180		RECEPT. & FAN	4	20	1
5	20	1	JSIIDS			800 / 180	DUPLEX RECEPTACLES	6	20	1
7	20	1	8-HWUH-1	168 / 1260			LIGHTING	8	20	1
9	20	1	LIGHTING		420 / 1152		LIGHTING	10	20	1
11	20	1	LIGHTING			1032 / 720	DUPLEX RECEPTACLES	12	20	1
13	20	3	HWP-3	990 / 500			FIRE ALARM CONTROL	14	20	1
15	–	–	–		990 / 336		DCP-1	16	20	1
17	–	–	–			990 / 100	BOILER CONTROLLER	18	20	1
19	20	3	SP-1	290 / 336			DCP-3	20	20	1
21	–	–	–		290 / 180		DUPLEX RECEPTACLE	22	20	1
23	–	–	–			290 / 1000	SPARE	24	20	1
25	20	1	BATTERY	20 / 1000			SPARE	26	20	1
27	–	–	SPACE ONLY		– / 1000		SPARE	28	20	1
29	–	–	SPACE ONLY			– / 1000	SPARE	30	20	1
31								32		
33								34		
35								36		
37								38		
39								40		
41								42		
			TOTAL	6984	6268	6112				

TOTAL CONNECTED LOAD 19.4 KVA — DEMAND LINE AMPS 47.8

ESTIMATED DEMAND LOAD 17.2 KVA

PANEL 1C — VOLTS 120/208 — PHASE 3 — WIRES 4 — MLO 225A

CIRCUIT BREAKER INTERRUPTING RATING 22,000 AMPS.

CKT. NO.	TRIP AMPS	NO. POLES	LOAD SERVED	PHASE LOAD V.A. A	B	C	LOAD SERVED	CKT. NO.	TRIP AMPS	NO. POLES
1	30	2	DRYER	2500 / 2500			DRYER	2	30	2
3	–	–	–		2500 / 2500		–	4	–	–
5	30	2	DRYER			2500 / 2500	DRYER	6	30	2
7	–	–	–	2500 / 2500			–	8	–	–
9	30	2	DRYER		2500 / 2500		DRYER	10	30	2
11	–	–	–			2500 / 2500	–	12	–	–
13	30	2	DRYER	2500 / 2500			DRYER	14	30	2
15	–	–	–		2500 / 2500		–	16	–	–
17	20	1	WASHER			1000 / 1000	WASHER	18	20	1
19	20	1	WASHER	1000 / 1000			WASHER	20	20	1
21	20	1	WASHER		1000 / 1000		WASHER	22	20	1
23	20	1	SPARE			1000 / 1000	WASHER	24	20	1
25	20	1	SPARE	1000 / –			SPACE ONLY	26	–	–
27	20	1	SPARE		1000 / –		SPACE ONLY	28	–	–
29	20	1	SPARE			1000 / –	SPACE ONLY	30	–	–
31								32		
33								34		
35								36		
37								38		
39								40		
41								42		
			TOTAL	18000	18000	15000				

TOTAL CONNECTED LOAD 51.0 KVA — DEMAND LINE AMPS 115.5

ESTIMATED DEMAND LOAD 41.6 KVA

PANEL 2B/3B — VOLTS 120/208 — PHASE 3 — WIRES 4 — MLO 60A

CIRCUIT BREAKER INTERRUPTING RATING 10,000 AMPS.

CKT. NO.	TRIP AMPS	NO. POLES	LOAD SERVED	PHASE LOAD V.A. A	B	C	LOAD SERVED	CKT. NO.	TRIP AMPS	NO. POLES
1	20	1	LIGHTING	312 / 1000			SPARE	2	20	1
3	20	1	BATTERY		20 / 1000		SPARE	4	20	1
5	20	1	LIGHTING			924 / 1000	SPARE	6	20	1
7	–	–	SPACE ONLY	– / –			SPACE ONLY	8	–	–
9	–	–	SPACE ONLY		– / –		SPACE ONLY	10	–	–
11	–	–	SPACE ONLY			– / –	SPACE ONLY	12	–	–
13								14		
15								16		
17								18		
19								20		
21								22		
23								24		
25								26		
27								28		
29								30		
31								32		
33								34		
35								36		
37								38		
39								40		
41								42		
			TOTAL	1312	1020	1924				

TOTAL CONNECTED LOAD 4.3 KVA — DEMAND LINE AMPS 11.8

ESTIMATED DEMAND LOAD 4.3 KVA

PANEL 1A — VOLTS 120/208 — PHASE 3 — WIRES 4 — MLO 100A

CIRCUIT BREAKER INTERRUPTING RATING 10,000 AMPS.

CKT. NO.	TRIP AMPS	NO. POLES	LOAD SERVED	PHASE LOAD V.A. A	B	C	LOAD SERVED	CKT. NO.	TRIP AMPS	NO. POLES
1	20	1	MODULE A	1372 / 1452			MODULE C	2	20	1
3	20	1	MODULE A		1368 / 1372		MODULE C	4	20	1
5	20	1	MODULE A & RECEPT.			1548 / 1548	MODULE C & RECEPT.	6	20	1
7	20	1	MODULE D	1320 / 1188			MODULE E & RECEPT.	8	20	1
9	20	1	MODULE D		1394 / 1048		MODULE E	10	20	1
11	20	1	MODULE D			1394 / 1000	SPARE	12	20	1
13	20	1	MODULE A	1372 / 1000			SPARE	14	20	1
15	20	1	MODULE A		1368 / 1000		SPARE	16	20	1
17	20	1	MODULE A & RECEPT.			1548 / 1000	SPARE	18	20	1
19	–	–	SPACE ONLY	– / –			SPACE ONLY	20	–	–
21	–	–	SPACE ONLY		– / –		SPACE ONLY	22	–	–
23	–	–	SPACE ONLY			– / –	SPACE ONLY	24	–	–
25	–	–	SPACE ONLY	– / –			SPACE ONLY	26	–	–
27	–	–	SPACE ONLY		– / –		SPACE ONLY	28	–	–
29	–	–	SPACE ONLY			– / –	SPACE ONLY	30	–	–
31								32		
33								34		
35								36		
37								38		
39								40		
41								42		
			TOTAL	7704	7548	8038				

TOTAL CONNECTED LOAD 23.3 KVA — DEMAND LINE AMPS 53.9

ESTIMATED DEMAND LOAD 19.4 KVA

PANEL 1D — VOLTS 120/208 — PHASE 3 — WIRES 4 — MLO 100A

CIRCUIT BREAKER INTERRUPTING RATING 10,000 AMPS.

CKT. NO.	TRIP AMPS	NO. POLES	LOAD SERVED	PHASE LOAD V.A. A	B	C	LOAD SERVED	CKT. NO.	TRIP AMPS	NO. POLES
1	20	1	LIGHTING	1008 / 1596			LIGHTING	2	20	1
3	20	1	LIGHTING		516 / 1176		LIGHTING	4	20	1
5	20	1	LIGHTING			1170 / 924	LIGHTING	6	20	1
7	20	1	LIGHTING	210 / 1008			LIGHTING	8	20	1
9	20	1	LIGHTING		908 / 1008		LIGHTING	10	20	1
11	20	1	LIGHTING			504 / 504	LIGHTING	12	20	1
13	20	2	LIGHTING	920 / 1008			LIGHTING	14	20	1
15	–	–	–		920 / 1356		LIGHTING	16	20	1
17	20	2	LIGHTING			270 / 1880	LIGHTING	18	20	1
19	–	–	–	270 / 300			LIGHTING	20	20	2
21	20	1	LIGHTING		644 / 300		–	22	–	–
23	20	1	SPARE			1000 / 1000	SPARE	24	20	1
25	20	1	SPARE	1000 / –			SPACE ONLY	26	–	–
27	20	1	SPARE		1000 / –		SPACE ONLY	28	–	–
29	–	–	SPACE ONLY			– / –	SPACE ONLY	30	–	–
31								32		
33								34		
35								36		
37								38		
39								40		
41								42		
			TOTAL	7320	7222	7052				

TOTAL CONNECTED LOAD 21.6 KVA — DEMAND LINE AMPS 60.0

ESTIMATED DEMAND LOAD 21.6 KVA

SYM	D.O. NO.	ACTION	DATE	DESCRIPTION OF REVISION
			30APR96	REVISED AS-BUILT
1	G1546	PM	18OCT94	CHANGED CIRCUIT NO. 32 PANEL 1B

ENGINEERING DIVISION
DESIGN BRANCH

U.S. ARMY ENGINEER DISTRICT, FORT WORTH
CORPS OF ENGINEERS
FORT WORTH, TEXAS

DESIGNED BY: D. WONG, P.E.
DRAWN BY: D. WONG, P.E.
REVIEWED BY: J. STORY, P.E.

FORT BLISS, TEXAS

ENLISTED BARRACKS W/O DINING FACILITIES II
FY 92 PN0036097

PANELBOARD SCHEDULE
BUILDING 2447

SUBMITTED BY: JACK D. STORY, P.E.
CHIEF, ELECTRICAL SECTION

SOL. NO. DACA63-94-B-0067 DATED: FEB 1994
CONTR. NO. DACA63-94-C-0120
DRAWING NUMBER FB-QE
SHEET NO. E29.10F 43
SEQUENCE NO. 197

CADD FILE NAME: EEB7P7N.546
SUPERSEDES SHEET E29

"DRAWING OF WORK AS BUILT"

CONTR. NO. DACA63-94-C-0120

Wed Jul 10 15:24:44 1996

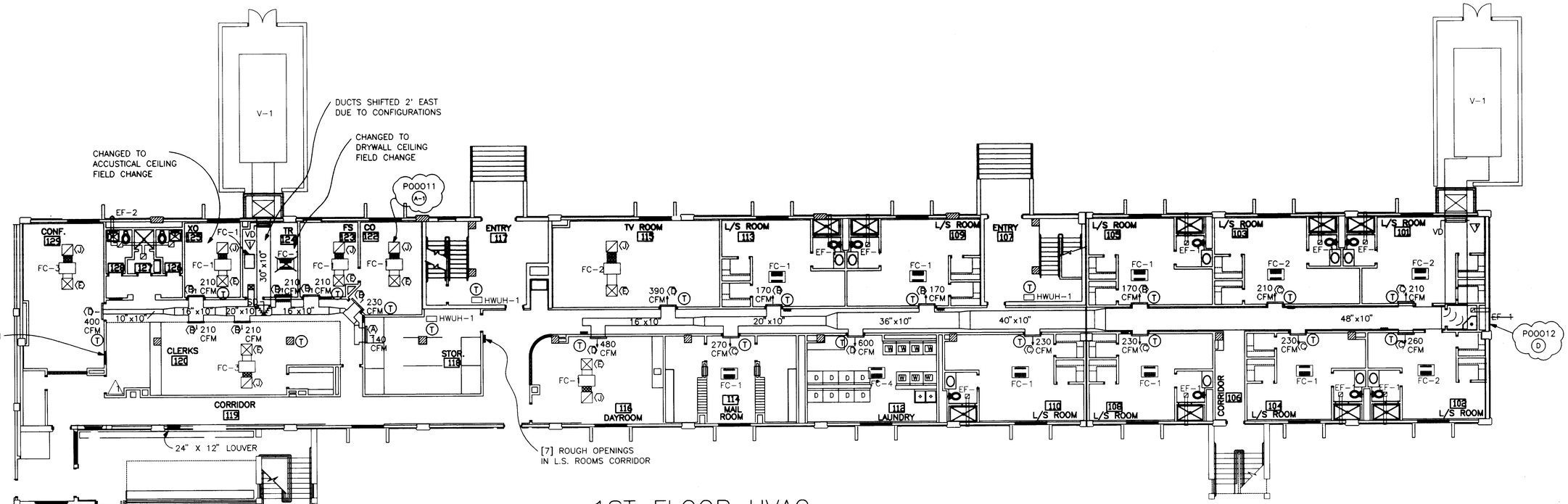

1ST FLOOR HVAC

SCALE 1/8 " = 1'-0"

SCALE: 1/8" = 1'-0"

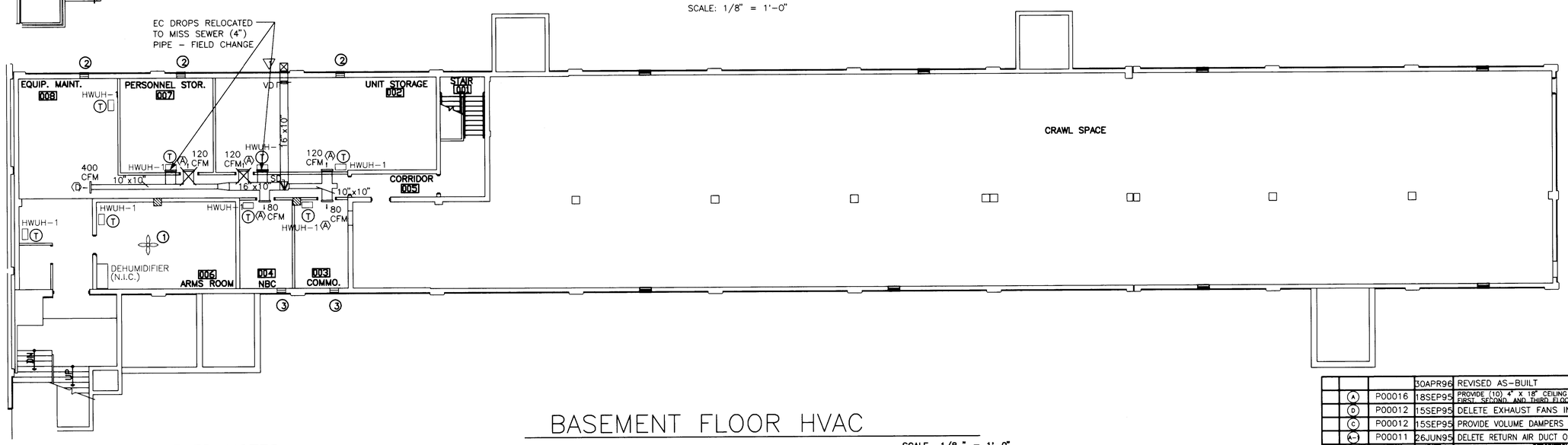

BASEMENT FLOOR HVAC

SCALE 1/8 " = 1'-0"

SCALE: 1/8" = 1'-0"

KEYED NOTES

1. 52" CEILING FAN, COLOR WHITE, MOUNTED ON CONCRETE CEILING WITH ON-OFF SWITCH LOCATED NEXT TO DOOR. FIVE YEAR WARRANTY.
2. 18"x18" WEATHERPROOF WALL LOUVER WITH BIRDSCREEN AND BACKDRAFT DAMPER.
3. 18"x18" WEATHERPROOF WALL LOUVER WITH BIRDSCREEN AND BACKDRAFT DAMPER. PROVIDE SECURITY GRILLE CONSISTING OF 1/2 " HARDENED STEEL BARS 4" APART. SEE DETAIL.

NORTH

KEY PLAN: BLDG. 2447

SYM	D.O. NO.	ACTION	DATE	DESCRIPTION OF REVISION
			30APR96	REVISED AS-BUILT
	A	P00016	18SEP95	PROVIDE (10) 4" X 18" CEILING GRILLES PER FLOOR, ON THE FIRST, SECOND AND THIRD FLOOR CORRIDOR.
	D	P00012	15SEP95	DELETE EXHAUST FANS IN JANITOR'S CLOSETS.
	C	P00012	15SEP95	PROVIDE VOLUME DAMPERS IN ALL BUILDINGS (SEE M-2)
	A-	P00011	26JUN95	DELETE RETURN AIR DUCT ON FAN COIL UNITS (SEE M-2)

ENGINEERING DIVISION
DESIGN BRANCH

U.S. ARMY ENGINEER DISTRICT, FORT WORTH
CORPS OF ENGINEERS
FORT WORTH, TEXAS

DESIGNED BY: C. GIBBONS
DRAWN BY: C. GIBBONS
REVIEWED BY: F. HENDERSON
SUBMITTED BY: JACK D. OSBORNE, P.E. CHIEF, MECHANICAL SECTION

FORT BLISS, TEXAS

ENLISTED BARRACKS W/O DINING FACILITIES II
FY 92 PN 0036097

BASEMENT & 1ST FLOOR HVAC
BUILDING 2447

SOL. NO. DACA63-94-B-0067 DATED: FEB 1994
CONTR. NO. DACA63-94-C-0120
DRAWING NUMBER FB-QE
SHEET NO. M-340F 76
SEQUENCE NO. 120
CONTR. NO. DACA63-94-C-0120
CADD FILE NAME: EB7H047.DGN

"DRAWING OF WORK AS BUILT"

Tue Jul 23 15:50:53 1996

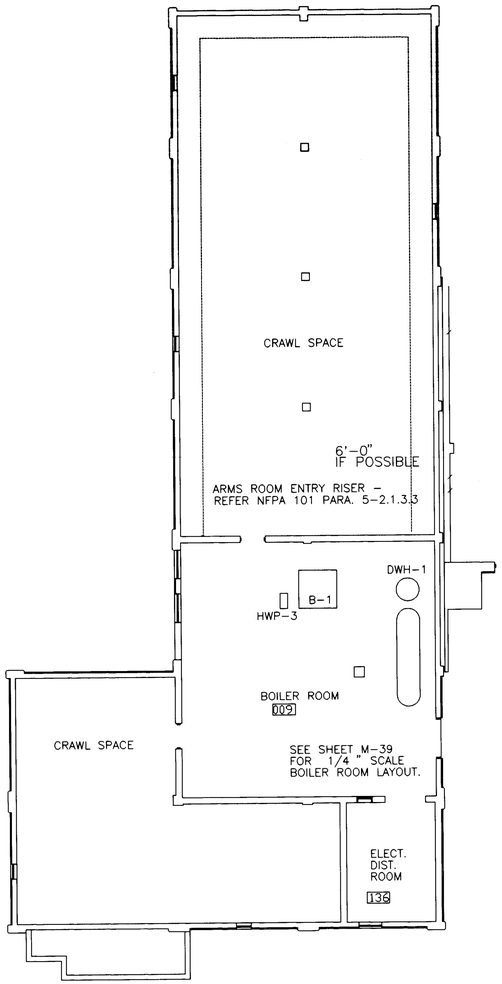

KEYED NOTES

1. 52" CEILING FAN, COLOR WHITE, MOUNTED ON CONCRETE CEILING WITH ON-OFF SWITCH LOCATED NEXT TO DOOR. FIVE YEAR WARRANTY.

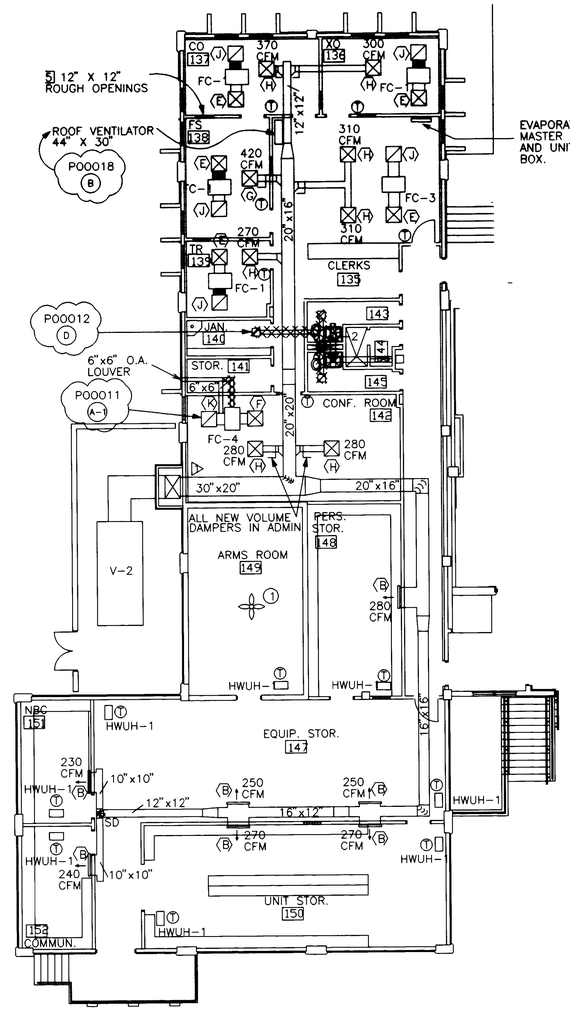

NORTH

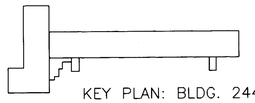

KEY PLAN: BLDG. 2447

BASEMENT FLOOR HVAC

SCALE 1/8 " = 1'-0"

-8' 0 8' 16'

SCALE: 1/8" = 1'-0"

1ST FLOOR HVAC

SCALE 1/8 " = 1'-0"

-8' 0 8' 16'

SCALE: 1/8" = 1'-0"

SYM	D.O. NO.	ACTION	DATE	DESCRIPTION OF REVISION
			30APR96	REVISED AS-BUILT
	B	P00018	19DEC95	PROVIDE A RAIN PROOF VENTILATOR THAT SHALL INCLUDE A GRAVITY BACKDRAFT DAMPER AND A NECK OF 30" X 44" NOMINAL. FIELD VERIFY.
	D	P00012	15SEP95	DELETE EXHAUST FANS IN JANITOR'S CLOSETS.
	C	P00012	15SEP95	PROVIDE VOLUME DAMPERS IN ALL BUILDINGS (SEE M-2)
	A-1	P00011	26JUN95	DELETE RETURN AIR DUCT ON FAN COIL UNITS (SEE M-2)

ENGINEERING DIVISION
DESIGN BRANCH

U.S. ARMY ENGINEER DISTRICT, FORT WORTH
CORPS OF ENGINEERS
FORT WORTH, TEXAS

DESIGNED BY: C. GIBBONS
DRAWN BY: C. GIBBONS
REVIEWED BY: F. HENDERSON

FORT BLISS, TEXAS

ENLISTED BARRACKS W/O DINING FACILITIES II
FY 92 PN 0036097

BASEMENT & 1ST FLOOR HVAC
BUILDING 2447

SUBMITTED BY:
JACK D. OSBORNE, P.E.
CHIEF, MECHANICAL SECTION

SOL. NO. DACA63-94-B-0067 DATED: FEB 1994
CONTR. NO. DACA63-94-C-0120
DRAWING NUMBER FB-QE
SHEET NO. M-33OF
SEQUENCE NO. 119

CADD FILE NAME: EB7HH047.DGN

"DRAWING OF WORK AS BUILT"

CONTR. NO. DACA63-94-C-0120

Mon Jul 8 10:44:29 1996

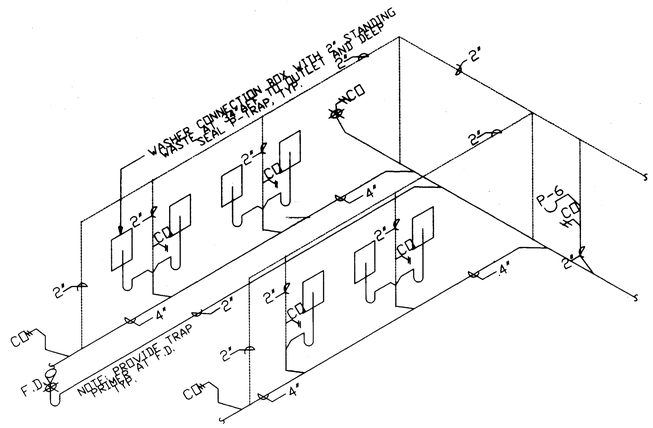

WASTE & VENT RISER – ROOM 112

NO SCALE

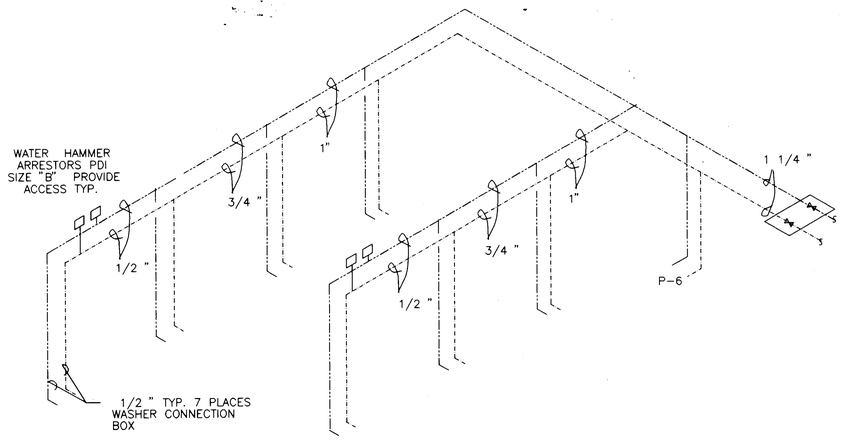

DOMESTIC WATER RISER – ROOM 112

NO SCALE

SYM	D.O. NO.	ACTION	DATE	DESCRIPTION OF REVISION
			30APR96	REVISED AS-BUILT

ENGINEERING DIVISION
DESIGN BRANCH

U.S. ARMY ENGINEER DISTRICT, FORT WORTH
CORPS OF ENGINEERS
FORT WORTH, TEXAS

DESIGNED BY: C. GIBBONS
DRAWN BY: C. GIBBONS
REVIEWED BY: F. HENDERSON
SUBMITTED BY: JACK D. OSBORNE, P.E.
CHIEF, MECHANICAL SECTION

FORT BLISS, TEXAS

ENLISTED BARRACKS W/O DINING FACILITIES II
FY 92 PN 0036097

PLUMBING RISERS
BUILDING 2447

SOL. NO. DACA63-94-B-0067 DATED: FEB 1994
CONTR. NO. DACA63-94-C-0120
DRAWING NUMBER FB-QE
SHEET NO. M-320F
SEQUENCE NO. 118

CADD FILE NAME: EB7PR247.DGN

"DRAWING OF WORK AS BUILT"

CONTR. NO. DACA63-94-C-0120

Mon Jul 8 10:43:20 1996

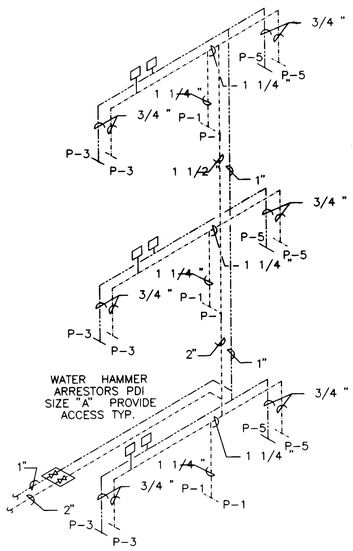

DOMESTIC WATER RISER (8 / M28 M29 | M31) (12 / M28 M29 | M31) (15 / M28 M29 | M31)

NO SCALE

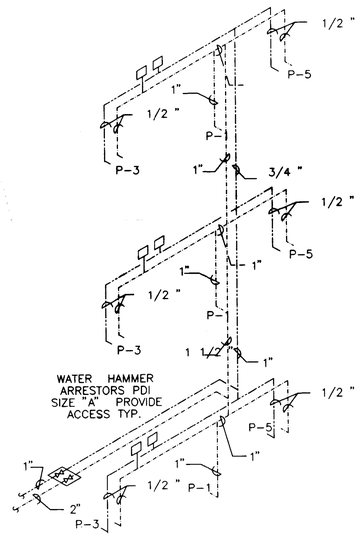

DOMESTIC WATER RISER (11 / M28 M29 | M31)

NO SCALE

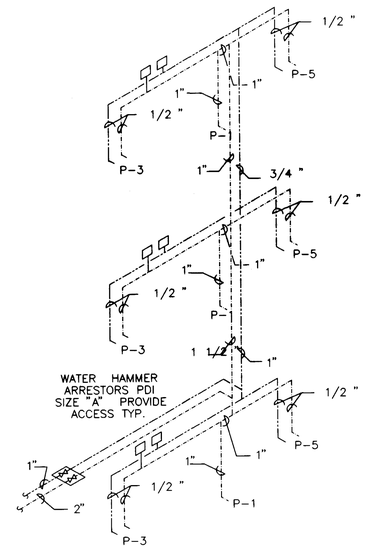

DOMESTIC WATER RISER (10 / M28 M29 | M31) (13 / M28 M29 | M31)

NO SCALE

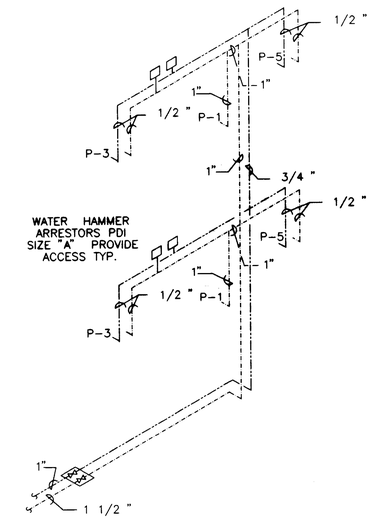

DOMESTIC WATER RISER (4 / M28 M29 | M31) (5 / M28 M29 | M31) (9 / M28 M29 | M31)

NO SCALE

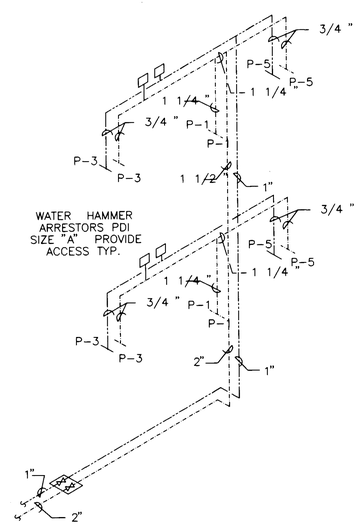

DOMESTIC WATER RISER (3 / M28 M29 | M31) (6 / M28 M29 | M31) (7 / M28 M29 | M31)

NO SCALE

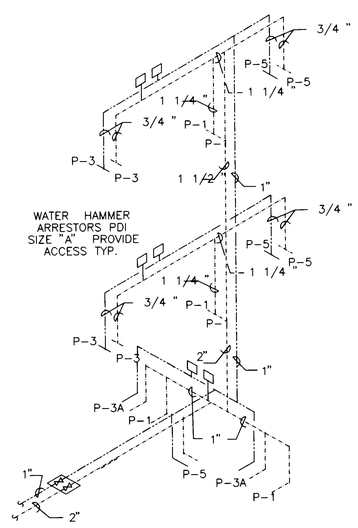

DOMESTIC WATER RISER (2 / M28 M29 | M31)

NO SCALE

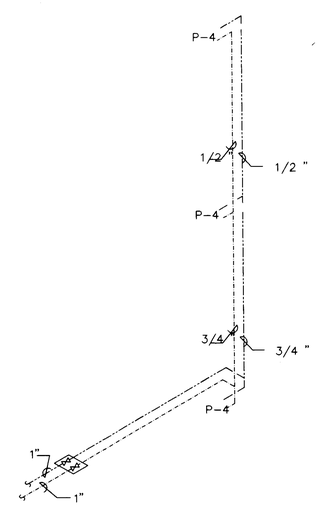

DOMESTIC WATER RISER (14 / M28 M29 | M31)

NO SCALE

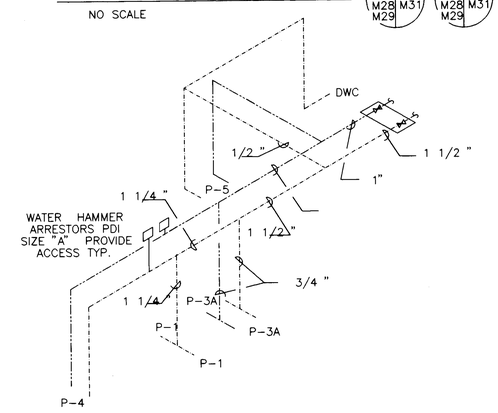

DOMESTIC WATER RISER (1 / M27 M31)

NO SCALE

SYM	D.O. NO.	ACTION	DATE	DESCRIPTION OF REVISION
			30APR96	REVISED AS-BUILT

ENGINEERING DIVISION
DESIGN BRANCH

U.S. ARMY ENGINEER DISTRICT, FORT WORTH
CORPS OF ENGINEERS
FORT WORTH, TEXAS

DESIGNED BY: C. GIBBONS
DRAWN BY: C. GIBBONS
REVIEWED BY: F. HENDERSON

FORT BLISS, TEXAS

ENLISTED BARRACKS W/O DINING FACILITIES II
FY 92 PN 0036097

COLD & HOT WATER RISERS
BUILDING 2447

SUBMITTED BY:

JACK D. OSBORNE, P.E.
CHIEF, MECHANICAL SECTION

SOL. NO. DACA63-94-B-0067 DATED: FEB 1994
CONTR. NO. DACA63-94-C-0120
DRAWING NUMBER FB-QE
SHEET NO. M-310F
SEQUENCE NO. 117

CADD FILE NAME: EB7PR147.DGN

"DRAWING OF WORK AS BUILT"

CONTR. NO. DACA63-94-C-0120

Mon Jul 8 10:41:35 1996

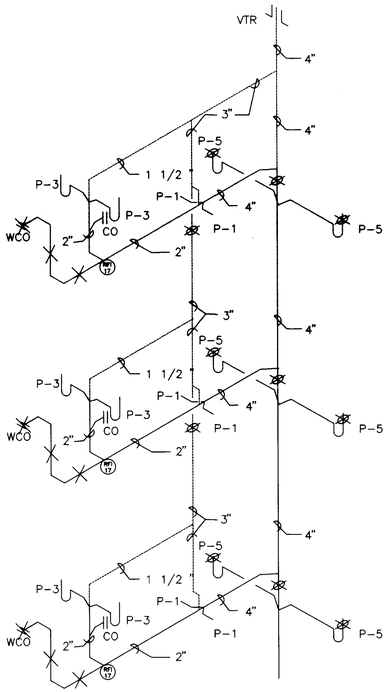

WASTE & VENT RISER
NO SCALE
8 M28 M29 M30 | 12 M28 M29 M30 | 15 M28 M29 M30

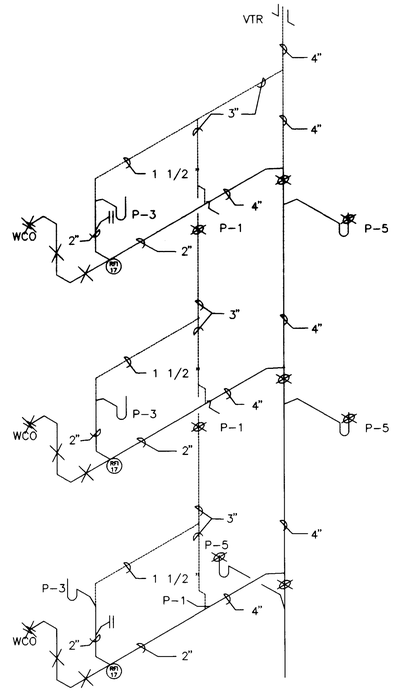

WASTE & VENT RISER
NO SCALE
11 M28 M29 M30

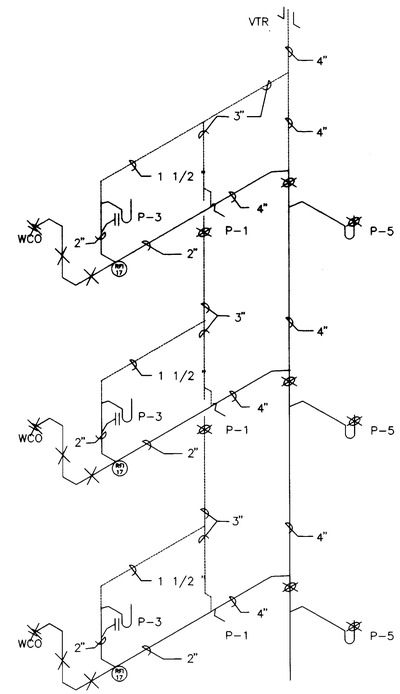

WASTE & VENT RISER
NO SCALE
10 M28 M29 M30 | 13 M28 M29 M30

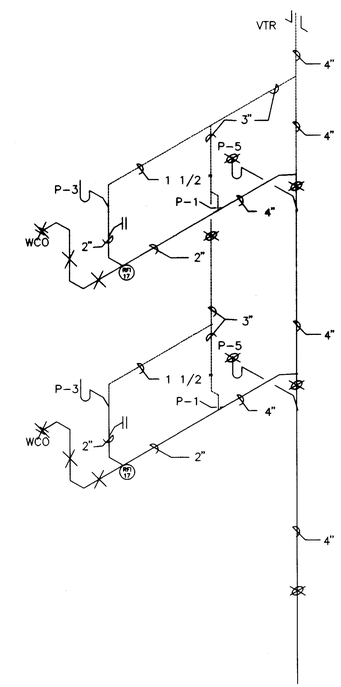

WASTE & VENT RISER
NO SCALE
4 M28 M29 M30 | 5 M28 M29 M30 | 9 M28 M29 M30

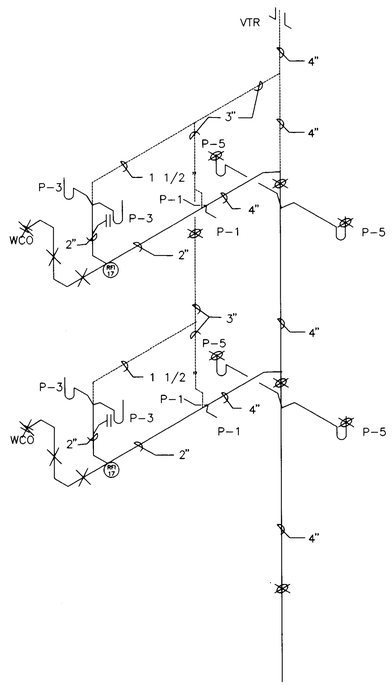

WASTE & VENT RISER
NO SCALE
3 M28 M29 M30 | 6 M28 M29 M30 | 7 M28 M29 M30

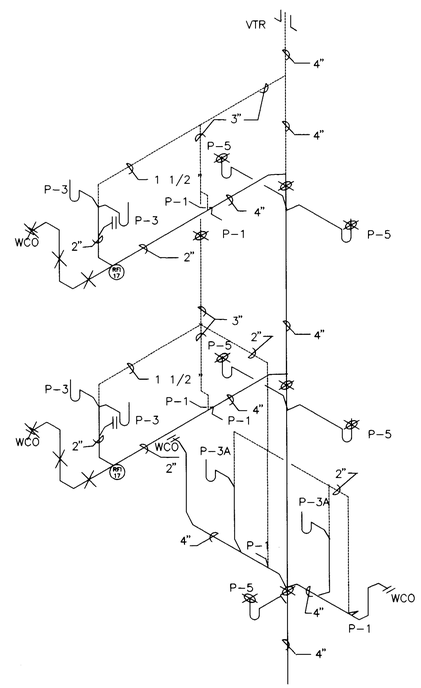

WASTE & VENT RISER
NO SCALE
2 M28 M29 M30

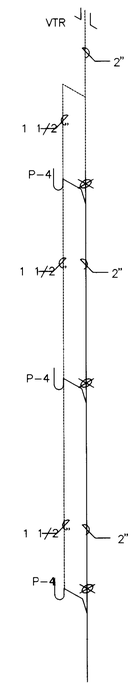

WASTE & VENT RISER
NO SCALE
14 M28 M29 M30

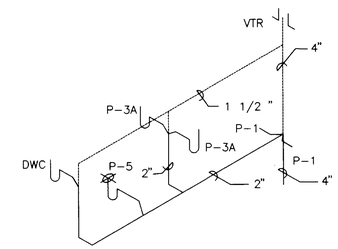

WASTE & VENT RISER
NO SCALE
1 M27 M30

SYM	D.O. NO.	ACTION	DATE	DESCRIPTION OF REVISION
			30APR96	REVISED AS-BUILT
RO 17			12SEP95	ACCEPTABLE TO MOVE CLEANOUTS UNDER LAVATORIES.

ENGINEERING DIVISION
DESIGN BRANCH

U.S. ARMY ENGINEER DISTRICT, FORT WORTH
CORPS OF ENGINEERS
FORT WORTH, TEXAS

DESIGNED BY: C. GIBBONS
DRAWN BY: C. GIBBONS
REVIEWED BY: F. HENDERSON

FORT BLISS, TEXAS

ENLISTED BARRACKS W/O DINING FACILITIES II
FY 92 PN 0036097

WASTE & VENT RISERS
BUILDING 2447

SUBMITTED BY:
JACK D. OSBORNE, P.E.
CHIEF, MECHANICAL SECTION

SOL. NO. DACA63-94-B-0067 DATED: FEB 1994
CONTR. NO. DACA63-94-C-0120
DRAWING NUMBER FB- QE
SHEET NO. M-300F
SEQUENCE NO. 116

CADD FILE NAME: EB7PR047.DGN

"DRAWING OF WORK AS BUILT"

CONTR. NO. DACA63-94-C-0120

Mon Jul 8 10:40:06 1996

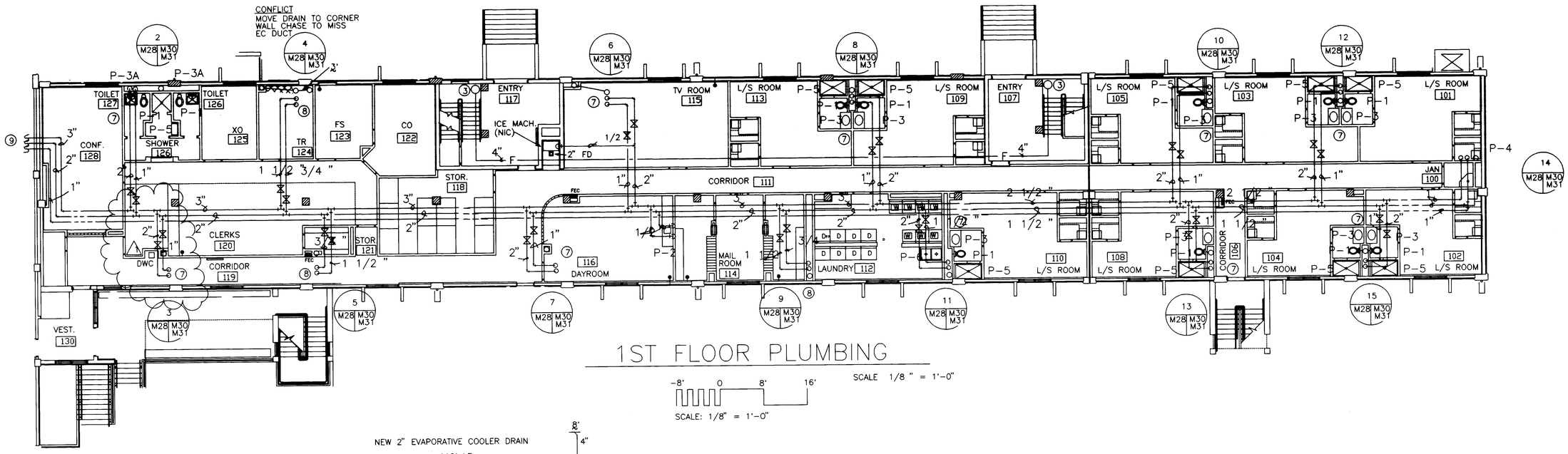

1ST FLOOR PLUMBING

SCALE 1/8 " = 1'-0"

-8' 0 8' 16'

SCALE: 1/8" = 1'-0"

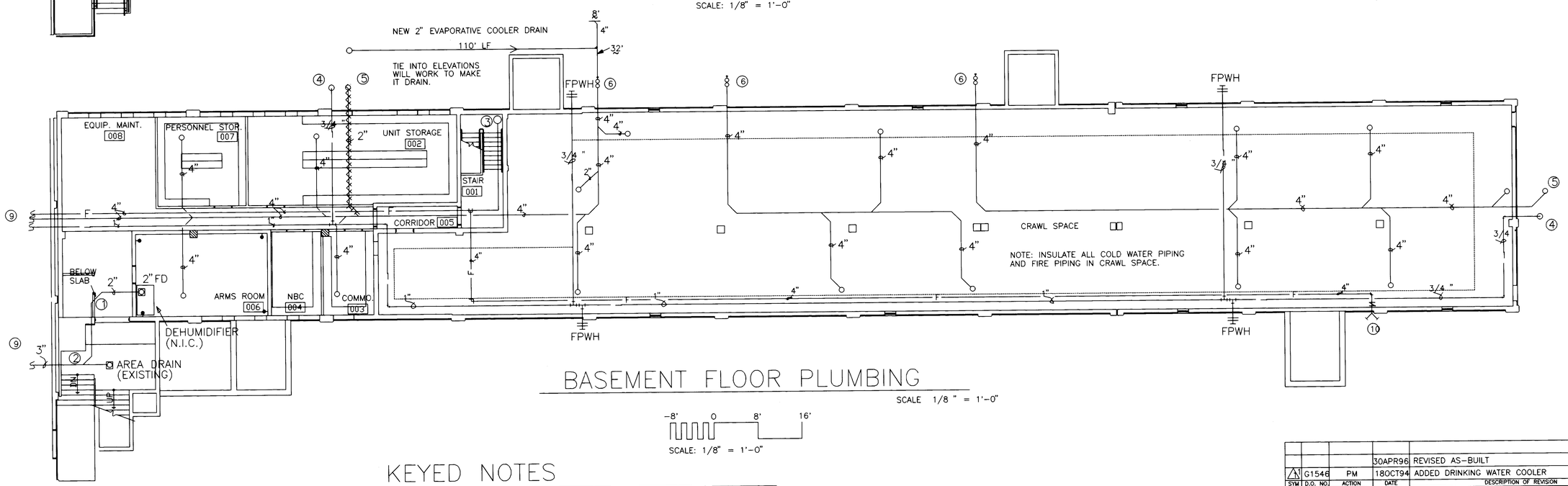

BASEMENT FLOOR PLUMBING

SCALE 1/8 " = 1'-0"

-8' 0 8' 16'

SCALE: 1/8" = 1'-0"

KEYED NOTES

1. SAW CUT EXISTING CONCRETE FLOOR AS REQUIRED FOR PIPING INSTALLATION. PATCH AND FINISH FLOORING TO MATCH EXISTING.
2. CLEAN EXISTING AREA DRAIN. ENSURE LINE FROM AREA DRAIN TO SUMP PUMP IS CLEAR.
3. 4" FIRE RISER WTH 2 1/2 " HOSE AND VALVE CONNECTION.
4. 3/4 " CW LINE TO EVAPORATIVE COOLER WITH DRAIN VALVE AND SHUT-OFF VALVE AT VALVE BOX.
5. 2" FLOOR DRAIN WITH NEW SANITARY SEWER LINE FROM EVAPORATIVE COOLER.
6. NEW DOUBLE CLEANOUT. CONNECT TO NEW LINE.
7. 2" CW AND 1" HW UP TO 2ND FLOOR.
8. 1 1/2 " CW AND 1" HW UP TO 2ND FLOOR.
9. SEE SHEET M-27 FOR CONTINUATION.
10. FIRE DEPARTMENT CONNECTION

NORTH

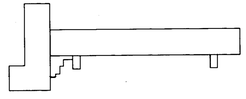

KEY PLAN: BLDG. 2447

SYM	D.O. NO.	ACTION	DATE	DESCRIPTION OF REVISION
			30APR96	REVISED AS-BUILT
1	G1546	PM	18OCT94	ADDED DRINKING WATER COOLER

ENGINEERING DIVISION
DESIGN BRANCH

U.S. ARMY ENGINEER DISTRICT, FORT WORTH
CORPS OF ENGINEERS
FORT WORTH, TEXAS

DESIGNED BY: C. GIBBONS
DRAWN BY: C. GIBBONS
REVIEWED BY: F. HENDERSON
SUBMITTED BY: JACK D. OSBORNE, P.E.
CHIEF, MECHANICAL SECTION

FORT BLISS, TEXAS

ENLISTED BARRACKS W/O DINING FACILITIES II
FY 92 PN 0036097

BASEMENT & 1ST FLOOR PLUMBING
BUILDING 2447

SOL. NO. DACA63-94-B-0067 DATED: FEB 1994
CONTR. NO. DACA63-94-C-0120
DRAWING NUMBER FB-QE
SHEET NO. M28.10F 76
SEQUENCE NO. 114

CADD FILE NAME: EB7PP047.546
SUPERCEDES SHEET M-28

"DRAWING OF WORK AS BUILT"

CONTR. NO. DACA63-94-C-0120

Mon Jul 8 10:28:43 1996

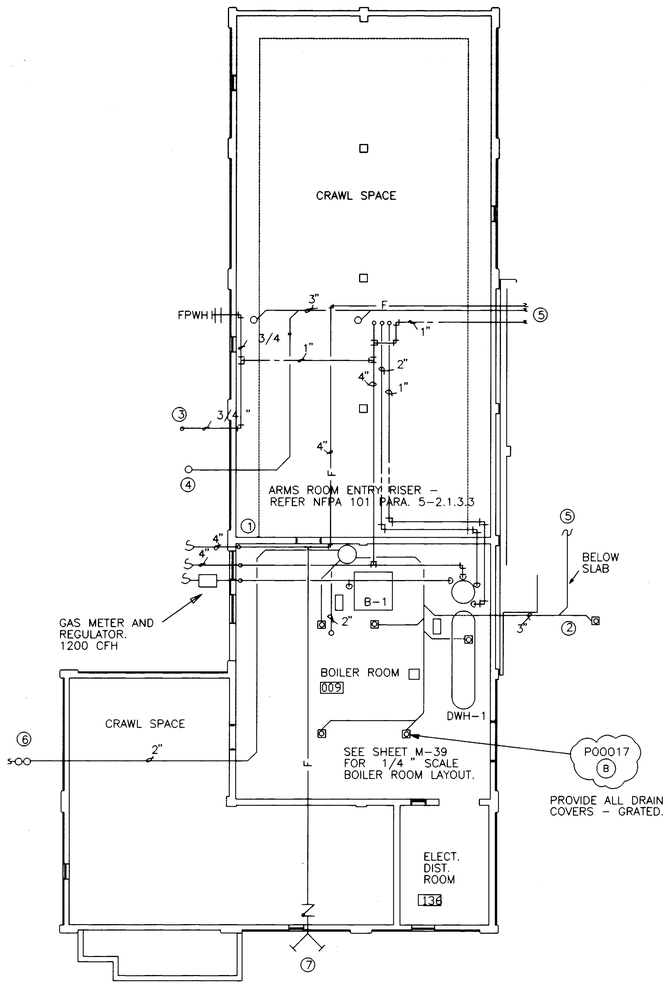

BASEMENT FLOOR PLUMBING

SCALE 1/8 " = 1'-0"

-8' 0 8' 16'

SCALE: 1/8" = 1'-0"

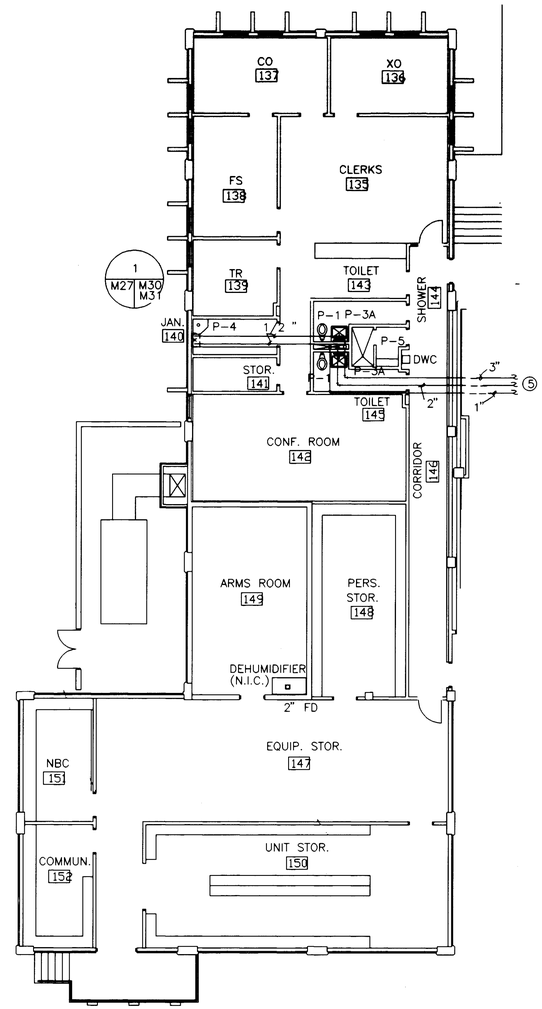

1ST FLOOR PLUMBING

SCALE 1/8 " = 1'-0"

-8' 0 8' 16'

SCALE: 1/8" = 1'-0"

KEYED NOTES

1. O. S. & Y. VALVE WITH SUPERVISORY SWITCH.
2. CLEAN EXISTING AREA DRAIN. ENSURE LINE FROM AREA DRAIN TO SUMP PUMP IS CLEAR.
3. 3/4 " CW LINE TO EVAPORATIVE COOLER WITH DRAIN VALVE AND SHUT-OFF VALVE AT VALVE BOX.
4. 2" FLOOR DRAIN WITH NEW SANITARY SEWER LINE FROM EVAPORATIVE COOLER.
5. SEE SHEET M-28 FOR CONTINUATION.
6. NEW DOUBLE CLEANOUT. CONNECT TO EXISTING LINE.
7. FIRE DEPARTMENT CONNECTION.

GENERAL NOTES

1. ALL PIPING BELOW CEILING EXCEPT WHERE NOTED.
2. ALL PIPING IS NEW EXCEPT WHERE SHOWN IN BOILER ROOM.
3. INSULATE ALL COLD WATER PIPING AND FIRE PIPING IN CRAWL SPACE.

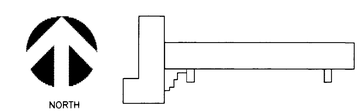

KEY PLAN: BLDG. 2447

SYM	D.O. NO.	ACTION	DATE	DESCRIPTION OF REVISION
			30APR96	REVISED AS-BUILT
	B	P00017	26SEP95	PROVIDE ALL DRAIN COVERS – GRATED.

ENGINEERING DIVISION
DESIGN BRANCH

U.S. ARMY ENGINEER DISTRICT, FORT WORTH
CORPS OF ENGINEERS
FORT WORTH, TEXAS

DESIGNED BY: C. GIBBONS
DRAWN BY: C. GIBBONS
REVIEWED BY: F. HENDERSON
SUBMITTED BY: JACK D. OSBORNE, P.E. CHIEF, MECHANICAL SECTION

FORT BLISS, TEXAS

ENLISTED BARRACKS W/O DINING FACILITIES II
FY 92 PN 0036097

BASEMENT & 1ST FLOOR PLUMBING
BUILDING 2447

SOL. NO. DACA63-94-B-0067 DATED: FEB 1994
CONTR. NO. DACA63-94-C-0120
DRAWING NUMBER: FB-QE
SHEET NO. M-27OF
SEQUENCE NO. 113
CADD FILE NAME: EB7PPH47.DGN

"DRAWING OF WORK AS BUILT"

CONTR. NO. DACA63-94-C-0120

Mon Jul 8 10:25:16 1996

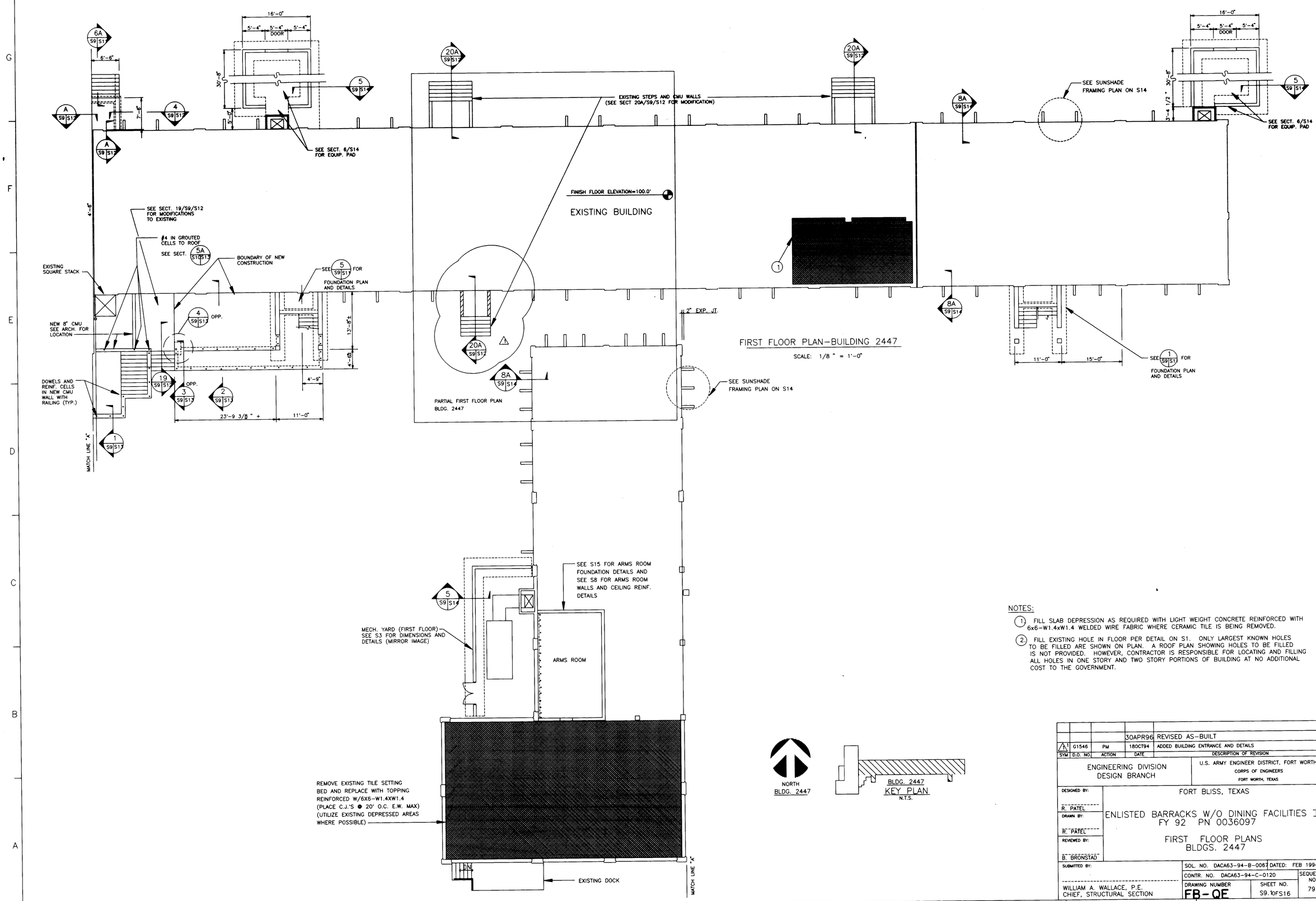

NOTES:

1. FILL SLAB DEPRESSION AS REQUIRED WITH LIGHT WEIGHT CONCRETE REINFORCED WITH 6x6-W1.4xW1.4 WELDED WIRE FABRIC WHERE CERAMIC TILE IS BEING REMOVED.
2. FILL EXISTING HOLE IN FLOOR PER DETAIL ON S1. ONLY LARGEST KNOWN HOLES TO BE FILLED ARE SHOWN ON PLAN. A ROOF PLAN SHOWING HOLES TO BE FILLED IS NOT PROVIDED. HOWEVER, CONTRACTOR IS RESPONSIBLE FOR LOCATING AND FILLING ALL HOLES IN ONE STORY AND TWO STORY PORTIONS OF BUILDING AT NO ADDITIONAL COST TO THE GOVERNMENT.

SYM	D.O. NO.	ACTION	DATE	DESCRIPTION OF REVISION
			30APR96	REVISED AS-BUILT
1	G1546	PM	18OCT94	ADDED BUILDING ENTRANCE AND DETAILS

ENGINEERING DIVISION
DESIGN BRANCH

U.S. ARMY ENGINEER DISTRICT, FORT WORTH
CORPS OF ENGINEERS
FORT WORTH, TEXAS

DESIGNED BY: R. PATEL
DRAWN BY: R. PATEL
REVIEWED BY: B. BRONSTAD
SUBMITTED BY: WILLIAM A. WALLACE, P.E.
CHIEF, STRUCTURAL SECTION

FORT BLISS, TEXAS

ENLISTED BARRACKS W/O DINING FACILITIES II
FY 92 PN 0036097

FIRST FLOOR PLANS
BLDGS. 2447

SOL. NO. DACA63-94-B-0067 DATED: FEB 1994
CONTR. NO. DACA63-94-C-0120
DRAWING NUMBER FB-QF
SHEET NO. S9.10FS16
SEQUENCE NO. 79
CONTR. NO. DACA63-94-C-0120

CADD FILE NAME: eb7ff147.dgn
SUPERSEDES SHEET S9

"DRAWING OF WORK AS BUILT"

Wed Jul 3 13:54:58 1996

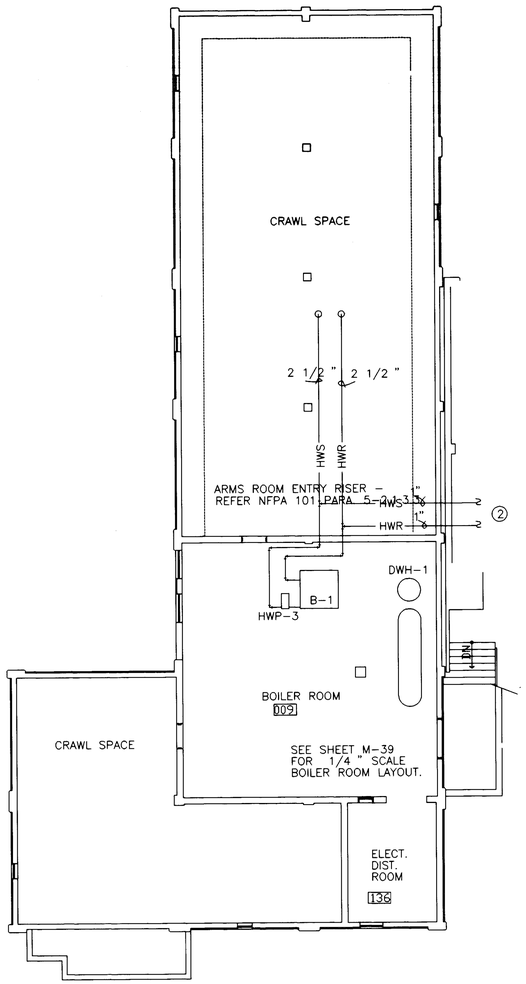

BASEMENT FLOOR HYDRONIC PIPING

SCALE 1/8 " = 1'-0"

-8' 0 8' 16'

SCALE: 1/8" = 1'-0"

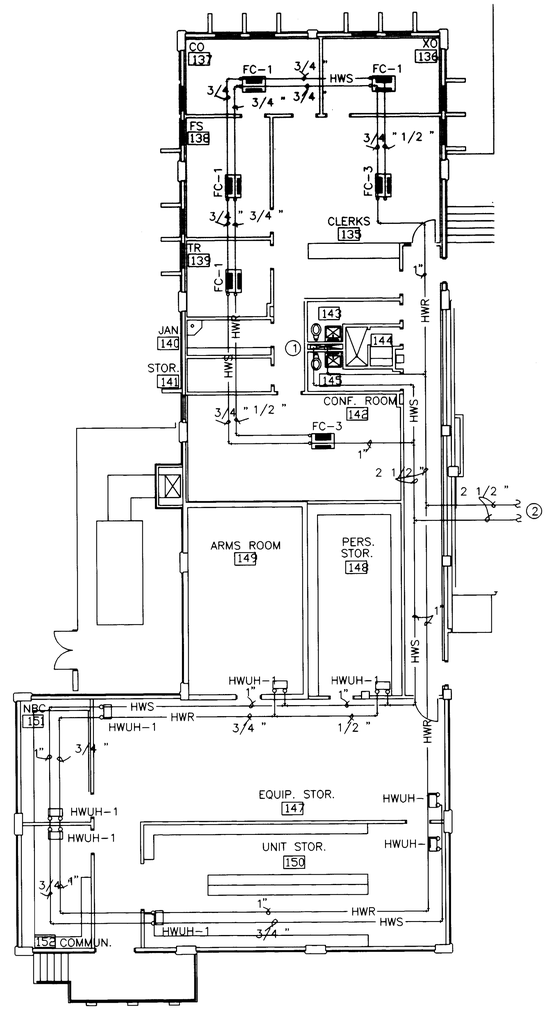

1ST FLOOR HYDRONIC PIPING

SCALE 1/8 " = 1'-0"

-8' 0 8' 16'

SCALE: 1/8" = 1'-0"

KEYED NOTES

① 2 1/2 " HWS AND HWR DOWN TO BASEMENT.

② SEE SHEET M-37 FOR CONTINUATION.

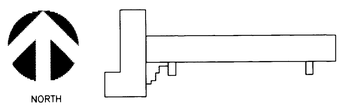

KEY PLAN: BLDG. 2447

SYM	D.O. NO.	ACTION	DATE	DESCRIPTION OF REVISION
			30APR96	REVISED AS-BUILT

ENGINEERING DIVISION
DESIGN BRANCH

U.S. ARMY ENGINEER DISTRICT, FORT WORTH
CORPS OF ENGINEERS
FORT WORTH, TEXAS

DESIGNED BY: C. GIBBONS
DRAWN BY: C. GIBBONS
REVIEWED BY: F. HENDERSON
SUBMITTED BY: JACK D. OSBORNE, P.E.
CHIEF, MECHANICAL SECTION

FORT BLISS, TEXAS

ENLISTED BARRACKS W/O DINING FACILITIES II
FY 92 PN 0036097

BASEMENT & 1ST FLOOR
HYDRONIC PIPING
BUILDING 2447

SOL. NO. DACA63-94-B-0067 DATED: FEB 1994
CONTR. NO. DACA63-94-C-0120
DRAWING NUMBER FB-QE
SHEET NO. M-360F
SEQUENCE NO. 122
CADD FILE NAME: EB7HH147.DGN

"DRAWING OF WORK AS BUILT"

CONTR. NO. DACA63-94-C-0120

Mon Jul 8 10:52:31 1996

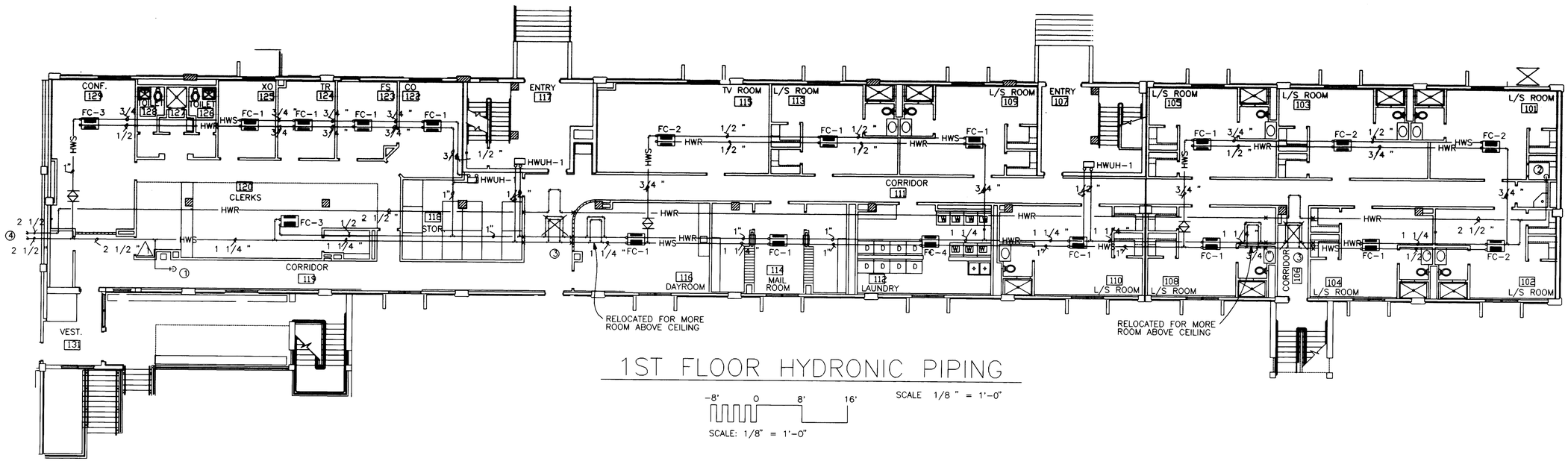

1ST FLOOR HYDRONIC PIPING

SCALE 1/8 " = 1'-0"

-8' 0 8' 16'

SCALE: 1/8" = 1'-0"

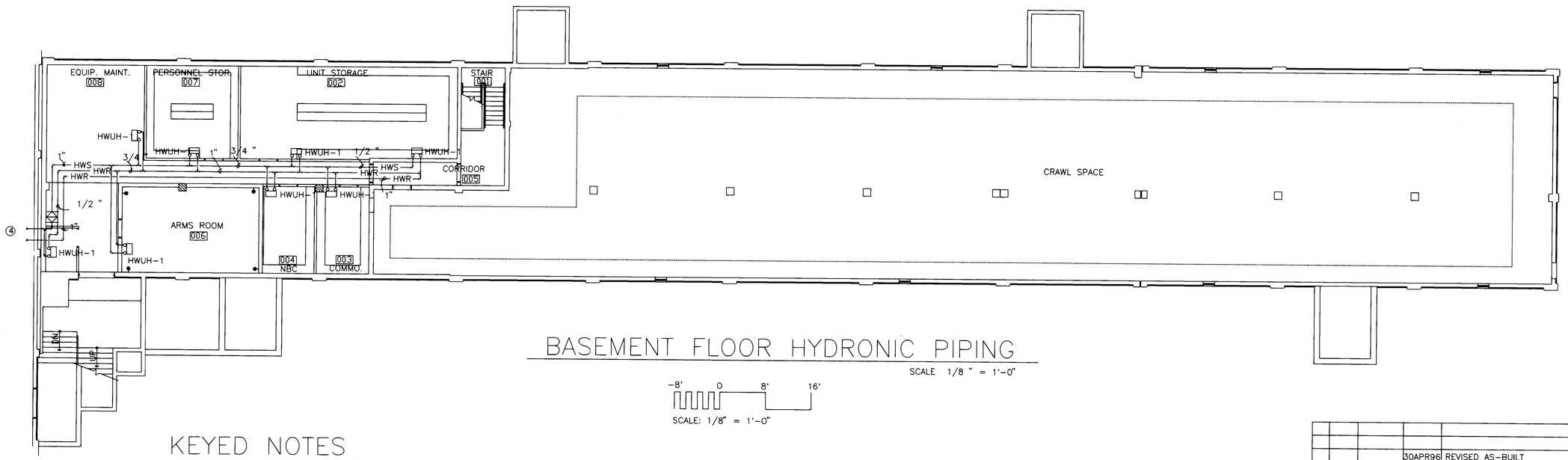

BASEMENT FLOOR HYDRONIC PIPING

SCALE 1/8 " = 1'-0"

-8' 0 8' 16'

SCALE: 1/8" = 1'-0"

KEYED NOTES

1. 2" HWS UP TO 2ND FLOOR.
2. 2" HWR FROM 2ND FLOOR.
3. 4' LONG BY 2' WIDE EXPANSION LOOPS.
4. SEE SHEET M-36 FOR CONTINUATION.

NORTH

KEY PLAN: BLDG. 2447

SYM	D.O. NO.	ACTION	DATE	DESCRIPTION OF REVISION
			30APR96	REVISED AS-BUILT

ENGINEERING DIVISION
DESIGN BRANCH

U.S. ARMY ENGINEER DISTRICT, FORT WORTH
CORPS OF ENGINEERS
FORT WORTH, TEXAS

DESIGNED BY: C. GIBBONS
DRAWN BY: C. GIBBONS
REVIEWED BY: F. HENDERSON
SUBMITTED BY: JACK D. OSBORNE, P.E. CHIEF, MECHANICAL SECTION

FORT BLISS, TEXAS

ENLISTED BARRACKS W/O DINING FACILITIES II
FY 92 PN 0036097

BASEMENT & 1ST FLOOR
HYDRONIC PIPING
BUILDING 2447

SOL. NO. DACA63-94-B-0067 DATED: FEB 1994
CONTR. NO. DACA63-94-C-0120
DRAWING NUMBER FB-QE
SHEET NO. M-37OF
SEQUENCE NO. 123
CADD FILE NAME: EB7H247.DGN

"DRAWING OF WORK AS BUILT"

CONTR. NO. DACA63-94-C-0120

Mon Jul 8 10:54:06 1996

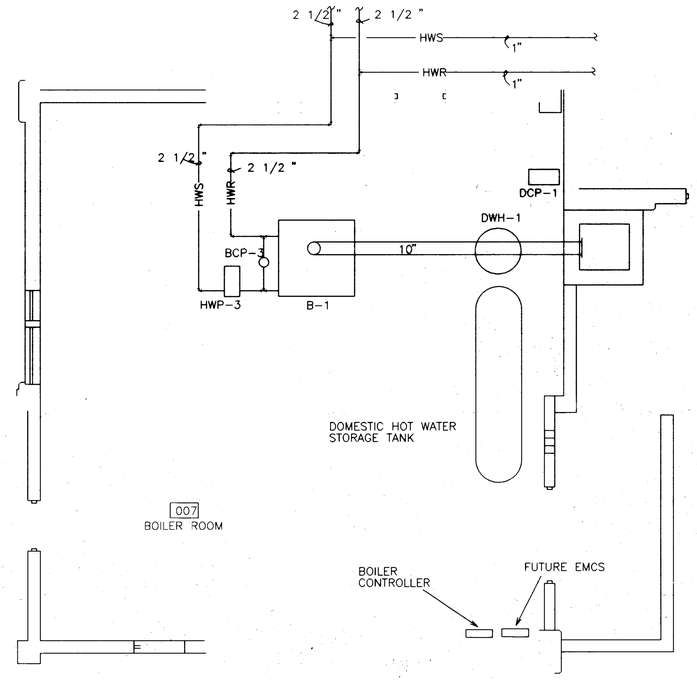

BOILER ROOM LAYOUT – HVAC

SCALE 1/4 " = 1'-0"

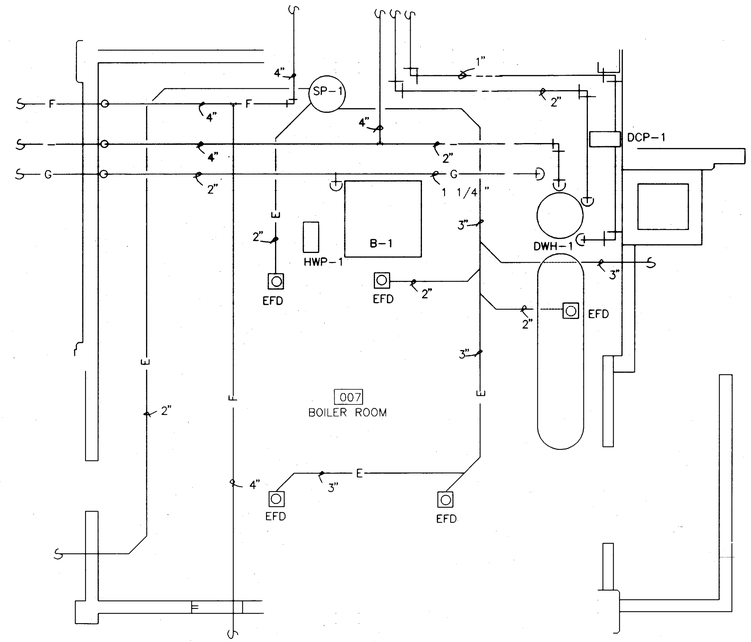

BOILER ROOM LAYOUT – PLUMBING

SCALE 1/4 " = 1'-0"

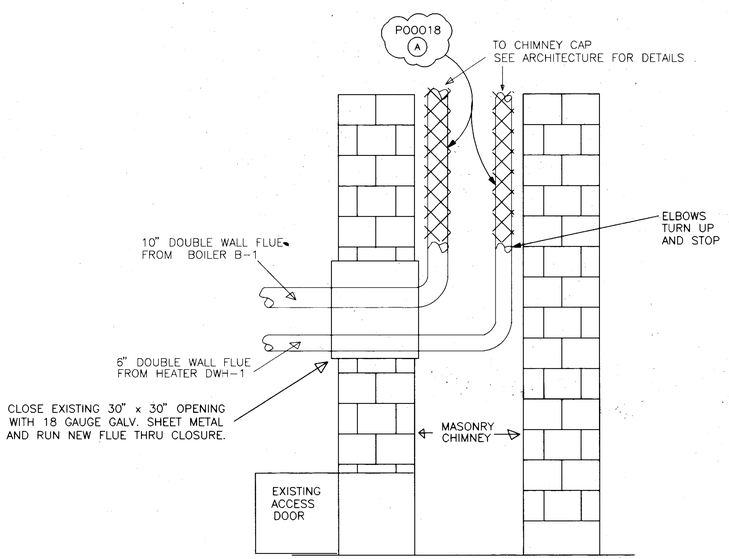

CHIMNEY DETAIL

NO SCALE

SYM	D.O. NO.	ACTION	DATE	DESCRIPTION OF REVISION
			30APR96	REVISED AS-BUILT
A		P00018	19DEC95	DELETE VERTICAL FLUE INSTALLATION

ENGINEERING DIVISION
DESIGN BRANCH

U.S. ARMY ENGINEER DISTRICT, FORT WORTH
CORPS OF ENGINEERS
FORT WORTH, TEXAS

DESIGNED BY: C. GIBBONS
DRAWN BY: C. GIBBONS
REVIEWED BY: F. HENDERSON
SUBMITTED BY: JACK D. OSBORNE, P.E.
CHIEF, MECHANICAL SECTION

FORT BLISS, TEXAS

ENLISTED BARRACKS W/O DINING FACILITIES II
FY 92 PN 0036097

BOILER ROOM DETAILS
BUILDING 2447

SOL. NO. DACA63-94-B-0067 DATED: FEB 1994
CONTR. NO. DACA63-94-C-0120
DRAWING NUMBER FB-QE
SHEET NO. M-390F
SEQUENCE NO. 125
CONTR. NO. DACA63-94-C-0120
CADD FILE NAME: EB7H447.DGN

"DRAWING OF WORK AS BUILT"

Fri Nov 15 10:59:15 1996

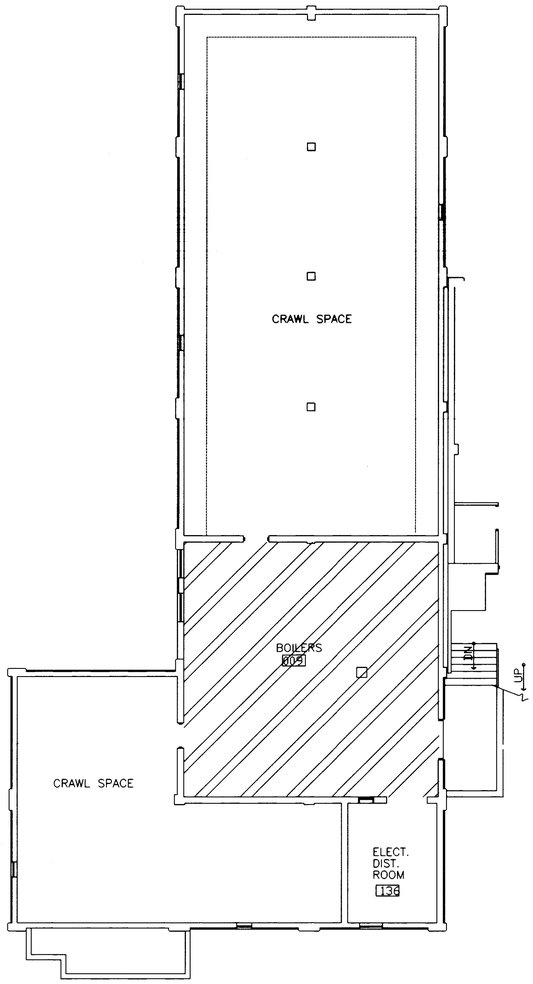

BASEMENT FIRE PROTECTION PLAN

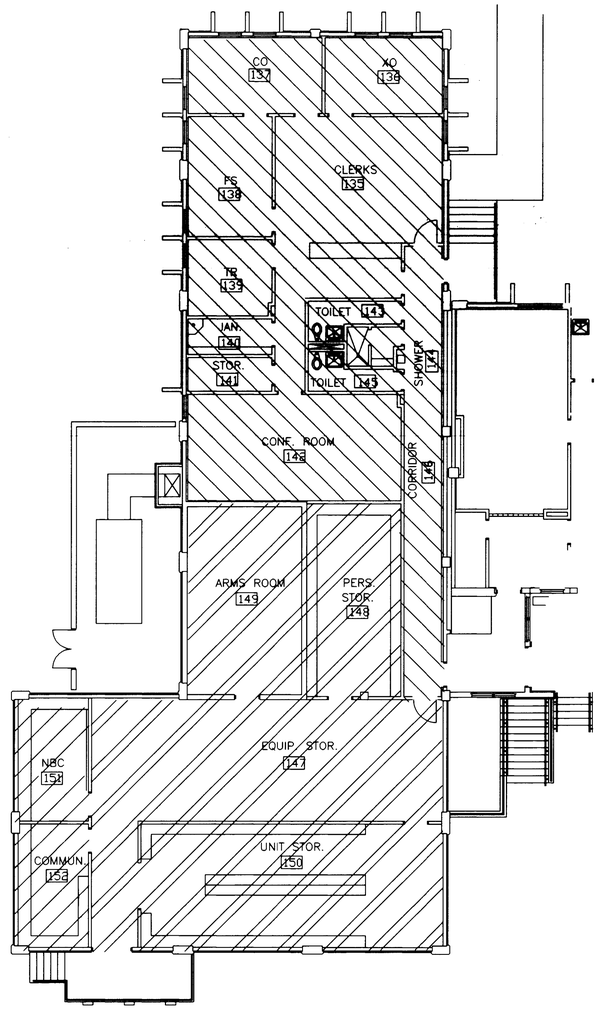

1ST FLOOR FIRE PROTECTION PLAN

-8' 0 8' 16'

SCALE: 1/8" = 1'-0"

-8' 0 8' 16'

SCALE: 1/8" = 1'-0"

NORTH

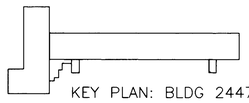

KEY PLAN: BLDG 2447

KEYED NOTES:

- HYDRAULICALLY DESIGN IN ACCORDANCE WITH NFPA 13R WITH A DEMAND EQUAL TO 13 gpm FOR EACH OF THE 4 MOST HYDRAULICALLY REMOTE HEADS.
- HYDRAULICALLY DESIGN IN ACCORDANCE WITH NFPA 13 FOR A LIGHT HAZARD ZONE.
- HYDRAULICALLY DESIGN IN ACCORDANCE WITH NFPA 13 FOR AN ORDINARY HAZARD GROUP 1 ZONE.
- HYDRAULICALLY DESIGN IN ACCORDANCE WITH NFPA 13 FOR AN ORDINARY HAZARD GROUP 2 ZONE.

GENERAL NOTES:

1. ALL AREAS ARE TO BE PROTECTED BY A WET PIPE SPRINKLER SYSTEM DESIGNED IN ACCORDANCE WITH NFPA 13 OR NFPA13R AS INDICATED.
2. CONTRACTOR WILL PROVIDE HYDRAULIC CALCULATIONS FOR ALL PROTECTED AREAS.
3. SEE ENLARGED BOILER ROOM PIPING LAYOUT FOR RISER LOCATION.
4. WATER PRESSURE DATA:

   STATIC 50 PSIG
   RESIDUAL 38 PSIG AT 2,908 GPM

SYM	D.O. NO.	ACTION	DATE	DESCRIPTION OF REVISION
			30APR96	REVISED AS-BUILT

ENGINEERING DIVISION
DESIGN BRANCH

U.S. ARMY ENGINEER DISTRICT, FORT WORTH
CORPS OF ENGINEERS
FORT WORTH, TEXAS

DESIGNED BY: C. GIBBONS
DRAWN BY: C. GIBBONS
REVIEWED BY: F. HENDERSON
SUBMITTED BY: JACK D. OSBORNE, P.E.
CHIEF, MECHANICAL SECTION

FORT BLISS, TEXAS

ENLISTED BARRACKS W/O DINING FACILITIES II
FY 92 PN 0036097

BUILDING 2447
FIRE PROTECTION PLAN
BASEMENT & 1ST FLOR

SOL. NO. DACA63-94-B-0067 DATED: FEB 1994
CONTR. NO. DACA63-94-C-0120
DRAWING NUMBER FB-QE
SHEET NO. M-7 10F 76
SEQUENCE NO. 157
CADD FILE NAME: EB7FI047.DGN

"DRAWING OF WORK AS BUILT"

CONTR. NO. DACA63-94-C-0120

Tue Jul 9 10:49:03 1996

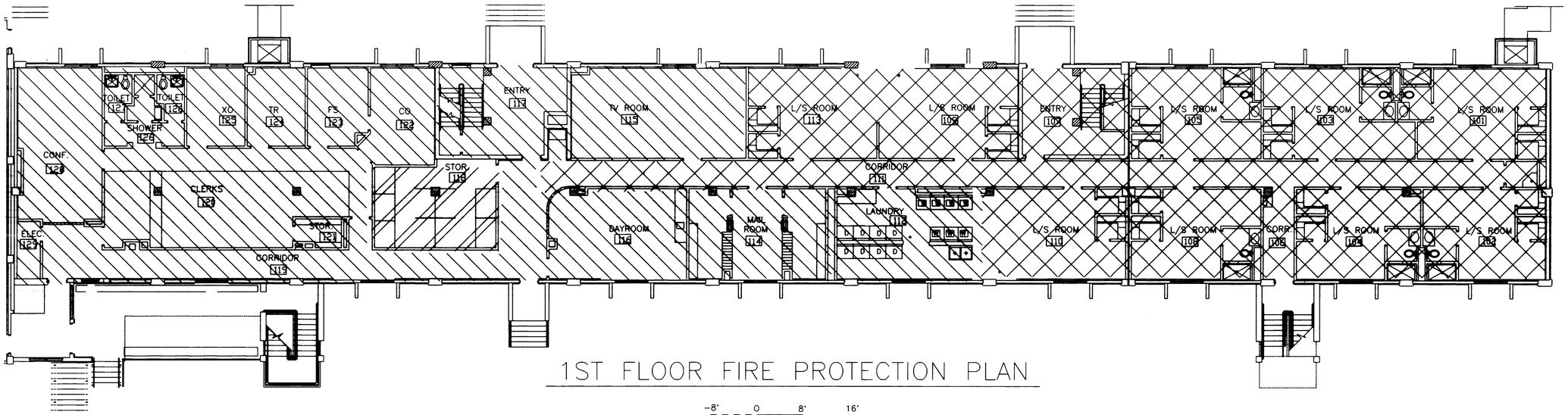

1ST FLOOR FIRE PROTECTION PLAN

-8' 0 8' 16'

SCALE: 1/8" = 1'-0"

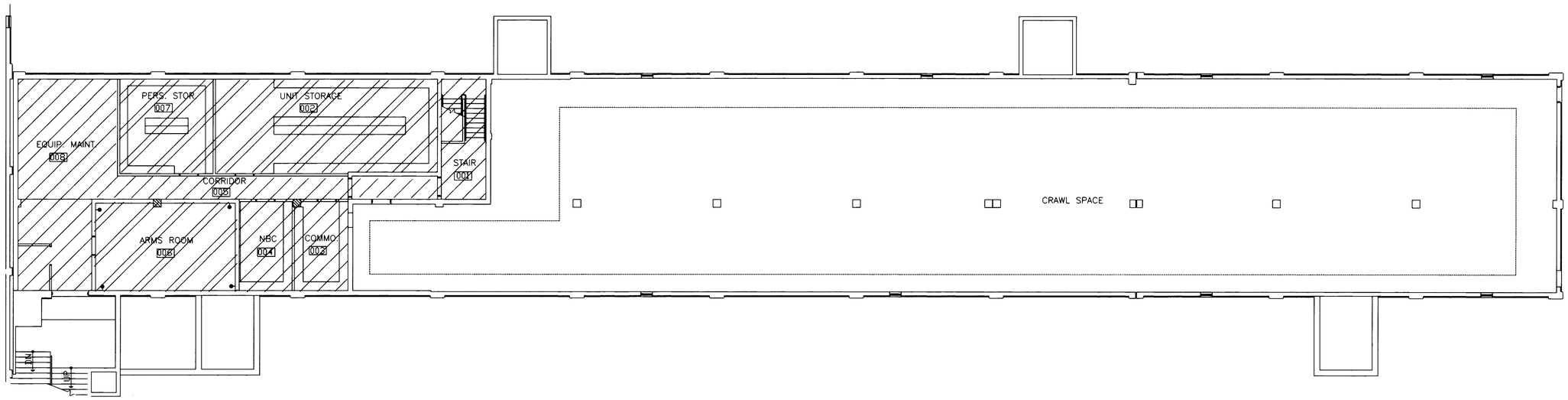

BASEMENT FIRE PROTECTION PLAN

-8' 0 8' 16'

SCALE: 1/8" = 1'-0"

NORTH

KEY PLAN: BLDG 2447

KEYED NOTES:

- HYDRAULICALLY DESIGN IN ACCORDANCE WITH NFPA 13R WITH A DEMAND EQUAL TO 13 gpm FOR EACH OF THE 4 MOST HYDRAULICALLY REMOTE HEADS.
- HYDRAULICALLY DESIGN IN ACCORDANCE WITH NFPA 13 FOR A LIGHT HAZARD ZONE.
- HYDRAULICALLY DESIGN IN ACCORDANCE WITH NFPA 13 FOR AN ORDINARY HAZARD GROUP 1 ZONE.
- HYDRAULICALLY DESIGN IN ACCORDANCE WITH NFPA 13 FOR AN ORDINARY HAZARD GROUP 2 ZONE.

GENERAL NOTES:

1. ALL AREAS ARE TO BE PROTECTED BY A WET PIPE SPRINKLER SYSTEM DESIGNED IN ACCORDANCE WITH NFPA 13 OR NFPA13R AS INDICATED.
2. CONTRACTOR WILL PROVIDE HYDRAULIC CALCULATIONS FOR ALL PROTECTED AREAS.
3. SEE ENLARGED BOILER ROOM PIPING LAYOUT FOR RISER LOCATION.
4. WATER PRESSURE DATA:

   STATIC 50 PSIG
   RESIDUAL 38 PSIG AT 2,908 GPM

SYM	D.O. NO.	ACTION	DATE	DESCRIPTION OF REVISION
			30APR96	REVISED AS-BUILT

ENGINEERING DIVISION
DESIGN BRANCH

U.S. ARMY ENGINEER DISTRICT, FORT WORTH
CORPS OF ENGINEERS
FORT WORTH, TEXAS

DESIGNED BY: C. GIBBONS
DRAWN BY: C. GIBBONS
REVIEWED BY: F. HENDERSON

FORT BLISS, TEXAS

ENLISTED BARRACKS W/O DINING FACILITIES II
FY 92 PN 0036097
BUILDING 2447
FIRE PROTECTION PLAN
BASEMENT & 1ST FLOOR

SUBMITTED BY:
JACK D. OSBORNE, P.E.
CHIEF, MECHANICAL SECTION

SOL. NO. DACA63-94-B-0067 DATED: FEB 1994
CONTR. NO. DACA63-94-C-0120
DRAWING NUMBER FB-QE
SHEET NO. M-72 OF 76
SEQUENCE NO. 158

CADD FILE NAME: EB7F1147.DGN

"DRAWING OF WORK AS BUILT"

CONTR. NO. DACA63-94-C-0120

Tue Jul 9 10:50:11 1996