REVISIONS				
ZONE	LTR	DESCRIPTION	DATE	APPROVED
	A	INCORPORATED LEC17	5-30-87	LPC34 5-31-87
	B	ADDED PR2. ADDED RV DESIGNATION TO LEGEND ADDED NOTE 3.	6-9-87	LPC37 6-9-87
	C	REVISED NOTES 1 AND 2.	6-22-87	LPC40 6-22-87

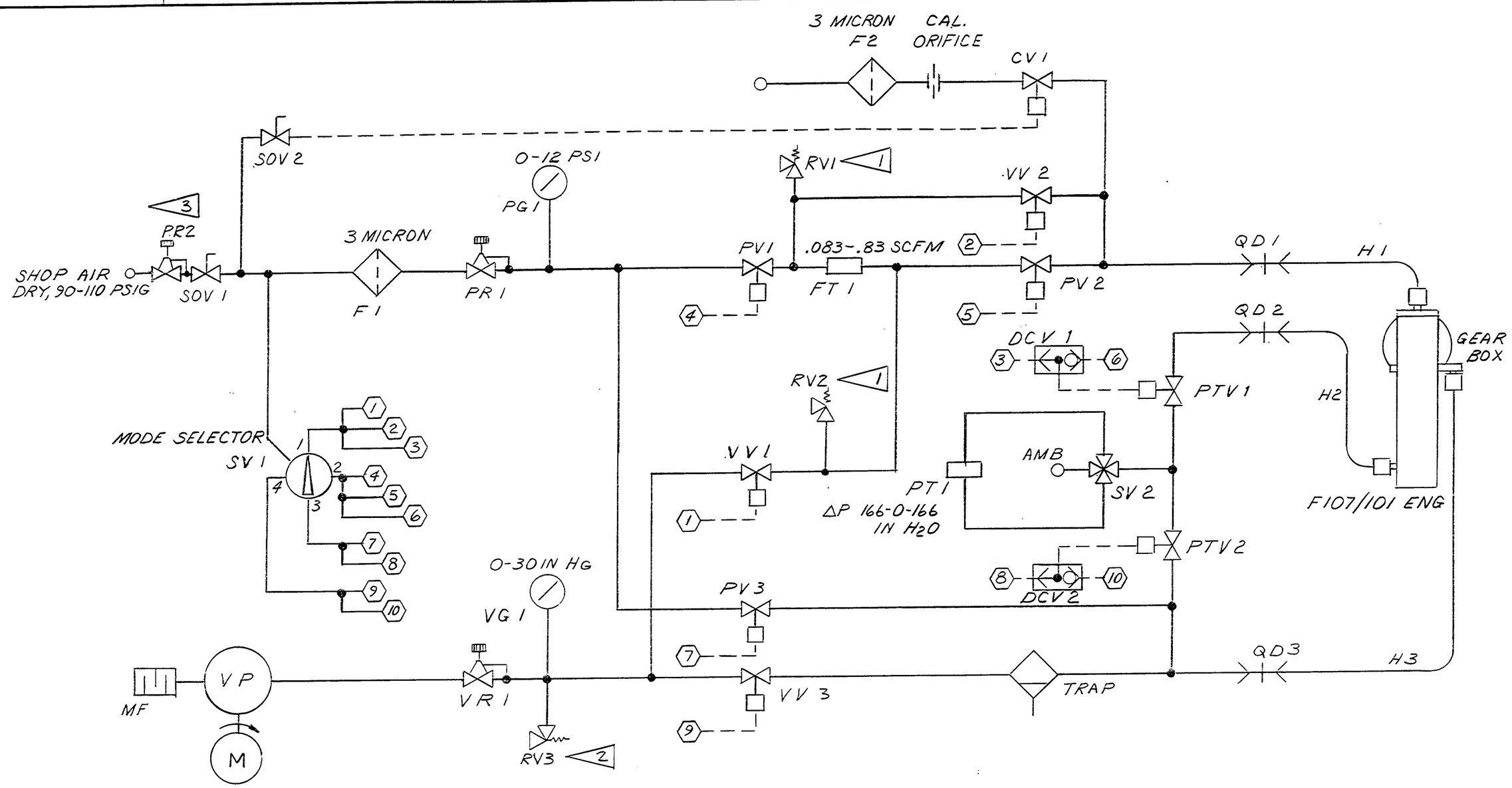

— KEY —		
		DESCRIPTION
SOV	-1,-2	SHUT-OFF VALVE
PR	-1,-2	PRESSURE REGULATOR
VR	-1	VACUUM REGULATOR
PG	-1	PRESSURE GAGE
VG	-1	VACUUM GAGE
SV	-1,-2	SELECTOR VALVE
VP		VACUUM PUMP
M		MOTOR
PV	-1,-2,-3	PRESSURE VALVE
VV	-1,-2,-3	VACUUM VALVE
FT	-1	FLOW TRANSDUCER
PT	-1	PRESSURE TRANSDUCER
CV	-1	CALIBRATION VALVE
PTV	-1,-2	PRESSURE TRANSDUCER VALVE
QD	-1,-2,-3	QUICK DISCONNECT
H	-1,-2,-3	HOSES
DCV	-1,-2	DUAL CHECK VALVE
MF		MUFFLER
F	-1,-2	FILTER
RV	-1,-2,-3	RELIEF VALVE

MODES

1. VACUUM FLOW/VACUUM CALIBRATION
2. PRESSURE FLOW/PRESSURE CAL.
3. GEAR BOX PRESSURE TEST
4. GEAR BOX VACUUM PURGE

NOTES -

1. SET RV1 & RV2 TO RESET BETWEEN 0.8 & 1.5 PSI AND BYPASS ALL FLOW AT 2 PSI ±.1 OR LESS.
2. SET RV3 TO ALLOW A PRESSURE NO GREATER THAN 6 PSI.
3. SET PR2 AT 50 ±2 PSIG.

N00032-85-C-5770

DESIGN ACTIVITY / CONTRACTOR
WILLIAMS INTERNATIONAL
2280 WEST MAPLE RD.
WALLED LAKE, MI. 48088
FSCM-24235
HSD CONTROL

UNLESS OTHERWISE SPECIFIED, CONTROL SHALL BE IN ACCORDANCE WITH ◊ CLASSIFICATION. ADDITIONAL CONTROL SPECIFIED SYMBOLS PER GSS 33

INSPECT - TEST DESIGNATED AREA(S) PER

DES	SPECIFICATION(S)
A	
B	

ALL AREAS

MATERIAL ~
HARDNESS
HEAT TREAT SPEC
SURFACE COATING
MFG SPEC
MAKE FROM
PROD. CODE

UNLESS OTHERWISE SPECIFIED:
DIMENSIONS ± ~ ANGLES ± ~. EXCEPT FOR DRILL END FORMS, FILLET RADII ~ TO ~. SURFACES HAVING A COMMON AXIS CONCENTRIC WITHIN ~ TIR ~. BREAK EDGES .025 MAX. GENERAL SURFACE ROUGHNESS ~ AA-THREADS 63 AA-DRILLED HOLES 250 AA-FLAWS ~ TIMES THE ROUGHNESS SPECIFIED FOR THE SURFACE NOT EXCEEDING ~ % PER SQ. IN.
△ MARK PART IDENTIFICATION: PER HS333. DRAWING INTERPRETATION PER DOD-STD-100 CLEANING, PRESERVATION AND HANDLING PER HS1550-C ~ P ~ THD PER HS3801 SURFACE CHARACTERISTICS PER USAS B46.1

DRAWN	H SMITH	3/23/87
CHECKED		
DESIGN		4/10/87
DFTG	COST	
MAT'L	FCTY	
PROJ	D/ACT	
QUAL	CUST	

CONTRACT NUMBER N00032-85-C-5770

EXP MFG	PRE PROD.	PROD.
4-30-87		6-01-87

NEXT ASSY	USED ON
AD 36349	AD 36349
APPLICATION	

UNITED TECHNOLOGIES HAMILTON STANDARD
4401 Donald Douglas Drive
Long Beach, California 90808

FLUID SCHEMATIC
DESICCANT LEAK CHECK
TL 2373

SIZE	CODE IDENT NO.	
D	73030	AD 36394

SCALE: ~ WEIGHT: ~ LB SHEET 1 OF 1

AD 36394 C