APPENDIX D

REFERENCE DRAWINGS

ELECTRICAL EQUIPMENT LEGEND

POWER DISTRIBUTION

XX — UTILITY MANHOLE- WHERE XX INDICATES MANHOLE NUMBER

P — UTILITY POLE- WHERE ## INDICATES POLE NUMBER

FT-# — FUSE TERMINAL- WHERE '#' INDICATED FUSE TERMINAL NUMBER (NOTE: REFER TO DATA SHEETS FOR FUSE TERMINAL CHARACTERISTICS, CONFIGURATIONS, ETC.)

PAD-MOUNTED TRANSFORMER (ONLY ONE LEG SHOWN FOR NON-LOOP STYLE UNITS)

— BUILDING (WHERE ## INDICATED BUILDING NUMBER)

POLE-MOUNTED TRANSFORMER

POLE-MOUNTED FUSE CUTOUT

PANELBOARD (REFER TO DATA SHEETS FOR PANELBOARD CHARACTERISTICS, CONFIGURATIONS, CIRCUIT BREAKERS, ETC.)

XX, SW1, SW2, SW3, SW4 — VACUUM SWITCH (NUMBER OF SWITCHES, SWITCH CONFIGURATION, ETC. VARY)

IF XX= NC - THE SWITCH IS NORMALLY CLOSED
IF XX= NO - THE SWITCH IS NORMALLY OPEN

M — ELECTRIC METER

CT — CURRENT TRANSFORMER

JUNCTION- (SPLICE POINT, CONFIGURATIONS AND QUANTITY OF JUNCTIONS MAY VARY- MAY BE LOCATED IN MANHOLES, SWITCHES, ETC.)

FUSED DISCONNECT SWITCH

(#) L-G
X KV CLASS
Y KV MCOV
SA'S

ELBOW STYLE SURGE/LIGHTNING ARRESTERS- (WHERE # DEFINES THE NUMBER OF ARRESTERS LINE TO GROUND. X DEFINES THE KV CLASS. Y DEFINES THE MAXIMUM CONTINUOUS OPERATING VOLTAGE. SA STANDS FOR SURGE ARRESTERS.)

CIRCUITING LEGEND

ALL CONDUCTORS, POWER EQUIPMENT, ETC. SHOWN IN RED ARE POWERED FROM SUBSTATION 1 CIRCUIT 1.

ALL CONDUCTORS, POWER EQUIPMENT, ETC. SHOWN IN BLUE ARE POWERED FROM SUBSTATION 1 CIRCUIT 4.

ALL CONDUCTORS, POWER EQUIPMENT, ETC. SHOWN IN GREEN ARE POWERED FROM SUBSTATION 2 CIRCUIT B2.

SOLID LINETYPE DENOTES PRIMARY CIRCUIT (MEDIUM VOLTAGE).

DASHED LINETYPE DENOTES SECONDARY CIRCUIT (LOW VOLTAGE).

NOTE: IF ANY ASSETS ARE SHOWN TO CONTAIN MULTIPLE CIRCUITS, THEN THEY WILL BE SHOWN AS THE COLOR OF THE CIRCUIT TO WHICH THEY ARE PRESUMED TO BE PRIMARILY CONFIGURED.

ELECTRIC LINES SCHEDULE

XX — ELECTRIC LINE TAG

XX LEGEND:

- 2= #2AWG
- 600= #600AWG
- 500= #500AWG
- 400= #400AWG
- 300= #350AWG
- 266= 266 MCM
- 250= #250AWG
- 1/0= #1/0 AWG
- 2/0= #2/0AWG
- 3/0= #3/0AWG
- 4/0= #4/0AWG
- 6= #6AWG
- 3= #3AWG
- 12= #12AWG

IF # = U - LINE IS UNDERGROUND
IF # = OH - LINE IS OVERHEAD
IF #= TP - LINE IS SECONDARY OVERHEAD ELECTRIC (TRIPLEX)

(TYP.) AFTER AN ELECTRIC LINE TAG DENOTES THAT OTHER ASSETS WITHIN THE AREA ARE ALL FED VIA THE SAME CONDUCTOR SIZE. IN THIS CASE, ALL ELECTRIC LINE SIZES MAY NOT BE SHOWN.

NOTE: ALL ELECTRIC LINES/CONDUCTORS SHOULD ASSUMED TO BE 3 PHASE FEEDS, UNLESS OTHERWISE NOTED.

SHEET KEY NOTES

1. FUSES ARE RTE ELX TYPE. A PHASE, AND B PHASE FUSES ARE 18 AMPS. PHASE C FUSE IS 25. PHASE C FUSE FEEDS TR 2094 & TR2094-1
2. FEED SHOWN IS SINGLE PHASE. (2) CABLES (H-N, 7620V) ARE BEING RUN BETWEEN ASSETS.
3. ONLY C PHASE FUSE IS IN USE.
4. SWITCH IS EQUIPPED WITH KIRK KEY INTERLOCK.
5. POLES AA1 & AA2 HAVE SECONDARY TRIPLEX RUNNING BENEATH THE MEDIUM VOLTAGE CIRCUIT.
6. FEED CONTAINS (2) #4/0 (EACH FROM C PHASE) AND (1) #4/0 NEUTRAL CONDUCTOR.
7. SECONDARY FEED IS SINGLE PHASE (CONTAINS (2) HOTS + NEUTRAL).

JADE STONE ENGINEERING

REVISION	DATE
100% FINAL	9/10/21

JSE JOB NO. 237-20
DATE: 09/10/2021
DRAWN BY: SAG
CHECKED BY: BCW
SCALE: AS NOTED

FORT DRUM
ELECTRICAL SINGLE LINE SURVEY
PID 20013
CONTRACT W911S20F6076

ELECTRICAL LEGENDS & NOTES

JSE SHEET NO.
E-0

P.01 9/14/2021 10:39 AM

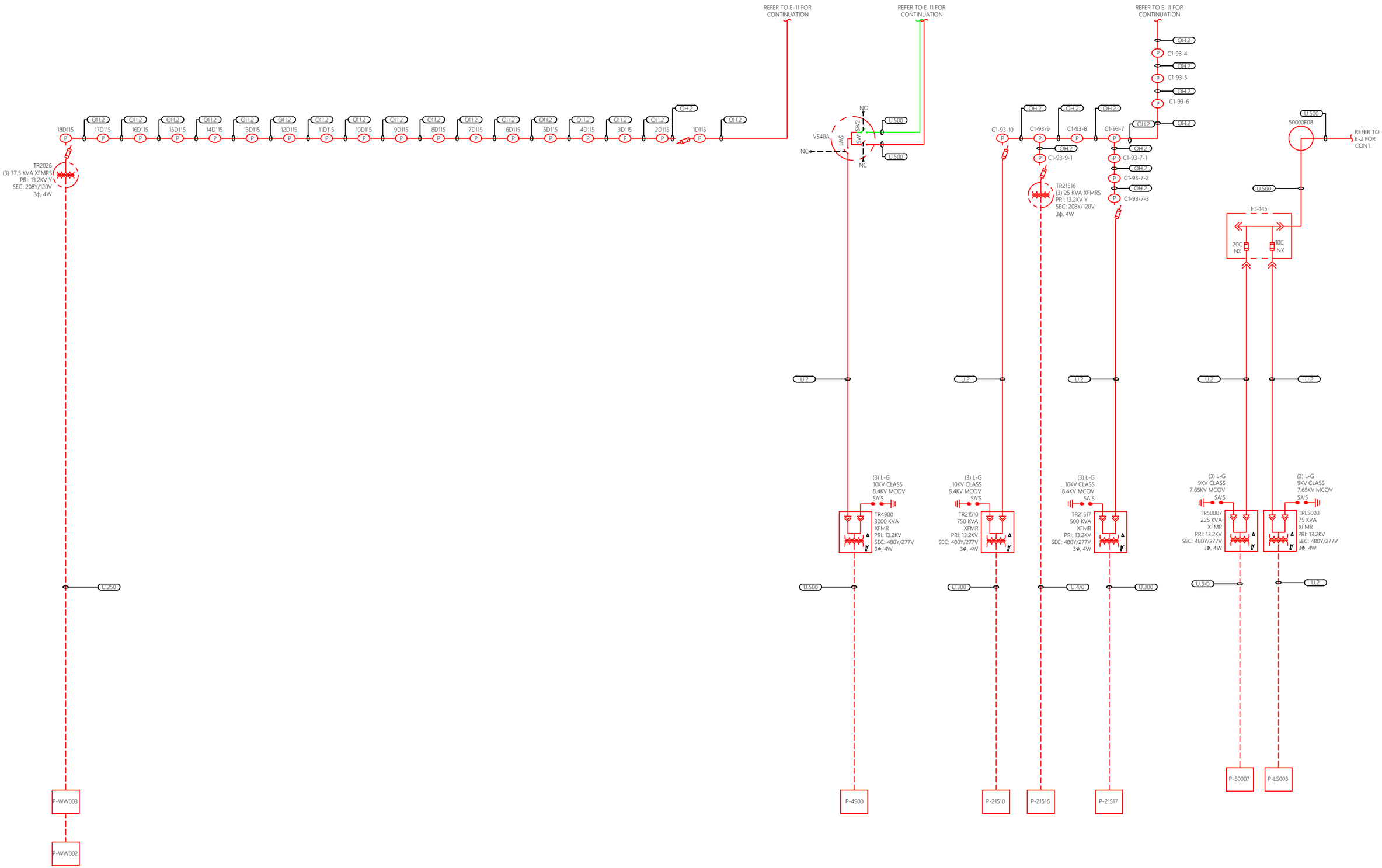

JADE STONE ENGINEERING

REVISION	DATE
100% FINAL	9/10/21

JSE JOB NO. 237-20

DATE: 09/10/2021

DRAWN BY: SAG

CHECKED BY: BCW

SCALE: AS NOTED

FORT DRUM

ELECTRICAL SINGLE LINE SURVEY

PID 20013

CONTRACT W911S20F6076

ELECTRICAL SINGLE LINE DIAGRAM

JSE SHEET NO.

E–1

PLOT: 9/14/2021 10:39 AM

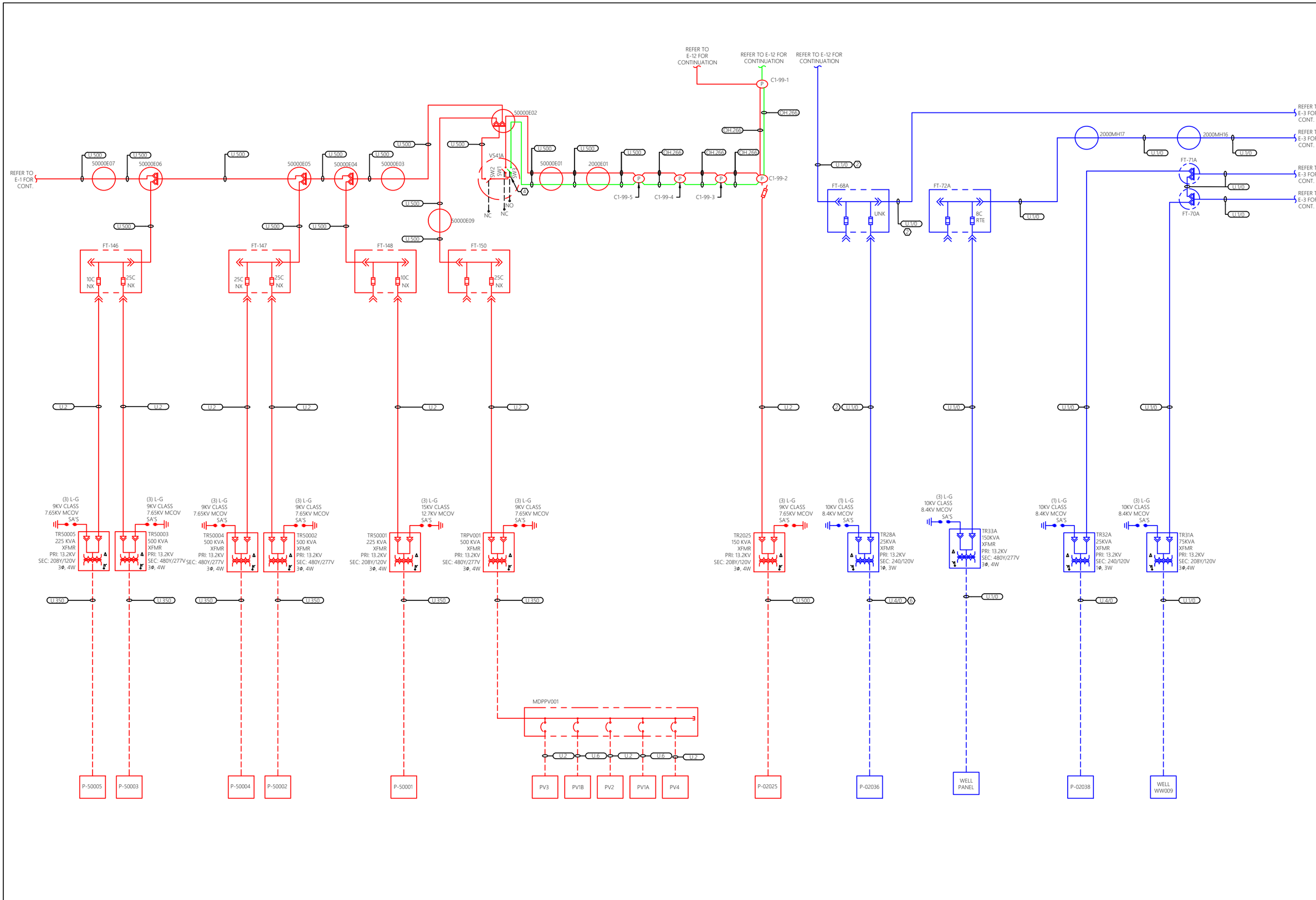

JADE STONE ENGINEERING

REVISION	DATE
100% FINAL	9/10/21

JSE JOB NO. 237-20

DATE: 09/10/2021

DRAWN BY: SAG

CHECKED BY: BCW

SCALE: AS NOTED

FORT DRUM

ELECTRICAL SINGLE LINE SURVEY

PID 20013

CONTRACT W911S2QF6076

ELECTRICAL SINGLE LINE DIAGRAM

JSE SHEET NO.

E-2

PLOT: 9/14/2021 10:39 AM

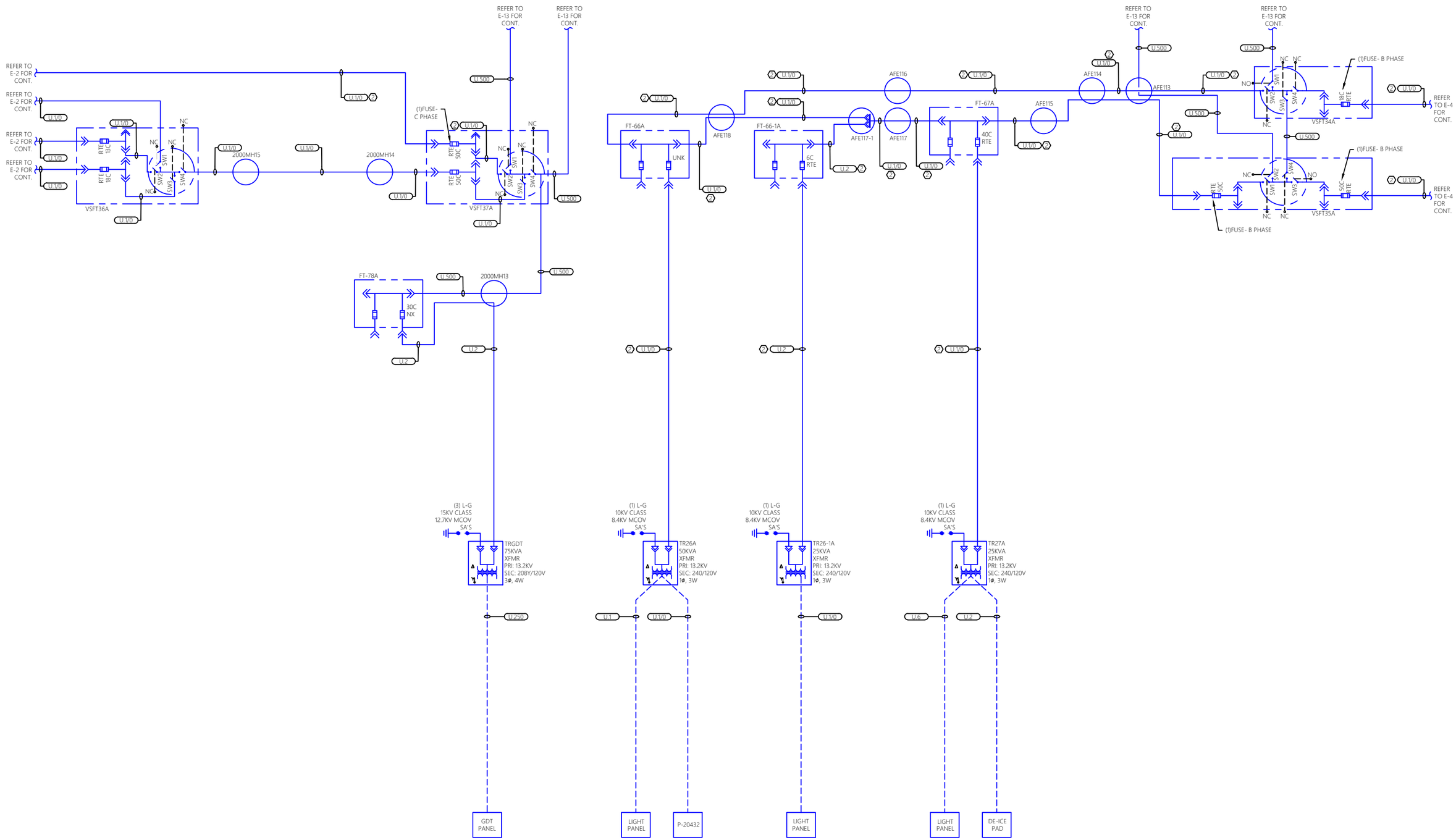

JADE STONE ENGINEERING

REVISION	DATE
100% FINAL	9/10/21

JSE JOB NO. 237-20

DATE: 09/10/2021

DRAWN BY: SAG

CHECKED BY: BCW

SCALE: AS NOTED

FORT DRUM
ELECTRICAL SINGLE LINE SURVEY
PID 20013
CONTRACT W911S2QF6076

ELECTRICAL SINGLE LINE DIAGRAM

JSE SHEET NO.

E-3

PLOT: 9/14/2021 10:40 AM

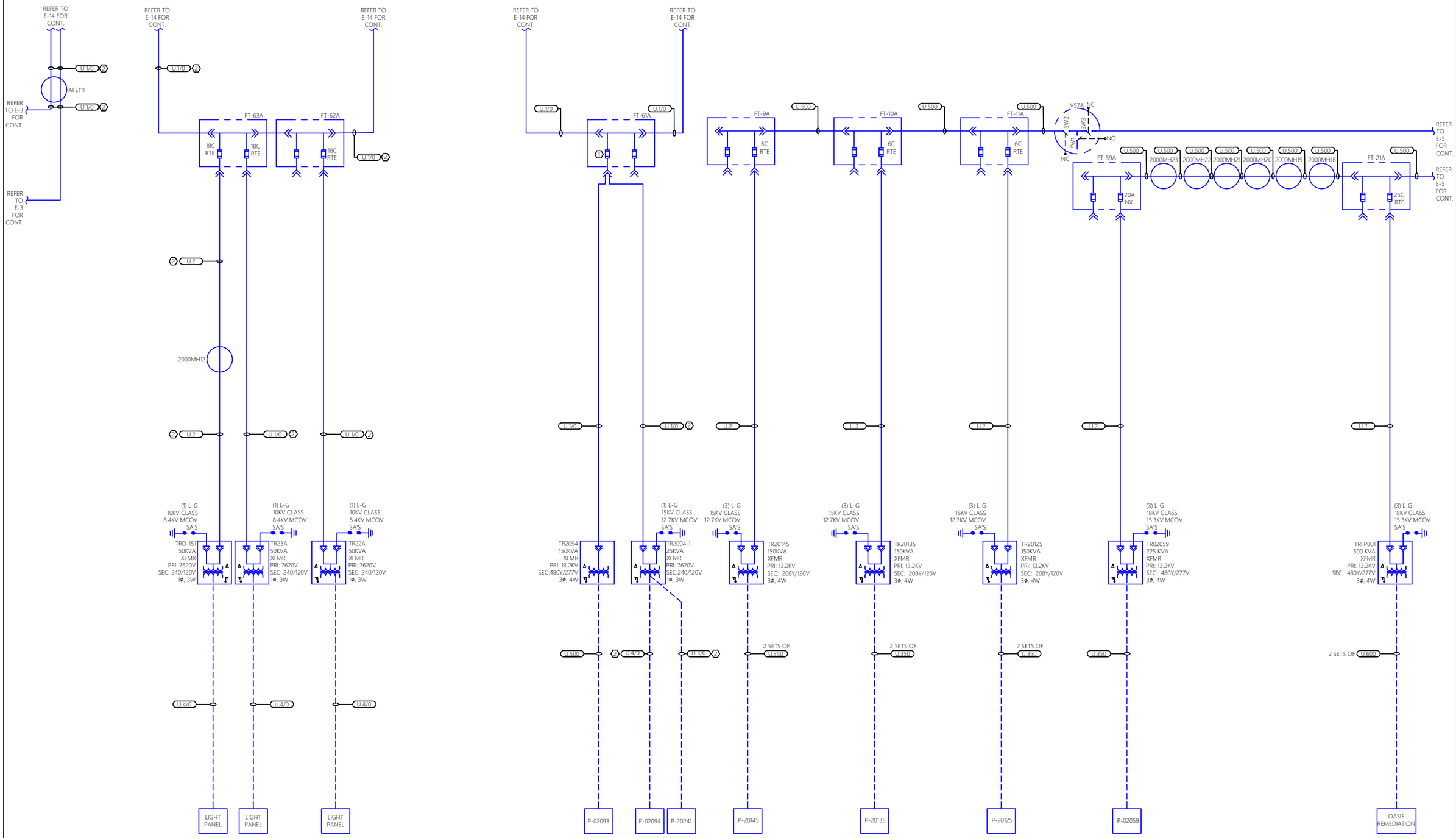

JADE STONE ENGINEERING

REVISION	DATE
100% FINAL	9/10/21

JSE JOB NO. 237-20

DATE: 09/10/2021

DRAWN BY: SAG

CHECKED BY: BCW

SCALE: AS NOTED

FORT DRUM

ELECTRICAL SINGLE LINE SURVEY

PID 20013

CONTRACT W911S20F6076

ELECTRICAL SINGLE LINE DIAGRAM

JSE SHEET NO.

E-4

PLOT: 9/14/2021 10:40 AM

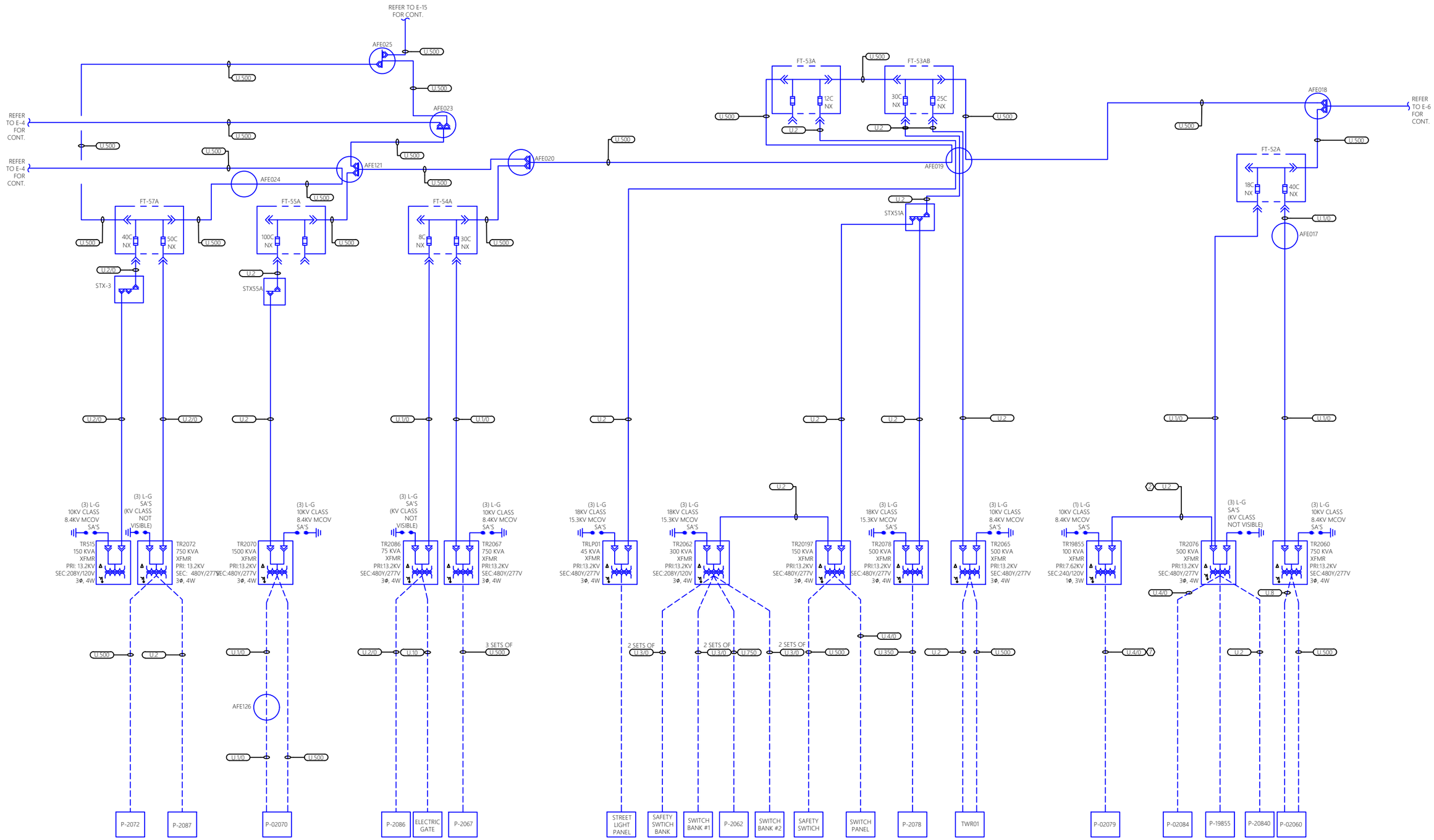

JADE STONE ENGINEERING

REVISION	DATE
100% FINAL	9/10/21

JSE JOB NO. 237-20
DATE: 09/10/2021
DRAWN BY: SAG
CHECKED BY: BCW
SCALE: AS NOTED

FORT DRUM
ELECTRICAL SINGLE LINE SURVEY
PID 20013
CONTRACT W911S20F6076

ELECTRICAL SINGLE LINE DIAGRAM

JSE SHEET NO.
E-5

PLOT: 9/14/2021 10:40 AM

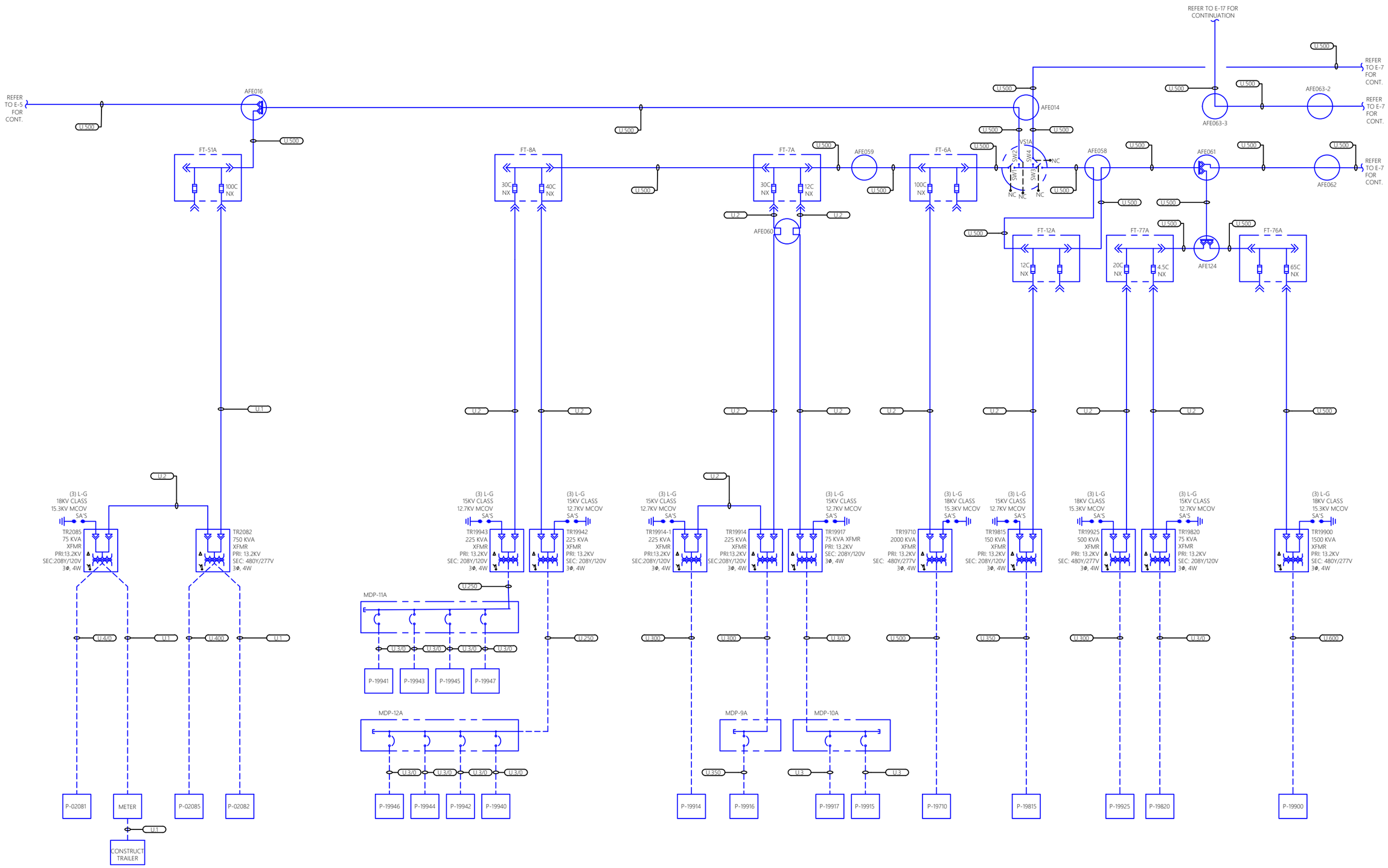

JADE STONE ENGINEERING

REVISION	DATE
100% FINAL	9/10/21

JSE JOB NO. 237-20

DATE: 09/10/2021

DRAWN BY: SAG

CHECKED BY: BCW

SCALE: AS NOTED

FORT DRUM

ELECTRICAL SINGLE LINE SURVEY

PID 20013

CONTRACT W911S2QF6076

ELECTRICAL SINGLE LINE DIAGRAM

JSE SHEET NO.

E-6

PLOT: 9/14/2021 10:40 AM

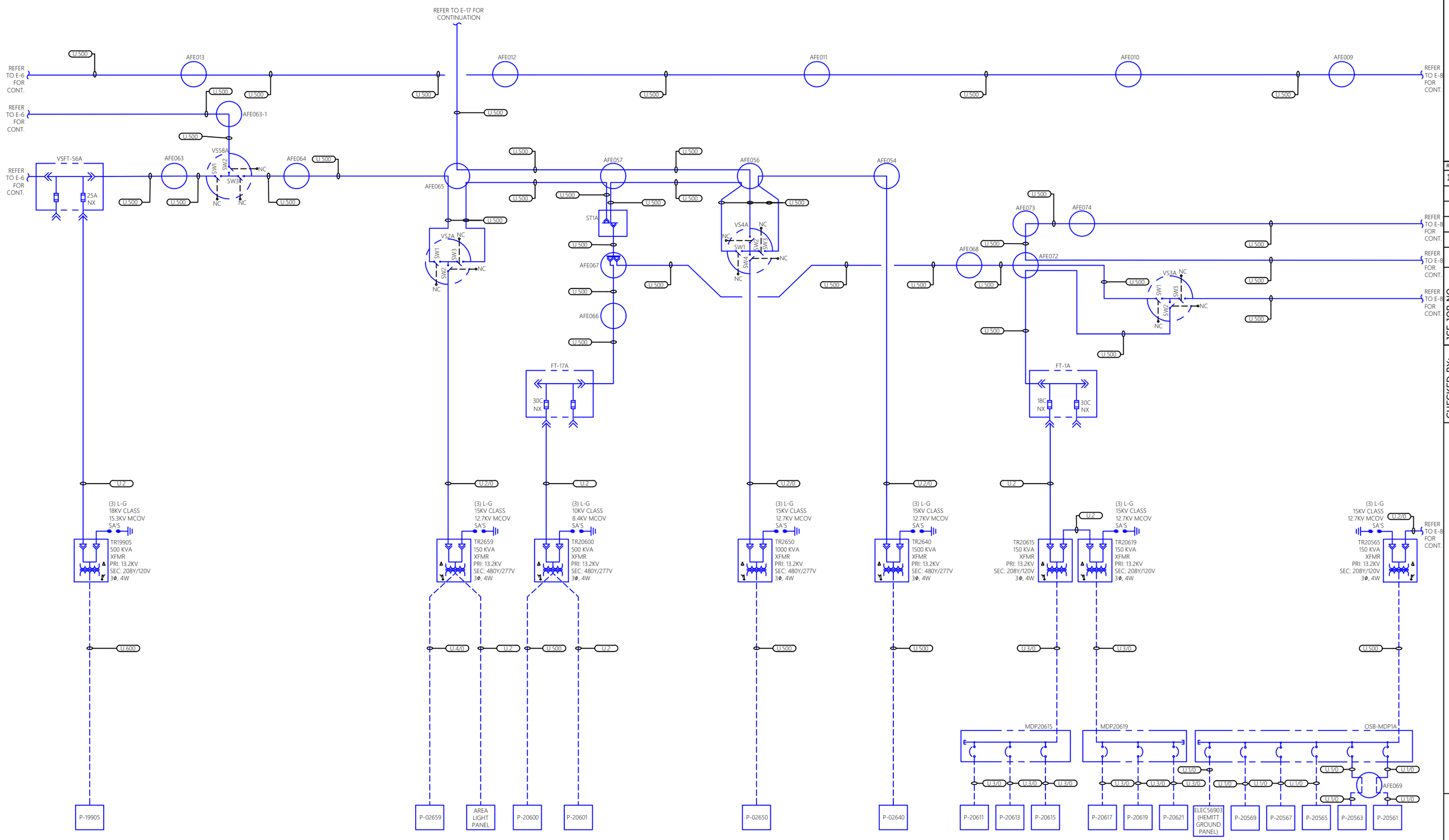

JADE STONE ENGINEERING

REVISION	DATE
100% FINAL	9/10/21

JSE JOB NO. 237-20

DATE: 09/10/2021

DRAWN BY: SAG

CHECKED BY: BCW

SCALE: AS NOTED

FORT DRUM

ELECTRICAL SINGLE LINE SURVEY

PID 20013

CONTRACT W911S2QF6076

ELECTRICAL SINGLE LINE DIAGRAM

JSE SHEET NO.

E-7

PLOT: 9/14/2021 10:40 AM

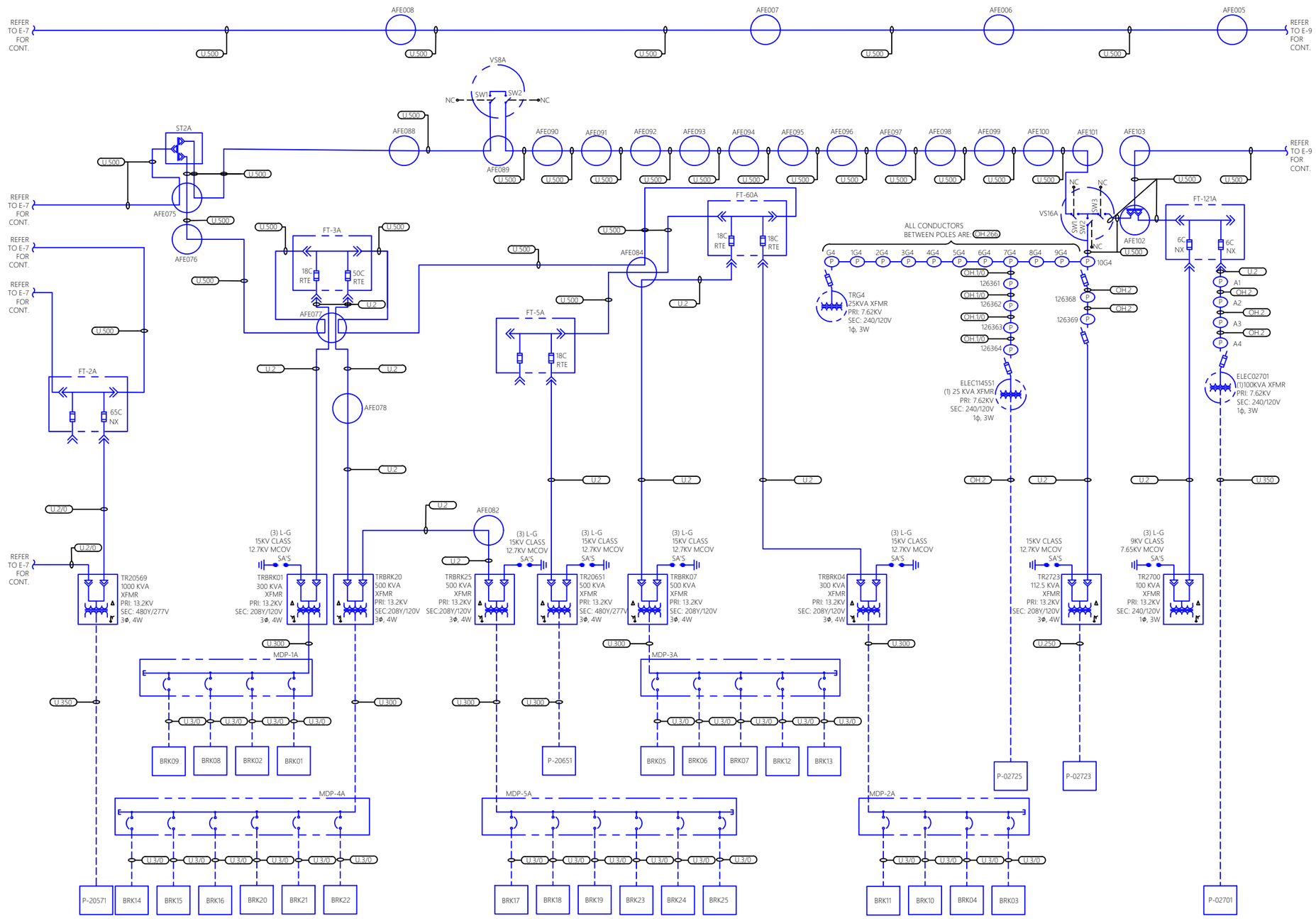

JADE STONE ENGINEERING

REVISION	DATE
100% FINAL	9/10/21

JSE JOB NO.

DATE: 09/10/2021

DRAWN BY: SAG

CHECKED BY:

SCALE: AS NOTED

FORT DRUM
ELECTRICAL SINGLE LINE SURVEY

PID 20013
CONTRACT W91S20F6076

ELECTRICAL SINGLE LINE DIAGRAM

JSE SHEET NO.

E-8

PLOT: 9/14/2021 10:40 AM

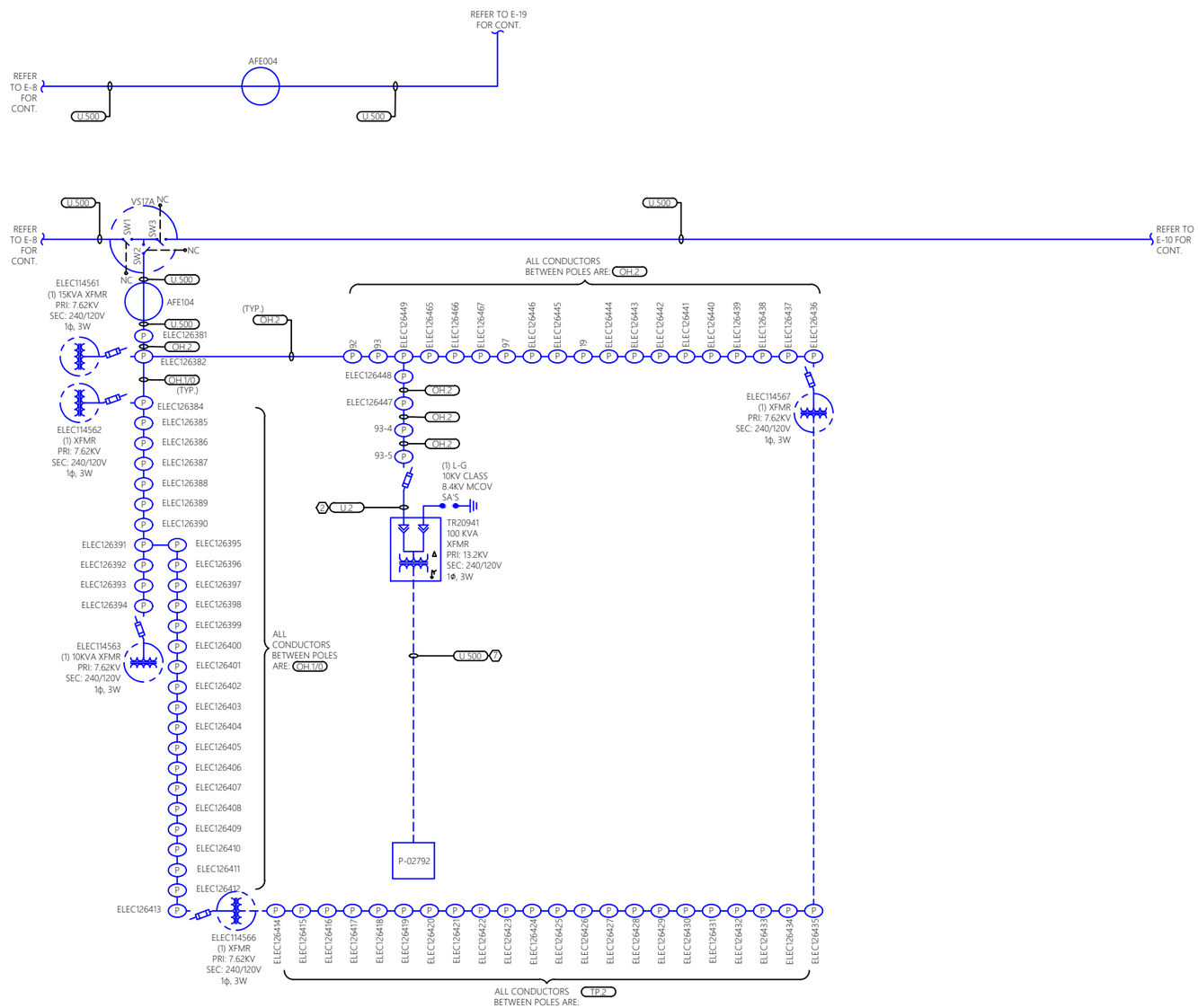

JADE STONE ENGINEERING

REVISION	DATE
100% FINAL	9/10/21

JSE JOB NO. 237-20

DATE: 09/10/2021

DRAWN BY: SAG

CHECKED BY: BCW

SCALE: AS NOTED

FORT DRUM

ELECTRICAL SINGLE LINE SURVEY

PID 20013

CONTRACT W911S20F6076

ELECTRICAL SINGLE LINE DIAGRAM

JSE SHEET NO.

E-9

PLOT: 9/14/2021 10:41 AM

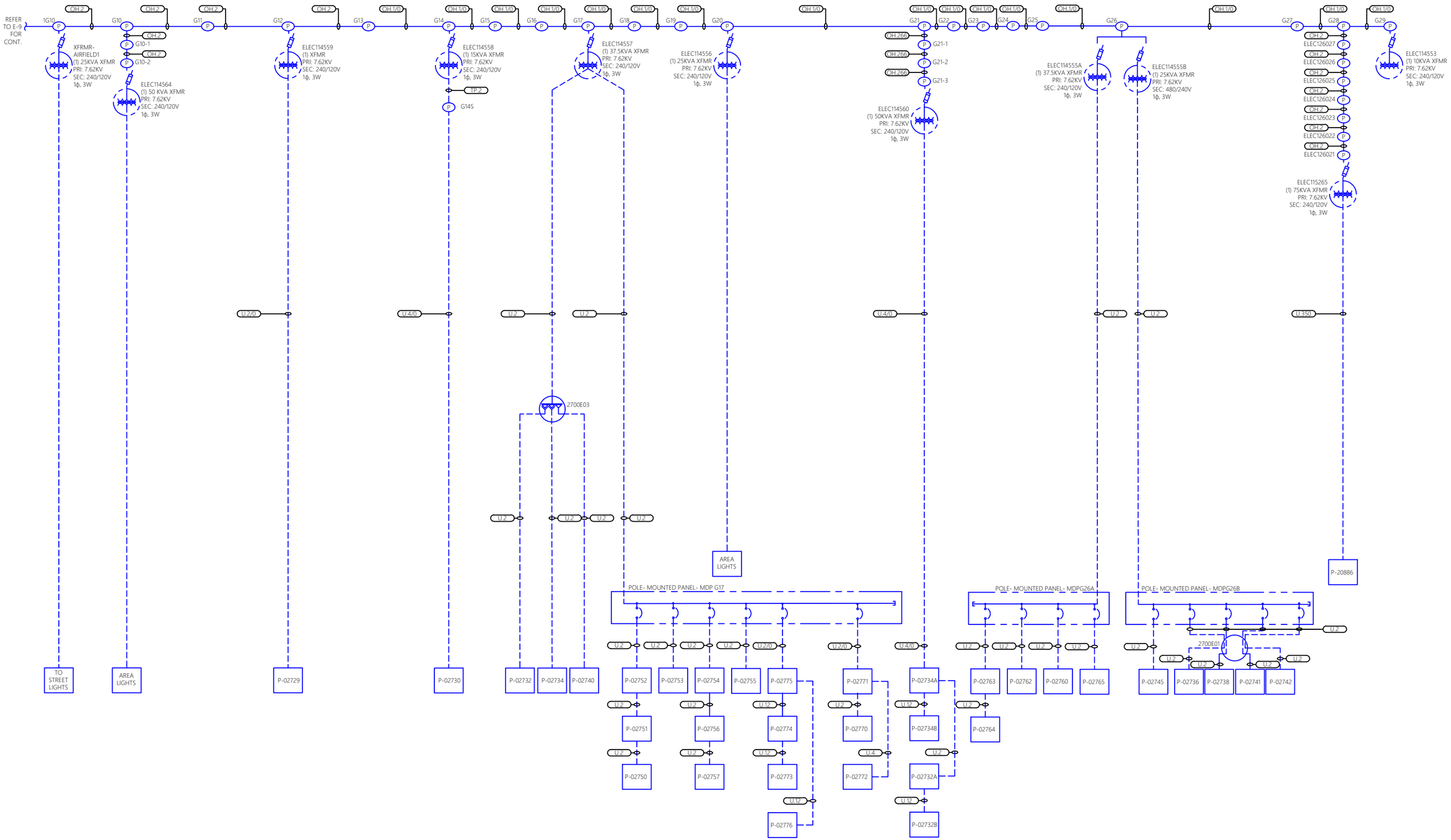

JADE STONE ENGINEERING

REVISION	DATE
100% FINAL	9/10/21

JSE JOB NO. 237-20

DATE: 09/10/2021

DRAWN BY: SAG

CHECKED BY: BCW

SCALE: AS NOTED

FORT DRUM

ELECTRICAL SINGLE LINE SURVEY

PID 20013

CONTRACT W911S20F6076

ELECTRICAL SINGLE LINE DIAGRAM

JSE SHEET NO.

E-10

KCF: 9/14/2021 10:41 AM

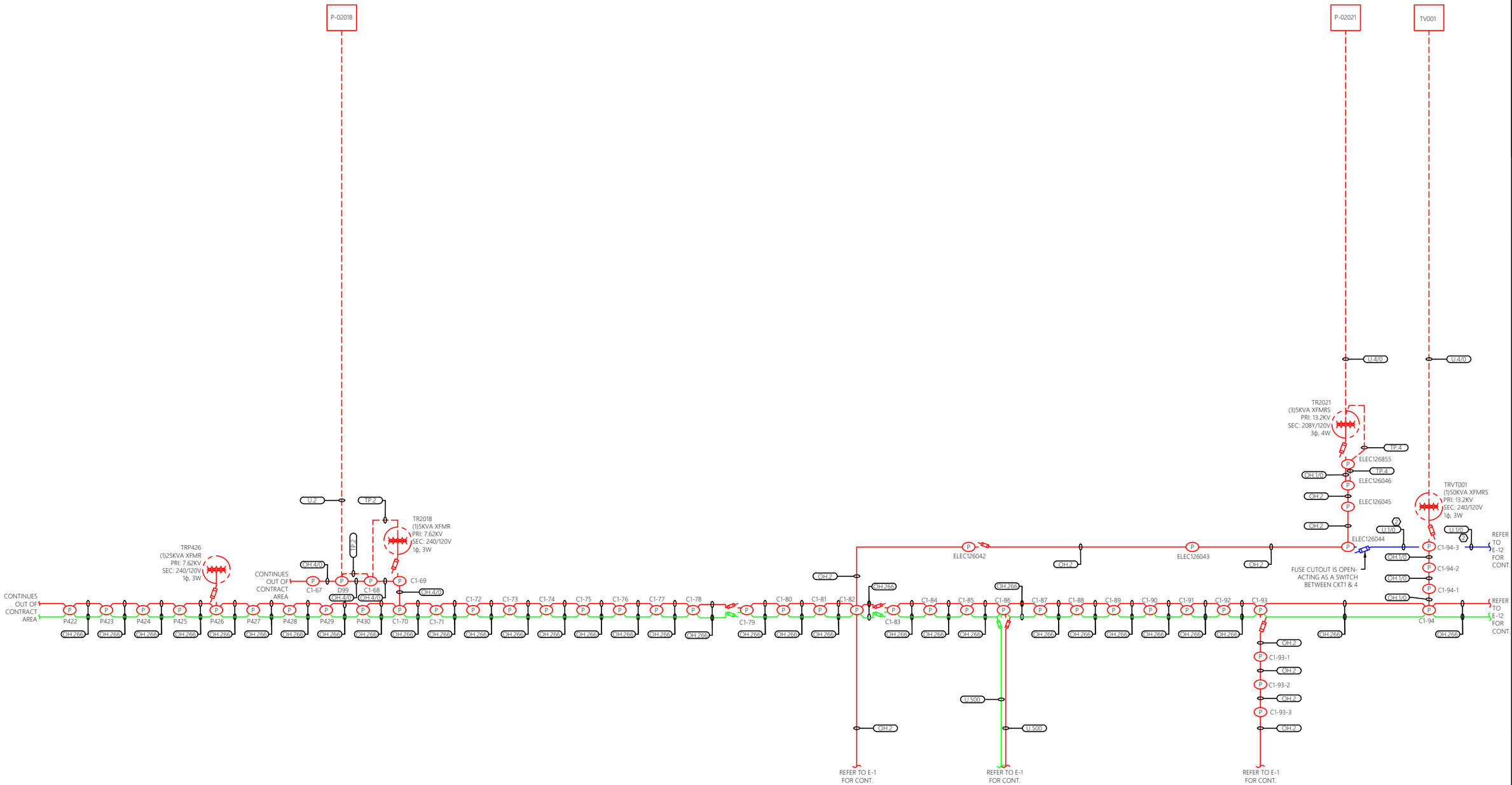

JADE STONE ENGINEERING

REVISION	DATE
100% FINAL	9/10/21

JSE JOB NO. 237-20	DATE: 09/10/2021	DRAWN BY: SAG
CHECKED BY: BCW	SCALE: AS NOTED	

FORT DRUM
ELECTRICAL SINGLE LINE SURVEY
PID 20013
CONTRACT W911S2QF6076

ELECTRICAL SINGLE LINE DIAGRAM

JSE SHEET NO.

E-11

PLOT: 9/14/2021 10:41 AM

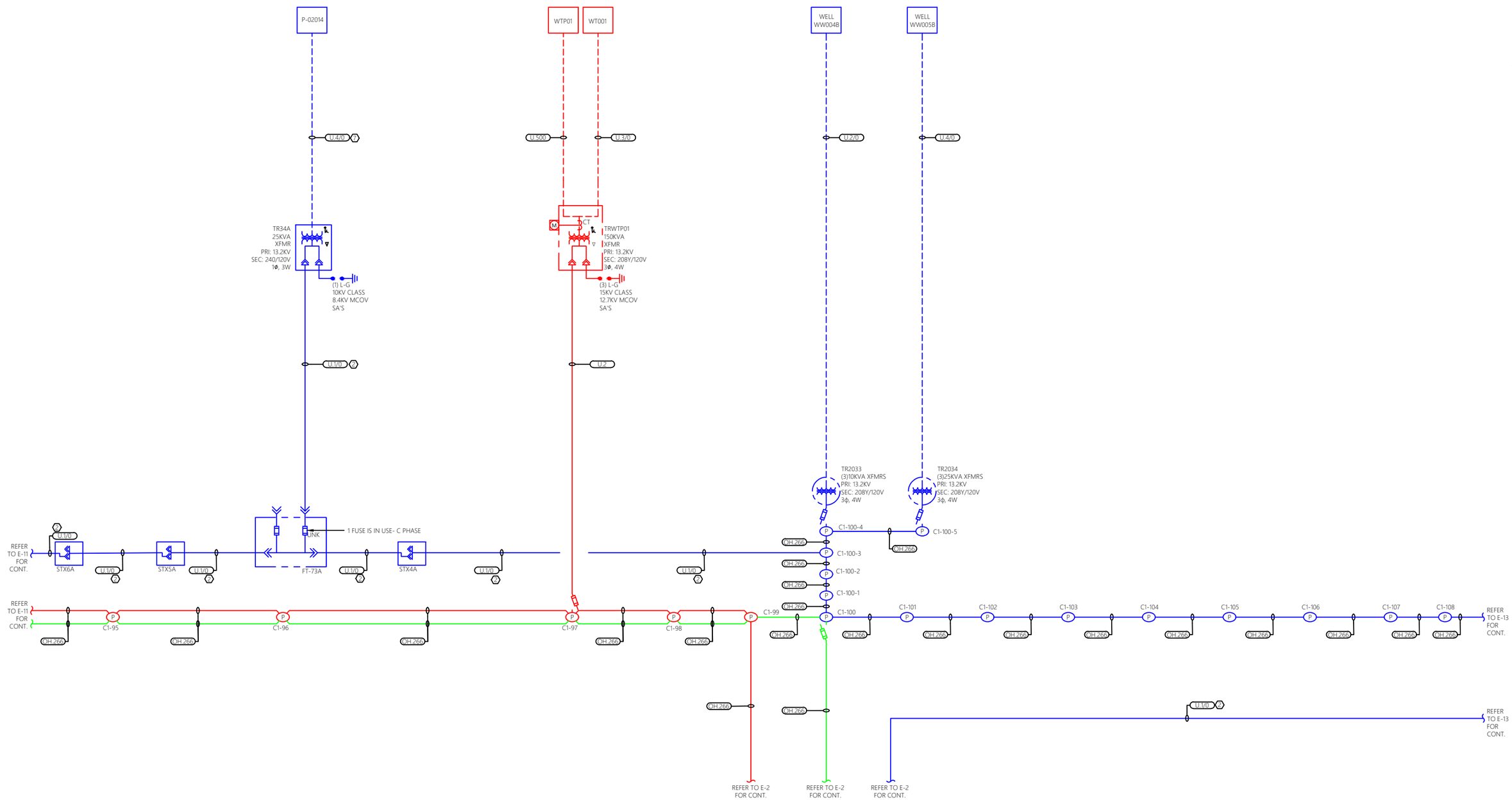

JADE STONE ENGINEERING

REVISION	DATE
100% FINAL	9/10/21

JSE JOB NO. 237-20

DATE: 09/10/2021

DRAWN BY: SAG

CHECKED BY: BCW

SCALE: AS NOTED

FORT DRUM

ELECTRICAL SINGLE LINE SURVEY

PID 20013

CONTRACT W911S20F6076

ELECTRICAL SINGLE LINE DIAGRAM

JSE SHEET NO.

E-12

PLOT: 9/14/2021 10:41 AM

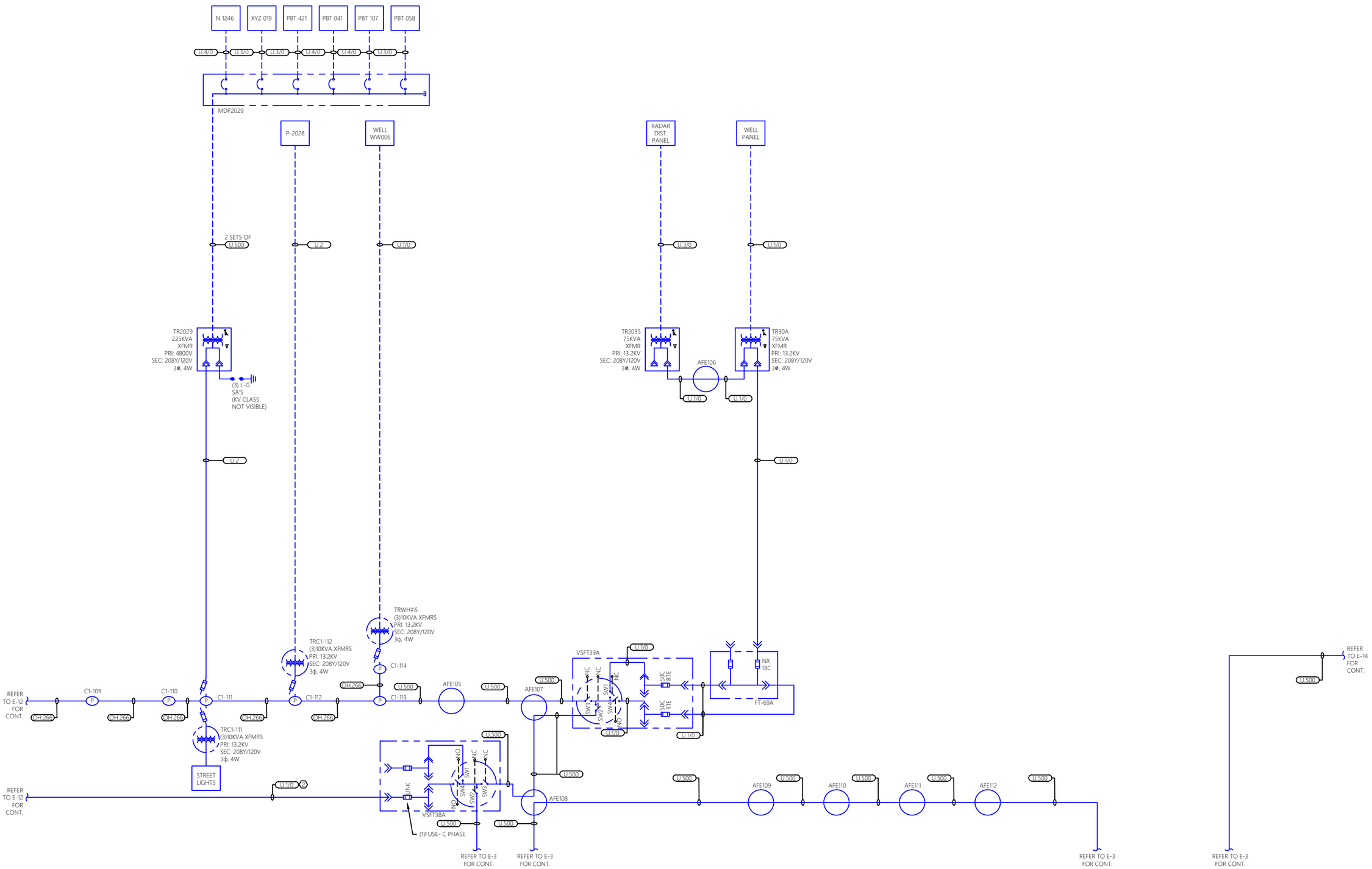

JADE STONE ENGINEERING

REVISION	DATE
100% FINAL	9/10/21

JSE JOB NO. 237-20

DATE: 09/10/2021

DRAWN BY: SAG

CHECKED BY: BCW

SCALE: AS NOTED

FORT DRUM
ELECTRICAL SINGLE LINE SURVEY
PID 20013
CONTRACT W911S20F6076

ELECTRICAL SINGLE LINE DIAGRAM

JSE SHEET NO.

E-13

PLOT: 9/14/2021 10:41 AM

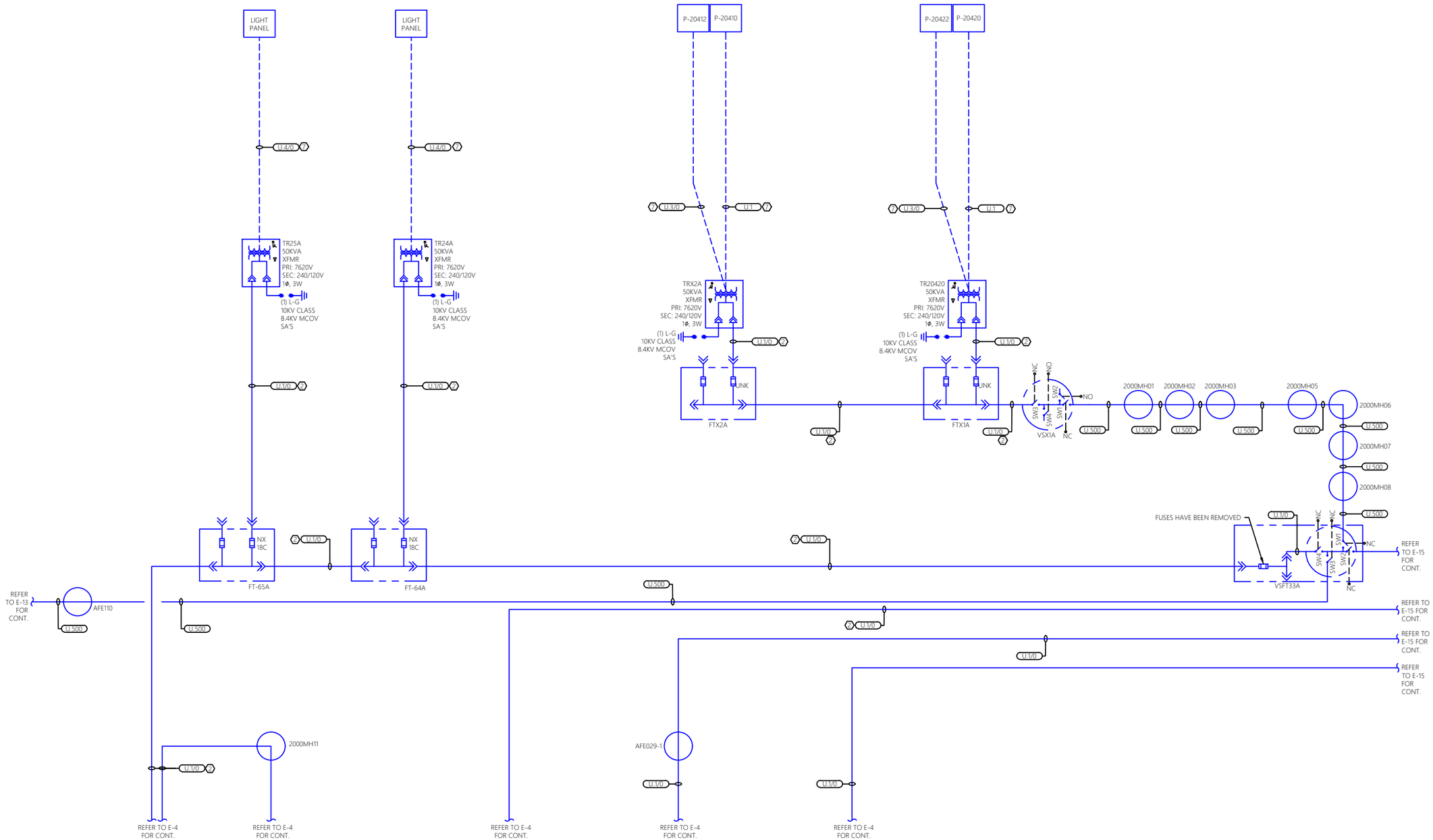

JADE STONE ENGINEERING

REVISION	DATE
100% FINAL	9/10/21

JSE JOB NO. 237-20	DATE: 09/10/2021	DRAWN BY: SAG
CHECKED BY: BCW	SCALE: AS NOTED	

FORT DRUM

ELECTRICAL SINGLE LINE SURVEY

PID 20013

CONTRACT W911S20F6076

ELECTRICAL SINGLE LINE DIAGRAM

JSE SHEET NO.

E-14

KOI: 9/14/2021 10:41 AM

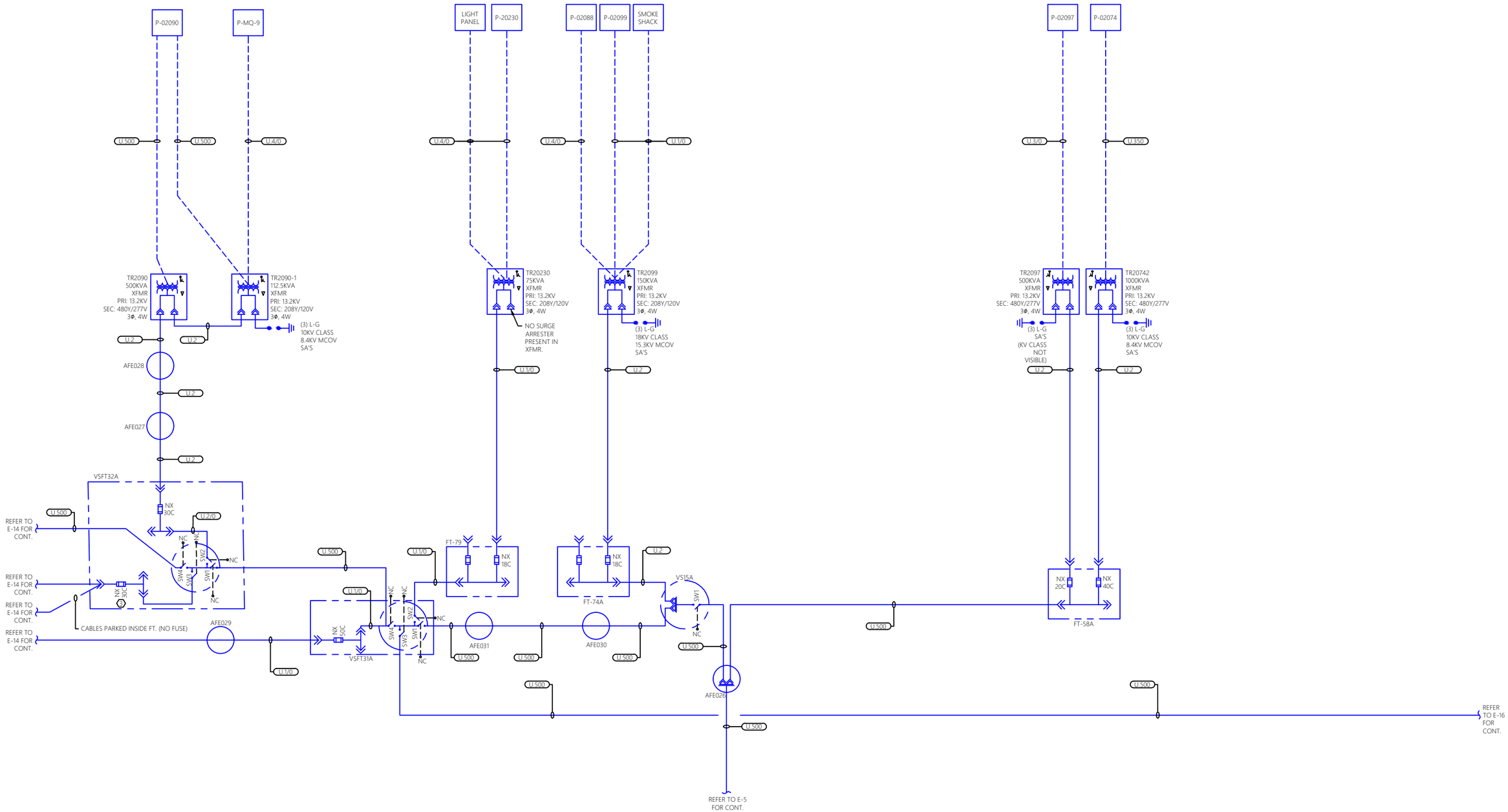

JADE STONE ENGINEERING

REVISION	DATE
100% FINAL	9/10/21

JSE JOB NO. 237-20

DATE: 09/10/2021

DRAWN BY: SAG

CHECKED BY: BCW

SCALE: AS NOTED

FORT DRUM

ELECTRICAL SINGLE LINE SURVEY

PID 20013

CONTRACT W911S20F6076

ELECTRICAL SINGLE LINE DIAGRAM

JSE SHEET NO.

E-15

PLOT: 9/14/2021 10:42 AM

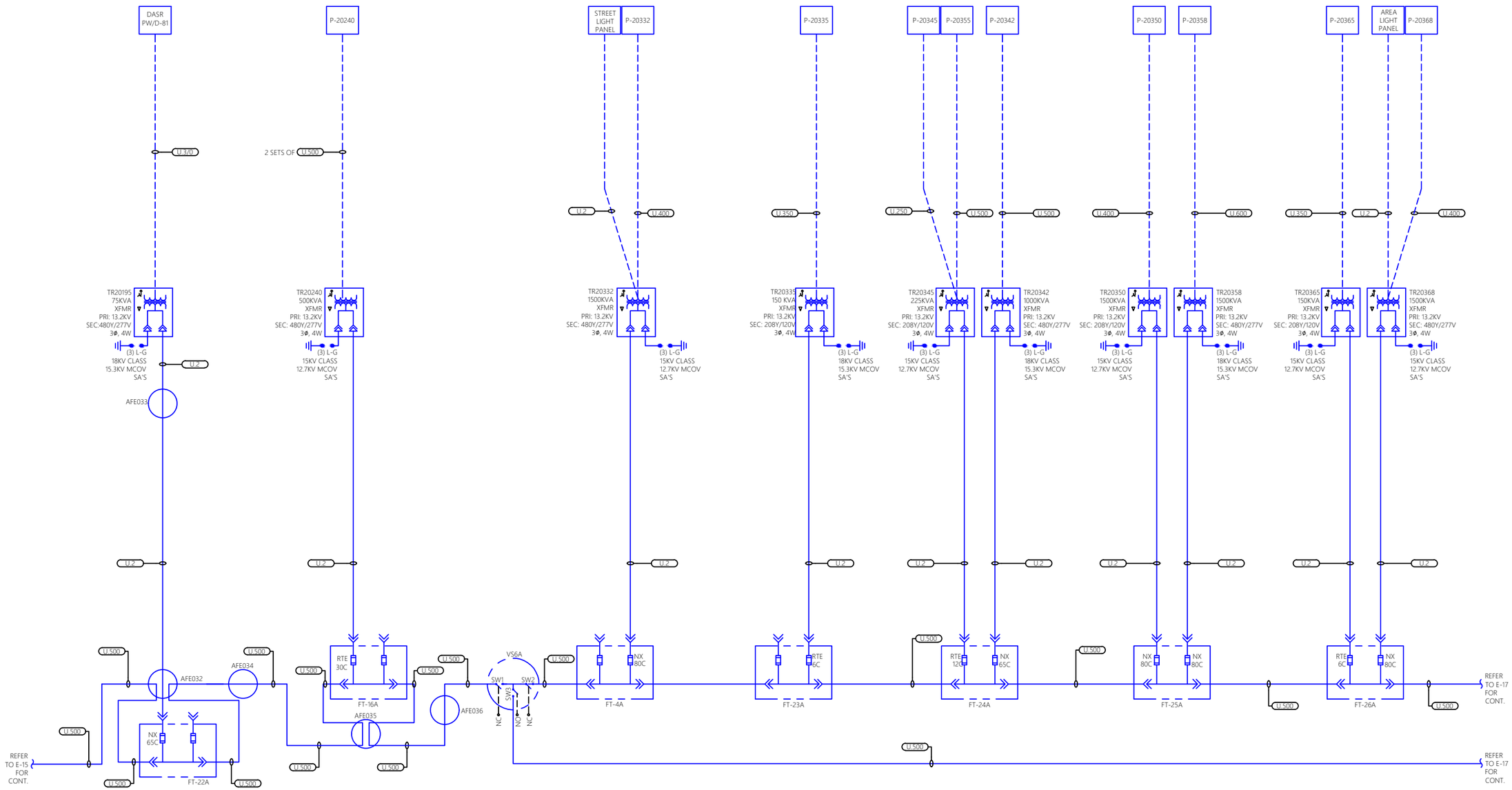

JADE STONE ENGINEERING

REVISION	DATE
100% FINAL	9/10/21

JSE JOB NO. 237-20

DATE: 09/10/2021

DRAWN BY: SAG

CHECKED BY: BCW

SCALE: AS NOTED

FORT DRUM
ELECTRICAL SINGLE LINE SURVEY

PID 20013

CONTRACT W911S20F6076

ELECTRICAL SINGLE LINE DIAGRAM

JSE SHEET NO.

E-16

PLOT: 9/14/2021 10:42 AM

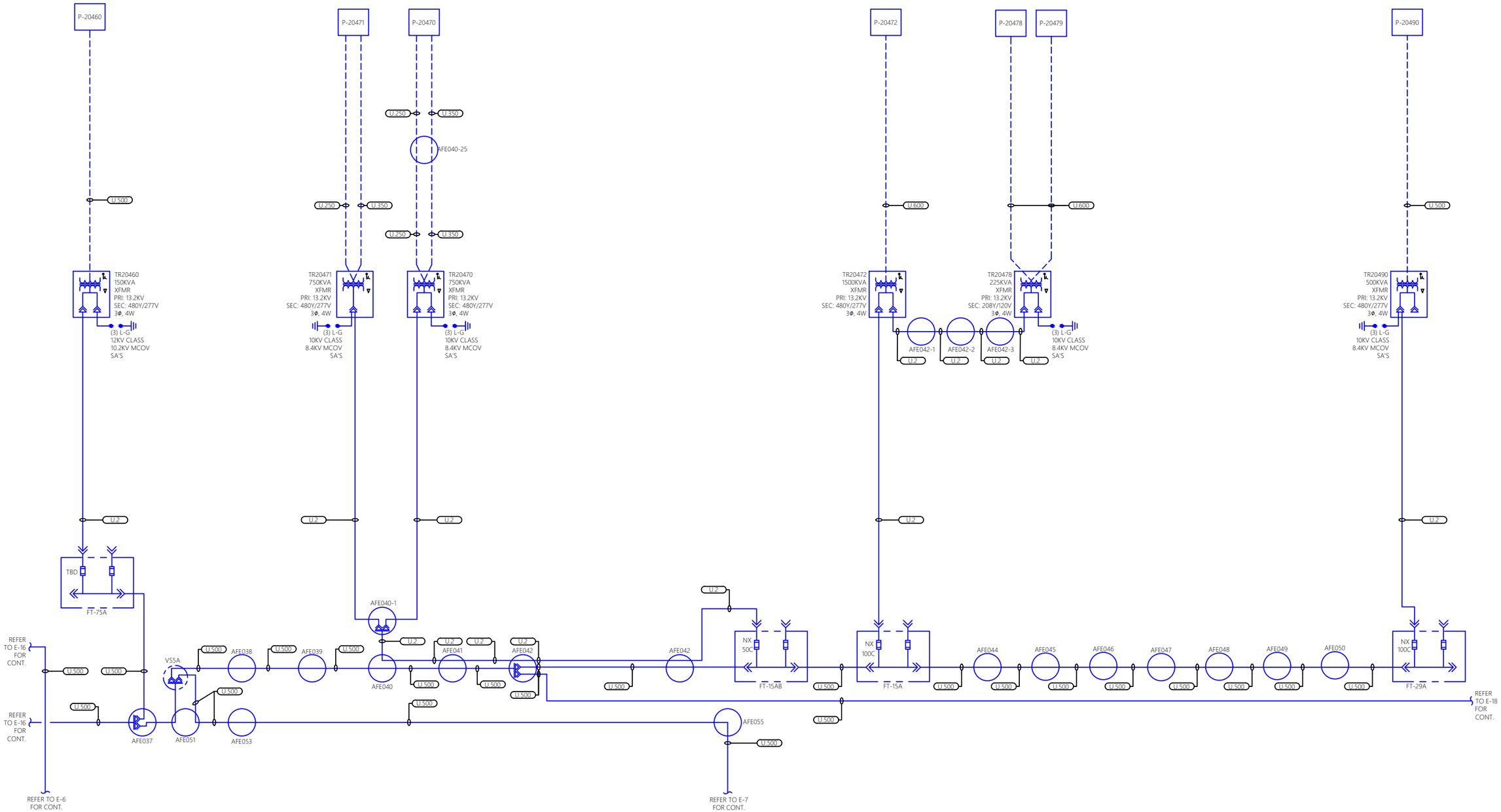

JADE STONE ENGINEERING

REVISION	DATE
100% FINAL	9/10/21

JSE JOB NO. 237-20

DATE: 09/10/2021

DRAWN BY: SAG

CHECKED BY: BCW

SCALE: AS NOTED

FORT DRUM
ELECTRICAL SINGLE LINE SURVEY
PID 20013
CONTRACT W911S2OF6076

ELECTRICAL SINGLE LINE DIAGRAM

JSE SHEET NO.

E-17

PLOT: 9/14/2021 10:42 AM

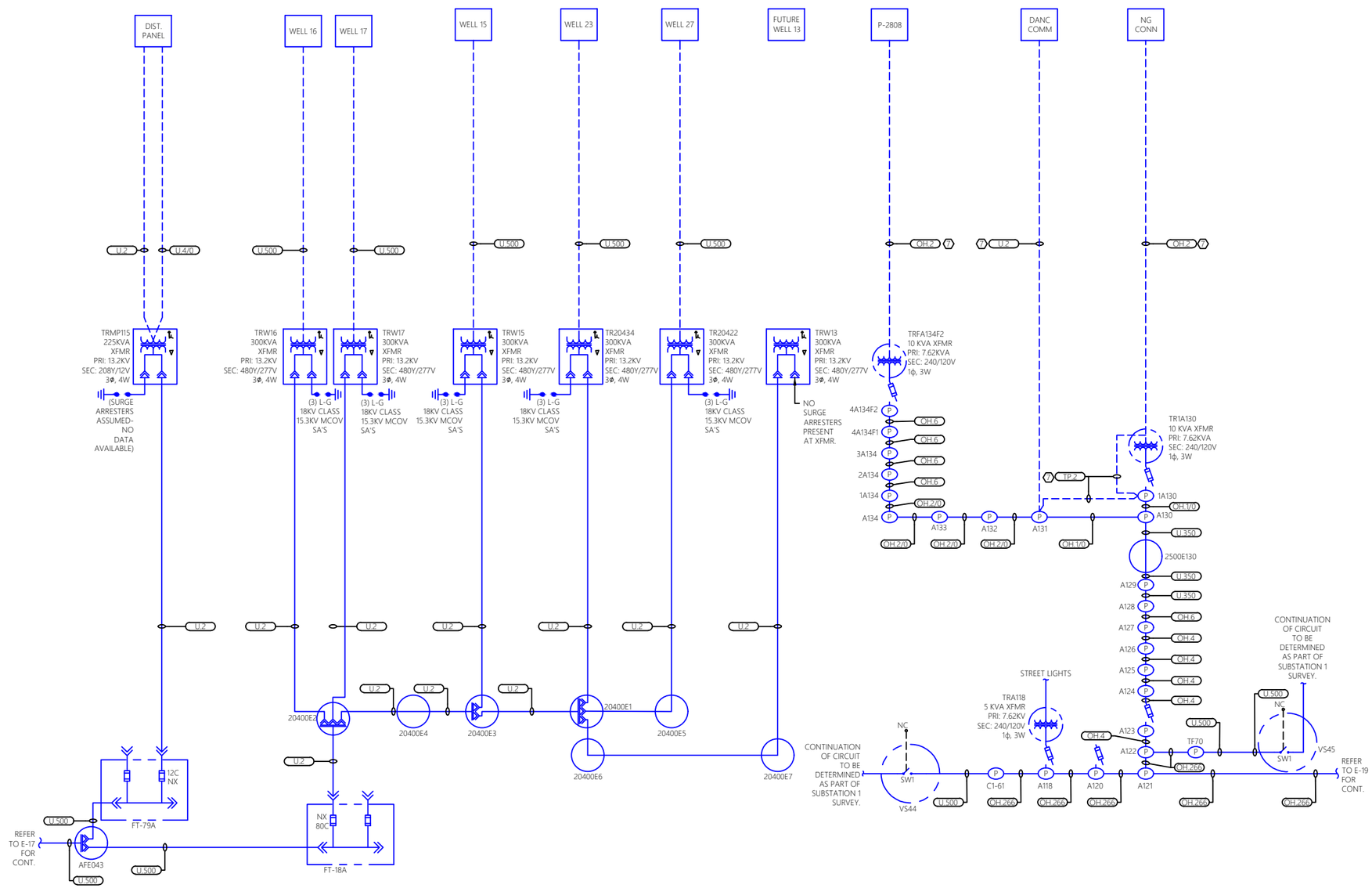

JADE STONE ENGINEERING

REVISION	DATE
100% FINAL	9/10/21

JSE JOB NO. 237-20

DATE: 09/10/2021

DRAWN BY: SAG

CHECKED BY: BCW

SCALE: AS NOTED

FORT DRUM

ELECTRICAL SINGLE LINE SURVEY

PID 20013

CONTRACT W911S20F6076

ELECTRICAL SINGLE LINE DIAGRAM

JSE SHEET NO.

E-18

KSF: 9/14/2021 10:42 AM

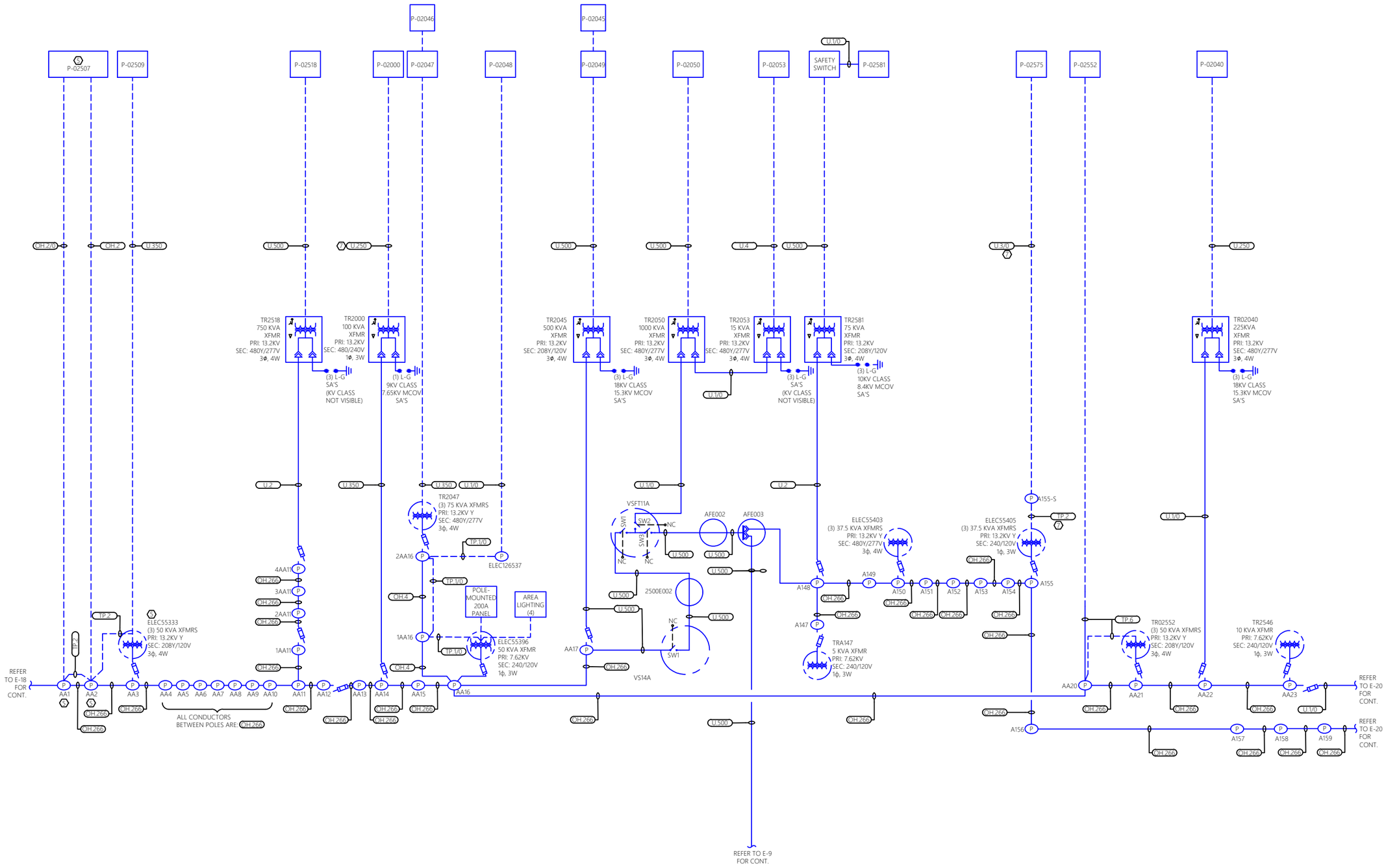

JADE STONE ENGINEERING

REVISION	DATE
100% FINAL	9/10/21

JSE JOB NO. 237-20
DATE: 09/10/2021
DRAWN BY: SAG
CHECKED BY: BCW
SCALE: AS NOTED

FORT DRUM
ELECTRICAL SINGLE LINE SURVEY
PID 20013
CONTRACT W911S20F6076

ELECTRICAL SINGLE LINE DIAGRAM

JSE SHEET NO.
E-19

PLOT: 9/14/2021 10:42 AM

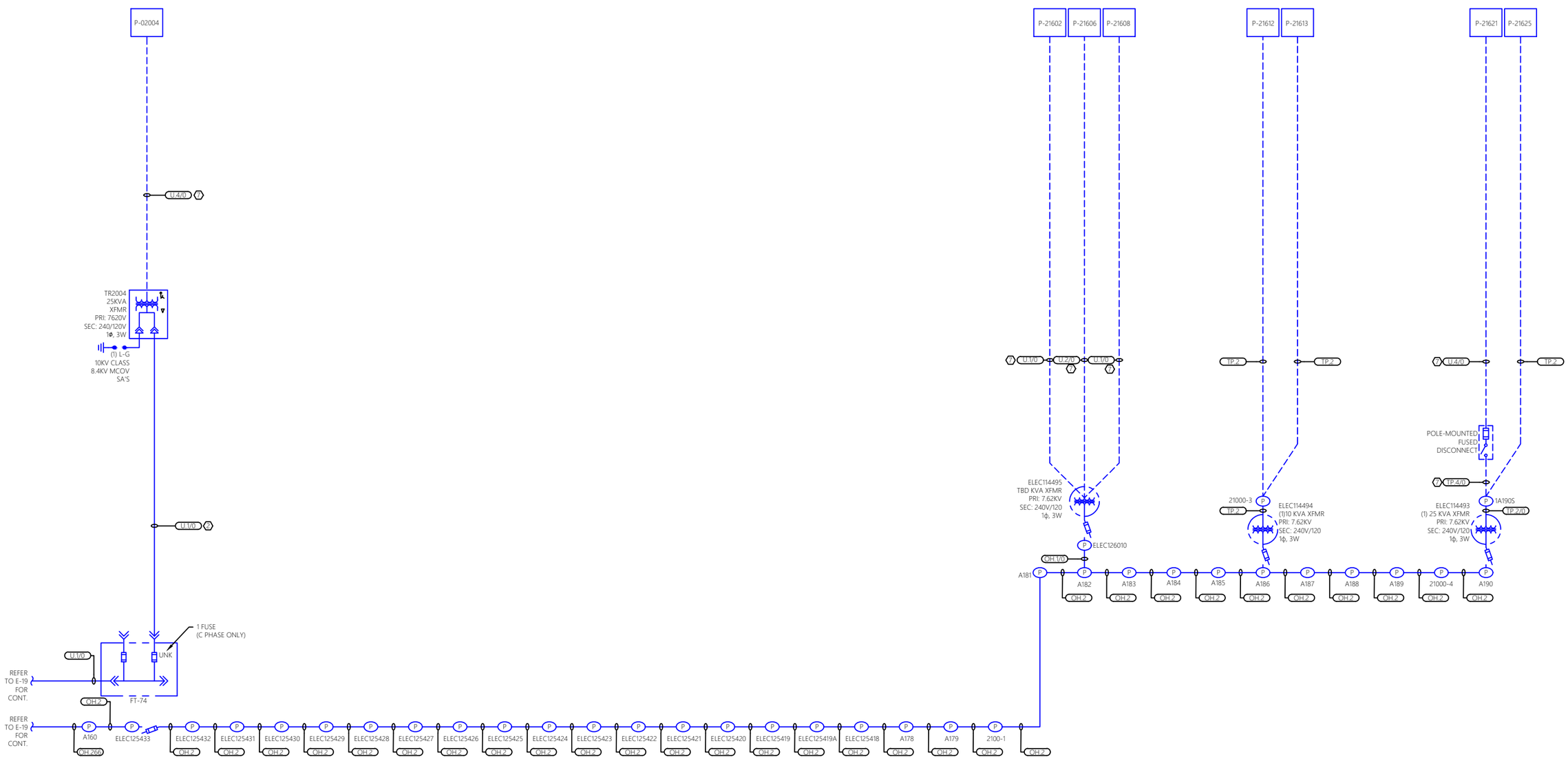

JADE STONE ENGINEERING

REVISION	DATE
100% FINAL	9/10/21

JSE JOB NO. 237-20

DATE: 09/10/2021

DRAWN BY: SAG

CHECKED BY: BCW

SCALE: AS NOTED

FORT DRUM

ELECTRICAL SINGLE LINE SURVEY

PID 20013

CONTRACT W911S20F6076

ELECTRICAL SINGLE LINE DIAGRAM

JSE SHEET NO.

E-20

PLOT: 9/14/2021 10:42 AM