REV: 1.0	ENGINEERING DATA REQUIREMENTS (ATTACHMENT "A")

NOTE: MILITARY SPECIFICATIONS / STANDARDS WILL NOT BE FURNISHED IN THE BID SET.

1. THE FOLLOWING INSTRUCTIONS ARE FURNISHED FOR THE MANUFACTURE OF A:
Support,Frustum-MXU-595-A

2. PART NUMBER:	3. NATIONAL STOCK NUMBER:
68J52342G2	1420-004351313

4. In the SAW Form 761,for 'CRITICALITY CODE':
WAS: X
IS: M
A cataloging change has been initiated.

5. Engineering Data List (EDL) and part procurability information is attached, as well as a legible copy of 68J52342.

6. For drawing 66D48442 P1 - P8, Add alternate 7075-T7352.
This change has been authorized per the Systems Directorate and is in JIRA as EO-7614.

For drawing 68J52342G2, Item 33, Add alternate A-A-56032 color 11140 red
Item 57, Add alternate A-A-56032 color 17038 black
This change has been authorized per the Systems Directorate and is in JIRA as EO-7666.

For drawing 165A4413, Add alternate AT-406 to P3. The vendor procurement information is shown below and the TDS is attached to this document. Please see the TDS for testing and acceptance criteria.

Vendor: Utah Foam Products (CAGE 59134)
3609 South 700 West
Salt Lake City, UT 84119
inquiries@utahfoam.com (801) 269-0600

This change has been authorized per the Systems Directorate and is in JIRA as EO-7667.

7. Fielded Frustum 68J52342G2 is available by appointment for technical questions and inspection.

8. See below for a copy of the 68J52342G2 Special Packaging Instructions (SPI).

PEPARED BY:	OFFICE SYMBOL:	DATE:
CHENEY.DAVID.LEE.1537393579 Digitally signed by CHENEY.DAVID.LEE.1537393579 Date: 2026.04.13 09:00:57 -06'00'	414 SCMS/GUEA	13 APR 2026

1															
2		Document is in Screener's EDL and is available in ATEAMs													
3		Document is not in sreener's EDL but is available in ATEAMs													
4		Document is not available in ATEAMs													
5		Document is a specification and is not needed in EDL, but is noted for supportability purposes.													
6		Document is available in ATEAM, but is not needed on EDL													
7	Example	Greyed text means the document is a duplicate of the same document in a higher tier or earlier in the list at the same tier.													
8	Tier 0	Rev	Tier 1	Rev	Tier 2	Rev	Tier 3	Rev	PN	Noun	Orig Cage	Current Cage	EOs	Comments	
9	68J52342	AM								SUPPORT, FRUSTUM MXU-595/A	07868	07868			
10			118A1664	J						DRAWING TERMS AND TOLERANCES - INTER	15226	15226	21A3065-H	INACTIVE. USE THE DOCUMENTS REFERENCED HEREIN	
11					S30009	D				DRAWING TERMS AND SHOP RUN TOLERAN	23991	98747	18A0774-H, 21C3055-H		
12							171A4190	AA		SOIVENTS, CLEANING, HIGH PURITY	79272	98747	13A0090-H		
13					S34060	A				DRAWING TERMS AND SHOP RUN TOLERAN	15226	98747	18A0635-H, 21A3054-H		
14							S34056	A		RIVET, PINS, AND LOCKBOLTS, REQUIREMEN	15226	98747	18A0541-H, 21A3061-H		
15							S34059	B		TORQUE REQUIREMENTS FOR THREADED PA	15226	15226	20A6522-H		
16			118A1526	AE						IDENTIFICATION MARKING	15226	98747	2024A7004-H		
17					R6591	-				MARKING INK, PERMANENT, (MACHINE APPL	15226	98747	18A1028-H, 21A3057-H		
18					118A1526/1	B				IDENTIFICATION MARKING	15226	98747	18A0034-H, 21A3091-H		
19			68B48450	YY						NAMEPLATE/MARKING CONTROL DRAWING	07868	98747	16A0130-H		
23			69A47546/1	B						RIVETING - REQUIREMENY=TS FOR HI-SHEA	07868	07868			
24					66A50887	-				PIN-100 COUNTERSUNK HEAD, 125, 000 PSI	07868	07868			
25					66A50888	-				COLLAR, RIVET PIN, MONEL SPECIFICATION	07868	07868			
29			69A47546/2	B						RIVETING - REQUIREMENTS FOR SOLID TYPE	07868	98747	21A3059-H		
30			64A51300	AD					64A51300F2005	FINISH REQUIREMENTS-MARK 12 AVE	07868	07868	2023A0048-H		
31					76A41143	-				Lubricant, Solid Film, Air Drying	07868	07868	99A0013-H		
32					AFBSD EXHIBIT 62-84					STANDARDIZATION EXHIBIT	07868			DNE	
33					AFBM EXHIBIT 59-31					COLOR REQUIREMENTS FOR BALLISTIC MISS	07868			DNE	
34					AFBSD EXHIBIT 62-88	D				FINISH CRITERIA	07868	07868		Missing most of the pages.	
35					AFBSD EXHIBIT 62-89					PACKAGING	07868			DNE	
36					AFBSD EXHIBIT 63-63					ENVIRONMENTAL DESIGN CRITERIA, MARK	07868			DNE	
37					118A1669	E				MYLAR PLATES, IDENTIFICATION AND INFOR	15226	15226			
40			165A4414	D						POLYURETHANE FOAMS, RIGID, CO2 NLOWN	15226	15226			
45			65A5683	D						ADHESIVE, EPOXY POLAMIDE	07868	07868	10A1409-H	Replaced by MSP535148P1.	
46					MSP535148	-			MSP535148P1	MATERIAL SPECIFICATION FOR CASTING RES	15228	98747	06A0609-H, 20A6634-H	Available as Scotchcast #8N for P1 and Available as Scotchcast #9N for P2 from 3M.	
47			165A4413	F						POLYURETHANE FOAM, RIGID, CO2 - BLOWN	15226	15226			
48			65A5685	B						TROWELABLE CORK, ABLATIVE INSULATION	07868	98747	15A0969-H		
49					128A5454	H			RSD 128A5454, TY2	RESINS, LIQUID EPOXY	15226	15228		Inactive for future use. Superseded by MSP535143.	
50							MSP535143	-		LIQUID EPOXY RESINS	15228	15228	HER2537		
51					146A9264	J			146A9264P2	MODIFIERS, POLYAMINE RESINS	15226	98747	15A0970-H		
54			67A59765	A						MASS PROPERTIES MEASUREMENT ASSURAC	07868	07868			
55			67A60291	B						PIN - COUNTERSUNK HEAD, 7075T6 ALUMIN	07868	07868			
56			67A53012	A						COLLAR, RIVET PIN, 2117-T4 ALUMINUM SPE	07868	07868			
57			67A53011	B						PIN - PROTRUDING HEAD, 7075T6 ALUMINU	07868	07868			
58			R2232	J					R2232P36-3	FASTNER - PIN AND COLLAR ONE SIDE ASSEM	15226	79272			
59			76J41727	-					76J41727DF-01						
60	68J52342G2	AK							68J52342G2	SUPPORT, FRUSTUM MXU-595/A	07868	07868	W/PL		
103			67E54774	F					67E54774P1	RING INTERFACE SEPARATION	07868	07868		7079-T651 or -T652. Creating EO for material change to 7075-T7352 and adding to El. Forger, Scot Forge, was able to quote to forge rings with 7075-T7352 material per 143A9304 and with heat treat per AMS 2772.	
104					66D48442	E			66D48442P8	RING, BLANK	07868	07868		See above.	
105							146A9304	D		ROLLED AND HAND FORGED ALUMINUM AL	04615	04615			
115			66D50659	E					66D50659P1	RING, FORWARD - SUPPORT STRUCTURE	07868	07868		7079-T651 or -T652. Creating EO for material change to 7075-T7352 and adding to El. Forger, Scot Forge, was able to quote to forge rings with 7075-T7352 material per 143A9304 and with heat treat per AMS 2772.	
116					66D48442	E			66D48442P2	RING, BLANK	07868	07868		See above.	
127			68D48692	-					68D48692P1, P2	STIFFNER, DISPENSER OPENING - FRUSTUM	07868	07868		Make from AND10137-2004, 2024-T4 per QQ-A-200/3. Machine shop should be able to produce.	
137			67D54685	A					67D54685P1, P2, P5	STIFFNER, FRUSTUM ASSEMBLY	07868	07868		2024-0 per QQ-A-250/4. Heat treat to T42 per MIL-H-6088. Machine shop should be able to produce.	
147			67C54586	-					67C54586P1	CLIP, STIFFENER SUPPORT STRUCTURE	07868	07868		AND 10136-1607. 2024-T4 per QQ-A-200/3. Machine shop should be able to produce.	
157			68D48689	B					68D48689P1	PAN, CLOSURE - FRUSTUM	07868	07868		0.063 THK 6061-0 QQ-A-250/11. Machine shop should be able to produce.	
167			68D48690	B						FRAME ASSEMBLY, IFD ACCESS HOLE - SUPP	07868	07868		See Below.	

186			68D48690G1	B						FR - IFD ACCESS HOLE SPT FRUSTUM	07868	07868	W/PL	7075-0 QQ-A-250/12. T6 PER MIL-H-6088. Machine shop should be able to produce.
190					R3356	A			R3356P21	NUT, CAPPED	15226	15226		MT2S1032K1. Lots available in ILS.
193			66D48441	E					66D48441P1	RETAINER, NUT - I.F.D. SHROUD				Casting 356-T6 AL alloy per QQ-A-596 Class 8, (ASTM B26 supercedes); Alternate machining process 2024-T351 AL alloy per QQ-A-250/4, (SAE AMS-QQ-A-250/4B supercedes). Machine shop should be able to produce.
203					128A5547	C			128A5547 CL 1A	PENETRANT INSPECTION OF NON-MAGNETIC	04615	04615		
204							118A1629	D		MAGNESIUM STRUCTURE CASTINGS - GENER	04615	04615		
205			MS21266						MS21266-3T	GROMMET				Lots in ILS.
206			69E48945	B					69E48945P1	BRACKET, ELECTRICAL CONNECTOR	07868	07868		2024-T3 AL alloy per QQ-A-250/4; SAE AMS-QQ-A-250/4B supercedes. Machine shop should be able to produce.
210			NAS1068						NAS1068C4, C3M, A08	PLATE, NUT				NAS1068C4, NAS1068A08, NAS1068RC3: Lots available in ILS.
211			66A50230	-					66A50230P2	NUT, SELF LOCKING PLATE, 7 LUG, 160KSI, RE	07868	07868		F19341-5DN. Lots in ILS.
212			AN3-3A							BOLT, MACHINE				Lots in ILS.
213			AN960						AN960C10L	WASHER				Lots in ILS.
214			MS20470						MS20470DD6-7, DD5-6, AD4-5, DD6-8, DD5-8, DD5-7	RIVET				All have lots in ILS.
215			MS20426						MS20426AD4-5, AD3-7, AD3-6, AD3-4, AD4-5-5, DD5-6	RIVET				MS20426AD4-5, MS20426AD3-4, MS20426AD3-7, MS20426AD3-6, MS20426AD3-4, MS20426AD4-5-5, MS20426DD5-6: All have lots in ILS.
216			68D48694	-					68D48694P1	INTERCOSTAL - STA129.65	07868	07868		2024-O AL alloy per QQ-A-250/4; SAE AMS-QQ-A-250/4B supercedes. Machine shop should be able to produce.
226			69A47538	A					69A47538P2	RECEPTACLE, STRESSED PANEL FASTNER	07868	07868		D-3050C-0. Lots in ILS.
227					69A47526	A			69A47526P52-P65	STUD, PROTRUDING HEAD, HEX SOCKET DRI	07868	07868		Available as D3012C-0-3 (only need grip length 3), but not needed on this assembly.
228					69A47537	-			69A47537P2	SNAP RING, RETAINING - STRESSED PANEL F	07868	07868		Available, but not needed for this assembly.
229			156A9747	A						Etchant for Teflon Surfaces	15226	15226		TETRA-ETCH. Lots in ILS and online.
230			TTE489						11105 CL A	ENAM, ALKYD, GLOS				TTE489 is available online and found in ILS. 11105 is Gloss OSHA Safety Red. Class A.
231			TTL0048						11136, 17038	LACQUER				11136 is Gloss Insignia Red. 17038 is Gloss Military Black. Alternate to TTE529 for 17038. Alt for TT-E-489 for 11136. Not sure if this is available since TTL48 is cancelled and TTL50 replaces. Could only find clear for TTL50. A-A-56032 would be the replacement. 17038 black and 11140 red is available. Pete approved the 11140 red.
232			MILP8585							PRMR MSTRF SENS				Some in ILS and online.
233			67A53011	B					67A53011P8-3, P8-4	PIN - PROTRUDING HEAD, 7075T6 ALUMINU	07868	07868		HS26-8-3 & HS26-8-4. Cannot currently find HS26-8-3. For HS26-8-4, there are lots in ILS. If you cannot find HS26-8-3, modify the length of HS26-8-4 to match.
234			67A60291	B					67A60291P8-3, P8-4	PIN - COUNTERSUNK HEAD, 7075T6 ALUMIN	07868	07868		HS23-8-3 & HS23-8-4. Some in ILS for both.
235			67A53012	A					67A53012P8	COLLAR, RIVET PIN, 2117-T4 ALUMINUM SPE	07868	07868		HS24-8. Lots in ILS.
236			NAS1097						NAS1097DD5-6, DD5-7	RIVET				NAS1097DD5-6 & NAS1097DD5-7. Lots in ILS for both.
237			65A5683	D					65A5683P1, P2	ADHESIVE, EPOXY POLAMIDE	07868	07868	10A1409-H	Not to be used. Replaced by MSP535148P1.
238					MSP535148	-			MSP535148P1	MATERIAL SPECIFICATION FOR CASTING RES	15228	98747	06A0609-H, 20A6634-H	Available as Scotchcast #8N for P1 and Available as Scotchcast #9N for P2 from 3M.
239			67A61392	B					67A61392P1	Trowelable Cork	07868	07868	HER1923	BMS-8-103. Some in ILS from Dynamation Research. Oscar@dynamation.com.
240			65A5684	B					65A5684P1	FUNGICIDE, PHENOL CLASS	07868	07868	HER2079	Replaced by 23039063P1
241					23039063	-			23039063P1	FUNGICIDE, PHENOL CLASS	79272	79272	ICBM17C057	EMD Chemicals CAGE 0AL61 PN 106798. 4-Nitrophenol.
242			165A4413	F					165A4413P3	POLYURETHANE FOAM, RIGID, CO2 - BLOWN	15226	15226		Stathane 818-6. Polyurethane Foam 6 lb density water blown closed cell foam. Alternate is AT-406 from Utah Foam Products. See Engineering Instructions for more information.
243					165A4414	D				POLYURETHANE FOAMS, RIGID, CO2 NLOWN	15226	15226		
244					66A50235					CARBON BLACK POWDER, MOLACCO				Carbon Black powder additive. Not needed in this assembly.
245			65A5682	D					65A5682P1CLA	RESIN BONDED CORK ABLATIVE MATERIAL	07868	07868	21A3163	Available from Amorim as P50. See EO for addition.
246					65A5683	D				ADHESIVE, EPOXY POLAMIDE	07868	07868	10A1409-H	Not to be used. Replaced by MSP535148P1. See above.
247			128A5466	K					128A5466P1	ADHESIVE , THERMOPLASTIC, SYNTHETIC RU	15226	15226		Goodyear Pliobond 20. Available from ILS and online sources.
248			MS171526							SPRING, PIN				Lots on ILS.
249			TTE529						PN 27038	ENAM, SEMI-GLOSS				Found in ILS and online with color 27038. 27038 is Semi-Gloss Military Black.
250			68C48592	D					68C48592P1	CLOSURE, IFD-FRUSTUM 45 DEGREES	07868	07868		6061-T651 or -T6 per QQ-A-250/11. Machine shop should be able to produce.
260			68D48696	B					68D48696P1	BRACKET CONNECTOR	07868	07868		AL Alloy .063 thick sheet. 2024-T3 per QQ-A-250/4. Machine shop should be able to produce.
270			68D48693	A					68D48693P1	STIFFNER, 56' 30' FRUSTUM ASSY	07868	07868		AL Alloy .050 thk sheet 2024-0 per QQ-A-250/4. Machine shop should be able to produce.
280			69J48139	C					69J48139P1 - P8	STIFFNER AND BRACKET	07868	07868		AL Alloy 2024-0 .050 & .063 thk sheet per QQ-A-250/4. Machine shop should be able to produce.
290			67C54599	A					67C54599P1 - P3	CLIP, COMPONENT SUPPORT STRUCT	07868	07868		For P1, make from extrusion AND10141-1403, AL Alloy 2024-T4 per QQ-A-200/3. For P2&P3, make from extrusion AND10134-1005, AL Alloy 2024-T4 per QQ-A-200/3. Extrusions are available and any machine shop should be able to produce.
301			67D54699	-					67D54699P1 - P4	SPACER, PROGRAMMER-SUPPORT STRUCTUR	07868	07868		.250 AL Alloy 2024-T4 plate per QQ-A-250/4. Any machine shop should be able to produce.
312			R2232	J					R2232P8-4, P58	FASTNER - PIN AND COLLAR ONE SIDE ASSE	15226	79272		For R2232P8-4, use HL19PB-8-4 or HL19-8-4. For P58, use HL-70-8. All fasteners have lots available in ILS.
313			MS21266						MS21266-2T	GROMMET STRIP				Lots available in ILS.
314			65A5903	L					65A5903P3, P8 (IUIC)	PLATE, IDENTIFICATION, METALLIZED POLYE	07868	07868	16A0260-H, 17A0063-H	For P3, Brady B-994 or B-428 Dataplates. Found B-428 from Brady. Data sheet is available if needed.
315			165A4434	G					165A4434P1	EPOXY ADHESIVE, TWO-PART	15226	15226	ICBM10C131	Scotch-Weld EC-2216 B/A Gray. Some in ILS and available from 3M and other online sources.
316					23033588	A			23033588P1	MATERIAL SPECIFICATION FOR EPOXY, STRU	79272	79272	16A717-H	

Utah Foam Products, Inc.

AT-406

Two-component structural polyurethane foam

DESCRIPTION

AT-406, is a 6# density, two-component polyurethane water blown foam. This closed-cell, medium-density structural foam can be used for void fill, molding plaques, picture frames, architectural pieces and many more uses. Its low viscosity allows it to be hand or machine processed.

APPLICATIONS

*Void Fill

*Plaques

*Picture Frames

*Architectural Pieces

ADVANTAGES

- Quick set time
- Hydro insensitive
- Bonds with soil and concrete
- Develops hydraulic lift to level and stabilize concrete slabs and foundations
- Lower cost alternative vs replacement
- Lighter weight than mud jacking Lift can be executed to precise measures

PACKAGING

- 10 Gallon Kit (2 ea. 5 Gallon Buckets)
- 110 Gallon kit (2 ea. 55 Gallon Drums)
- 550 Gallon Kit (2 ea. 275 Gallon IBC)

TECHNICAL INFORMATION

Physical properties at 73°F (23°C) - Liquid Properties will vary depending upon site conditions, application method, mixing method and equipment, material temperature, and curing conditions.

SOLIDS CONTENT: 100%

VISCOSITY: A component 270-280 cps, B component 800-1200 centipoise

Note: Viscosity scale for Utah Foam Products: 50 and under= super low, 51-100= very low, 101-400= low, and 401-1000= moderate viscosity.

TESTING DATA

Utah Foam Products, Inc.

AT-406

Two-component structural polyurethane foam

Physical Properties - Cured	Results	Test Method
Compressive Strength	150-180 psi	ASTM D-1621
Compressive Modulus	7000-9000	ASTM D-1621
Density	6 lbs./cubic ft (=/- .25)	ASTM D-1622
Tensile Strength	180-200 psi	ASTM D-1623
Shrinkage	Negligible	ASTM D-1042
Water Absorption lbs/ft2	<0.10	ASTM D-2842
Closed Cell Content %	>90.0	ASTM D-6226
Shear Strength	110-130 psi	ASTM C-273
Flexural Strength	N/A	ASTM D-790
Shear Modulus	N/A	ASTM C-273
Flexural Modulus	N/A	ASTM D-790

Reaction Times				
Product	AT-406			
Cream Time (sec)	30-35			
Rise Time (sec)	130-140			
Tack Free Time (sec)	145-165			
90% Strength (min)	25			

DIMENSIONAL STABILITY (ASTM D-2126)	
Volume Change @ -40°F	< 2%
Volume Change @ +200°F	< 2%

DIRECTIONS FOR USE

Mixing Ratio: A:B 1:1 by volume
Material Preparation: Store material overnight to precondition to 70-80°F (21-27°C) prior to use. Pre-mix the "B" component prior to combining. "B" component contains chemicals that settle over time. Failure to properly pre-mix will result in uncured or improperly cured material. Dispense using a two-component proportioner pump with heated hoses and impingement-style gun. Call Utah Foam Products for details. *Limitations: Cold temperatures will slow down reaction time and increase viscosity. pH below 3 or above 10 may adversely affect foam properties. Adjustments for altitude density may also be required.*

Utah Foam Products, Inc.

AT-406

Two-component structural polyurethane foam

STORAGE & CLEAN UP

Storage: Store between 50 and 75F to minimize container pressure. Take care to open containers, loosen closure to relieve pressure slowly before fully opening. Shelf Life: 1 year from date of manufacture in unopened containers properly stored. Protect from moisture.
Clean Up: Clean off of skin with soap and water. To clean uncured resin from the gun, flush with acetone.

ENVIRONMENTAL PROTECTION

Cured material is environmentally safe. Dispose of in according to appropriate regulations. Clean up any spilled catalyzed liquid material and add a small amount of water to cure unreacted material.

HEALTH & SAFETY

Safety: Use OSHA-approved personal protective equipment (PPE), including safety glasses, gloves and confined space equipment/ procedures if applicable. Avoid skin contact; do not ingest. See SDS for complete safety precautions. For professional use only.

FIRST AID

Eye Contact: Immediately flush with large amounts of water. Seek medical attention.
Inhalation: Move to fresh air if symptoms occur. If breathing is difficult, seek medical attention.
Ingestion: Seek medical attention immediately.
Skin Contact: Wipe off contaminated area and wash with soap and water immediately.

MANUFACTURING

Products are manufactured by Utah Foam Products in the U.S.A. under strict quality assurance practices at our Salt Lake City, UT plant.

SHIPPING

Shipping Class: Motor Freight Class 60 Hazard
Classification: Not Hazardous

WARRANTY & DISCLAIMER

Utah Foam Products Inc. warrants its products to be free from manufacturing defects and those products meet the published characteristics when tested in accordance with ASTM and Utah Foam Products standards. No other warranties by Utah Foam Products are expressed or implied, including no warranty of merchantability or fitness for a particular purpose. Utah Foam Products will not be liable for damages of any sort resulting from any claimed breach of warranty. Utah Foam Products' liability under this warranty is limited to replacement of material or refund of sales price of the material. There are no warranties on any product that has exceeded the "shelf life" or "expiration date" printed on the package label.

3609 S 700 W, Salt Lake City, UT 84119 | 801-269-0600 | INQUIRIES@UTAHFOAM.COM | UTAHFOAM.COM

REV. AM

SHT NO. 1 ON THIS 68J52342.DWG

(2.A10) SECTION Ⓐ AM-AM (ROTATED 17°30' CCW)
SCALE: 1/1

VIEW AE-AE (1A3) ROTATED 71°15' CCW
VIEW AF-AF (1D3) ROTATED 108°45' CW
LOOKING AFT
SCALE: 1/1

CLASS	DWG NO.	SH	REV
NONE	68J52342	1	AM

13 12 11 10

D C B A

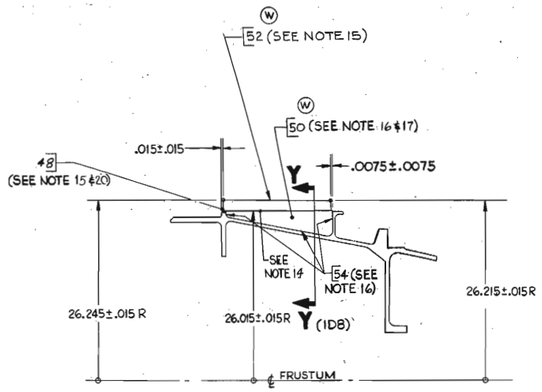

DETAIL **Z** (1D4)
SCALE 1/1

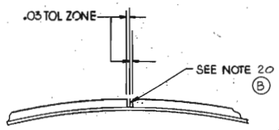

SECTION **Y-Y** (1D9)
(TYPICAL FOR ALL JOINT LINES).
SCALE: 1/1

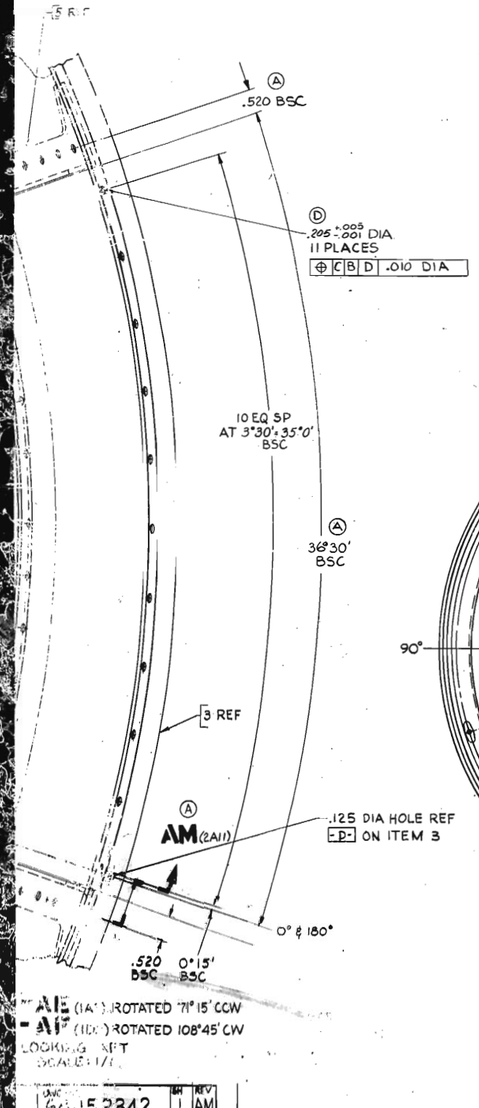

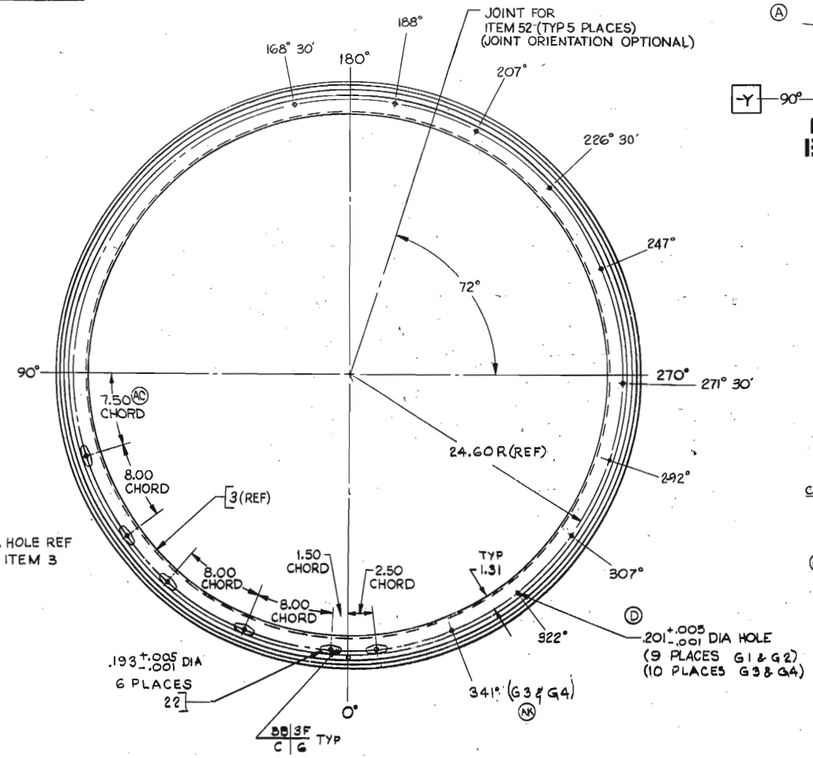

VIEW **A-A** (1A4)
SHOWING ANGULAR POSITION OF INSULATION JOINTS & LOCATION OF NUTPLATES
SCALE 1/4

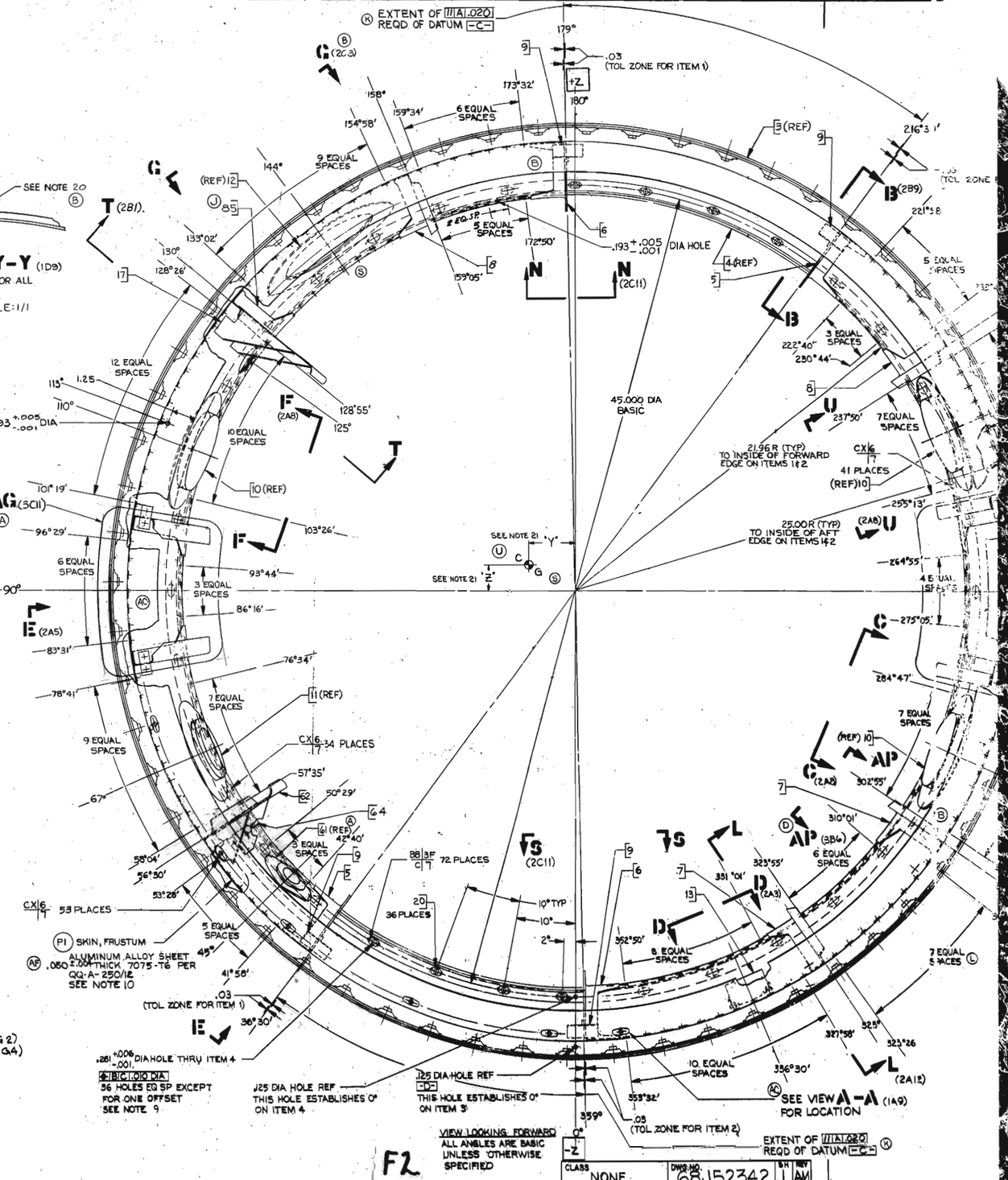

CLASS	DWG NO.	SH	REV
NONE	68J52342	1	AM

10	9	8	7	6

AL	ADDED G4			
IAB	AM	3.41" was 3.38"	AN-37	

Z	INCREASED RUNOUT TOL ON RND RING, ADDED NOTE 22, CHANGED DWG TITLE, AN-23		
AA	ADDED CAUTION NOTE FOR FUNGICIDE AN-24		
AB	DELETED NOTE 22 & ADDED CONCENTRICITY REQ AN-26		
AC	ADDED LOCATING DIM. FOR NUTPLATE AN-28		
	CHG NOTE 4 & 6, ADDED RIVET LG TO RIVET CALLOUTS AN-29 CORRECTED FORMAT OF ISSUE DATE		
AD	CHG MASS PROPERTY REQ AN31		
AE	REVISED NOTE 11 AN 32		
AF	ADDED TOL TO MATL CALLOUTS FOR P16 PZ AN-33		
AH	CHG NOTE 16, AN-34		
AJ	CHG ADHESIVE CALLOUT IN NOTE 11 AN-35		
	DO NOT USE BOTH ETCHANT & PRIMER INACTIVATED G1, IMPLEMENTED DPM ECO 4620		
AK	ADDED G3	AN36	

NOTES:
1. INTERPRETATION OF DWG TERMS & TOL. PER MIL...
2. IDENTIFICATION MARKING TO BE ADDED TO NAMEPL... MARKING INFORMATION PER GBB4845(1).
3.
4. RIVET PER 69A47546/1 & 69A47546/6.
5. THE INTERCHANGEABILITY FEATURE OF THESE HOL...
6. TORQUE FASTENERS AS FOLLOWS: #10-32 ; (0 TO 25...
7. THESE HOLES TO BE LOCATED ON AND NORMAL TO T...
8. THESE HOLES ARE PROVIDED FOR GROUND HANDLIN...
9. THE MASTER TOOLING WILL BE PROVIDED BY GENERAL E...
10. FINISH SKIN PANELS, ITEMS 1,2 AND 12 PER 84A5E 20...
11. PRIOR TO BONDING GROMMET ITEMS 15 & 33) FAYING SU... USING ADHESIVE, ITEM 25 (65A4454), ETCH BONDING... USING ETCHANT, ITEM 31. BOND GAP .00[illegible] +.005 -.[illegible]
12. ALL EQUALLY SPACED FASTENER LOCATIONS TO BE ... UNLESS OTHERWISE SPECIFIED.
14. BOND ITEM 52 (SEGMENT) TO ITEM 50 (FOAM) USING PER S0060-02-0006 WITH THE FOLLOWING EXCE... PAR 3.4.1; SUBSTITUTE "FOAM FOR "ALUMINUM" IN... ADD "AND FOAM" TO "INSULCORK 2755 IN PAR 3... OR TOTAL ADHESIVE WEIGHT TO BE 0.12 ± .08 POUNDS
15. APPLY FUNGICIDE, ITEM 49, TO EXPOSED SURFACE... PER S0060-02-0006.
16. APPLY ITEM 14 (ADHESIVE) TO ITEM 3 (INTERF... 165A4414. APPLY ITEM 50 PER 165A4414. SURFA... REPAIRED USING 65A5683 WITH 6% TO 8% F... FOAM (ITEM 50) ADDED. THE TOTAL EDGE A... SHALL NOT EXCEED 3 CUBIC INCHES FOR ANY O...
17. ITEM 50 PER 165A4413 P3 EXCEPT DENSITY PE...
19. MARK AREA INDICATED WITH PAINT, ITEM 3 OR 57 (STD 595) PRIME SURFACE BEFORE PAINTING WITH MIL-P-6808.
20. FILL GAP WITH TROWELABLE CORK, ITEM 4, APPLY P...
21. THE WEIGHT AND C.G OF THIS ASSEMBLY SHALL ... AND BE WITHIN THE FOLLOWING LIMITS:

	MAX	MIN
WEIGHT	39.05	36.21
X	3.50	3.10
Y	-.56	+.14
Z	-.16	+.38

THE MASS PROPERTY REQUIREMENTS AR... DEFINED... 'Y'(PITCH) AND 'Z'(YAW). THE 'X' AXIS IS PERPE... ON THE Ⓢ OF DATUM -B-, THE 'Z'(YAW) AXIS PAS... OF THE INDEX HOLE SHOWN AS DATUM -B- AND... 'X' AXIS. THE 'Y'(PITCH) AXIS IS MUTUALLY PER... AND THE 'Z' AXIS.

(TOP ITEM 1)
216°30'
.03 (TOL ZONE FOR ITEM 2)
221°58
5 EQUAL SPACES
233°43'
236°45'
238°19'
.03 TOL ZONE FOR ITEMS 5,6,7 & 8
CX 6/7 53 PLACES
247°
P2 SKIN, FRUSTUM
ALUMINUM ALLOY SHEET: .050 +.004 -.000 THK 7075-T6 PER QQ-A-250/12 SEE NOTE 10
BB 4N C15-5 120 PLACES
257°10'
21 60 PLACES
262°21'
INDEX HOLE
270°
+Y
277°39'
282°40'
6° TYP
292°-15'
302°26
304°
307°02'
323°26
325°
327°58'
336°30'
222°40'
230°44'
237°50'
255°13'
264°55'
275°05'
284°47'
302°55'
310°01'
323°55'
331°01'
356°30'
3 EQUAL SPACES
9 EQUAL L SPACES
7 EQUAL SPACES
4 EQUAL SPACES
6 EQUAL SPACES
8 EQUAL SPACES
21.96 R (TYP) TO INSIDE OF FORWARD EDGE ON ITEMS 1 & 2
25.00 R (TYP) TO INSIDE OF AFT EDGE ON ITEMS 1 & 2
CX 6/7 41 PLACES
(REF) 10
.125 DIA HOLE
4 (REF)
5
B (289)
B (2A8)
U (2A8)
C (2A8)
AP
C (2A8)
D (3B6)
D (2A3)
L (2A12)
SEE VIEW A-A (1A9) FOR LOCATION
SEE DETAIL AJ (3C7) A
EXTENT OF 11 AT .020 REQD OF DATUM -C- W
(ZONE FOR ITEM 1)

SEE DETAIL Z (1D9)
.562 BASIC (TYP)
B
9 (REF)
-E- B
5 (REF)
6 (REF)
4
AF (1A10)
EDGE OF ITEM 2
(REF) 8
AF
7 (REF)
45.750 DIA (AB) (REF) Z
0.100 UNRESTRAINED
S B .040 TIR
50.340 DIA (REF) -B-
0.010 RESTRAINED
0.060 UNRESTRAINED
SEE NOTE 2 8 B
SEE DETAIL AB (2A11)
.3438 +.0040 -.0000 DIA HOLE
.022 DIA 60 PLACES SEE NOTE 5
+X
-X
C G S
1.00±.06
7.81±.06
10 (REF)
AF
.375 +.007 -.000 DIA HOLE
.010 DIA 6 PLACES (22°, 34°, 88°, 100°, 196° AND 286° BASIC) SEE NOTE 8
.540 BASIC (TYP)
.075 TYP
EDGE OF ITEM NO. 1 & 2
AE
(REF) 5
(TYP) .41 (TRUE) FROM EDGE OF SKINS (ITEMS 1 & 2)
(REF) 13
AE (1A10)
6 (REF)
S U 'X' SEE NOTE 21
15.620±.020
-C- 11A.010 11A.020 SEE ZONES (1A7) & (1D6)
-A- -.010
STA 138.12 REF S
FORWARD
(1A9) A

INACTIVATED 2-19-74 → G1 G2 G3 G4 Y

DWG NO. 68J52342	SH 1	REV AM	

F3 | 68J52342 Rev. AM | Sht. 1

FINISH	SEE NOTE 10		

5 4 3 2

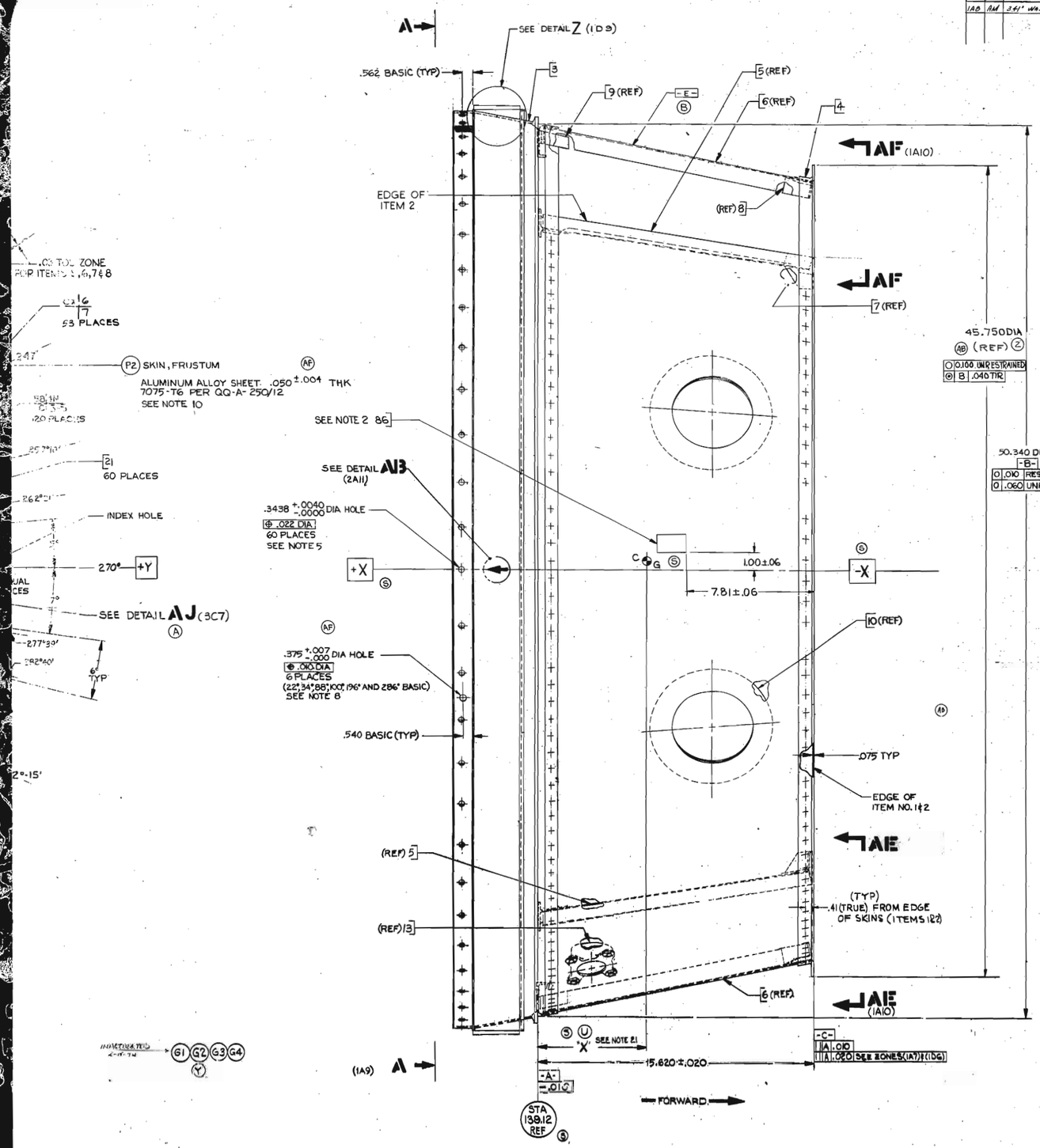

AL	ADDED G4		
1A0 AM	341" WAS 338" AN-37		

Z	INCREASED RUNOUT TOL ON FWD RING, ADDED NOTE 22, CHANGED DWG TITLE, AN-23		AS5
AA	ADDED CAUTION NOTE FOR FUNGICIDE AN-24		
AB	DELETED NOTE 22 & ADDED CONCENTRICITY REQ AN-26		AP5
AC	ADDED LOCATING DIM. FOR NUTPLATE AN-28		
	CHG NOTE 4 & 6, ADDED RIVET LG TO RIVET CALLOUTS AN-29 CORRECTED FORMAT OF ISSUE DATE		
AD	CHG MASS PROPERTY REQ AN31		
AE	REVISED NOTE 11 AN 32		
AF	ADDED TOL TO MATL CALLOUTS FOR P1 & P2 AN-33		
AH	CHG NOTE 14 AN-34		
AJ	CHG ADHESIVE CALLOUT IN NOTE 11 AN-35		
	DC DELETED REV. STRIPES PER MCR'S INACTIVATED G1, IMPLEMENTED DP MEMO 96D.		
AK	ADDED G3 AN36		

ZONE	LTR	REVISIONS DESCRIPTION	DATE	APPROVED
	A	GENERAL CHANGES AND ADDED SHEET 3 - AN-1		
	B	GENERAL CHANGES AN-2		
	D	GENERAL CHANGES AN-4		
	E	REVISED RIVET CHART BLOCK AN-5		
	F	REVISED FINISH BLOCK & DELETED NOTE 13, AN-6		
	H	ADDED LOCATING DIM. AN-7		
	J	CHG ITEM 7 TO 85 AN-8		
	K	REVISED DATUM 'C' PAR. TOL AN-9		
	L	REVISED RIVET LOCATION & DELETED TWO FASTENERS AN-10		
	R	AN FOR REWORK ONLY AN-13		
	S	CHANGED NOTE 2 & REVISED RIVET LOCATIONS AN-14		
		DELETED NOTES, ADDED MASS PROPERTY REQUIREMENTS AN-15		
	U	CHANGED MASS PROPERTY REQUIREMENTS IN NOTE 21, AN-19, CHANGED LETTERS IN TABULATION OF NOTE 21 & IN F/D		
	W	REVISED NOTES 14 & 20 AND ITEM 30 & 52 CALLOUTS WERE P30 & P52, AN-22		
	Y	ADDED G2.		

NOTES:
1. INTERPRETATION OF DWG TERMS & TOL PER MIL-D-70327 (118A1664).
2. IDENTIFICATION MARKING TO BE ADDED TO NAMEPLATE PER MIL-STD-130 (118A1526 CLASS 1).
   MARKING INFORMATION PER 68B48450.
3.
4. RIVET PER 69A47546/1 & 69A47546/2.
5. THE INTERCHANGEABILITY FEATURE OF THESE HOLES IS CONTROLLED BY BOEING MASTER TOOL.
6. TORQUE FASTENERS AS FOLLOWS: #10-32: .0 TO 25 IN LB.
7. THESE HOLES TO BE LOCATED ON AND NORMAL TO THE CONICAL SURFACE.
8. THESE HOLES ARE PROVIDED FOR GROUND HANDLING AND TRANSPORTATION ONLY.
9. THE MASTER TOOLING WILL BE PROVIDED BY GENERAL ELECTRIC CO.
10. FINISH SKIN PANELS, ITEMS 1, 2 AND 12 PER 64A51300F2005 (ALL SURFACES).
11. PRIOR TO BONDING GROMMET ITEMS 15 & 83 TO FAYING SURFACES OF ACCESS HOLE & LONGERON USING ADHESIVE, ITEM 35 (65A4434), ETCH BONDING. SURFACE OF GROMMET, ITEMS 15 & 83 USING ETCHANT, ITEM 31. BOND GAP .000"-.005".
12. ALL EQUALLY SPACED FASTENER LOCATIONS TO BE WITHIN ±.03 NONCUMULATIVE, UNLESS OTHERWISE SPECIFIED.
14. BOND ITEM 52 (SEGMENT) TO ITEM 50 (FOAM) USING ITEMS 45 AND 46 PER S0060-02-0006 WITH THE FOLLOWING EXCEPTIONS: DELETE PAR 3.2.3, 3.3.3 (b) & PAR 3.4.1; SUBSTITUTE "FOAM FOR "ALUMINUM" IN PAR 3.5.4 AND 3.5.5; ADD "AND FOAM" TO "INSULCORK 2755" IN PAR 3.4.2. BOND GAP .008 ± .002. OR TOTAL ADHESIVE WEIGHT TO BE 0.12 ±.03 POUNDS.
15. APPLY FUNGICIDE, ITEM 49, TO EXPOSED SURFACE OF ITEM 52 AND 48 PER S0060-02-0006.
16. APPLY ITEM 14 (ADHESIVE) TO ITEM 3 (INTERFACE RING) WHERE SHOWN PER 165A4414. APPLY ITEM 50 PER 165A4414. SURFACE & EDGE VOIDS MAY BE REPAIRED USING 65A5683 WITH 4% TO 8% BY WEIGHT OF GROUND CURED FOAM (ITEM 50) ADDED. THE TOTAL EDGE AND SURFACE VOIDS TO BE REPAIRED SHALL NOT EXCEED 3 CUBIC INCHES FOR ANY ONE RING OF ITEM 50.
17. ITEM 50 PER 165A4413 P3 EXCEPT DENSITY PER PARA 3.5 TO BE 10 ± 2.0 LB/FT³.
19. MARK AREA INDICATED WITH PAINT, ITEM 33 OR 57 (1.0 TO 1.5 MIL THICK) (COLOR PER FED STD 595) PRIME SURFACE BEFORE PAINTING WITH ZINC CHROMATE PRIMER, ITEM 34, PER MIL-P-6808.
20. FILL GAP WITH TROWELABLE CORK, ITEM 48. APPLY PER 65A5685.
21. THE WEIGHT AND C.G OF THIS ASSEMBLY SHALL BE MEASURED PER SPEC GTA5575 AND BE WITHIN THE FOLLOWING LIMITS:

	MAX	MIN
WEIGHT	39.05	36.21
X	3.50	3.10
Y	-.56	+.14
Z	-.16	+.08

THE MASS PROPERTY REQUIREMENTS ARE DEFINED USING THREE AXES 'X' (ROLL), 'Y' (PITCH) AND "Z" (YAW). THE 'X' AXIS IS PERPENDICULAR TO DATUM -A- AND ON THE ℄ OF DATUM -B-. THE 'Z' (YAW) AXIS PASSES THROUGH THE CENTER OF THE INDEX HOLE SHOWN AS DATUM -D- AND IS PERPENDICULAR TO THE 'X' AXIS. THE 'Y' (PITCH) AXIS IS MUTUALLY PERPENDICULAR TO THE "X" AXIS AND THE 'Z' AXIS.

CAUTION
FUNGICIDE IS A SKIN AND RESPIRATORY IRRITANT. HANDLE IN WELL VENTILATED AREAS. ANY CONTACT WITH SKIN SHOULD BE IMMEDIATELY WASHED WITH WATER.

F4

SEE SEPARATE PL & CS

U.S. AIR FORCE
CONTRACT NO. AF04(694)-725

SUPPORT, FRUSTUM - MXU-595/A

CODE IDENT NO.	SIZE	68J02342
07868	J	

SCALE 1/4 | WEIGHT LBS | SHEET 1 OF 3

NAS 333 RIVET CODE

BASIC CODE	BASIC NO. FOR DIA., SHAPE, HEAD WEAR SIDE	SUFFIX NO. FOR HEAD PAR SIDE
04 SIMPLE FIGURE NO. OF SHEETS TO BE USED, MARKING	BASIC NO. FOR LENGTH	MATERIAL SYMBOL OPTIONAL

BASIC CODES

CRM1824DD	8H67A60291 E	
BHM8824AD	67A52012	
MCMNAS1097DD	CY4M8824DD	
FE8M8824011 E		
67A52012		
KL-R2282		
BY-M8824AD		

UNLESS OTHERWISE SPECIFIED DIMENSIONS ARE IN INCHES
TOLERANCES ON FRACTIONS ± ; DECIMALS .XX ± .03 .XXX ± .010 ANGLES ± 30'
MATERIAL
TREATMENT
FINISH
SEE NOTE 10

ADDITIONAL CODES IDENT NO.

MATL
ORIG
DESIGN
STRESS
DR
CHK
ENGR APPR
PROJ ENGR
PROJ MGR
ISSUED

DWG MFG 68J02342 (1 MAY)

DWG. NO. 68J52342 SHEETS ON THIS REV. AL

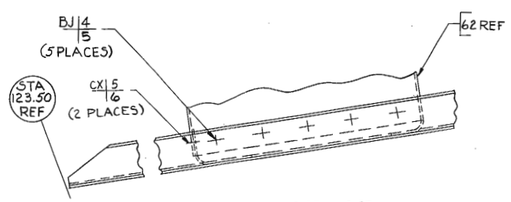

VIEW **AD-AD** (2B5)
SCALE 1/1

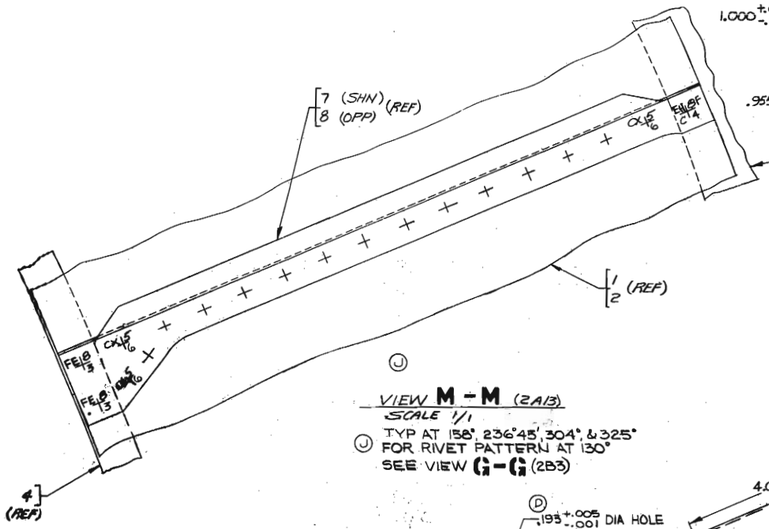

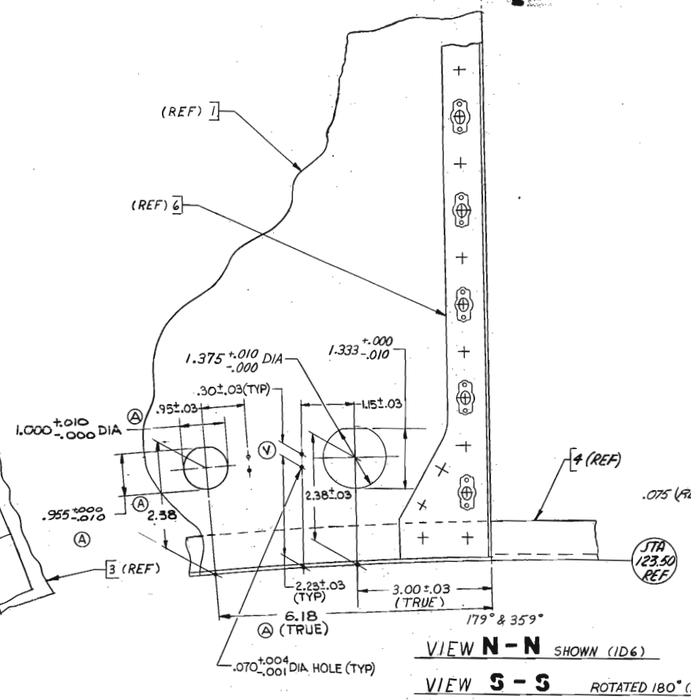

VIEW **N-N** SHOWN (1D6)

VIEW **S-S** ROTATED 180° (1B6)

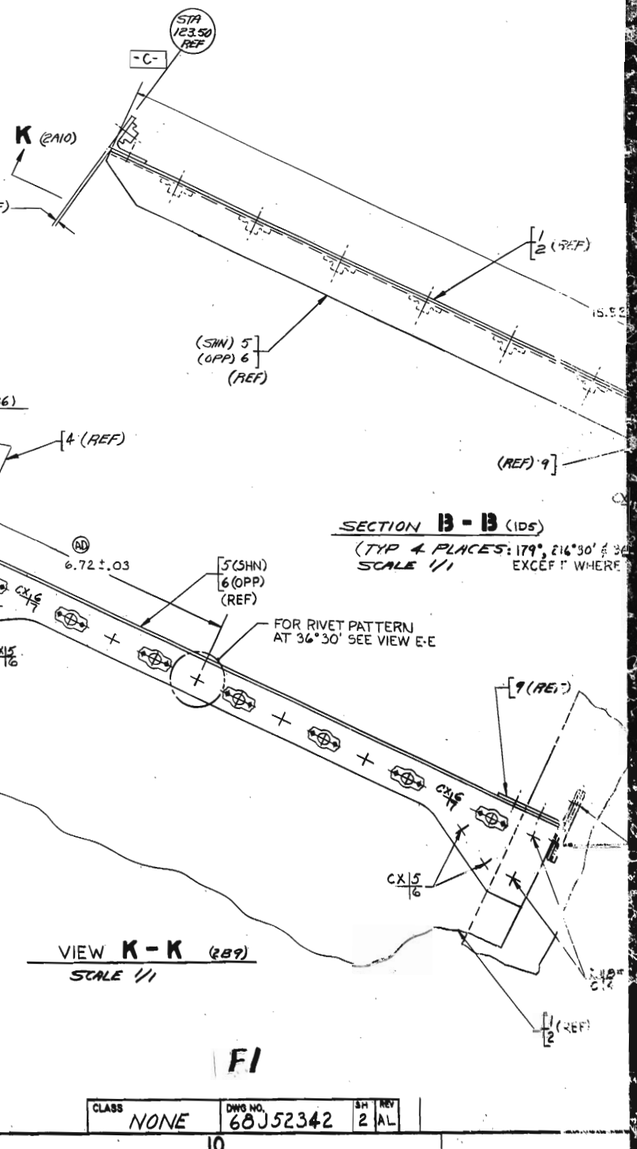

SECTION **B-B** (1D5)
(TYP 4 PLACES: 179°, 216°30' & 3
SCALE 1/1 EXCEPT WHERE

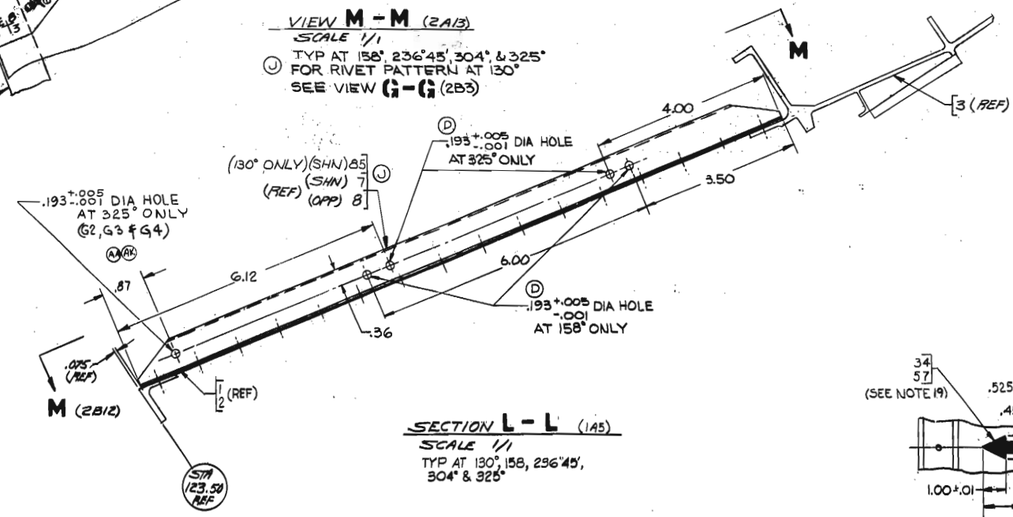

VIEW **M-M** (2A13)
SCALE 1/1
J TYP AT 158°, 236°45', 304°, & 325° FOR RIVET PATTERN AT 130° SEE VIEW **G-G** (2B3)

M (2B12)

SECTION **L-L** (1A5)
SCALE 1/1
TYP AT 130°, 158, 236°45', 304° & 325°

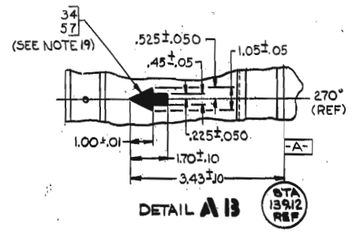

DETAIL **AB**

VIEW **K-K** (2B9)
SCALE 1/1

F1

CLASS	DWG NO.	SH	REV
NONE	68J52342	2	AL

13 12 11 10

K E5 FH D FH E5 K

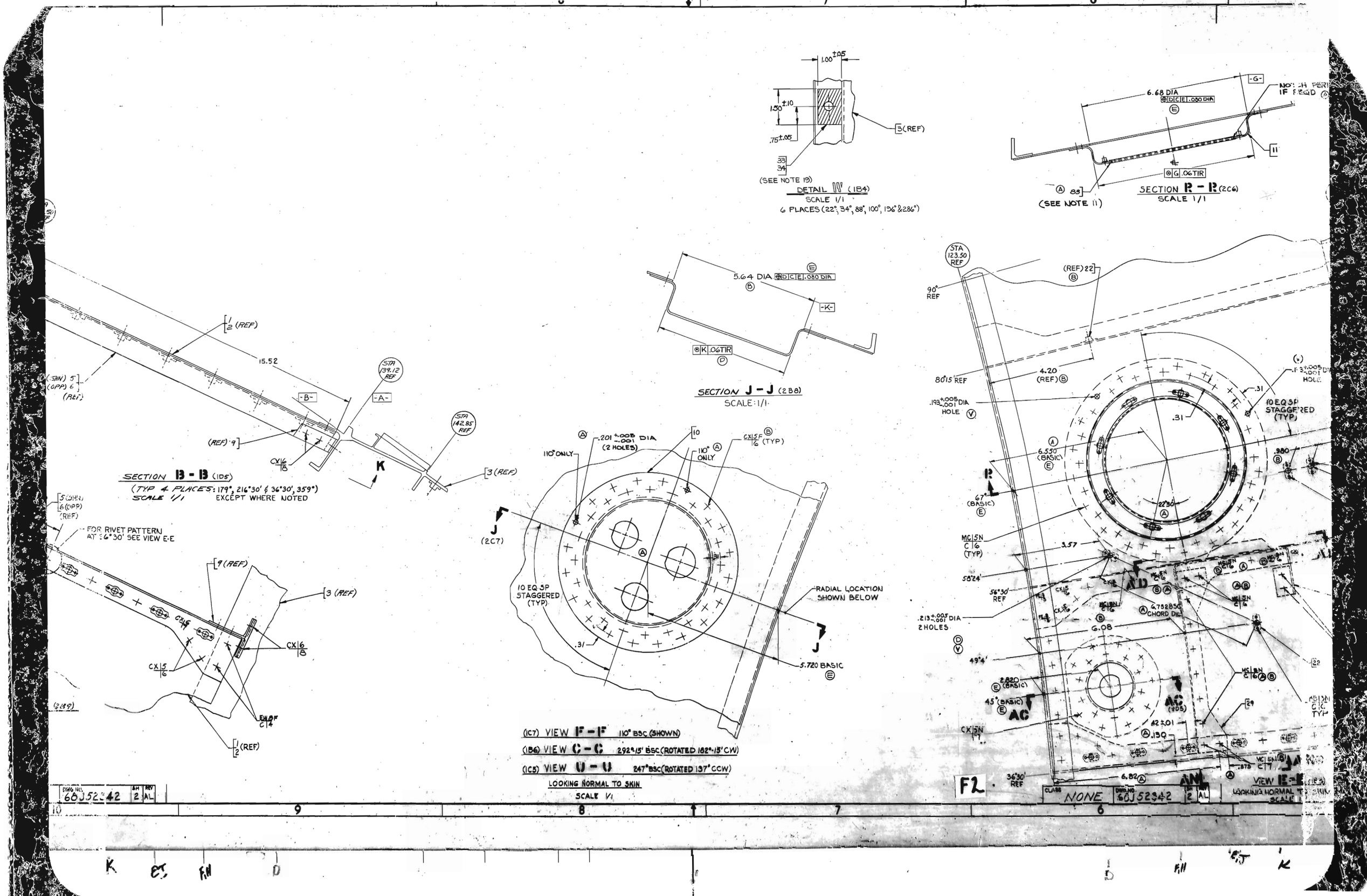

DETAIL W (1B4)
SCALE 1/1
6 PLACES (22°, 34°, 88°, 100°, 196° & 286°)
(SEE NOTE 19)
SECTION R - R (2C6)
SCALE 1/1
(SEE NOTE 11)
SECTION J - J (2B8)
SCALE: 1/1
SECTION B - B (1D5)
(TYP 4 PLACES: 179°, 216°30' & 36°30', 359°)
SCALE 1/1 EXCEPT WHERE NOTED
FOR RIVET PATTERN AT 36°30' SEE VIEW E-E
(1C7) VIEW F - F 110° BSC (SHOWN)
(1B6) VIEW C - C 292°15' BSC (ROTATED 182°15' CW)
(1C5) VIEW U - U 247° BSC (ROTATED 137° CCW)
LOOKING NORMAL TO SKIN
SCALE 1/1
RADIAL LOCATION SHOWN BELOW
10 EQ SP STAGGERED (TYP)
F2
NONE

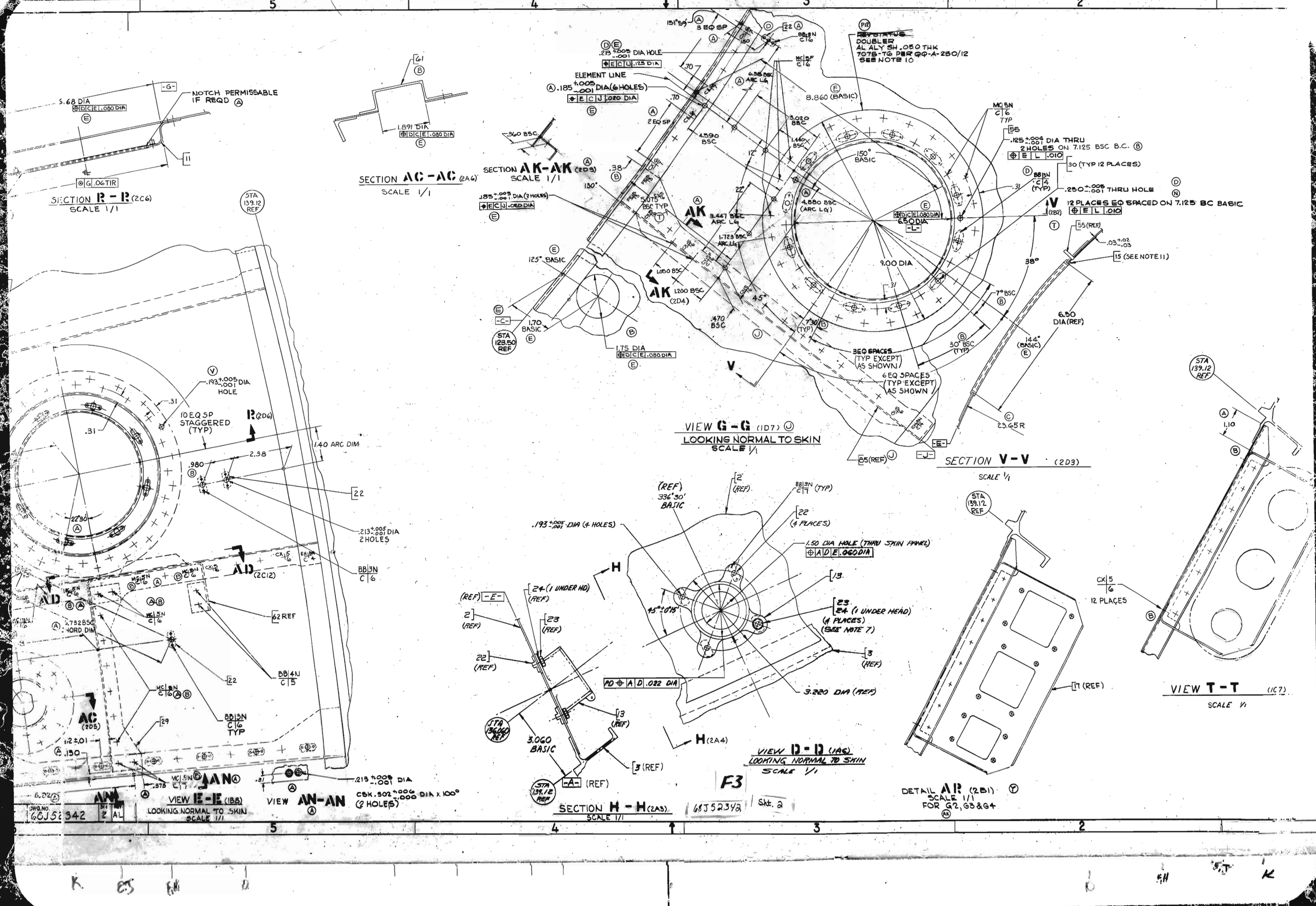

SECTION R - R (2C6)
SCALE 1/1
NOTCH PERMISSABLE IF REQD
SECTION AC - AC (2A6)
SCALE 1/1
SECTION AK-AK (2D3)
SCALE 1/1
VIEW G - G (1D7)
LOOKING NORMAL TO SKIN
SCALE 1/1
SECTION V - V (2D3)
SCALE 1/1
VIEW E - E (1B8)
LOOKING NORMAL TO SKIN
SCALE 1/1
VIEW AN-AN
VIEW D - D (1A6)
LOOKING NORMAL TO SKIN
SCALE 1/1
SECTION H - H (2A3)
SCALE 1/1
VIEW T - T (1C7)
SCALE 1/1
DETAIL AR (2B1)
SCALE 1/1
FOR G2, G3 & G4
DOUBLER
AL ALY SH .050 THK
7075-T6 PER QQ-A-250/12
SEE NOTE 10
ELEMENT LINE
10 EQ SP STAGGERED (TYP)
1.40 ARC DIM
3 EQ SPACES (TYP EXCEPT AS SHOWN)
6 EQ SPACES (TYP EXCEPT AS SHOWN)
12 PLACES EQ SPACED ON 7.125 BC BASIC
1.50 DIA HOLE (THRU SKIN PANEL)
3.220 DIA (REF)
3.060 BASIC
F3
68J52342
Sht. 2

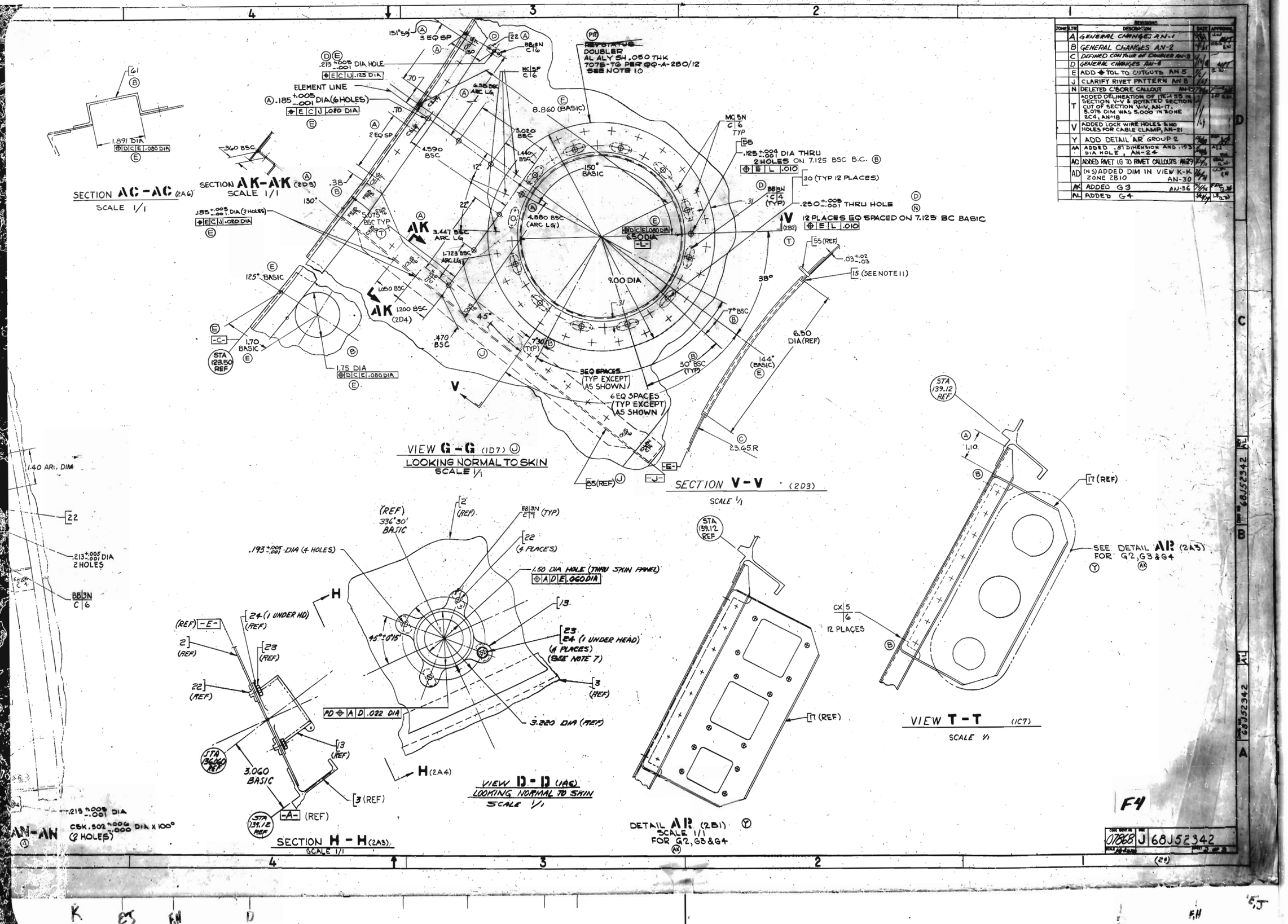

REVISIONS
ZONE LTR DESCRIPTION DATE APPROVAL
A GENERAL CHANGES AN-1
B GENERAL CHANGES AN-2
C DEFINED CONTOUR OF DOUBLER AN-3
D GENERAL CHANGES AN-4
E ADD ⌖ TOL TO CUTOUTS AN 5
J CLARIFY RIVET PATTERN AN 8
N DELETED C'BORE CALLOUT AN-13
T ADDED DELINEATION OF ITEM 55 IN SECTION V-V & ROTATED SECTION CUT OF SECTION V-V, AN-17. 5.075 DIM WAS 5.000 IN ZONE 2C4, AN-18
V ADDED LOCK WIRE HOLES & NO HOLES FOR CABLE CLAMP, AN-21
Y ADD DETAIL AR GROUP 2
AA ADDED .87 DIMENSION AND .193 DIA HOLE, AN-24
AC ADDED RIVET LG TO RIVET CALLOUTS AN-29
AD (N S) ADDED DIM IN VIEW K-K ZONE 2B10 AN-30
AK ADDED G3 AN-36
AL ADDED G4
SECTION AC-AC (2A6)
SCALE 1/1
SECTION AK-AK (2D5)
SCALE 1/1
VIEW G-G (1D7)
LOOKING NORMAL TO SKIN
SCALE 1/1
SECTION V-V (2D3)
SCALE 1/1
VIEW T-T (1C7)
SCALE 1/1
VIEW D-D (1A6)
LOOKING NORMAL TO SKIN
SCALE 1/1
SECTION H-H (2A3)
SCALE 1/1
DETAIL AR (2B1)
SCALE 1/1
FOR G2, G3 & G4
AN-AN
F4
07868 J 68J52342

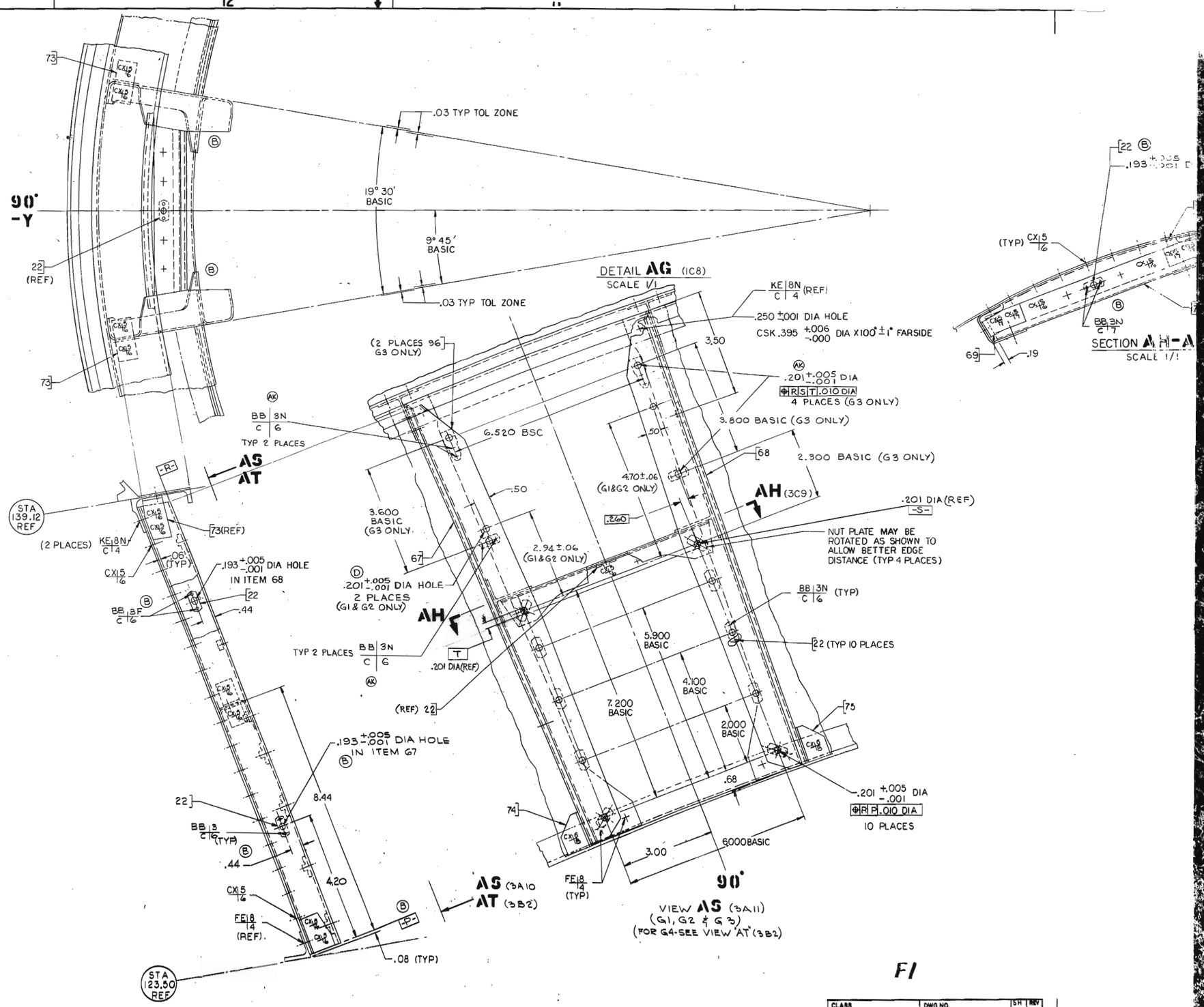

F1

CLASS	DWG.NO.	SH	REV
NONE	68J52342	3	AL

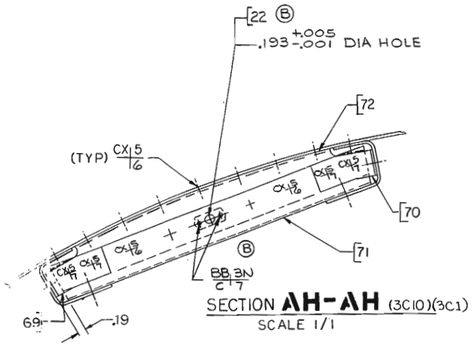

SECTION **AH-AH** (3C10)(3C1)
SCALE 1/1

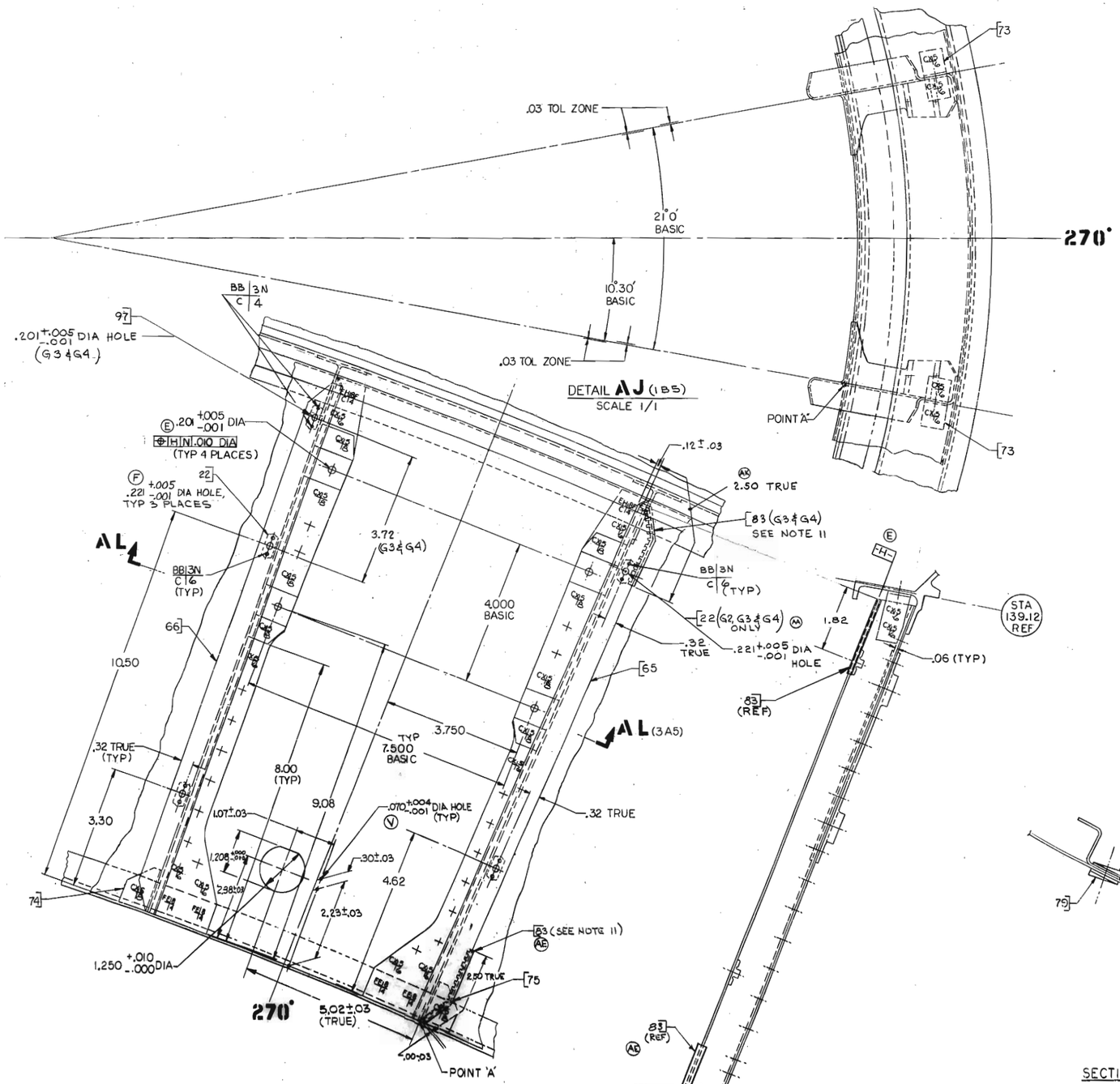

DETAIL **AJ** (1B5)
SCALE 1/1

SECTION **AL-AL** (3B7)
SCALE 1/1

F2

270°

STA 58.12 REF

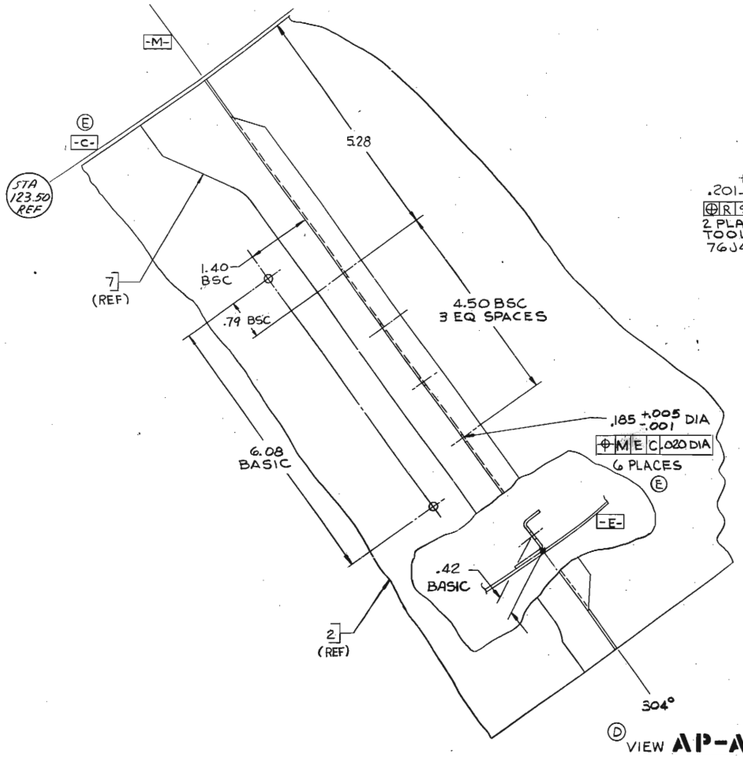

D VIEW **AP-AP** (1A5)
LOOKING NORMAL TO SKIN
SCALE 1/1

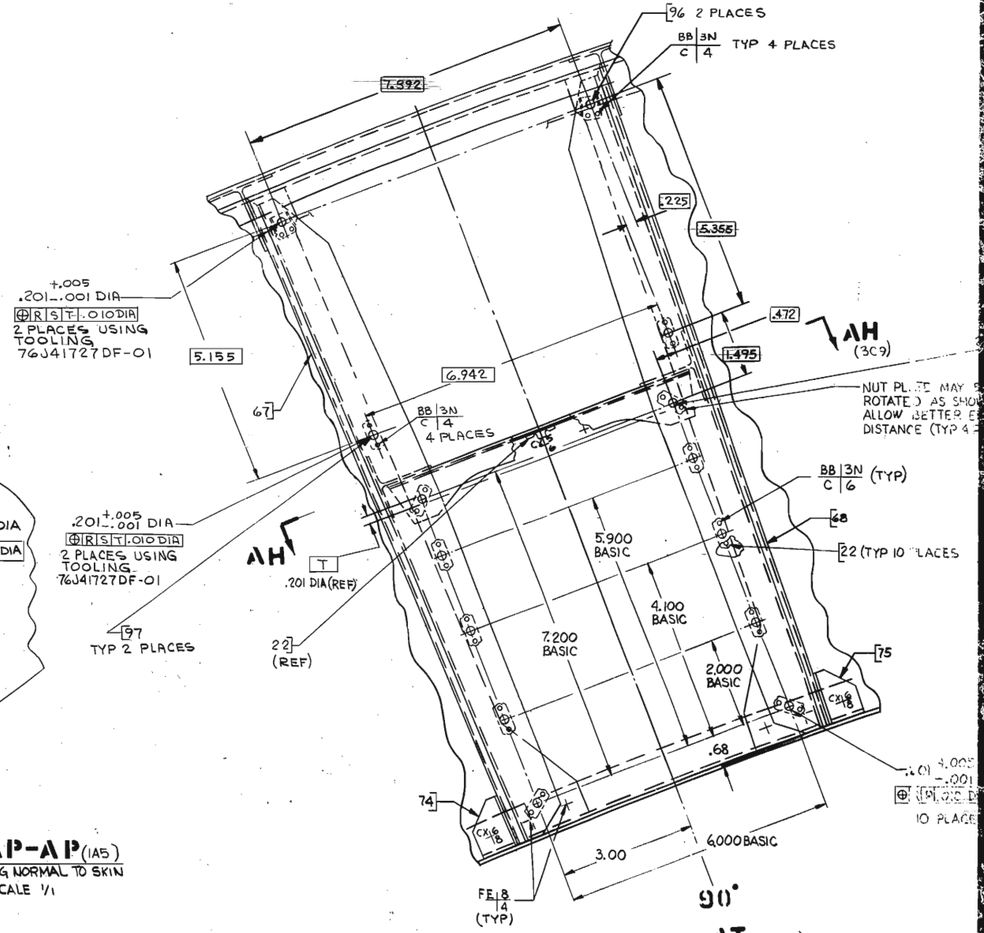

VIEW **AT** (3A11)
(G4 ONLY)

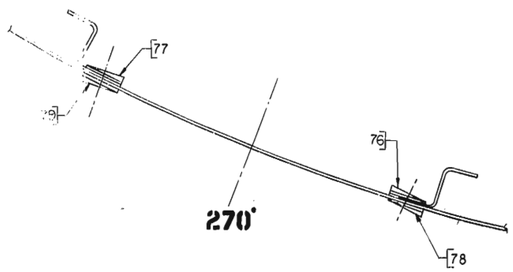

SECTION **AL-AL** (3B7)
SCALE 1/1

DWG NO. 68J52342 SH 3 REV AL

68J52342
F3 Sht. 3

K ES FH D FH ET K

ZONE	LTR	REVISIONS DESCRIPTION	DATE	APPD
	A	ADDED SHEET 3		
	B	GENERAL CHANGES AN-2		
	D	GENERAL CHANGES AN-4		
	E	CHG DATUMS, AN-5		
	F	ADDED HOLE SIZE, AN-6		
	V	ADDED LOCKWIRE HOLE & LOCATING DIM IN ZONE 3A8, AN-21		
	AA	ADDED NUT PLATE & DIM 1.52, AN-24		
	AC	ADDED RIVET LG TO RIVET CALLOUTS AN-29		
	AE	ADDED ITEM 83 AN 32		
	AK	ADDED G3 AN 36		
	AL	ADDED G4		

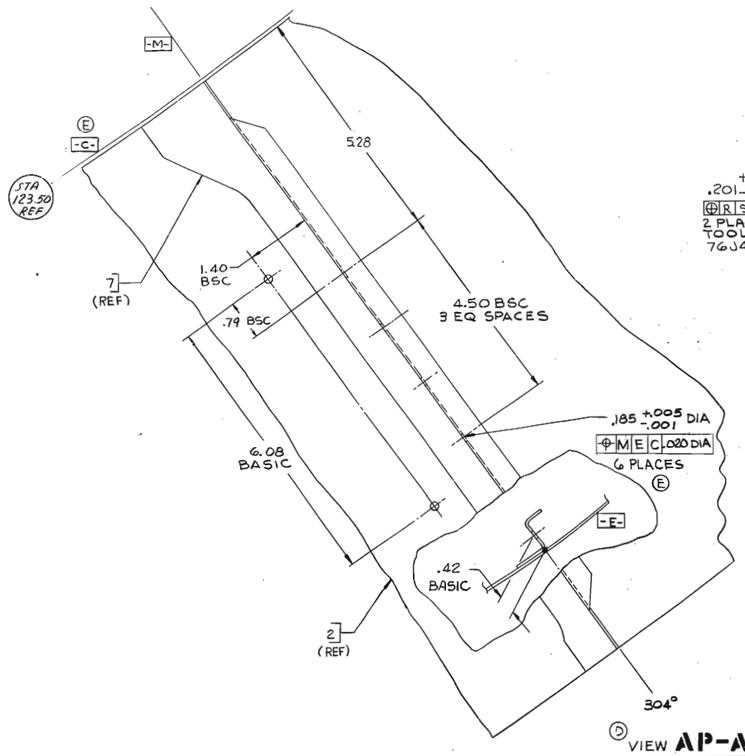

Ⓓ VIEW **AP-AP** (1A5)
LOOKING NORMAL TO SKIN
SCALE 1/1

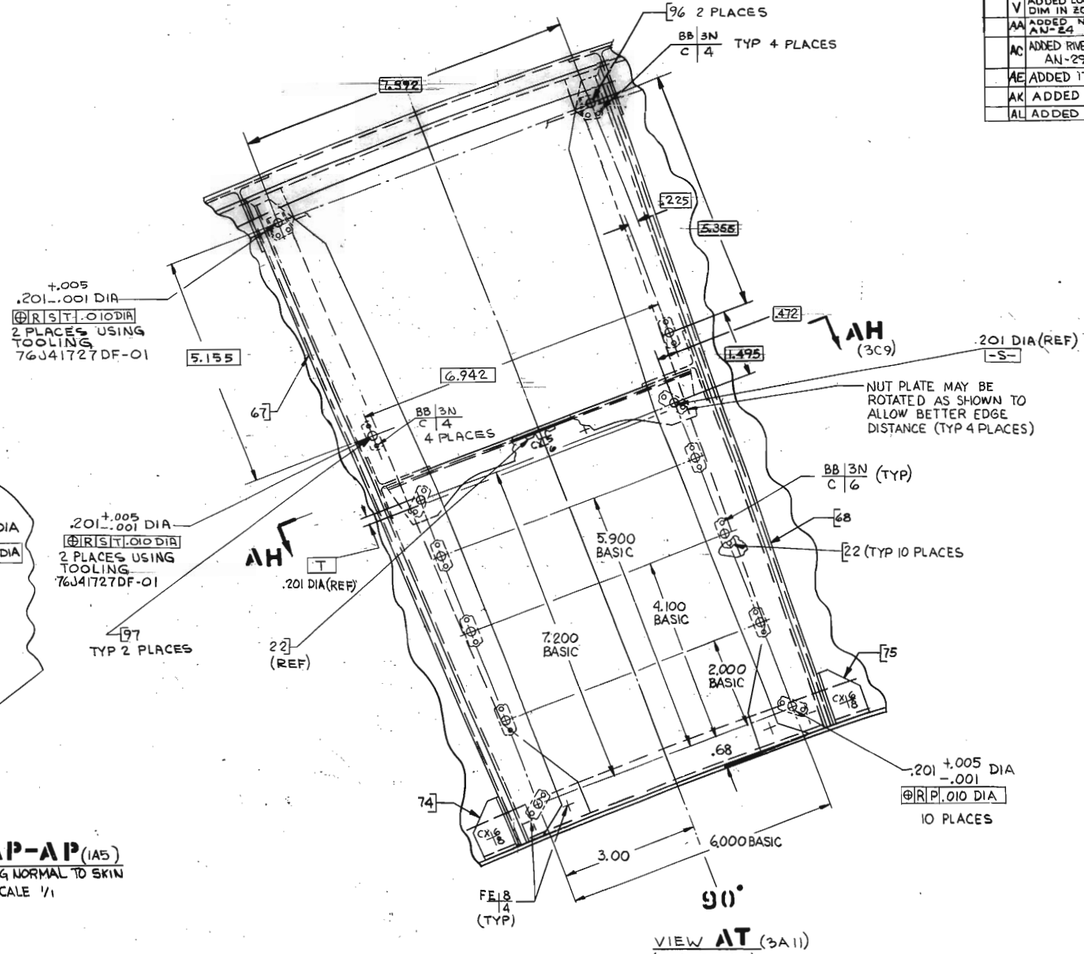

VIEW **AT** (3A11)
(G4 ONLY)

F4

CAGE IDENT NO	REV
07868	J

68J52342

SCALE 1/1 SHEET 3 OF 3

68J52342 B
68J52342 A

SPECIAL PACKAGING INSTRUCTION

CODE ID	SPI NO. (TPO)
98747	F00-435-1313
	SHEET 1 OF 6

PART OR DRAWING NO.	NATIONAL STOCK NO.	CURRENT REV
68J52342G2	1420-00-435-1313 AH	B

ITEM NOMENCLATURE
SUPPORT ASSEMBLY FRUSTUM

ORIGINAL DATE 70076

ILL. K. KNIGHTON
P.S. N. CORONADO
CHK. M. MERRILL
AUTH. G. HOENIKE

MILITARY PRESERVATION IAW MIL-STD-2073

SERVICEABLE METHOD: 10
UNSERVICEABLE METHOD: 10
QUP 001
ICQ 000
CLEANING & DRYING: IAW MIL-STD-2073
PRESERVATIVE: N/A

MARKING IAW MIL-STD-129

SPECIAL MARKINGS:
A) SPI NO. F00-435-1313
MARK THE SPI NUMBER ON THE IDENTIFICATION SIDE OF CONTAINER.
B) REUSABLE CONTAINER & DUNNAGE DO NOT DESTROY.
C) TO OPEN: REMOVE LAG BOLTS AND LIFT ENTIRE SUPER-STRUCTURE FROM THE BASE USING D-RINGS.
D) CAUTION: LIFT BY BASE ONLY

CLOSURE

LEVEL A: IAW: ASTM D6256
LEVEL B: IAW: ASTM D6256

PACKING AS SPECIFIED BELOW AND BILL OF MATERIALS

LEVEL	SPEC	STYLE	TYPE	CL	VRTY	GR	TR
A	ASTM D6256 (MOD)	A	I	2			B
B	ASTM D6256 (MOD)	A	I	2			A

	LEVEL A	LEVEL B
GROSS CU FT	74.285	74.285
GROSS WT LBS	367	367
DESIGN FRAGILITY G	110	110

	LENGTH	WIDTH	DEPTH
CNTR I.D.			
LEVEL A:	63 1/2	56 1/2	27 1/2
LEVEL B:	63 1/2	56 1/2	27 1/2
CNTR O.D.			
LEVEL A:	65 1/2	58 1/2	33 1/2
LEVEL B:	65 1/2	58 1/2	33 1/2
ITEM DIM	51 1/2	51 1/2	21
ITEM WT.	272 LBS		

REVISIONS		
LTR	DESCRIPTION	DATE
B	REVISED PACKAGING, UPDATED SPECIFICATIONS & ILLUSTRATION, ADDED WOOD STATEMENT	11297

P/N	QTY REQD	NOMENCLATURE OR DESCRIPTION	SIZE: (INCHES UNLESS SPECIFIED) TOLERANCES ON FRAC. ± 1/8, DECIMAL ± .10, ANGLES ± 1°	MATERIAL SPECIFICATION
-15	1	DUST COVER	AS REQUIRED	A-A-3174 TYPE I, CL. 1, GR. A, FIN. 1 D
-14	4	VERTICAL JOIST SUPPORTS	2 X 4 (NOM) X 24	ASTM D6199 CLASS 2
-13	8	HORIZONTAL JOIST SUPPORTS	2 X 4 (NOM) X 6	ASTM D6199 CLASS 2
-12	4	CUSHIONING PADS	9 X 5 X 1/2	A-A-59135 CLASS 1, GRADE A B
-11	8	TORQUE WASHERS	3/8	LOCAL PURCHASE 1 D
-10	8	BOLTS, CARRIAGE	5 X 3/8	ASME B18.21.1 D
-9	4	BLOCKING	3 X 4 (NOM) X 9	ASTM D6199 CLASS 2 A B
-8	4	BLOCKING	2 X 6 (NOM) X 9	ASTM D6199 CLASS 2 B
-7	14	NUTS, HEX	3/8	FF-N-836 TYPE II, STYLE 4, PLAIN D
-6	14	WASHERS, PLAIN	3/8	ASME B18.21.1 D
-5	6	BOLTS, CARRIAGE	6 X 3/8	ASME B18.5 D
-4	2	HEADERS	2 X 4 (NOM) X 56 1/2	ASTM D6199 CLASS 2 C
-3	1	FLOORING	63 1/2 X 56 1/2 X 1/2	A-A-55057 TYPE A C
-2	3	SKIDS	4 X 4 (NOM) X 65 1/2	ASTM D6199 CLASS 2 C
-1	1	EXTERIOR CONTAINER	63 1/2 X 56 1/2 X 27 1/2 (ID)	ASTM D6256 STYLE A, TYPE I, CL. 2, TR. A

SPI NO. F00-435-1313

SPECIAL PACKAGING INSTRUCTION	CODE ID 98747	SPI NO. (TPO) F00-435-1313
ITEM NOMENCLATURE SUPPORT ASSEMBLY FRUSTUM		SHEET 2 OF 6

P/N	QTY REQD	NOMENCLATURE OR DESCRIPTION	SIZE: (INCHES UNLESS SPECIFIED) TOLERANCES ON FRAC. ± 1/8, DECIMAL ± .10, ANGLES ± 1°	MATERIAL SPECIFICATION
-23	20	BOLTS, LAG	2 1/2 X 1/4	ASME B18.2.1
-22	20	WASHERS, PLAIN	1/4	ASME B18.21.1
-21	8	NUTS, HEX	1/4	ASME B18.6.3
-20	8	WASHERS, PLAIN	1/4	ASME B18.21.1
-19	8	MACHINE SCREWS	1 1/4 X 1/4	ASME B18.6.3
-18	4	D-RINGS	2 3/4 X 2 X 1/4	5365-01-551-8705
-17	2	JOISTS	2 X 4 (NOM) X 56 1/2	ASTM D6199 CLASS 2
-16	1	PAD, TOP	63 X 56 X 1	A-A-59136 CLASS 1, GRADE A

CAUTION NOTICES

NOTICE 1: ASSETS PACKAGED IN ACCORDANCE WITH PREVIOUS EDITIONS OF THIS SPI DO NOT REQUIRE REPACKAGING IF THE INTEGRITY OF THE SPI IS MAINTAINED.

NOTICE 2: OTHER NSNs MAY BE ASSIGNED TO THIS SPI BUT MAY NOT BE SHOWN ON THE SPI.

NOTICE 3: PACKAGING MATERIAL MAY BE SUBSTITUTED IF IT MEETS THE REQUIREMENTS OF MIL-STD-2073, PROVIDES EQUAL OR BETTER PROTECTION AND THERE IS NO INCREASED COST TO THE GOVERNMENT.

NOTICE 4: OVERSEAS AND FMS PACKAGING MUST MEET THE REQUIREMENTS OF LEVEL A PACKAGING.

INTERNATIONAL STANDARDS FOR PHYTOSANITARY MEASURES
REVISION OF ISPM NO. 15
REVISION OF WOOD PACKAGING MATERIAL FOR INTERNATIONAL TRADE

THE FOLLOWING STATEMENT IS IN COMPLIANCE WITH THE UNITED NATIONS-IMPLEMENTED RESTRICTIONS ON WOOD PACKAGING MATERIAL (WPM). THIS REQUIREMENT IS SPECIFICALLY CONCERNED WITH INVASIVE SPECIES SUCH AS THE PINEWOOD NEMATODE. WPM IS DEFINED AS WOOD PALLETS, SKIDS, LOAD BOARDS, PALLET COLLARS, WOODEN BOXES, REELS, DUNNAGE, CRATES, FRAMES, AND CLEATS. THE STATEMENT BELOW CITES THE REQUIREMENTS IN DETAIL AND COVERS LUMBER FOR BUILDING CONTAINERS AND PALLETS USED FOR DELIVERIES, RESULTING IN SHIPMENTS WORLDWIDE (DIRECT, OR THROUGH AIR LOGISTICS CENTERS (ALC), CONTAINER CONSOLIDATION POINTS (CCP), OR OTHER BASES).

WOODEN LUMBER, WOODEN PALLET AND PACKAGING/CONTAINER STATEMENT:

ALL WOODEN LUMBER, WOODEN PALLETS, AND WOODEN CONTAINERS PRODUCED ENTIRELY OR IN PART OF WOOD PACKAGING MATERIAL (WPM) SHALL BE CONSTRUCTED FROM DEBARKED WOOD IN ADDITION TO THE APPLICATION OF HEAT-TREATED (HT) MATERIAL (HT TO 56 DEGREES CENTIGRADE OR 133 DEGREES FAHRENHEIT FOR 30 MINUTES). CERTIFICATION/MARKING IS REQUIRED BY AN ACCREDITED AGENCY RECOGNIZED BY THE AMERICAN LUMBER STANDARDS COMMITTEE (ALSC). FOR REFERENCE DOCUMENTATION, SEE LATEST REVISION OF "INTERNATIONAL STANDARDS FOR PHYTOSANITARY MEASURES (ISPM NO. 15), "REGULATION OF WOOD PACKAGING MATERIAL IN INTERNATIONAL TRADE."

NOTES

1. CENTER ITEM ON CUSHIONED BLOCKING, REF.-8, -9 & -12, ALSO CENTERING ON BASE, AS SHOWN IN DETAIL C. DRILL HOLES IN BLOCKING AND INSERT 2 BOLTS, REF.-10, AND TORQUE WASHERS, REF.-11.

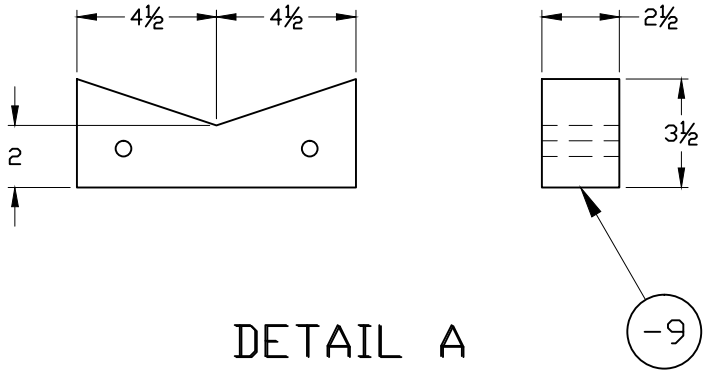

DETAIL A

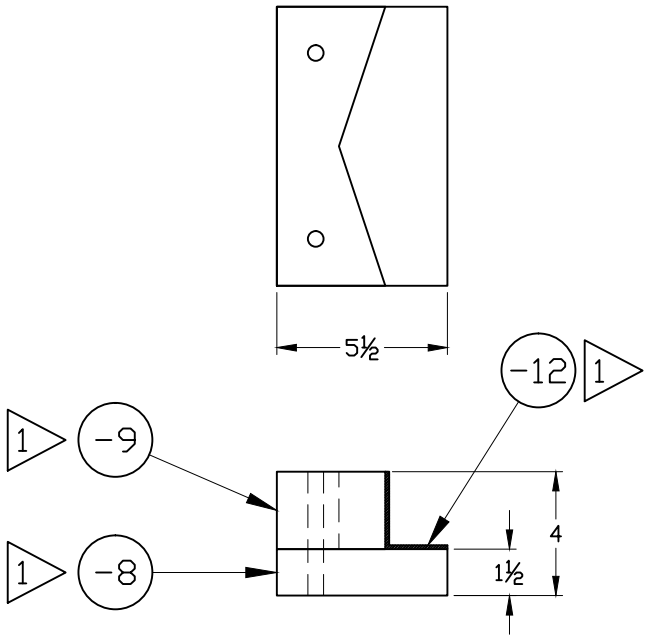

DETAIL B

SPECIAL PACKAGING INSTRUCTION	CODE ID 98747	SPI NO. (TPO) F00-435-1313
ITEM NOMENCLATURE SUPPORT ASSEMBLY FRUSTUM		SHEET 5 OF 6

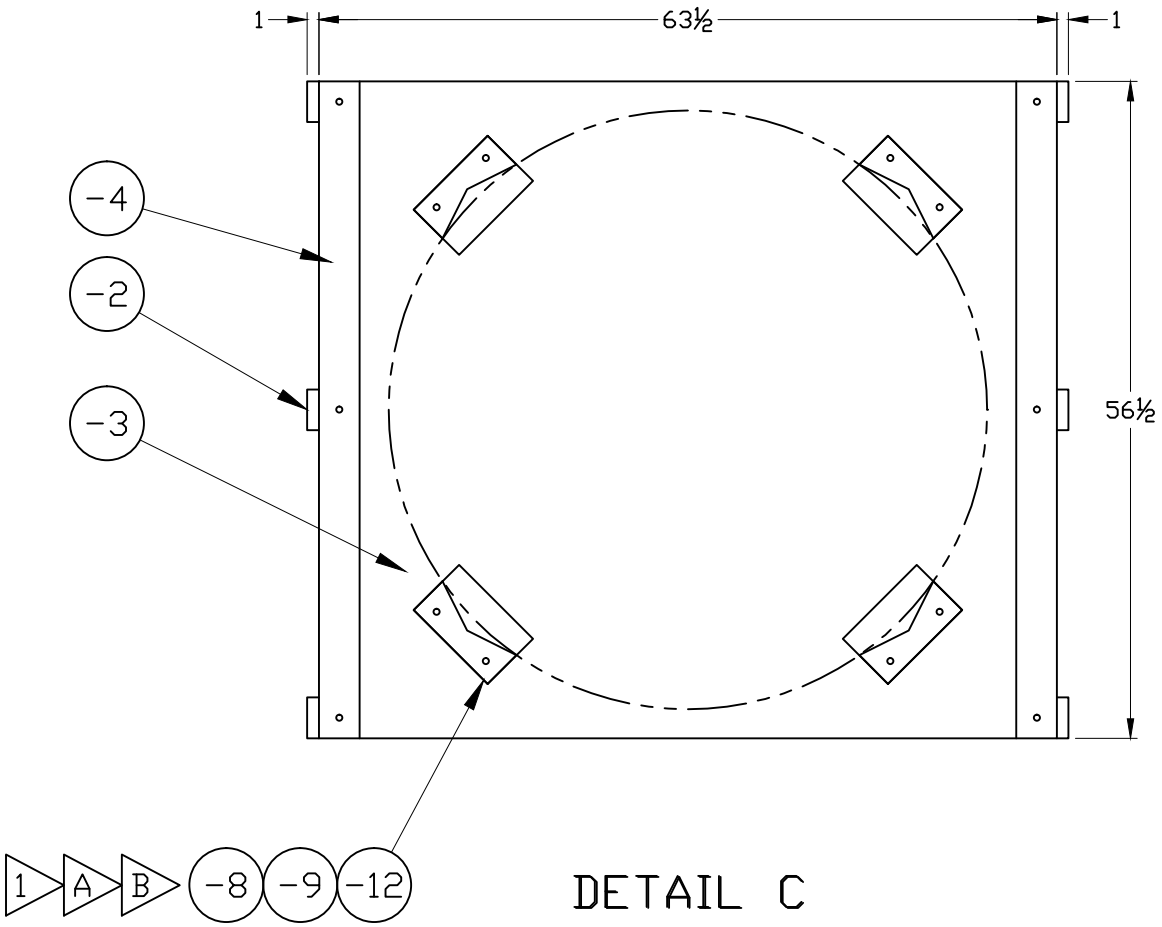

DETAIL C

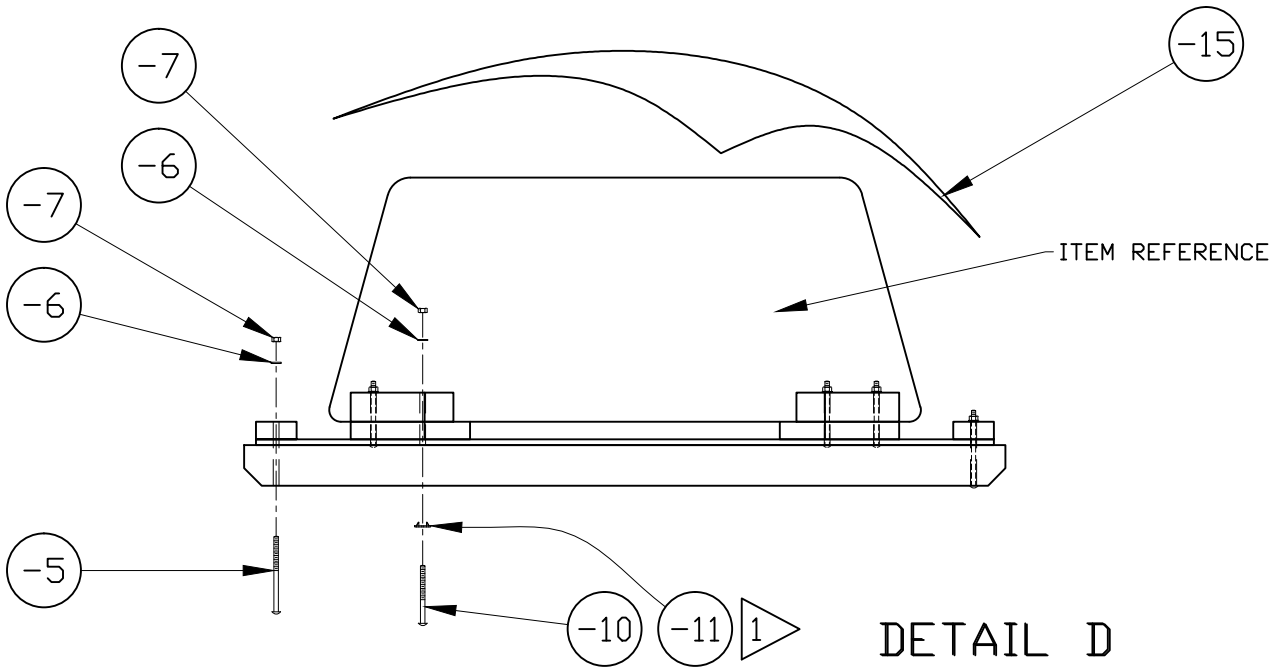

DETAIL D
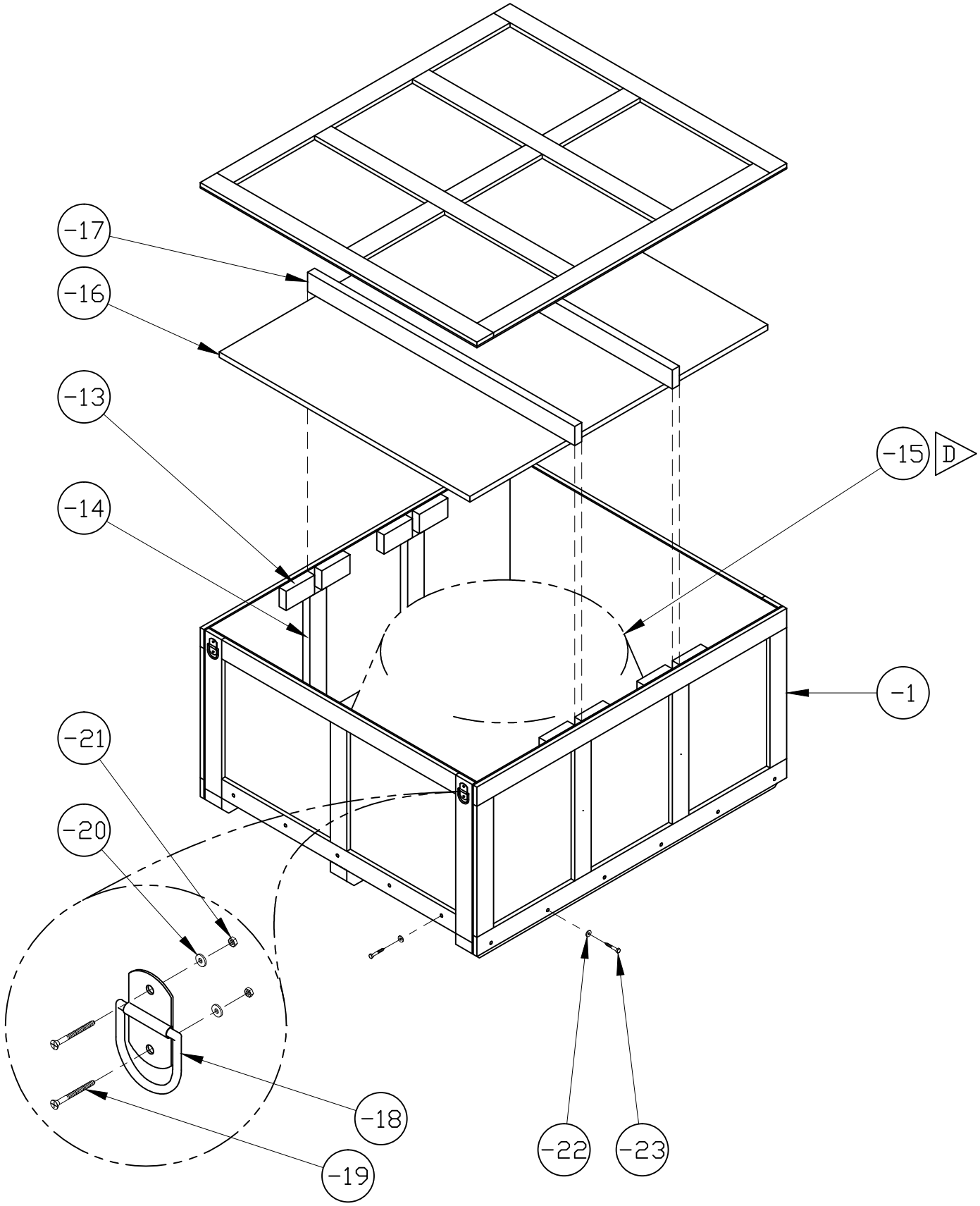
SPECIAL PACKAGING INSTRUCTION	CODE ID 98747	SPI NO. (TPO) F00-435-1313
ITEM NOMENCLATURE SUPPORT ASSEMBLY FRUSTUM		SHEET 6 OF 6