DEPARTMENT OF THE NAVY
COMMANDER
NAVAL FACILITIES ENGINEERING SYSTEMS COMMAND PACIFIC
258 MAKALAPA DRIVE SUITE 100
PEARL HARBOR HI 96860-3134

Notice No. 9
June 24, 2026

PRE-PROPOSAL QUESTIONS & ANSWERS

RFP N62742-26-R-1306
JFY 2022 PROJECT J-875, BATTLE STAFF TRAINING FACILITY, U.S. NAVSUPPACT MCB CAMP BLAZ, GUAM

NOTE: The following questions and answers are provided for INFORMATION ONLY. The RFP remains unchanged unless it is amended in writing on a Standard Form 30.

REVISED RESPONSES FROM NOTICE NO. 5:

151. Reference: Specifications, 03 30 00 Concrete
Please confirm if all reinforcement for cast-in-place concrete shall be uncoated black steel rebar Grade 60 (ASTM A615/A615M) and epoxy-coated rebar is not required.

ANSWER: Epoxy-coated rebar is not required. See Structural Design Criteria Note 9 on sheet S-001 for additional requirements.

153. Reference: Drawings SB106, SB501, Slab Plan, Structural Fdn/Slab Details
Drawing SB-106 shows concrete shear walls for elevator pit walls. However, the detailed section on Drawing SB-501 Det. B1 shows a non-load bearing CMU wall. Please clarify.

ANSWER: See responses to Q104-105. Sheet SB106 will be revised via forthcoming amendment to show non-loadbearing CMU walls where they occur.

154. Reference: Specifications, 04 20 00 Unit Masonry
Please confirm if spec section 04 20 00 is not applicable for building walls and interior partitions for this project. If this would be applicable, please advise where it should be applicable?

ANSWER: This specification applies to the CMU blow out walls and the north, west and south elevator shaft walls.

156. Reference: Drawing A-750, Miscellaneous Exterior Details
Please confirm if below grade waterproofing for footing and stem wall shall be on the exterior side only.

ANSWER: The below grade waterproofing for footing and stem wall shall be on the exterior sides of exterior walls as shown on Detail A2/A-750 and at the exterior sides of elevator foundation walls. Sheet A-750 will be revised via forthcoming amendment to add elevator footing detail indicating extent of waterproofing.

157. Reference: Drawing SF104 to 105, Second Floor Framing Plan
Please provide detailed structural drawing of the W10x19 spreader beam as per Note 6 of Drawing SF104 & 105.

ANSWER: Spreader beams are not required. Note #6 will be reviewed via forthcoming amendment.

158. Reference: Spec Section 07 24 00, Exterior Insulation & Finish System
Spec Section 07 24 00 Exterior Insulation & Finish System doesn't specify any insulation board. Please confirm that the required Exterior Finish System is a Direct-Applied Exterior Finish System that doesn't require insulation boards.

ANSWER: Confirming that the Exterior Finish System is a direct-applied system that does not require insulation boards.

159. Reference: Drawing SF102 to 105, Second Floor Framing Plan
Please confirm if suspended slab at Elev 16' - 0" shall be under steel deck system?

ANSWER: The slabs at EL16'-0" are not under a steel deck system. The intent is to use stay-in-place metal forms or removable forms to construct the slab and beams at EL 16'-0". See Note 4 on the referenced sheets.

160. Reference: Drawing SF102 to 105, Second Floor Framing Plan
Second floor framing plan at elev. 14' & 16' were updated as per amendment 002. However, updated detailed sections on Drawing SF-501 to SF503 were not provided. Please provide.

ANSWER: Will provide updated detailed sections on SF501 to SF503 via forthcoming amendment.

<u>NOTICE NO. 9</u>

161. Reference: Spec. Section 07 24 00
Exterior Insulation and Finish System
Please confirm if insulation board is required for this specification.

ANSWER: Please refer to response to Q158.

162. Reference: CLIN Schedule and RFP Drawings

Per CLIN Schedule CLIN 0001AB, BASE ITEM: The basis for Item No. 0001AB is the price to perform the removal (over-excavation) of soft, yielding, or unsatisfactory soil materials, and the placement of satisfactory fill per Section 31 00 00 for the site work in Item 0001AB, in place and complete (EST QTY = 1,100 CY). But, we are not able to identify where this Qty is required. Please clarify.

ANSWER: The quantity is provided as an estimate of the floor slab and footing over excavation required by Detail C4 on Sheet SK502, which is referenced on sheet SB101, General Note #2.

163. Reference: Amendment 0003 SF 1442 Block 13

Would the Government consider extending the proposal submission deadline by one additional week beyond July 7, 2026, to account for reduced subcontractor and vendor availability and potential delays in obtaining complete and final pricing during the July 4th holiday period?

ANSWER: Response deferred.

164. Reference: Dwg: AS102 & A-612

Room #119A (Chiller Encl.) On Dwg AS102, Internal Wall Finish for Room #119A marked as EF-1. Whereas Room Finish Schedule A-612 states wall finish as P-1B. Please clarify.

ANSWER: Wall finish for Room 119A Chiller Enclosure is EF-1. Will revise Sheet A-612 via forthcoming amendment to note "See AS102" for Room 119A.

165. Reference: Dwg: AS102 & A-612

Room #119A (Chiller Encl.) On Dwg A-612, Ceiling & Ceiling Finish listed as EXP & P-3A respectively. Whereas on Dwg AS102 Ceiling type marked as Heavy Duty Woven Wire Mesh Panel on Structural Steel. Please confirm which one is correct.

ANSWER: See response to Q164.

166. Reference: Dwg: SB103

On Dwg SB103, Wall located at Grid B & 8 are marked without Wall Type tag. Please provide wall type for the highlighted wall in below image. Also confirm if any wall footing required for these walls.

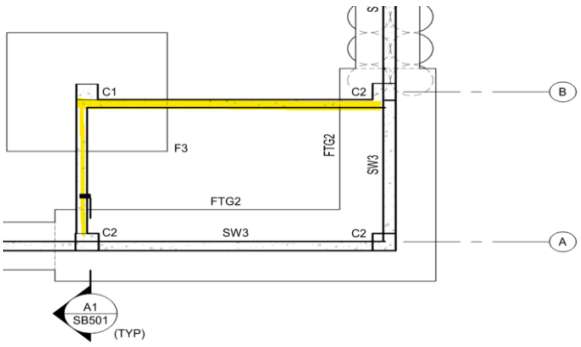

ANSWER: Use wall type SW3, and wall footing FTG1. Will update Sheet SB103 via forthcoming amendment to indicate wall and footing type.

167. Reference: Dwg PL101 thru PL106

Please provide sectional detail for Radon Pipe laying with aggregate fill.

ANSWER: Will provide sectional details via forthcoming amendment for Radon Pipe laying with aggregate fill. The preliminary drawing is attached to this notice.

End of Notice

J-875 BSTF
Response - RFI 167
J. Valmik
06/18/2026

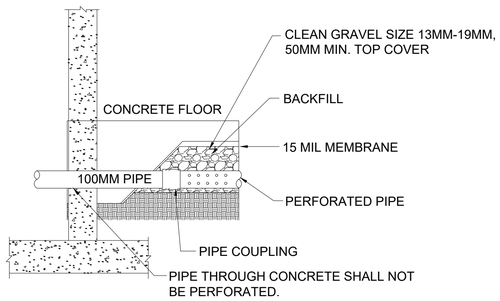

1 RADON PIPE PENETRATION

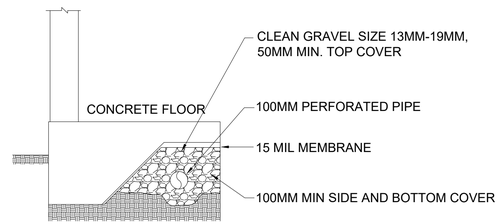

2 RADON PERFORATED PIPE

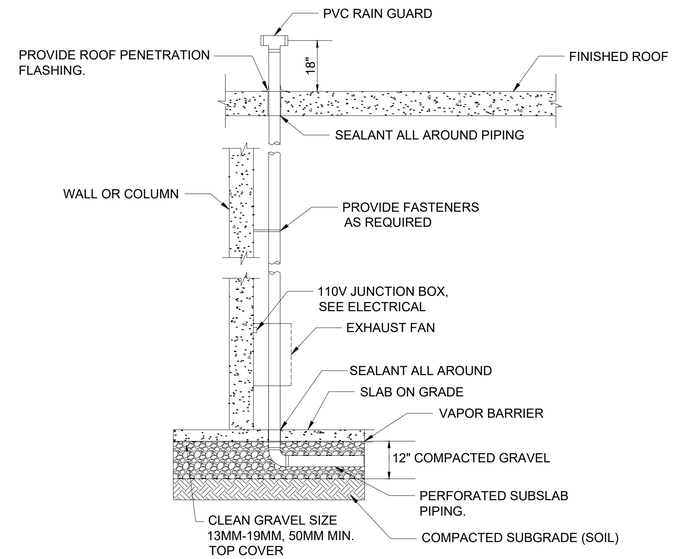

3 RADON RISER DETAIL

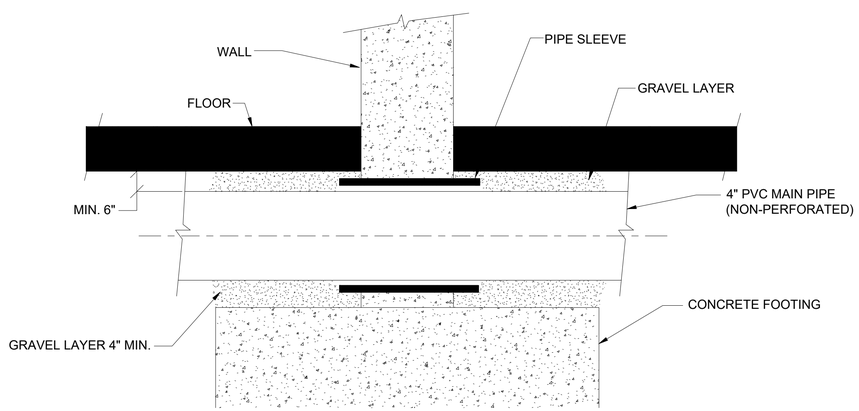

4 TYPICAL RADON PIPE WALL PENETRATION

SCALE: NTS

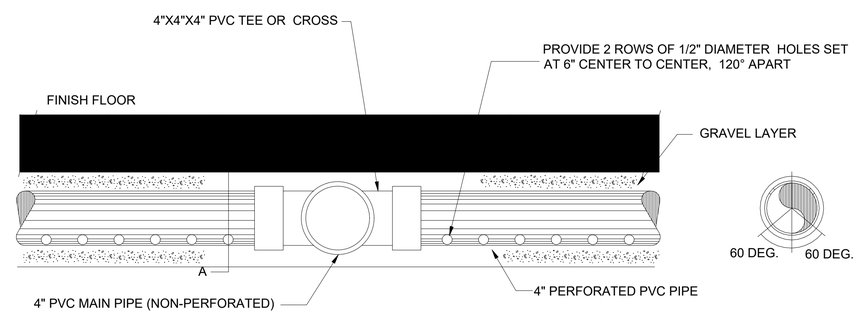

5 TYPICAL RADON VENT PIPE DETAIL

SCALE: NTS