PLUMBING LEGEND

- DOWNWARD SLOPE
- 2-WAY VALVE
- 3-WAY VALVE
- AUTOMATIC AIR VENT
- AUTOMATIC BALANCING VALVE
- BACKFLOW PREVENTER
- BUTTERFLY VALVE
- CHECK VALVE
- DRAIN VALVE
- ECCENTRIC REDUCER
- FLANGE
- FCO — FLOOR CLEAN OUT
- FD — FLOOR DRAIN
- M — GAS OR WATER METER
- GATE VALVE
- GLOBE VALVE
- ISOLATION VALVE
- MANUAL AIR VENT
- MANUAL FLOW CONTROL BALANCING VALVE
- PIPE CAP
- PIPE DOWN
- SUCTION REDUCER
- PIPE ELBOW
- PIPE UP
- PRESSURE GAUGE WITH SHUTOFF COCK
- PRESSURE REDUCING VALVE
- RELIEF VALVE
- SOLENOID VALVE
- SQAURE HEAD BALANCING VALVE
- STRAINER WITH BLOWDOWN VALVE
- TEMPERATURE PRESSURE RELIEF VALVE
- UNION
- WALL CLEAN OUT
- W — WATER METER
- WATER PUMP
- WYE STRAINER
- POINT OF DISCONNECTION
- POINT OF CONNECTION

DCW	DOMESTIC COLD WATER PIPING
DHW	DOMESTIC HOT WATER PIPNG
HWR	DOMESTIC HOT WATER RETURN PIPING
W	SOIL, WASTE OR SANITARY SEWER PIPING
RL	RAIN LEADER
V	VENT PIPING
CA	COMPRESSED AIR PIPING
	THIN LINE WEIGHT INDICATES EXISTING ITEM TO REMAIN
	HEAVY LINE WEIGHT INDICATES NEW WORK TO BE PROVIDED
	HEAVY DASHED LINE WEIGHT INDICATES EXISTING ITEM TO REMOVE, REFER TO DEMOLITION NOTES

DETAIL/SECTION TITLE	DETAIL CALLOUT SYMBOL	SECTION CUT SYMBOL
SECTION, DETAIL OR ELEVATION IDENTIFICATION MARK SECTION, DETAIL OR ELEVATION TITLE PLATE NUMBER WHERE SECTION, DETAIL OR ELEVATION IS TAKEN XX / X-XXX	DETAIL NUMBER PLATE NUMBER WHERE DETAIL IS DRAWN XX / X-XXX	SECTION LETTER PLATE NUMBER WHERE SECTION IS DRAWN VIEW SECTION XX / X-XXX

PLUMBING ABBREVIATIONS

AAV	AIR ADMITTANCE VALVE
ABA	ARCHITECTURAL BARRIERS ACT
AC	ABOVE CEILING
ADA	AMERICANS WITH DISABILITIES ACT
AFF	ABOVE FINISHED FLOOR
AFG	ABOVE FINISHED GRADE
AP	ACCESS PANEL
BF	BELOW FLOOR
BFP	BACKFLOW PREVENTER
BG	BELOW GRADE
BPA	BACKFLOW PREVENTION ASSEMBLY
BTUH	BRITISH THERMAL UNIT PER HOUR
CLG	CEILING
CO	CLEANOUT
CONC	CONCRETE
CW	DOMESTIC COLD WATER
CWV	COMBINED WASTE VENT
DN	DRAWING
DR	DRYER
DWT	DOMESTIC WATER TANK
DWV	DRAIN, WASTE, VENT
EA	EACH
EFF	EFFICENCY
ELEV	ELEVATION
EQUIP	EQUPIMENT
ET	EXPANSION TANK
ETR	EXISTING TO REMAIN
EWC	ELECTRIC WATER COOLER
EWH	ELECTRIC WATER HEATER
F	FAHRENHEIT
FCO	FLOOR CLEANOUT
FD	FLOOR DRAIN
FLA	FULL LOAD AMPS
FT	FEET
FV	FLUSH VALVE
G	NATURAL GAS
GAL	GALLON
GFCI	GOVERNMENT FURNISHED, CONTRACTOR INSTALLED
GPH	GALLONS PER HOUR
GPM	GALLONS PER MINUTE
HB	HOSE BIB
HP	HORSEPOWER
HW	DOMESTIC HOT WATER
HWR	DOMESTIC HOT WATER RECIRC
IM	ICE MAKER
KS	KITCHEN SINK
LAV	LAVATORY
LS	LAUNDRY SINK
MAX	MAXIMUM
MIN	MINIMUM
MRU	MIXING RECIRCULATION UNIT
MS	MOP SINK
MV	MIXING VALVE
NP	NOT PROVIDED
OD	OVERFLOW DRAIN
P	PUMP
PH	PHASE
PSI	POUNDS PER SQUARE INCH
RD	ROOF DRAIN
REF	REFRIGERATOR
RL	ROOF LEADER
RM	RADON MITIGATION PIPING
RPM	REVOLUTIONS PER MINUTE
SAN	SANITARY
SH	SHOWER
SIM	SIMILAR
SMP	SUMP PUMP
SS	SERVICE SINK
TYP	TYPICAL
U.O.N.	UNLESS OTHERWISE NOTED
UR	URINAL
V	VENT
VS	VENT STACK
VTR	VENT THRU ROOF
W	WASTE
WC	WATER CLOSET
WCO	WALL CLEANOUT
WHA	WATER HAMMER ARRESTOR
WS	WASTE STACK
WSHR	WASHING MACHINE
°	DEGREES
Ø	DIAMETER

GENERAL PLUMBING NOTES

1. PROVIDE ALL MATERIALS AND EQUIPMENT AND PERFORM ALL LABOR REQUIRED TO INSTALL COMPLETE AND OPERABLE PLUMBING SYSTEMS AS INDICATED ON THE DRAWINGS, SPECIFIED AND AS REQUIRED BY CODE.
2. FIELD VERIFY ALL EXISTING CONDITIONS, PRIOR TO BEGINNING WORK. EXISTING PIPE AND EQUIPMENT SIZES AND LOCATIONS ARE BASED ON AS-BUILT DRAWINGS AND ARE NOTED FOR THE CONVENIENCE OF THE CONTRACTOR ONLY AND ARE NOT WARRANTED TO BE CORRECT.
3. CUT OPENINGS, AS REQUIRED, IN EXISTING CONSTRUCTION FOR THE INSTALLATION OF PIPING AND EQUIPMENT. PATCH AND REPAIR ALL HOLES FROM REMOVAL OF PIPING AND/OR EQUIPMENT TO MATCH ADJACENT CONSTRUCTION. OPENINGS IN EXISTING CONCRETE MASONRY CONSTRUCTION MUST BE SAW-CUT.
4. COORDINATE WITH ARCHITECTURAL DRAWINGS PRIOR TO ROUGHING-IN PLUMBING FIXTURES. FIXTURES MUST BE LOCATED AS DETAILED ON THE ARCHITECTURAL DRAWINGS.
5. THE CONTRACTOR MUST COORDINATE HIS WORK WITH OTHER TRADES PRIOR TO FABRICATION AND INSTALLATION TO PREVENT CONFLICTS. NOTIFY CONTRACTING OFFICER WHERE CONFLICTS ARE DISCOVERED PRIOR TO CONSTRUCTION AND BEFORE BEGINNING WORK IN THOSE AREAS. ALL CONFLICTS THAT ARISE DUE TO LACK OF COORDINATION MUST BE RECTIFIED BY THE CONTRACTOR AT NO COST TO THE GOVERNMENT.
6. INSTALL ALL EQUIPMENT IN STRICT ACCORDANCE WITH MANUFACTURER'S INSTRUCTIONS.
7. SLOPES AND INVERT ELEVATIONS OF ALL INTERIOR PIPING MUST BE ESTABLISHED BEFORE ANY PIPING IS INSTALLED, IN ORDER TO MAINTAIN PIPE SLOPES. ALL PIPING MUST AVOID CONFLICT WITH OTHER TRADES.
8. LAYOUT OF PIPING IS DIAGRAMMATIC. PROVIDE ALL PIPING CONCEALED ABOVE CEILING OR IN WALLS OR CHASES UNLESS OTHERWISE NOTED. PROVIDE ALL EXPOSED PIPING AS HIGH AS POSSIBLE, UNLESS OTHERWISE NOTED. ALLOW FOR RISES, DROPS, AND OFFSETS AS REQUIRED.
9. MAKE HOT AND COLD WATER, HOT WATER RECIRCULATING, WASTE, VENT, AND GAS, ETC PIPING CONNECTIONS TO ALL FIXTURES AND EQUIPMENT, WHETHER SHOWN OR NOT
10. PROVIDE ALL PLUMBING FIXTURES AND EQUIPMENT WITH ACCESSIBLE STOPS.
11. ALL CLEANOUTS MUST BE FULL SIZE OF PIPE.
12. PROVIDE DEEP SEAL TRAPS WITH TRAP GUARD (TO PREVENT SEWER GAS BACKUP) FOR ALL FLOOR DRAINS.
13. PLASTIC PIPE MUST NOT BE INSTALLED IN RETURN AIR PLENUMS.
14. WHERE APPLICABLE, MATERIALS AND EQUIPMENT MUST HAVE STAMPS OR SEALS OF AHRI, ASME, UL, OR ASTM. THE CONTRACTOR MUST MAKE TESTS FOR ACCEPTANCE AND APPROVAL BY CODE AND THE REQUIREMENTS OF APPLICABLE REGULATORY AGENCIES. REQUIRED TESTS MUST BE PERFORMED IN THE PRESENCE OF THE GOVERNMENT UNLESS OTHERWISE WAIVED IN WRITING.
15. GENERAL NOTES ON THIS DRAWING ARE APPLICABLE TO EACH PLUMBING DRAWING OF THIS SET. GENERAL NOTES SPECIFIC TO INDIVIDUAL PLUMBING DRAWINGS ARE SHOWN ON THE RESPECTIVE PLUMBING DRAWING.

SYM	DESCRIPTION	DATE	APPR

NAVFAC

LICENSED PROFESSIONAL ENGINEER
JITENDRA VALMIK
062-072817
OF ILLINOIS
EXP: 11/30/2027
SIGNED: 03/11/2026

ASMD LLC.
A/E INFO

APPROVED
Evan Mizer
FOR COMMANDER NAVFAC 03/ /2026

ACTIVITY
NATHANIEL PYRON, MILCON PLANNER, DPPH

SATISFACTORY TO DATE 3/10/2026

DES	DRW	CHK
JV	AL	AP

PM/DM DKS/DMK
BRANCH MANAGER KYM
CHIEF ENG/ARCH KYM
FIRE PROTECTION RYO

DEPARTMENT OF THE NAVY
NAVAL FACILITIES ENGINEERING SYSTEMS COMMAND
NAVFAC PACIFIC
U.S. NAVSUPPACT
NAVAL FACILITIES ENGINEERING SYSTEMS COMMAND ~ PACIFIC
MAKALAPA, HAWAII
MCB CAMP BLAZ, GUAM
JFY 2022 PROJECT J-875
BATTLE STAFF TRAINING FACILITY
PLUMBING LEGEND, ABBREVIATIONS AND NOTES

SCALE: NTS
EPROJECT NO.: 1696746
CONSTR. CONTR. NO.
NAVFAC DRAWING NO. 17322048
SHEET 218 OF 468
P-001

DRAWFORM REVISION: 25 AUGUST 2020

3/11/2026 4:55:48 PM P-001
C:\REVIT_2024_PROJECT_FILES\BLDG-J-875-1696746-P_7542_Jon_Koenig.rvt

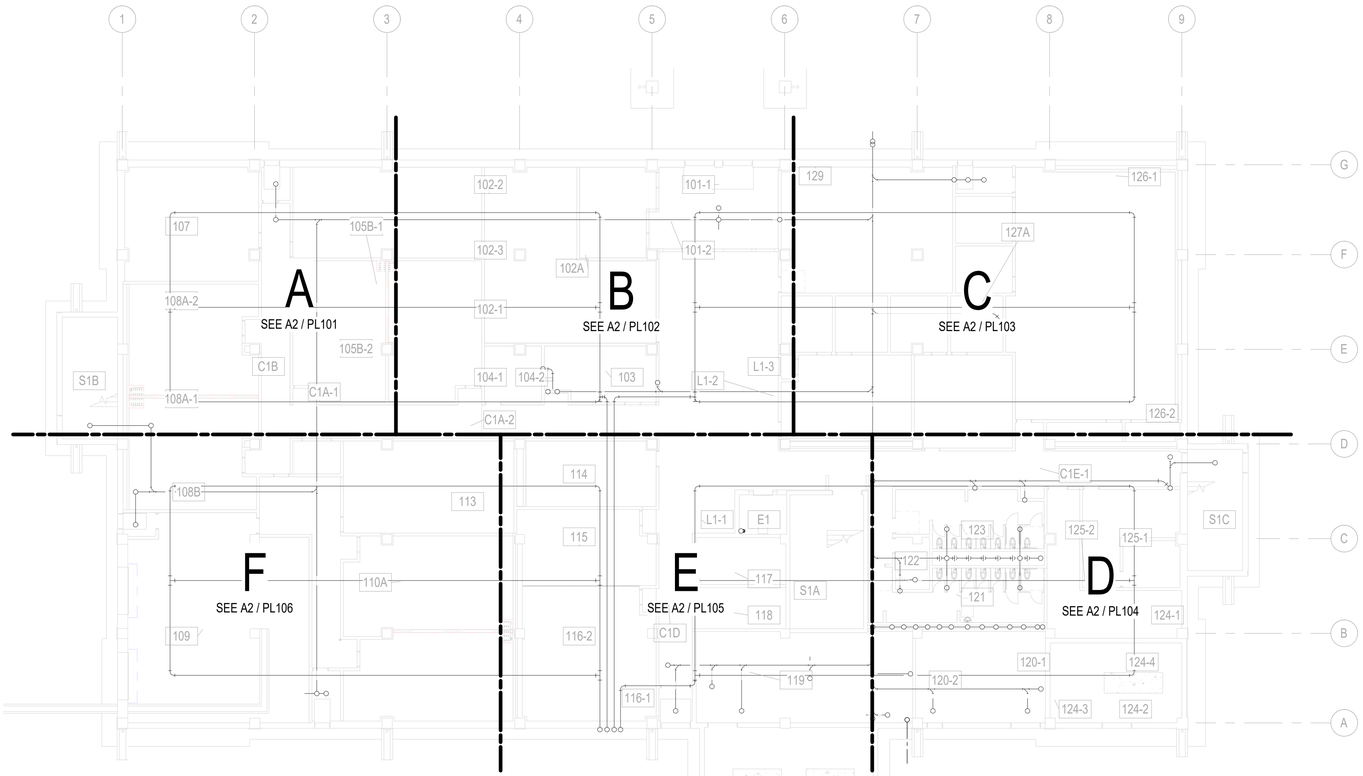

B1 COMPOSITE PLUMBING PLAN - BELOW FIRST FLOOR

1/16" = 1'-0"

GENERAL NOTES

ROOM LEGEND - FIRST FLOOR

NO.	NAME
101-1	ENTRY VESTIBULE-1
101-2	ENTRY VESTIBULE-2
102-1	TA - HQ CAMP COMMANDANT-1
102-2	TA - HQ CAMP COMMANDANT-2
102-3	TA - HQ CAMP COMMANDANT-3
102A	ENTRY CONTROL POINT
103	BREAK RM
104-1	NURSING RM-1
104-2	NURSING RM-2
105B-1	TA - G3 FOPS-1
105B-2	TA - G3 FOPS-2

NO.	NAME
107	TA - G4 LOGISTICS
108A-1	TA - G2 COLLECTIONS AND ANALYSIS-1
108A-2	TA - G2 COLLECTIONS AND ANALYSIS-2
108B	TA - G2 COLLECTIONS AND ANALYSIS
109	INTERIOR COC TRAINING PAD
110A	TA - G3 STRIKE CELL
113	TA - G3 FIRES
114	SVTC CONF RM / SIPR CAFE
115	GTR 1
116-1	GTR 1T (TRAINING TELECOMM RM)-1
116-2	GTR 1T (TRAINING TELECOMM RM)-2

NO.	NAME
117	ELEV MACHINE RM
118	CTR 1
119	MECH RM
120-1	ELEC RM-1
120-2	ELEC RM-2
121	MEN
122	JAN
123	WOMEN
124-1	TRAINING MATERIAL STORAGE-1
124-2	TRAINING MATERIAL STORAGE-2
124-3	TRAINING MATERIAL STORAGE-3
124-4	TRAINING MATERIAL STORAGE-4
125-1	TA - MEDICAL CELL-1

NO.	NAME
125-2	TA - MEDICAL CELL-2
126-1	TA - COC WATCH FLOOR-1
126-2	TA - COC WATCH FLOOR-2
127A	OFFICE
129	TA - G5 PLANS
C1A-1	CORRIDOR 1A-1
C1A-2	CORRIDOR 1A-2
C1B	CORRIDOR 1B
C1D	CORRIDOR 1D
C1E-1	CORRIDOR 1E-1
C1E-2	CORRIDOR 1E-2
E1	ELEV 1
L1-1	LOBBY 1-1

NO.	NAME
L1-2	LOBBY 1-2
L1-3	LOBBY 1-3
S1A	STAIR 1A
S1B	STAIR 1B
S1C	STAIR 1C

KEY PLAN

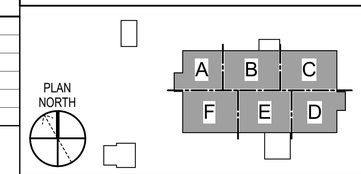

GRAPHIC SCALE(S)

1/16" = 1' - 0" 0 5' 10' 20' 30' 60'

SYM	DESCRIPTION	DATE	APPR

NAVFAC

LICENSED PROFESSIONAL ENGINEER
JITENDRA VALMIK
062-072817
OF ILLINOIS
EXP: 11/30/2027
SIGNED: 03/11/2026 M.A.

ASMD LLC.
A/E INFO

APPROVED
FOR COMMANDER NAVFAC
ACTIVITY
NATHANIEL PYRON, MILCON PLANNER, DPPH
SATISFACTORY TO DATE 3/10/2026
DES JV | DRW AL | CHK AP
PM/DM DKS/DMK
BRANCH MANAGER KYM
CHIEF ENG/ARCH KYM
FIRE PROTECTION RYO

DEPARTMENT OF THE NAVY
NAVFAC PACIFIC
U.S. NAVSUPPACT
NAVAL FACILITIES ENGINEERING SYSTEMS COMMAND
NAVAL FACILITIES ENGINEERING SYSTEMS COMMAND ~ PACIFIC
MAKALAPA, HAWAII
MCB CAMP BLAZ, GUAM
JFY 2022 PROJECT J-875
BATTLE STAFF TRAINING FACILITY
COMPOSITE PLUMBING PLAN - BELOW FIRST FLOOR

SCALE: 1/16" = 1'-0"
EPROJECT NO.: 1696746
CONSTR. CONTR. NO.
NAVFAC DRAWING NO. 17322049
SHEET 219 OF 468
PL100

DRAWFORM REVISION: 25 AUGUST 2020

3/11/2026 4:55:52 PM PL100
C:\REVIT_2024_PROJECT_FILES\BLDG-J-875-1696746-P_7542_Jon_Koenig.rvt

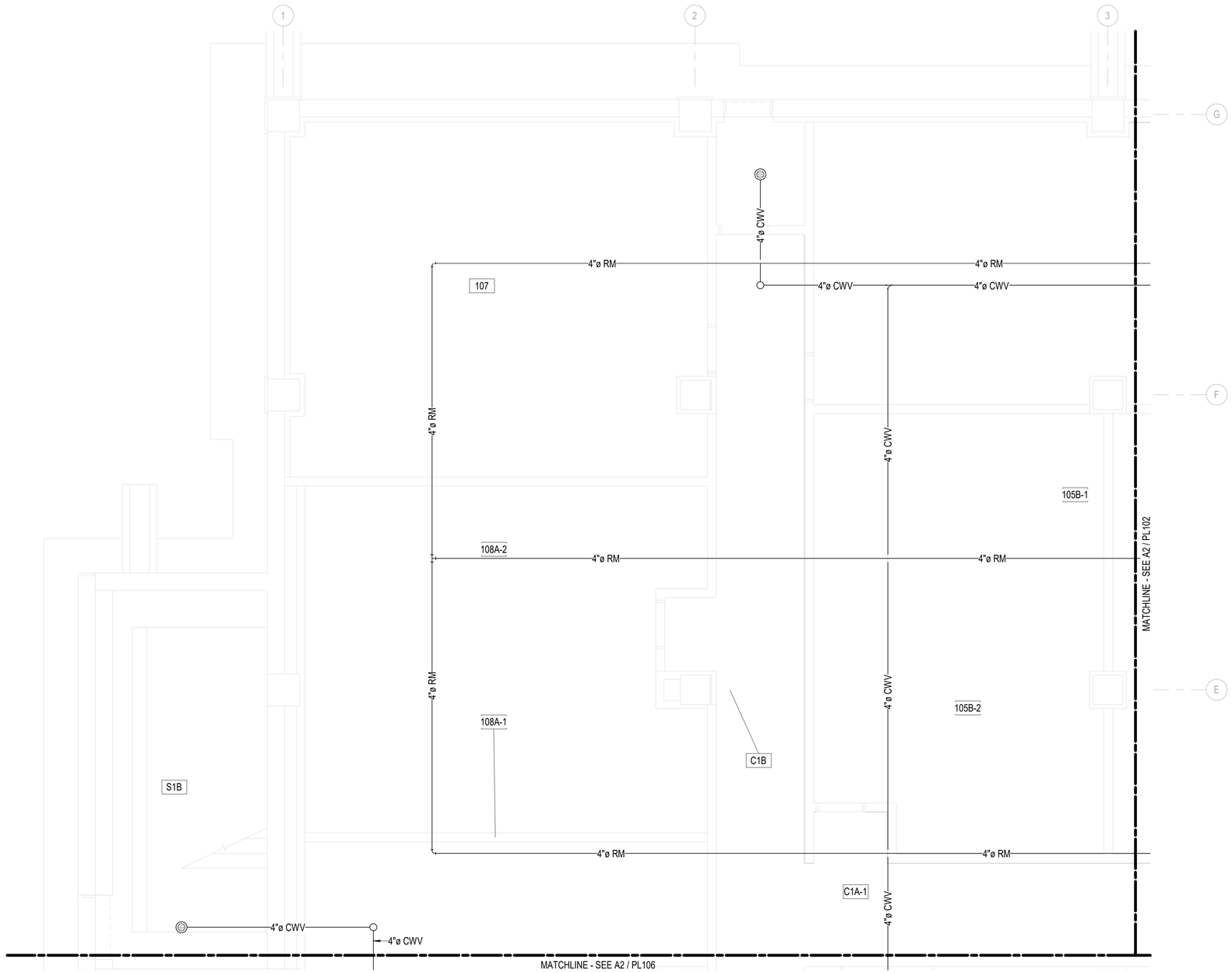

A2 PLUMBING PLAN - BELOW FIRST FLOOR - AREA 'A'

1/4" = 1'-0"

GENERAL NOTES

ROOM LEGEND - FIRST FLOOR AREA 'A'

NO.	NAME
105B-1	TA - G3 FOPS-1
105B-2	TA - G3 FOPS-2
107	TA - G4 LOGISTICS
108A-1	TA - G2 COLLECTIONS AND ANALYSIS-1
108A-2	TA - G2 COLLECTIONS AND ANALYSIS-2
C1A-1	CORRIDOR 1A-1
C1A-2	CORRIDOR 1A-2
C1B	CORRIDOR 1B
S1B	STAIR 1B

KEY PLAN

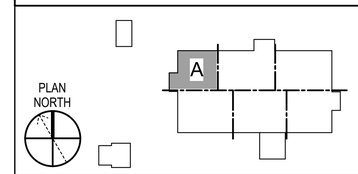

GRAPHIC SCALE(S)

1/4" = 1' - 0"

0 1' 5' 10' 15'

SYM	DESCRIPTION	DATE	APPR

NAVFAC

LICENSED PROFESSIONAL ENGINEER
JITENDRA VALMIK
062-072817
OF ILLINOIS
EXP: 11/30/2027
SIGNED: 03/11/2026 M.A.

ASMD LLC.
A/E INFO

APPROVED

FOR COMMANDER NAVFAC

ACTIVITY
NATHANIEL PYRON, MILCON PLANNER, DPPH

SATISFACTORY TO DATE 3/10/2026

DES JV | DRW AL | CHK AP

PM/DM DKS/DMK

BRANCH MANAGER KYM

CHIEF ENG/ARCH KYM

FIRE PROTECTION RYO

DEPARTMENT OF THE NAVY
NAVAL FACILITIES ENGINEERING SYSTEMS COMMAND
NAVFAC PACIFIC
U.S. NAVSUPPACT

NAVAL FACILITIES ENGINEERING SYSTEMS COMMAND – PACIFIC
MAKALAPA, HAWAII

MCB CAMP BLAZ, GUAM

JFY 2022 PROJECT J-875
BATTLE STAFF TRAINING FACILITY

PLUMBING PLAN - BELOW FIRST FLOOR - AREA 'A'

SCALE: 1/4" = 1'-0"

EPROJECT NO.: 1696746

CONSTR. CONTR. NO.

NAVFAC DRAWING NO.
17322050

SHEET 220 OF 468

PL101

DRAWFORM REVISION: 25 AUGUST 2020

3/11/2026 4:55:56 PM PL101
C:\REVIT_2024_PROJECT_FILES\BLDG-J-875-1696746-P_7542_Jon_Koenig.rvt

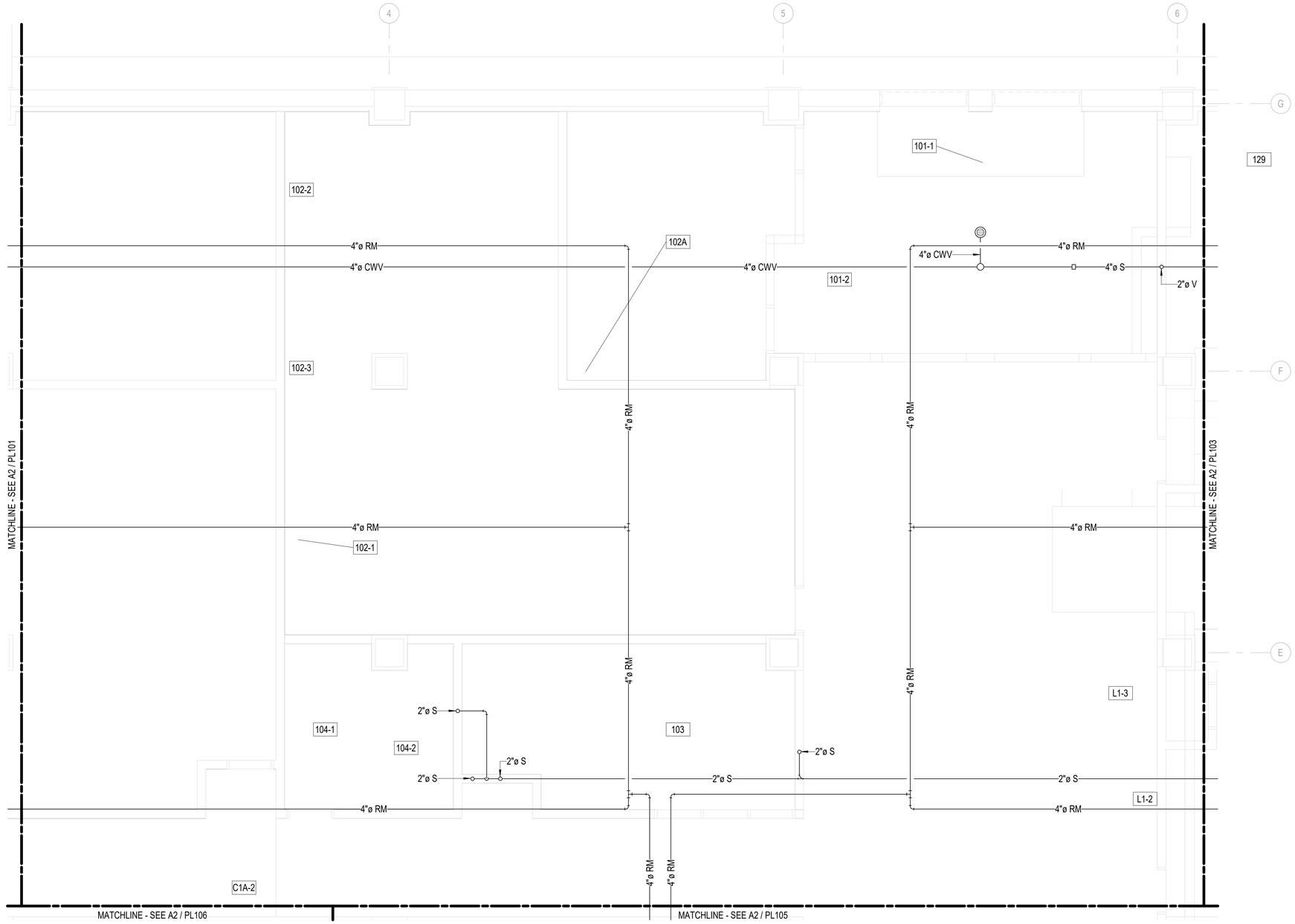

A2 PLUMBING PLAN - BELOW FIRST FLOOR - AREA 'B'

1/4" = 1'-0"

GENERAL NOTES

ROOM LEGEND - FIRST FLOOR AREA 'B'

NO.	NAME
101-1	ENTRY VESTIBULE-1
101-2	ENTRY VESTIBULE-2
102-1	TA - HQ CAMP COMMANDANT-1
102-2	TA - HQ CAMP COMMANDANT-2
102-3	TA - HQ CAMP COMMANDANT-3
102A	ENTRY CONTROL POINT
103	BREAK RM
104-1	NURSING RM-1
104-2	NURSING RM-2
105B-1	TA - G3 FOPS-1
127A	OFFICE
129	TA - G5 PLANS
C1A-2	CORRIDOR 1A-2
L1-2	LOBBY 1-2
L1-3	LOBBY 1-3

KEY PLAN

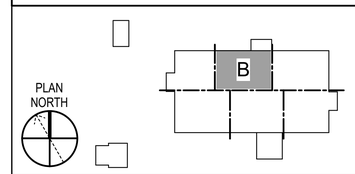

GRAPHIC SCALE(S)

1/4" = 1' - 0" 0 1' 5' 10' 15'

SYM	DESCRIPTION	DATE	APPR

NAVFAC

LICENSED PROFESSIONAL ENGINEER
JITENDRA VALMIK
062-072817
OF ILLINOIS
EXP: 11/30/2027
SIGNED: 03/11/2026 M.A.

ASMD LLC.
A/E INFO

APPROVED
FOR COMMANDER NAVFAC
ACTIVITY
NATHANIEL PYRON, MILCON PLANNER, DPPH
SATISFACTORY TO DATE 3/10/2026
DES JV DRW AL CHK AP
PMDM DKS/DMK
BRANCH MANAGER KYM
CHIEF ENG/ARCH KYM
FIRE PROTECTION RYO

DEPARTMENT OF THE NAVY
NAVFAC PACIFIC
U.S. NAVSUPPACT
NAVAL FACILITIES ENGINEERING SYSTEMS COMMAND ~ PACIFIC
NAVAL FACILITIES ENGINEERING SYSTEMS COMMAND
MAKALAPA, HAWAII
MCB CAMP BLAZ, GUAM
JFY 2022 PROJECT J-875
BATTLE STAFF TRAINING FACILITY
PLUMBING PLAN - BELOW FIRST FLOOR - AREA 'B'

SCALE: 1/4" = 1'-0"
EPROJECT NO.: 1696746
CONSTR. CONTR. NO.
NAVFAC DRAWING NO. 17322051
SHEET 221 OF 468
PL102

DRAWFORM REVISION: 25 AUGUST 2020

3/11/2026 4:55:59 PM PL102
C:\REVIT_2024_PROJECT_FILES\BLDG-J-875-1696746-P_7542_Jon_Koenig.rvt

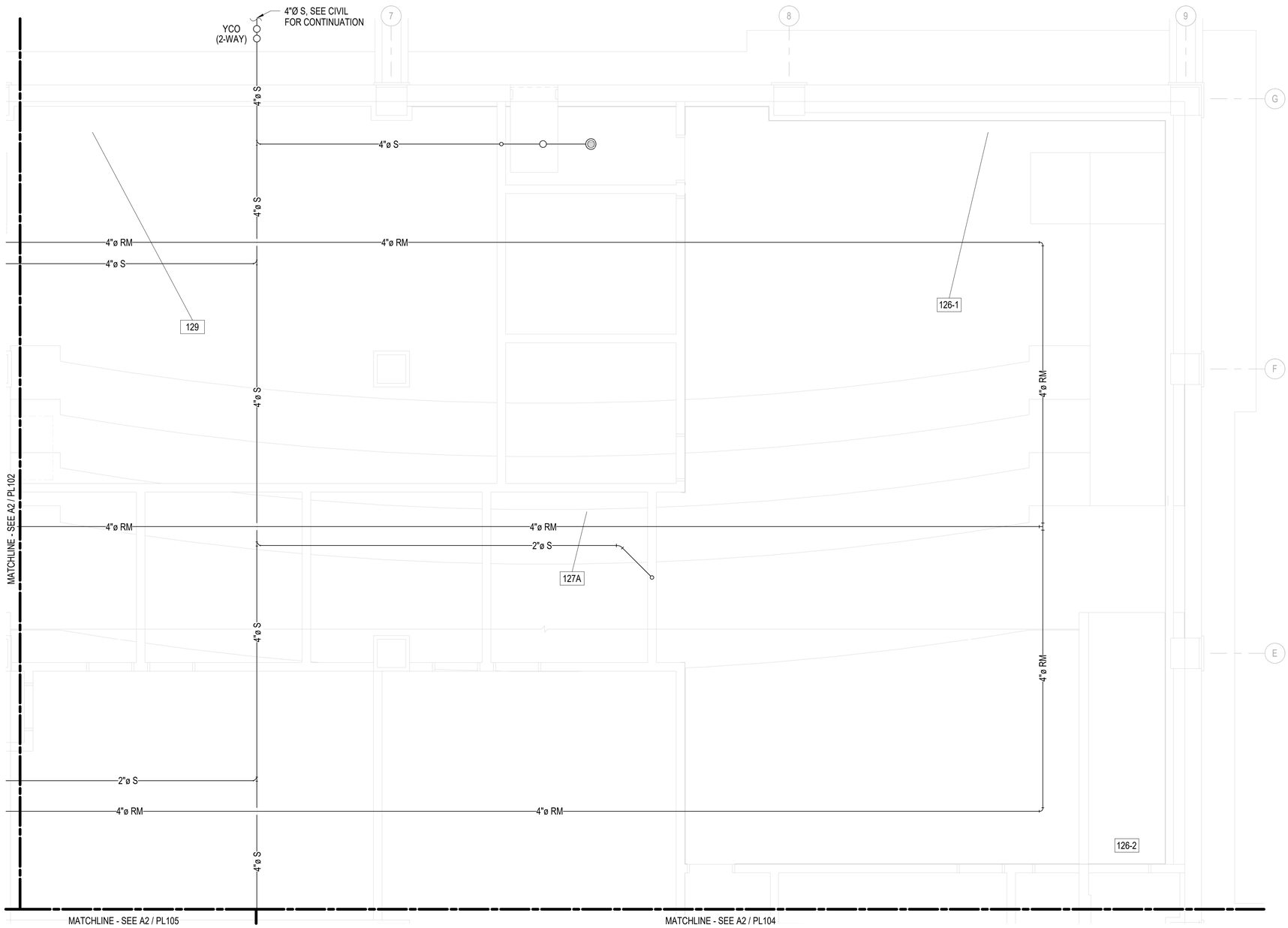

A2 PLUMBING PLAN - BELOW FIRST FLOOR - AREA 'C'

1/4" = 1'-0"

GENERAL NOTES

ROOM LEGEND - FIRST FLOOR AREA 'C'

NO.	NAME
126-1	TA - COC WATCH FLOOR-1
126-2	TA - COC WATCH FLOOR-2
127A	OFFICE
129	TA - G5 PLANS

KEY PLAN

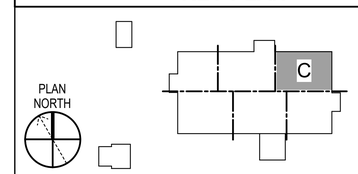

GRAPHIC SCALE(S)

1/4" = 1' - 0" 0 1' 5' 10' 15'

SYM	DESCRIPTION	DATE	APPR

LICENSED PROFESSIONAL ENGINEER JITENDRA VALMIK 062-072817 OF ILLINOIS
EXP: 11/30/2027
SIGNED: 03/11/2026 M.A.

APPROVED
FOR COMMANDER NAVFAC
ACTIVITY
NATHANIEL PYRON, MILCON PLANNER, DPPH
SATISFACTORY TO DATE 3/10/2026

DES JV	DRW AL	CHK AP	
PM/DM			DKS/DMK
BRANCH MANAGER			KYM
CHIEF ENG/ARCH			KYM
FIRE PROTECTION			RYO

DEPARTMENT OF THE NAVY
NAVFAC PACIFIC
U.S. NAVSUPPACT
NAVAL FACILITIES ENGINEERING SYSTEMS COMMAND
NAVAL FACILITIES ENGINEERING SYSTEMS COMMAND ~ PACIFIC
MAKALAPA, HAWAII
MCB CAMP BLAZ, GUAM
JFY 2022 PROJECT J-875
BATTLE STAFF TRAINING FACILITY
PLUMBING PLAN - BELOW FIRST FLOOR - AREA 'C'

SCALE: 1/4" = 1'-0"
EPROJECT NO.: 1696746
CONSTR. CONTR. NO.
NAVFAC DRAWING NO. 17322052
SHEET 222 OF 468
PL103
DRAWFORM REVISION: 25 AUGUST 2020

3/11/2026 4:56:03 PM PL103
C:\REVIT_2024_PROJECT_FILES\BLDG-J-875-1696746-P_7542_Jon_Koenig.rvt

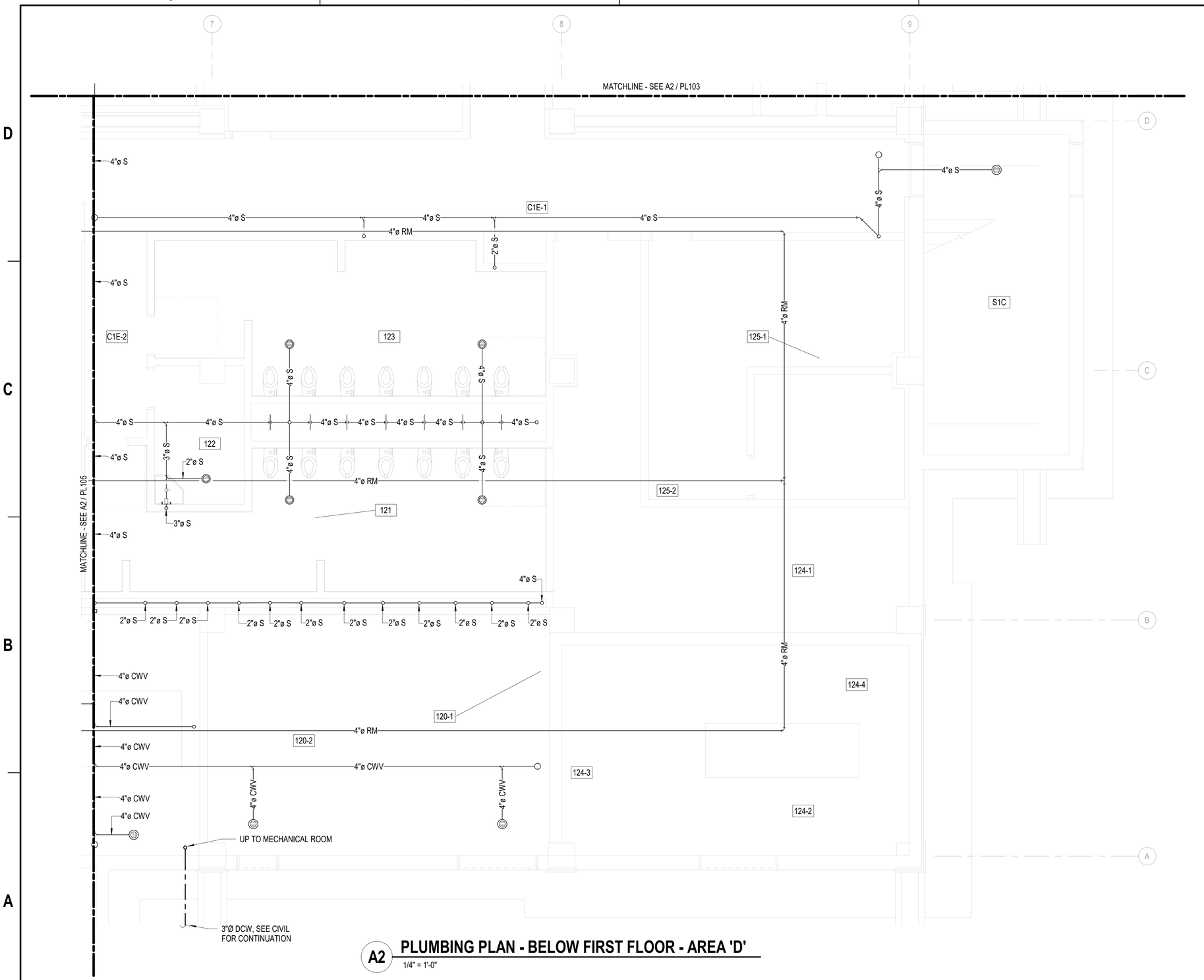

A2 PLUMBING PLAN - BELOW FIRST FLOOR - AREA 'D'

1/4" = 1'-0"

GENERAL NOTES

ROOM LEGEND - FIRST FLOOR AREA 'D'

NO.	NAME
119	MECH RM
120-1	ELEC RM-1
120-2	ELEC RM-2
121	MEN
122	JAN
123	WOMEN
124-1	TRAINING MATERIAL STORAGE-1
124-2	TRAINING MATERIAL STORAGE-2
124-3	TRAINING MATERIAL STORAGE-3
124-4	TRAINING MATERIAL STORAGE-4
125-1	TA - MEDICAL CELL-1
125-2	TA - MEDICAL CELL-2
127A	OFFICE
C1E-1	CORRIDOR 1E-1
C1E-2	CORRIDOR 1E-2
L1-2	LOBBY 1-2
S1C	STAIR 1C

KEY PLAN

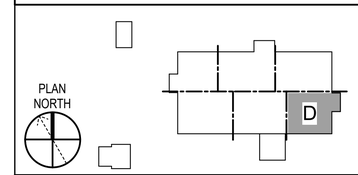

GRAPHIC SCALE(S)

1/4" = 1' - 0" 0 1' 5' 10' 15'

SYM	DESCRIPTION	DATE	APPR

NAVFAC

LICENSED PROFESSIONAL ENGINEER JITENDRA VALMIK 062-072817 STATE OF ILLINOIS
EXP: 11/30/2027
SIGNED: 03/11/2026 M.A.

ASMD LLC. A/E INFO

APPROVED
FOR COMMANDER NAVFAC
ACTIVITY
NATHANIEL PYRON, MILCON PLANNER, DPPH
SATISFACTORY TO DATE 3/10/2026

DES	JV	DRW	AL	CHK	AP

PMDM DKS/DMK
BRANCH MANAGER KYM
CHIEF ENG/ARCH KYM
FIRE PROTECTION RYO

DEPARTMENT OF THE NAVY
NAVAL FACILITIES ENGINEERING SYSTEMS COMMAND ~ PACIFIC
NAVFAC PACIFIC
U.S. NAVSUPPACT

NAVAL FACILITIES ENGINEERING SYSTEMS COMMAND ~ PACIFIC
MAKALAPA, HAWAII

MCB CAMP BLAZ, GUAM

JFY 2022 PROJECT J-875
BATTLE STAFF TRAINING FACILITY

PLUMBING PLAN - BELOW FIRST FLOOR - AREA 'D'

SCALE: 1/4" = 1'-0"
EPROJECT NO.: 1696746
CONSTR. CONTR. NO.
NAVFAC DRAWING NO. 17322053
SHEET 223 OF 468

PL104

DRAWFORM REVISION: 25 AUGUST 2020

3/11/2026 4:56:07 PM PL104
C:\REVIT_2024_PROJECT_FILES\BLDG-J-875-1696746-P_7542_Jon_Koenig.rvt

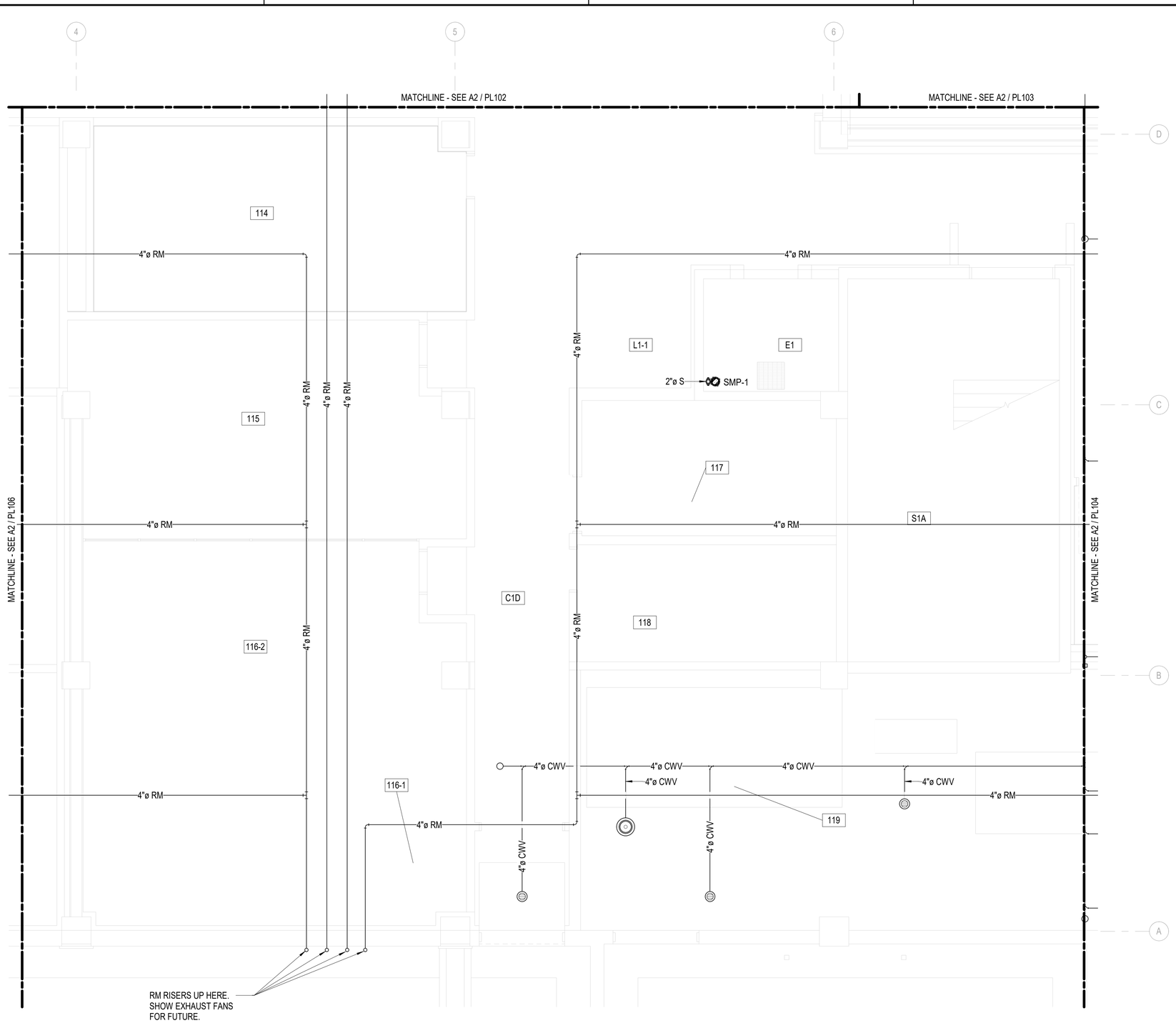

A2 PLUMBING PLAN - BELOW FIRST FLOOR - AREA 'E'

1/4" = 1'-0"

GENERAL NOTES

ROOM LEGEND - FIRST FLOOR AREA 'E'

NO.	NAME
110A	TA - G3 STRIKE CELL
113	TA - G3 FIRES
114	SVTC CONF RM / SIPR CAFE
115	GTR 1
116-1	GTR 1T (TRAINING TELECOMM RM)-1
116-2	GTR 1T (TRAINING TELECOMM RM)-2
117	ELEV MACHINE RM
118	CTR 1
119	MECH RM
C1D	CORRIDOR 1D
E1	ELEV 1
L1-1	LOBBY 1-1
L1-2	LOBBY 1-2
S1A	STAIR 1A

KEY PLAN

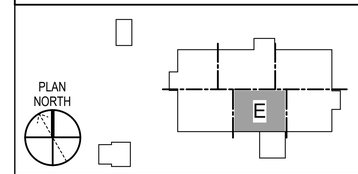

GRAPHIC SCALE(S)

1/4" = 1' - 0" 0 1' 5' 10' 15'

SYM	DESCRIPTION	DATE	APPR

LICENSED PROFESSIONAL ENGINEER
JITENDRA VALMIK
062-072817
OF ILLINOIS
EXP: 11/30/2027
SIGNED: 03/11/2026

APPROVED
FOR COMMANDER NAVFAC
ACTIVITY
NATHANIEL PYRON, MILCON PLANNER, DPPH
SATISFACTORY TO DATE 3/10/2026
DES JV DRW AL CHK AP
PMDM DKS/DMK
BRANCH MANAGER KYM
CHIEF ENG/ARCH KYM
FIRE PROTECTION RYO

DEPARTMENT OF THE NAVY
NAVFAC PACIFIC
NAVAL FACILITIES ENGINEERING SYSTEMS COMMAND ~ PACIFIC
NAVAL FACILITIES ENGINEERING SYSTEMS COMMAND
MAKALAPA, HAWAII
U.S. NAVSUPPACT
MCB CAMP BLAZ, GUAM
JFY 2022 PROJECT J-875
BATTLE STAFF TRAINING FACILITY
PLUMBING PLAN - BELOW FIRST FLOOR - AREA 'E'

SCALE: 1/4" = 1'-0"
EPROJECT NO.: 1696746
CONSTR. CONTR. NO.
NAVFAC DRAWING NO. 17322054
SHEET 224 OF 468
PL105

DRAWFORM REVISION: 25 AUGUST 2020

3/11/2026 4:56:11 PM PL105
C:\REVIT_2024_PROJECT_FILES\BLDG-J-875-1696746-P_7542_Jon_Koenig.rvt

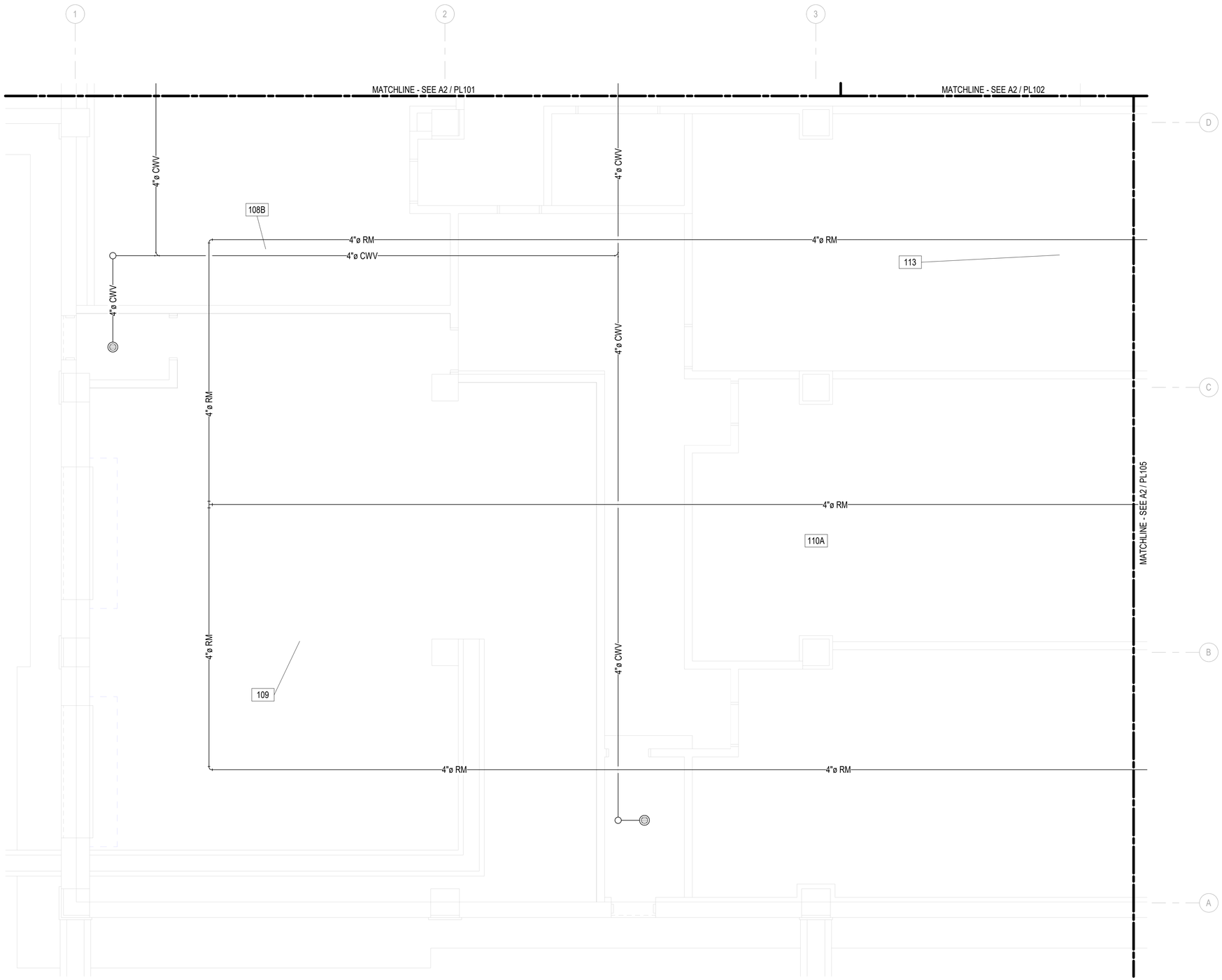

A2 PLUMBING PLAN - BELOW FIRST FLOOR - AREA 'F'

1/4" = 1'-0"

GENERAL NOTES

ROOM LEGEND - FIRST FLOOR AREA 'F'

NO.	NAME
108A-1	TA - G2 COLLECTIONS AND ANALYSIS-1
108B	TA - G2 COLLECTIONS AND ANALYSIS
109	INTERIOR COC TRAINING PAD
110A	TA - G3 STRIKE CELL
113	TA - G3 FIRES
C1A-2	CORRIDOR 1A-2
C1B	CORRIDOR 1B

KEY PLAN

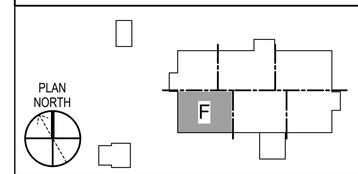

GRAPHIC SCALE(S)

1/4" = 1' - 0" 0 1' 5' 10' 15'

SYM	DESCRIPTION	DATE	APPR

NAVFAC

LICENSED PROFESSIONAL ENGINEER
JITENDRA VALMIK
062-072817
OF ILLINOIS
EXP: 11/30/2027
SIGNED: 03/11/2026 M.A.

ASMD LLC.
A/E INFO

APPROVED

FOR COMMANDER NAVFAC

ACTIVITY
NATHANIEL PYRON, MILCON PLANNER, DPPH

SATISFACTORY TO DATE 3/10/2026

DES JV | DRW AL | CHK AP

PM/DM DKS/DMK

BRANCH MANAGER KYM

CHIEF ENG/ARCH KYM

FIRE PROTECTION RYO

DEPARTMENT OF THE NAVY
NAVFAC PACIFIC
NAVAL FACILITIES ENGINEERING SYSTEMS COMMAND ~ PACIFIC
NAVAL FACILITIES ENGINEERING SYSTEMS COMMAND
MAKALAPA, HAWAII
U.S. NAVSUPPACT
MCB CAMP BLAZ, GUAM
JFY 2022 PROJECT J-875
BATTLE STAFF TRAINING FACILITY
PLUMBING PLAN - BELOW FIRST FLOOR - AREA 'F'

SCALE: 1/4" = 1'-0"

EPROJECT NO.: 1696746

CONSTR. CONTR. NO.

NAVFAC DRAWING NO.
17322055

SHEET 225 OF 468

PL106

DRAWFORM REVISION: 25 AUGUST 2020

3/11/2026 4:56:15 PM PL106
C:\REVIT_2024_PROJECT_FILES\BLDG-J-875-1696746-P_7542_Jon_Koenig.rvt

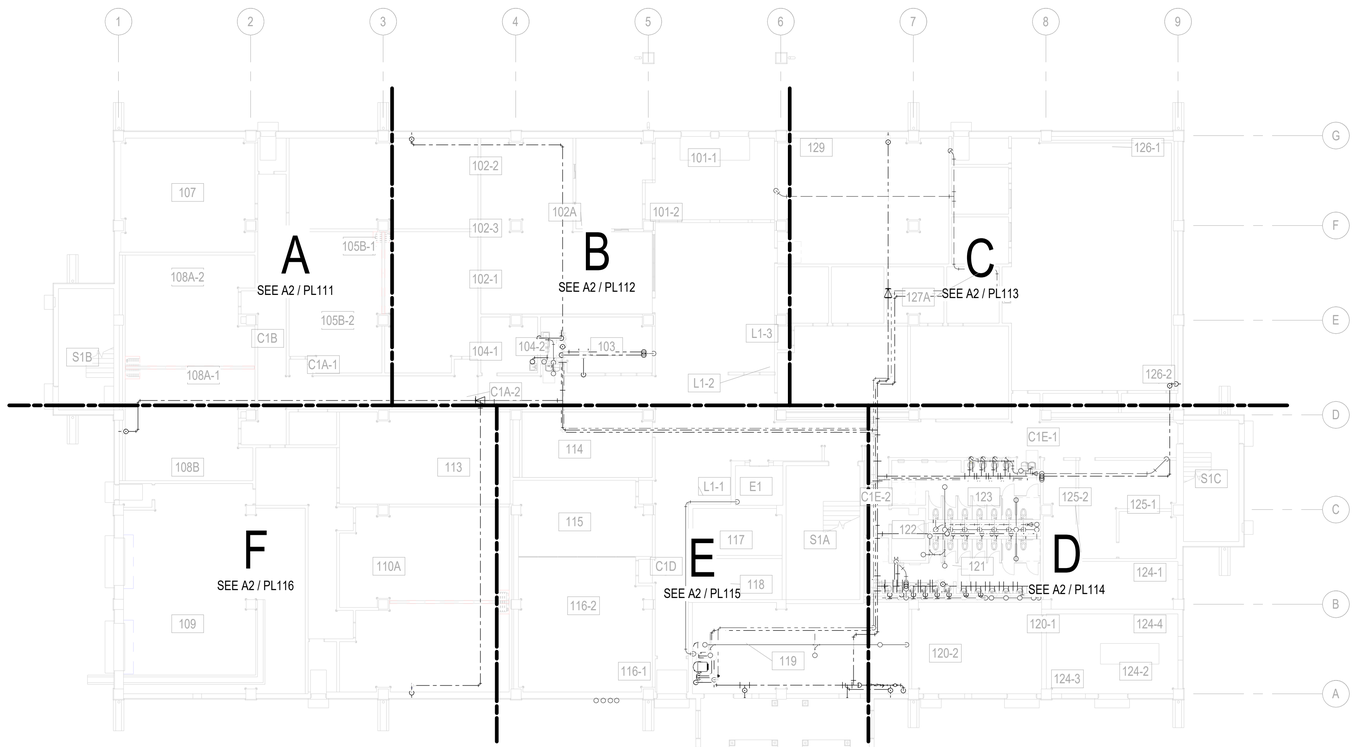

B2 COMPOSITE PLUMBING PLAN - FIRST FLOOR

1/16" = 1'-0"

GENERAL NOTES

ROOM LEGEND - FIRST FLOOR

NO.	NAME
101-1	ENTRY VESTIBULE-1
101-2	ENTRY VESTIBULE-2
102-1	TA - HQ CAMP COMMANDANT-1
102-2	TA - HQ CAMP COMMANDANT-2
102-3	TA - HQ CAMP COMMANDANT-3
102A	ENTRY CONTROL POINT
103	BREAK RM
104-1	NURSING RM-1
104-2	NURSING RM-2
105B-1	TA - G3 FOPS-1
105B-2	TA - G3 FOPS-2

NO.	NAME
107	TA - G4 LOGISTICS
108A-1	TA - G2 COLLECTIONS AND ANALYSIS-1
108A-2	TA - G2 COLLECTIONS AND ANALYSIS-2
108B	TA - G2 COLLECTIONS AND ANALYSIS
109	INTERIOR COC TRAINING PAD
110A	TA - G3 STRIKE CELL
113	TA - G3 FIRES
114	SVTC CONF RM / SIPR CAFE
115	GTR 1
116-1	GTR 1T (TRAINING TELECOMM RM)-1
116-2	GTR 1T (TRAINING TELECOMM RM)-2

NO.	NAME
117	ELEV MACHINE RM
118	CTR 1
119	MECH RM
120-1	ELEC RM-1
120-2	ELEC RM-2
121	MEN
122	JAN
123	WOMEN
124-1	TRAINING MATERIAL STORAGE-1
124-2	TRAINING MATERIAL STORAGE-2
124-3	TRAINING MATERIAL STORAGE-3
124-4	TRAINING MATERIAL STORAGE-4
125-1	TA - MEDICAL CELL-1

NO.	NAME
125-2	TA - MEDICAL CELL-2
126-1	TA - COC WATCH FLOOR-1
126-2	TA - COC WATCH FLOOR-2
127A	OFFICE
129	TA - G5 PLANS
C1A-1	CORRIDOR 1A-1
C1A-2	CORRIDOR 1A-2
C1B	CORRIDOR 1B
C1D	CORRIDOR 1D
C1E-1	CORRIDOR 1E-1
C1E-2	CORRIDOR 1E-2
E1	ELEV 1
L1-1	LOBBY 1-1

NO.	NAME
L1-2	LOBBY 1-2
L1-3	LOBBY 1-3
S1A	STAIR 1A
S1B	STAIR 1B
S1C	STAIR 1C

KEY PLAN

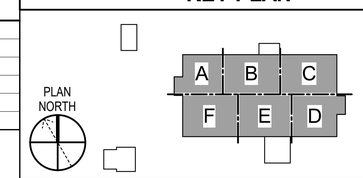

GRAPHIC SCALE(S)

1/16" = 1' - 0" 0 5' 10' 20' 30' 60'

SYM	DESCRIPTION	DATE	APPR

NAVFAC

LICENSED PROFESSIONAL ENGINEER JITENDRA VALMIK 062-072817 OF ILLINOIS
EXP: 11/30/2027
SIGNED: 03/11/2026 M.A.

ASMD LLC.
A/E INFO

APPROVED
FOR COMMANDER NAVFAC
ACTIVITY
NATHANIEL PYRON, MILCON PLANNER, DPPH
SATISFACTORY TO DATE 3/10/2026
DES JV DRW AL CHK AP
PM/DM DKS/DMK
BRANCH MANAGER KYM
CHIEF ENG/ARCH KYM
FIRE PROTECTION RYO

DEPARTMENT OF THE NAVY
NAVFAC PACIFIC
U.S. NAVSUPPACT
NAVAL FACILITIES ENGINEERING SYSTEMS COMMAND
NAVAL FACILITIES ENGINEERING SYSTEMS COMMAND ~ PACIFIC
MAKALAPA, HAWAII
MCB CAMP BLAZ, GUAM
JFY 2022 PROJECT J-875
BATTLE STAFF TRAINING FACILITY
COMPOSITE PLUMBING PLAN - FIRST FLOOR

SCALE: 1/16" = 1'-0"
EPROJECT NO.: 1696746
CONSTR. CONTR. NO.
NAVFAC DRAWING NO.
17322056
SHEET 226 OF 468
PL110
DRAWFORM REVISION: 25 AUGUST 2020

3/11/2026 4:56:20 PM PL110
C:\REVIT_2021_PROJECT_FILES\BLDG-J875-1696746-P_7542_Jon_Koenig.rvt

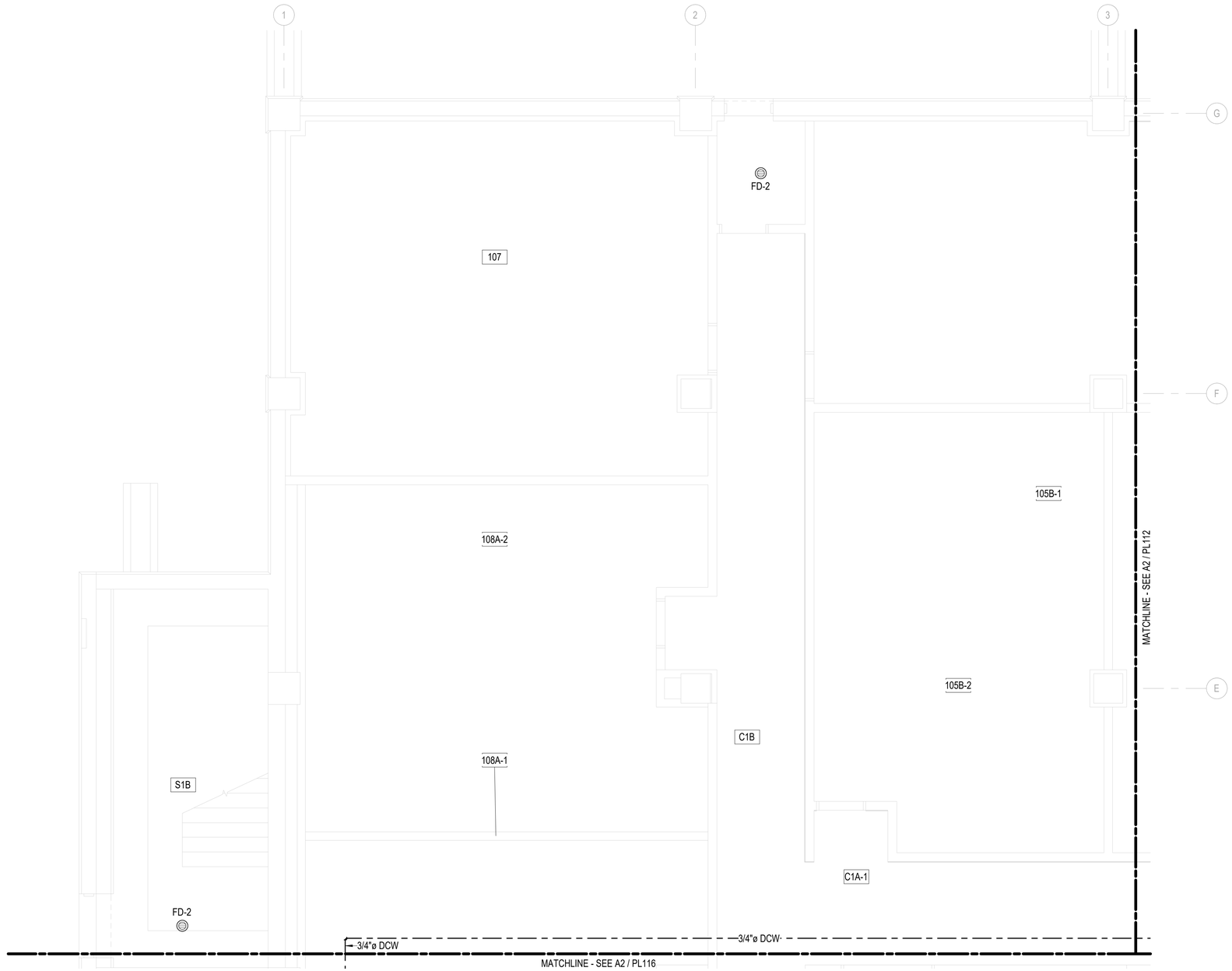

A2 PLUMBING PLAN - FIRST FLOOR - AREA 'A'

1/4" = 1'-0"

GENERAL NOTES

ROOM LEGEND - FIRST FLOOR AREA 'A'

NO.	NAME
105B-1	TA - G3 FOPS-1
105B-2	TA - G3 FOPS-2
107	TA - G4 LOGISTICS
108A-1	TA - G2 COLLECTIONS AND ANALYSIS-1
108A-2	TA - G2 COLLECTIONS AND ANALYSIS-2
C1A-1	CORRIDOR 1A-1
C1A-2	CORRIDOR 1A-2
C1B	CORRIDOR 1B
S1B	STAIR 1B

KEY PLAN

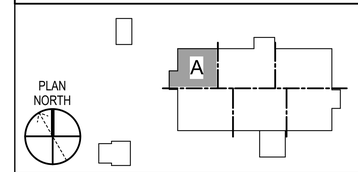

GRAPHIC SCALE(S)

1/4" = 1' - 0" 0 1' 5' 10' 15'

SYM	DESCRIPTION	DATE	APPR

NAVFAC

LICENSED PROFESSIONAL ENGINEER
JITENDRA VALMIK
062-072817
OF ILLINOIS
EXP: 11/30/2027
SIGNED: 03/11/2026 M.A.

ASMD LLC.
A/E INFO

APPROVED
FOR COMMANDER NAVFAC
ACTIVITY
NATHANIEL PYRON, MILCON PLANNER, DPPH
SATISFACTORY TO DATE 3/10/2026
DES JV DRW AL CHK AP
PM/DM DKS/DMK
BRANCH MANAGER KYM
CHIEF ENG/ARCH KYM
FIRE PROTECTION RYO

DEPARTMENT OF THE NAVY
NAVFAC PACIFIC
NAVAL FACILITIES ENGINEERING SYSTEMS COMMAND
NAVAL FACILITIES ENGINEERING SYSTEMS COMMAND ~ PACIFIC
MAKALAPA, HAWAII
U.S. NAVSUPPACT
MCB CAMP BLAZ, GUAM
JFY 2022 PROJECT J-875
BATTLE STAFF TRAINING FACILITY
PLUMBING PLAN - FIRST FLOOR - AREA 'A'

SCALE: 1/4" = 1'-0"
EPROJECT NO.: 1696746
CONSTR. CONTR. NO.
NAVFAC DRAWING NO. 17322057
SHEET 227 OF 468
PL111

DRAWFORM REVISION: 25 AUGUST 2020

3/11/2026 4:56:23 PM PL111
C:\REVIT_2024_PROJECT_FILES\BLDG-J875-1696746-P_7542_Jon_Koenig.rvt

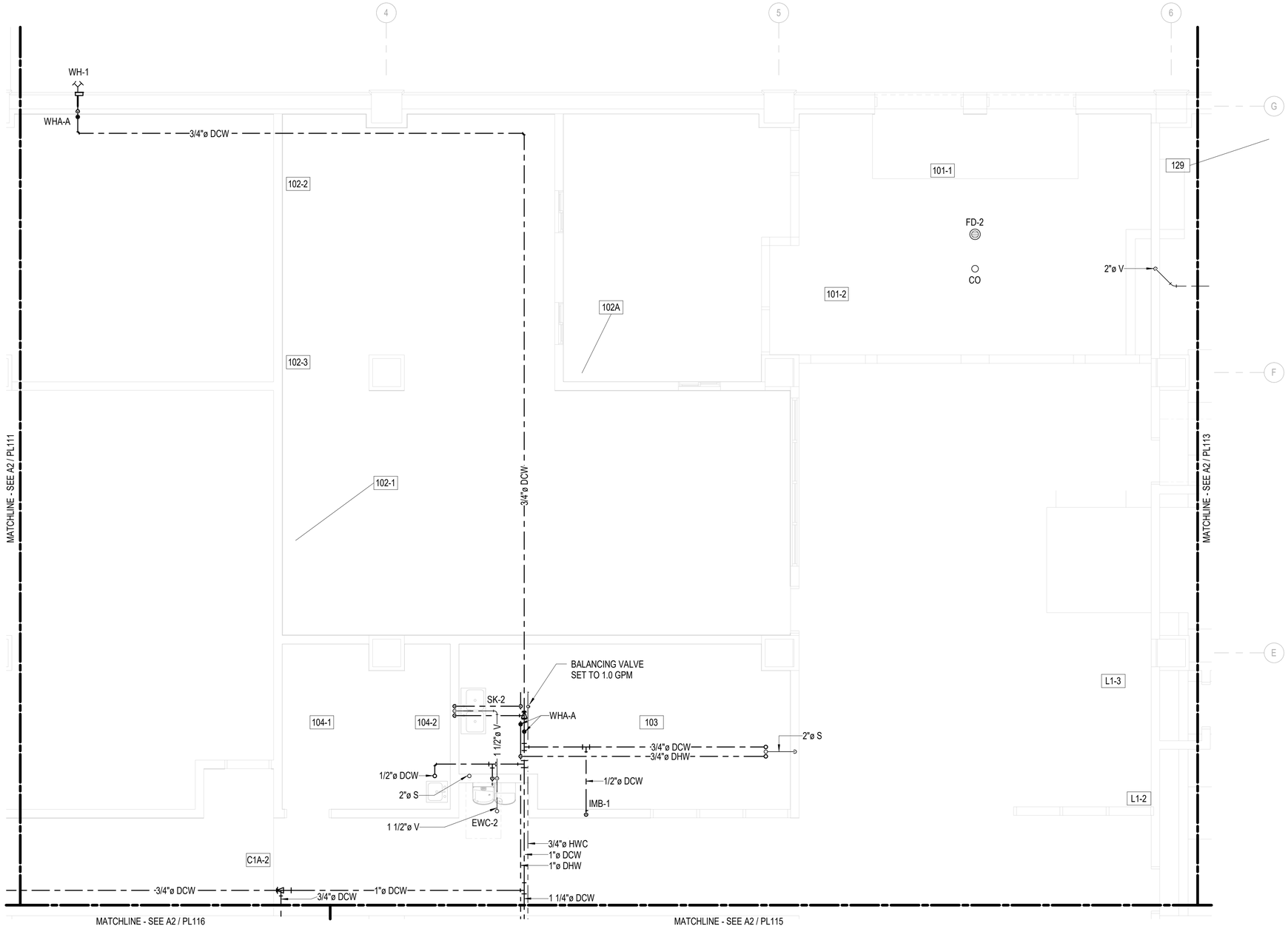

A2 PLUMBING PLAN - FIRST FLOOR - AREA 'B'

1/4" = 1'-0"

GENERAL NOTES

ROOM LEGEND - FIRST FLOOR AREA 'B'

NO.	NAME
101-1	ENTRY VESTIBULE-1
101-2	ENTRY VESTIBULE-2
102-1	TA - HQ CAMP COMMANDANT-1
102-2	TA - HQ CAMP COMMANDANT-2
102-3	TA - HQ CAMP COMMANDANT-3
102A	ENTRY CONTROL POINT
103	BREAK RM
104-1	NURSING RM-1
104-2	NURSING RM-2
105B-1	TA - G3 FOPS-1
127A	OFFICE
129	TA - G5 PLANS
C1A-2	CORRIDOR 1A-2
L1-2	LOBBY 1-2
L1-3	LOBBY 1-3

KEY PLAN

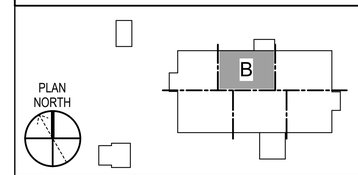

GRAPHIC SCALE(S)

1/4" = 1' - 0" 0 1' 5' 10' 15'

SYM	DESCRIPTION	DATE	APPR

NAVFAC

LICENSED PROFESSIONAL ENGINEER
JITENDRA VALMIK
062-072817
OF ILLINOIS
EXP: 11/30/2027
SIGNED: 03/11/2026 M.A.

ASMD LLC.
A/E INFO

APPROVED
FOR COMMANDER NAVFAC
ACTIVITY
NATHANIEL PYRON, MILCON PLANNER, DPPH
SATISFACTORY TO DATE 3/10/2026

DES	JV	DRW	AL	CHK	AP
PM/DM	DKS/DMK				
BRANCH MANAGER	KYM				
CHIEF ENG/ARCH	KYM				
FIRE PROTECTION	RYO				

DEPARTMENT OF THE NAVY
NAVFAC PACIFIC
NAVAL FACILITIES ENGINEERING SYSTEMS COMMAND
NAVAL FACILITIES ENGINEERING SYSTEMS COMMAND ~ PACIFIC
MAKALAPA, HAWAII
U.S. NAVSUPPACT
MCB CAMP BLAZ, GUAM
JFY 2022 PROJECT J-875
BATTLE STAFF TRAINING FACILITY
PLUMBING PLAN - FIRST FLOOR - AREA 'B'

SCALE: 1/4" = 1'-0"
EPROJECT NO.: 1696746
CONSTR. CONTR. NO.
NAVFAC DRAWING NO. 17322058
SHEET 228 OF 468
PL112
DRAWFORM REVISION: 25 AUGUST 2020

3/11/2026 4:56:27 PM PL112
C:\REVIT_2024_PROJECT_FILES\BLDG-J-875-1696746-P_7542_Jon_Koenig.rvt

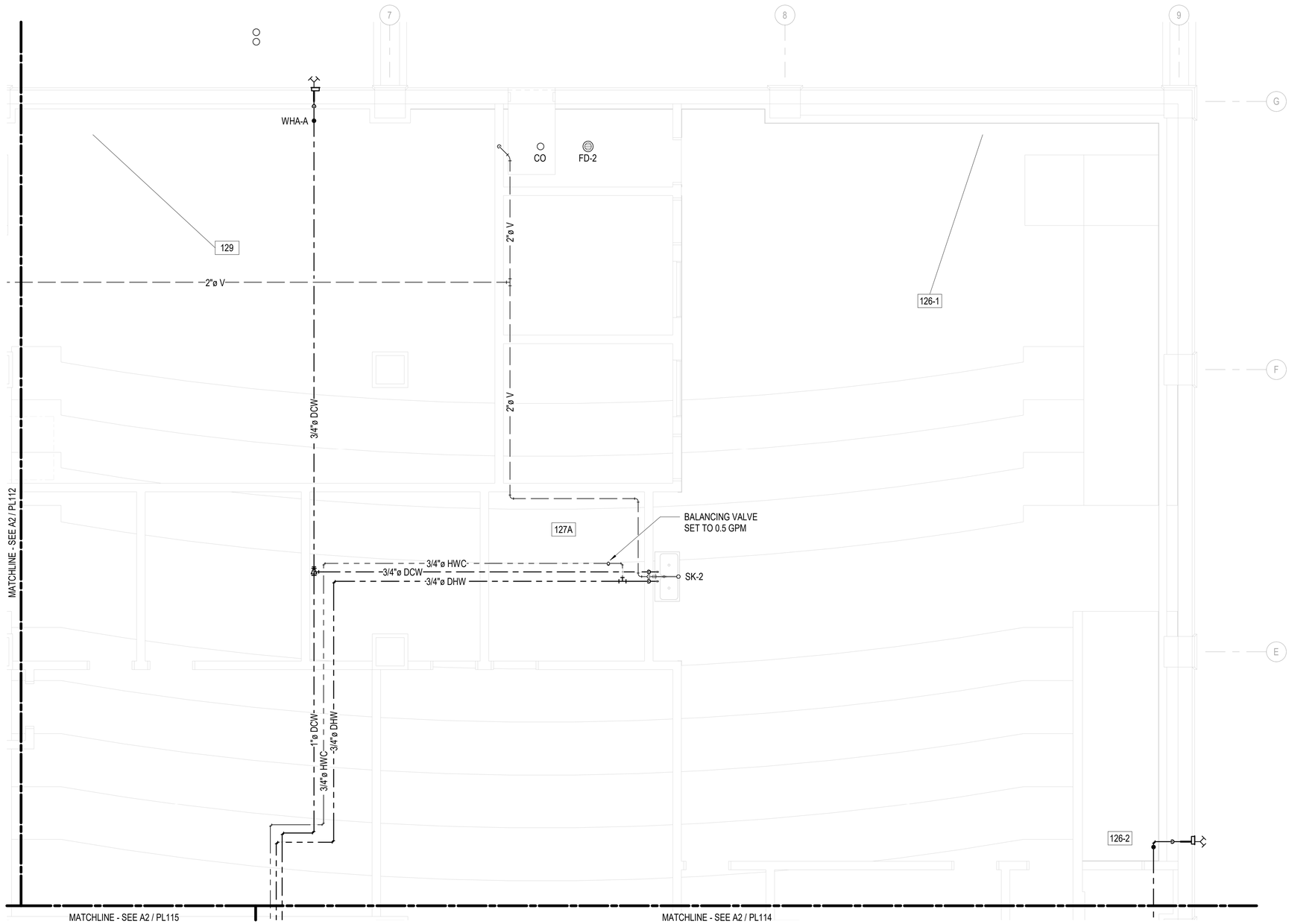

A2 PLUMBING PLAN - FIRST FLOOR - AREA 'C'

1/4" = 1'-0"

GENERAL NOTES

ROOM LEGEND - FIRST FLOOR AREA 'C'

NO.	NAME
126-1	TA - COC WATCH FLOOR-1
126-2	TA - COC WATCH FLOOR-2
127A	OFFICE
129	TA - G5 PLANS

KEY PLAN

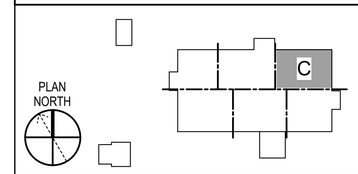

GRAPHIC SCALE(S)

1/4" = 1' - 0" 0 1' 5' 10' 15'

SYM	DESCRIPTION	DATE	APPR

NAVFAC

LICENSED PROFESSIONAL ENGINEER
JITENDRA VALMIK
062-072817
OF ILLINOIS
EXP: 11/30/2027
SIGNED: 03/11/2026 M.A.

ASMD LLC.
A/E INFO

APPROVED
FOR COMMANDER NAVFAC
ACTIVITY
NATHANIEL PYRON, MILCON PLANNER, DPPH
SATISFACTORY TO DATE 3/10/2026
DES JV DRW AL CHK AP
PMDM DKS/DMK
BRANCH MANAGER KYM
CHIEF ENG/ARCH KYM
FIRE PROTECTION RYO

DEPARTMENT OF THE NAVY
NAVFAC PACIFIC
NAVAL FACILITIES ENGINEERING SYSTEMS COMMAND ~ PACIFIC
NAVAL FACILITIES ENGINEERING SYSTEMS COMMAND
MAKALAPA, HAWAII
U.S. NAVSUPPACT
MCB CAMP BLAZ, GUAM
JFY 2022 PROJECT J-875
BATTLE STAFF TRAINING FACILITY
PLUMBING PLAN - FIRST FLOOR - AREA 'C'

SCALE: 1/4" = 1'-0"
EPROJECT NO.: 1696746
CONSTR. CONTR. NO.
NAVFAC DRAWING NO. 17322059
SHEET 229 OF 468
PL113

DRAWFORM REVISION: 25 AUGUST 2020

3/11/2026 4:58:31 PM PL113
C:\REVIT_2024_PROJECT_FILES\BLDG-J-875-1696746-P_7542_Jon_Koenig.rvt

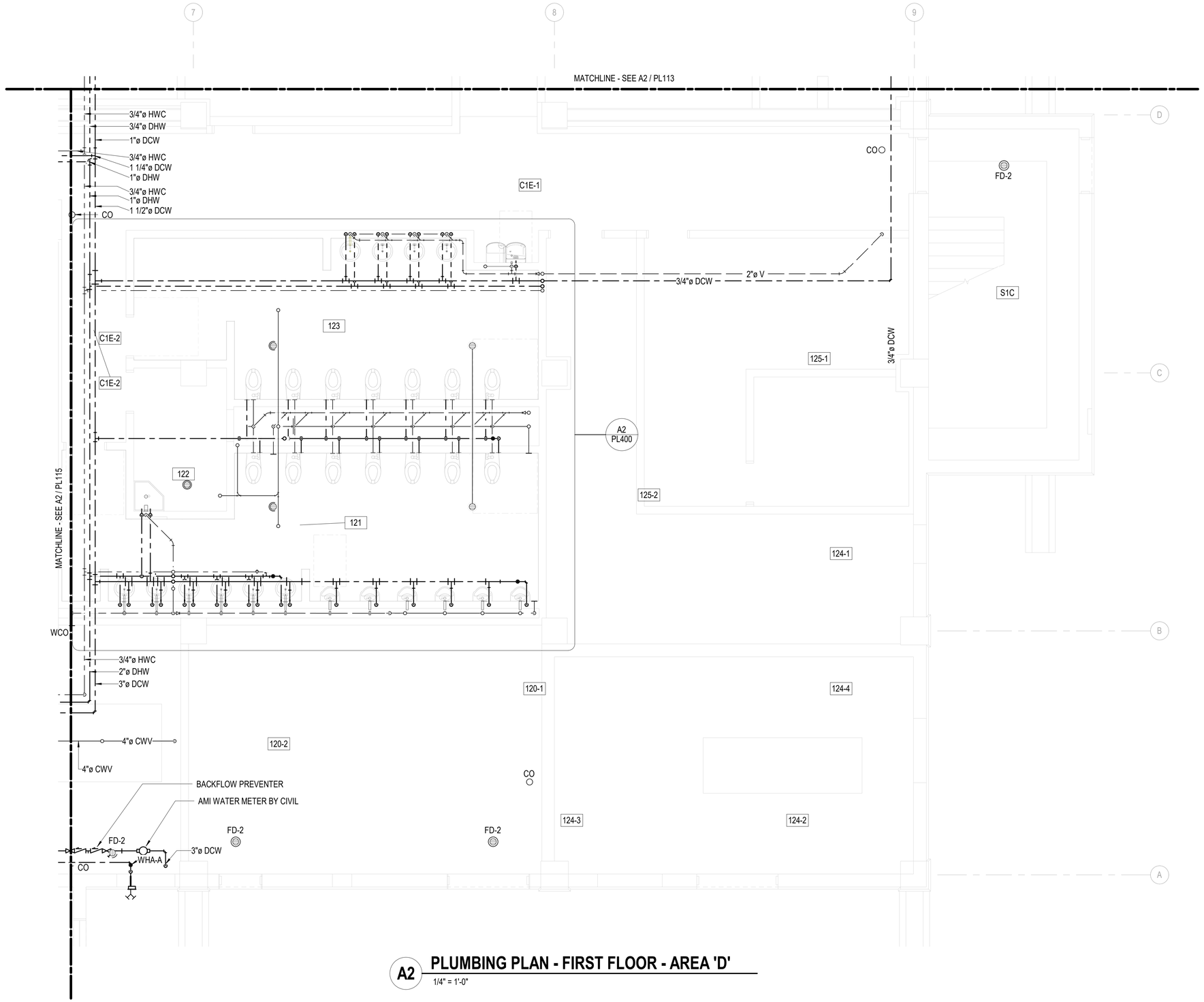

A2 PLUMBING PLAN - FIRST FLOOR - AREA 'D'

1/4" = 1'-0"

GENERAL NOTES

ROOM LEGEND - FIRST FLOOR AREA 'D'

NO.	NAME
119	MECH RM
120-1	ELEC RM-1
120-2	ELEC RM-2
121	MEN
122	JAN
123	WOMEN
124-1	TRAINING MATERIAL STORAGE-1
124-2	TRAINING MATERIAL STORAGE-2
124-3	TRAINING MATERIAL STORAGE-3
124-4	TRAINING MATERIAL STORAGE-4
125-1	TA - MEDICAL CELL-1
125-2	TA - MEDICAL CELL-2
127A	OFFICE
C1E-1	CORRIDOR 1E-1
C1E-2	CORRIDOR 1E-2
L1-2	LOBBY 1-2
S1C	STAIR 1C

KEY PLAN

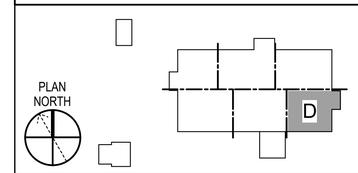

GRAPHIC SCALE(S)

1/4" = 1' - 0"

0 1' 5' 10' 15'

SYM	DESCRIPTION	DATE	APPR

NAVFAC

LICENSED PROFESSIONAL ENGINEER
JITENDRA VALMIK
062-072817
STATE OF ILLINOIS
EXP: 11/30/2027
SIGNED: 03/11/2026

ASMD LLC.
A/E INFO

APPROVED

FOR COMMANDER NAVFAC

ACTIVITY
NATHANIEL PYRON, MILCON PLANNER, DPPH

SATISFACTORY TO DATE 3/10/2026

DES JV DRW AL CHK AP

PM/DM DKS/DMK

BRANCH MANAGER KYM

CHIEF ENG/ARCH KYM

FIRE PROTECTION RYO

DEPARTMENT OF THE NAVY
NAVFAC PACIFIC
U.S. NAVSUPPACT

NAVAL FACILITIES ENGINEERING SYSTEMS COMMAND
NAVAL FACILITIES ENGINEERING SYSTEMS COMMAND ~ PACIFIC
MAKALAPA, HAWAII

MCB CAMP BLAZ, GUAM

JFY 2022 PROJECT J-875
BATTLE STAFF TRAINING FACILITY

PLUMBING PLAN - FIRST FLOOR - AREA 'D'

SCALE: 1/4" = 1'-0"

EPROJECT NO.: 1696746

CONSTR. CONTR. NO.

NAVFAC DRAWING NO.
17322060

SHEET 230 OF 468

PL114

DRAWFORM REVISION: 25 AUGUST 2020

3/11/2026 4:56:36 PM PL114
C:\REVIT_2024_PROJECT_FILES\BLDG-J-875-1696746-P_7542_Jon_Koenig.rvt

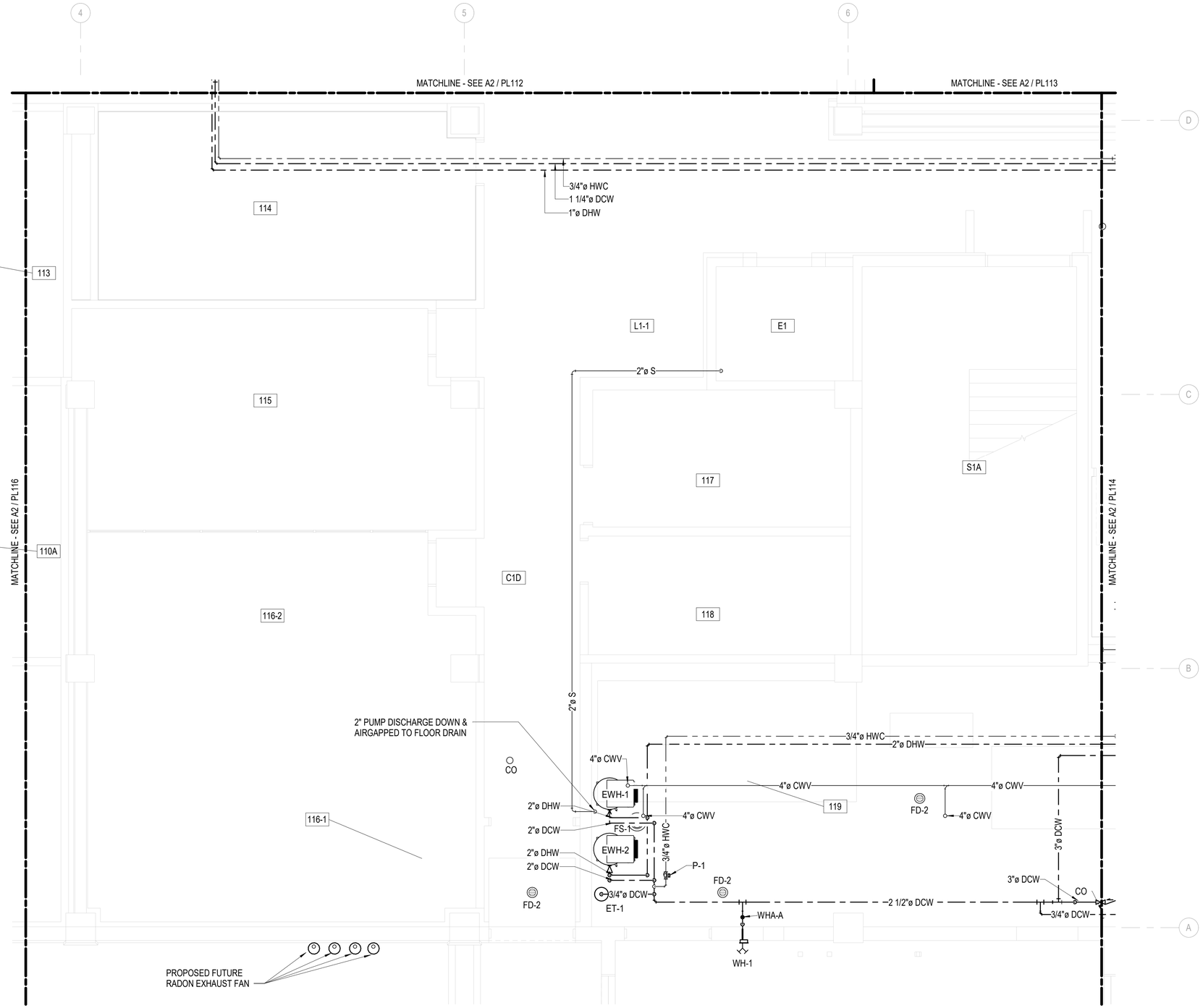

A2 **PLUMBING PLAN - FIRST FLOOR - AREA 'E'**

1/4" = 1'-0"

GENERAL NOTES

ROOM LEGEND - FIRST FLOOR AREA 'E'

NO.	NAME
110A	TA - G3 STRIKE CELL
113	TA - G3 FIRES
114	SVTC CONF RM / SIPR CAFE
115	GTR 1
116-1	GTR 1T (TRAINING TELECOMM RM)-1
116-2	GTR 1T (TRAINING TELECOMM RM)-2
117	ELEV MACHINE RM
118	CTR 1
119	MECH RM
C1D	CORRIDOR 1D
E1	ELEV 1
L1-1	LOBBY 1-1
L1-2	LOBBY 1-2
S1A	STAIR 1A

KEY PLAN

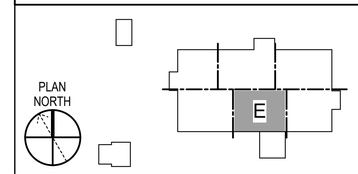

GRAPHIC SCALE(S)

1/4" = 1' - 0" 0 1' 5' 10' 15'

SYM	DESCRIPTION	DATE	APPR

NAVFAC

LICENSED PROFESSIONAL ENGINEER
JITENDRA VALMIK
062-072817
OF ILLINOIS
EXP: 11/30/2027
SIGNED: 03/11/2026

ASMD LLC.
A/E INFO

APPROVED
FOR COMMANDER NAVFAC
ACTIVITY
NATHANIEL PYRON, MILCON PLANNER, DPPH
SATISFACTORY TO DATE 3/10/2026
DES JV DRW AL CHK AP
PM/DM DKS/DMK
BRANCH MANAGER KYM
CHIEF ENG/ARCH KYM
FIRE PROTECTION RYO

DEPARTMENT OF THE NAVY
NAVFAC PACIFIC
U.S. NAVSUPPACT
NAVAL FACILITIES ENGINEERING SYSTEMS COMMAND
NAVAL FACILITIES ENGINEERING SYSTEMS COMMAND ~ PACIFIC
MAKALAPA, HAWAII
MCB CAMP BLAZ, GUAM
JFY 2022 PROJECT J-875
BATTLE STAFF TRAINING FACILITY
PLUMBING PLAN - FIRST FLOOR - AREA 'E'

SCALE: 1/4" = 1'-0"
EPROJECT NO.: 1696746
CONSTR. CONTR. NO.
NAVFAC DRAWING NO. 17322061
SHEET 231 OF 468
PL115

DRAWFORM REVISION: 25 AUGUST 2020

3/11/2026 4:56:40 PM PL115
C:\REVIT_2024_PROJECT_FILES\BLDG-J-875-1696746-P_7542_Jon_Koenig.rvt

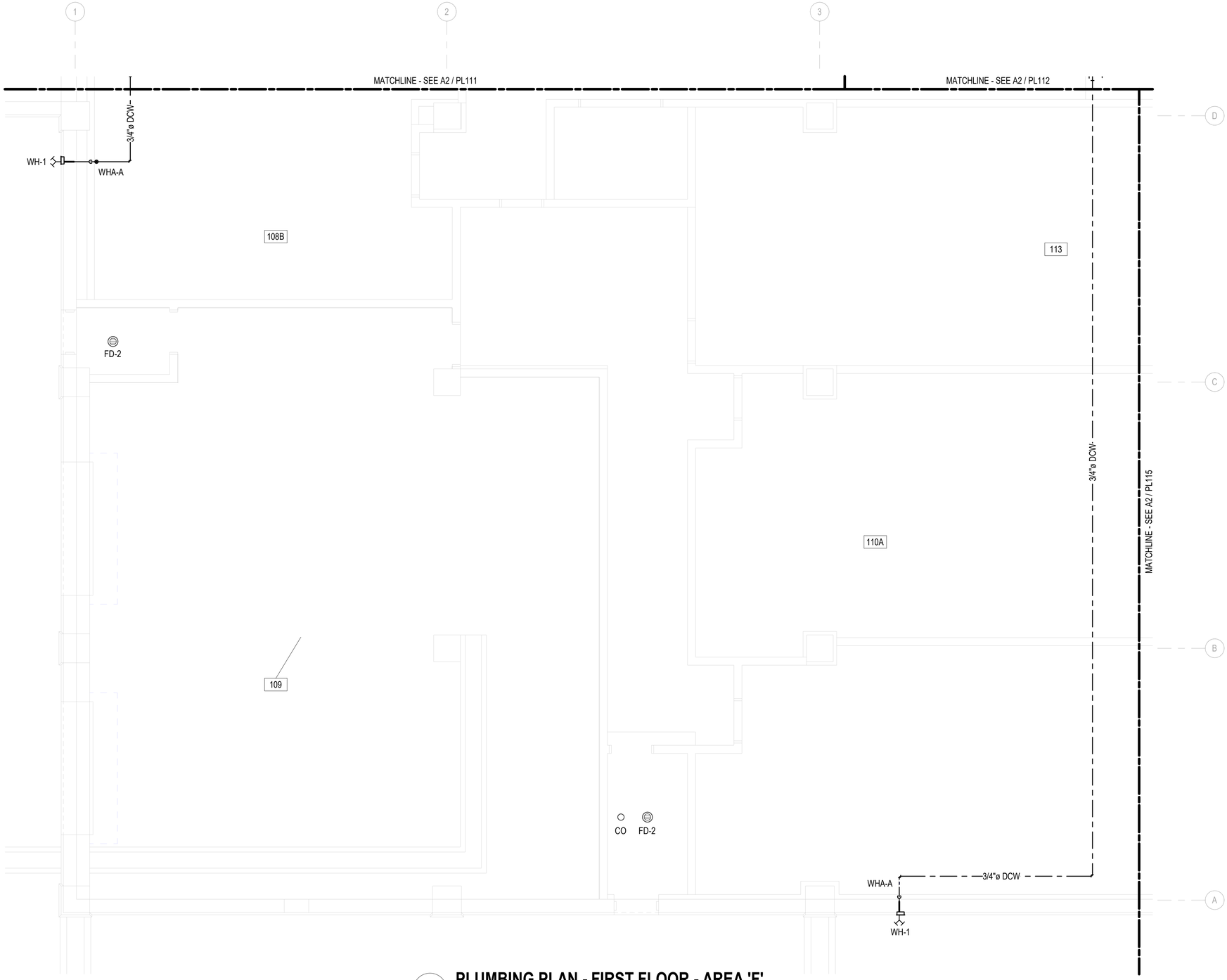

A2 PLUMBING PLAN - FIRST FLOOR - AREA 'F'

1/4" = 1'-0"

GENERAL NOTES

ROOM LEGEND - FIRST FLOOR AREA 'F'

NO.	NAME
108A-1	TA - G2 COLLECTIONS AND ANALYSIS-1
108B	TA - G2 COLLECTIONS AND ANALYSIS
109	INTERIOR COC TRAINING PAD
110A	TA - G3 STRIKE CELL
113	TA - G3 FIRES
C1A-2	CORRIDOR 1A-2
C1B	CORRIDOR 1B

KEY PLAN

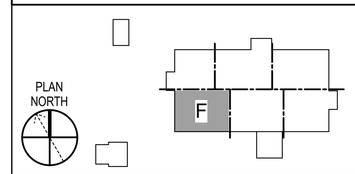

GRAPHIC SCALE(S)

1/4" = 1' - 0" 0 1' 5' 10' 15'

SYM	DESCRIPTION	DATE	APPR

LICENSED PROFESSIONAL ENGINEER
JITENDRA VALMIK
062-072817
OF ILLINOIS
EXP: 11/30/2027
SIGNED: 03/11/2026 M.A.

APPROVED

FOR COMMANDER NAVFAC

ACTIVITY
NATHANIEL PYRON, MILCON PLANNER, DPPH

SATISFACTORY TO DATE 3/10/2026

DES JV | DRW AL | CHK AP

PM/DM DKS/DMK

BRANCH MANAGER KYM

CHIEF ENG/ARCH KYM

FIRE PROTECTION RYO

DEPARTMENT OF THE NAVY
NAVAL FACILITIES ENGINEERING SYSTEMS COMMAND ~ PACIFIC
NAVFAC PACIFIC
NAVAL FACILITIES ENGINEERING SYSTEMS COMMAND
MAKALAPA, HAWAII
U.S. NAVSUPPACT
MCB CAMP BLAZ, GUAM

JFY 2022 PROJECT J-875
BATTLE STAFF TRAINING FACILITY

PLUMBING PLAN - FIRST FLOOR - AREA 'F'

SCALE: 1/4" = 1'-0"

EPROJECT NO.: 1696746

CONSTR. CONTR. NO.

NAVFAC DRAWING NO. 17322062

SHEET 232 OF 468

PL116

DRAWFORM REVISION: 25 AUGUST 2020

3/11/2026 4:56:44 PM PL116
C:\REVIT_2024_PROJECT_FILES\BLDG-J-875-1696746-P_7542_Jon_Koenig.rvt

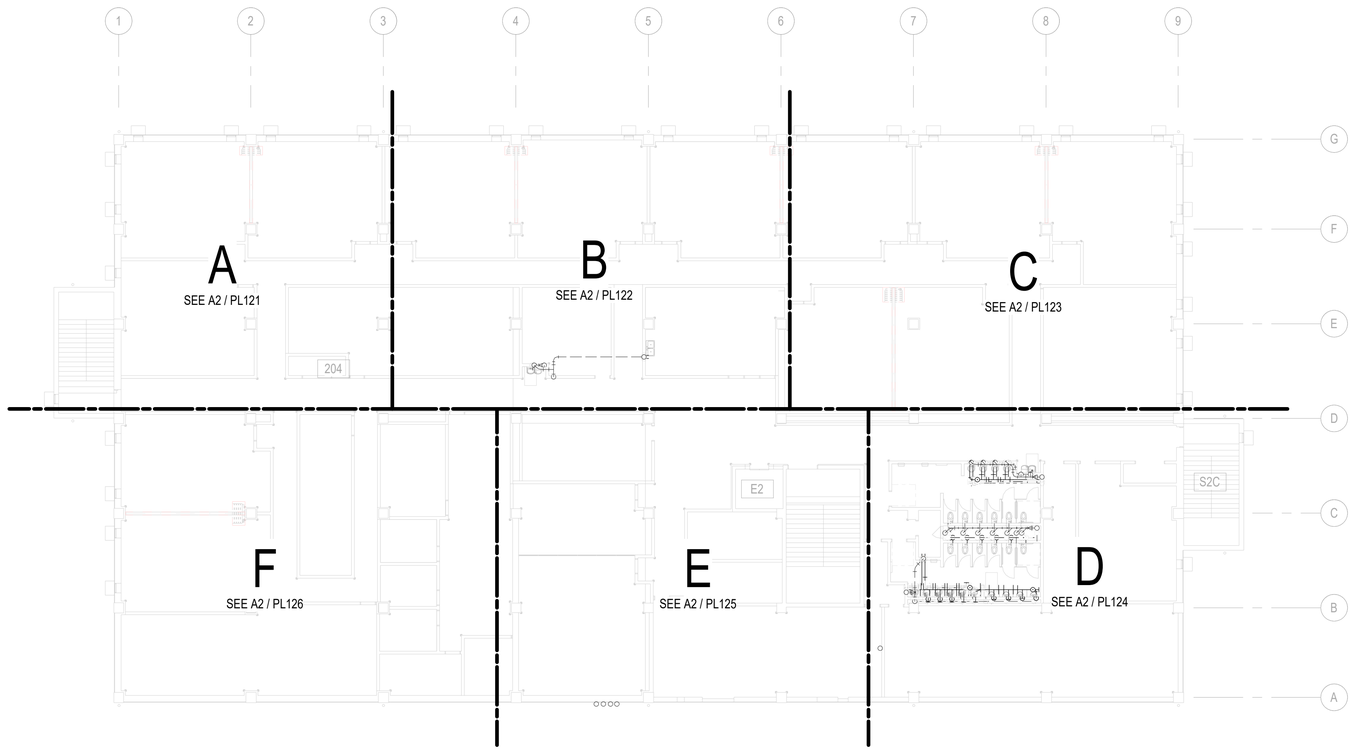

B2 COMPOSITE PLUMBING PLAN - SECOND FLOOR

1/16" = 1'-0"

GENERAL NOTES

ROOM LEGEND - SECOND FLOOR

NO.	NAME
126-1	TA - COC WATCH FLOOR-1
127A	OFFICE
129	TA - G5 PLANS
201-1	BREAK RM-1
201-2	BREAK RM-2
202	PRINT RM
203	TECG - ADMIN CELL AND LOGISTICS SECTION
204	ELEC CLOSET
205A	INTEL CONTROL CELL
205B-1	INTEL CONTROL CELL-1
205B-2	INTEL CONTROL CELL-2

NO.	NAME
206A	OPPOSING FORCES CONTROL CELL
206B	OPPOSING FORCES CONTROL CELL
207	TA - G9 EXPERIMENTATION
208A-1	TA - TECHCON-1
208A-2	TA - TECHCON-2
208B-1	TA - TECHCON-1
208B-2	TA - TECHCON-2
209-1	SIM TECH CONTROL JLVC / MCVP-1
209-2	SIM TECH CONTROL JLVC / MCVP-2

NO.	NAME
209-3	SIM TECH CONTROL JLVC / MCVP-3
210-1	TRAINING MATERIAL STORAGE-1
210-2	TRAINING MATERIAL STORAGE-2
211-1	TECG OFFICE / CONF RM-1
211-2	TECG OFFICE / CONF RM-2
211-3	TECG OFFICE / CONF RM-3
211-4	TECG OFFICE / CONF RM-4
211B	OFFICE
211F	OFFICE
212	SVTC CONF RM / SIPR CAFE
213	GTR 2
214	GTR 2T (TRAINING TELECOMM RM)
215	STORAGE

NO.	NAME
216	CTR 2
217	MECH RM
218	TRAINING MATERIAL STORAGE
219	MEN
221	WOMEN
222	TA - G6 PRIMARY
223	ELEC CLOSET
227B-1	JFACC / AVIATION OPS CENTER-1
227B-2	JFACC / AVIATION OPS CENTER-2
227B-3	JFACC / AVIATION OPS CENTER-3

NO.	NAME
C2A-1	CORRIDOR 2A-1
C2A-2	CORRIDOR 2A-2
C2B	CORRIDOR 2B
C2D-1	CORRIDOR 2D-1
C2D-2	CORRIDOR 2D-2
C2D-3	CORRIDOR 2D-3
E2	ELEV 2
L2-1	LOBBY 2-1
L2-2	LOBBY 2-2
S2A	STAIR 2A
S2B	STAIR 2B
S2C	STAIR 2C
V2A	VESTIBULE 2A
V2B	VESTIBULE 2B

KEY PLAN

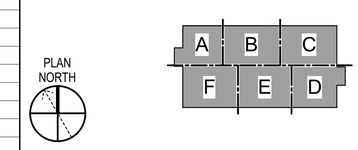

GRAPHIC SCALE(S)

1/16" = 1' - 0" 0 5' 10' 20' 30' 60'

SYM	DESCRIPTION	DATE	APPR

NAVFAC

LICENSED PROFESSIONAL ENGINEER
JITENDRA VALMIK
062-072817
STATE OF ILLINOIS
EXP: 11/30/2027
SIGNED: 03/11/2026 M.A.

ASMD LLC.
A/E INFO

APPROVED

FOR COMMANDER NAVFAC

ACTIVITY
NATHANIEL PYRON, MILCON PLANNER, DPPH

SATISFACTORY TO DATE 3/10/2026

DES JV | DRW AL | CHK AP

PM/DM DKS/DMK

BRANCH MANAGER KYM

CHIEF ENG/ARCH KYM

FIRE PROTECTION RYO

DEPARTMENT OF THE NAVY
NAVFAC PACIFIC
NAVAL FACILITIES ENGINEERING SYSTEMS COMMAND
NAVAL FACILITIES ENGINEERING SYSTEMS COMMAND ~ PACIFIC
MAKALAPA, HAWAII
U.S. NAVSUPPACT
MCB CAMP BLAZ, GUAM
JFY 2022 PROJECT J-875
BATTLE STAFF TRAINING FACILITY
COMPOSITE PLUMBING PLAN - SECOND FLOOR

SCALE: 1/16" = 1'-0"

EPROJECT NO.: 1696746

CONSTR. CONTR. NO.

NAVFAC DRAWING NO.
17322063

SHEET 233 OF 468

PL120

DRAWFORM REVISION: 25 AUGUST 2020

3/11/2026 4:56:48 PM PL120
C:\REVIT_2024_PROJECT_FILES\BLDG-J-875-1696746-P_7542_Jon_Koenig.rvt

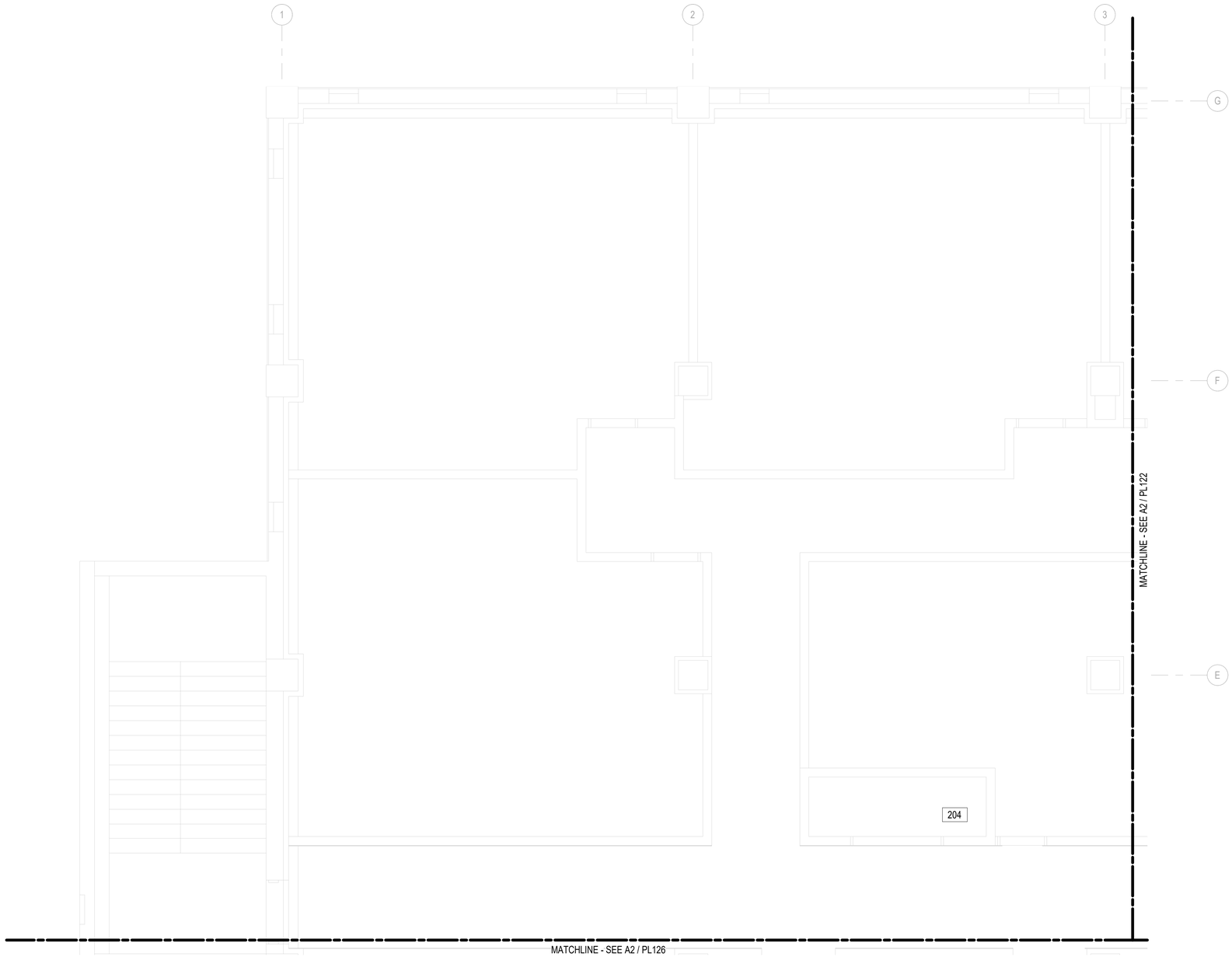

A2 PLUMBING PLAN - SECOND FLOOR - AREA 'A'

1/4" = 1'-0"

GENERAL NOTES

ROOM LEGEND - SECOND FLOOR AREA 'A'

NO.	NAME
203	TECG - ADMIN CELL AND LOGISTICS SECTION
204	ELEC CLOSET
205B-1	INTEL CONTROL CELL-1
205B-2	INTEL CONTROL CELL-2
206A	OPPOSING FORCES CONTROL CELL
206B	OPPOSING FORCES CONTROL CELL
207	TA - G9 EXPERIMENTATION
C2A-2	CORRIDOR 2A-2
C2B	CORRIDOR 2B
S2B	STAIR 2B

KEY PLAN

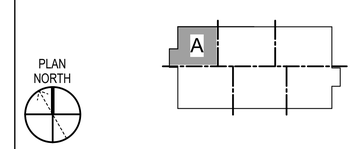

GRAPHIC SCALE(S)

1/4" = 1' - 0"

0 1' 5' 10' 15'

SYM	DESCRIPTION	DATE	APPR

NAVFAC

LICENSED PROFESSIONAL ENGINEER
JITENDRA VALMIK
062-072817
OF ILLINOIS
EXP: 11/30/2027
SIGNED: 03/11/2026 M.A.

ASMD LLC.
A/E INFO

APPROVED

FOR COMMANDER NAVFAC

ACTIVITY
NATHANIEL PYRON, MILCON PLANNER, DPPH

SATISFACTORY TO DATE 3/10/2026

DES JV DRW AL CHK AP

PM/DM DKS/DMK

BRANCH MANAGER KYM

CHIEF ENG/ARCH KYM

FIRE PROTECTION RYO

DEPARTMENT OF THE NAVY
NAVFAC PACIFIC
NAVAL FACILITIES ENGINEERING SYSTEMS COMMAND
NAVAL FACILITIES ENGINEERING SYSTEMS COMMAND ~ PACIFIC
MAKALAPA, HAWAII
U.S. NAVSUPPACT
MCB CAMP BLAZ, GUAM

JFY 2022 PROJECT J-875
BATTLE STAFF TRAINING FACILITY

PLUMBING PLAN - SECOND FLOOR - AREA 'A'

SCALE: 1/4" = 1'-0"

EPROJECT NO.: 1696746

CONSTR. CONTR. NO.

NAVFAC DRAWING NO.
17322064

SHEET 234 OF 468

PL121

DRAWFORM REVISION: 25 AUGUST 2020

3/11/2026 4:56:51 PM PL121
C:\REVIT_2024_PROJECT_FILES\BLDG-J-875-1696746-P_7542_Jon_Koenig.rvt

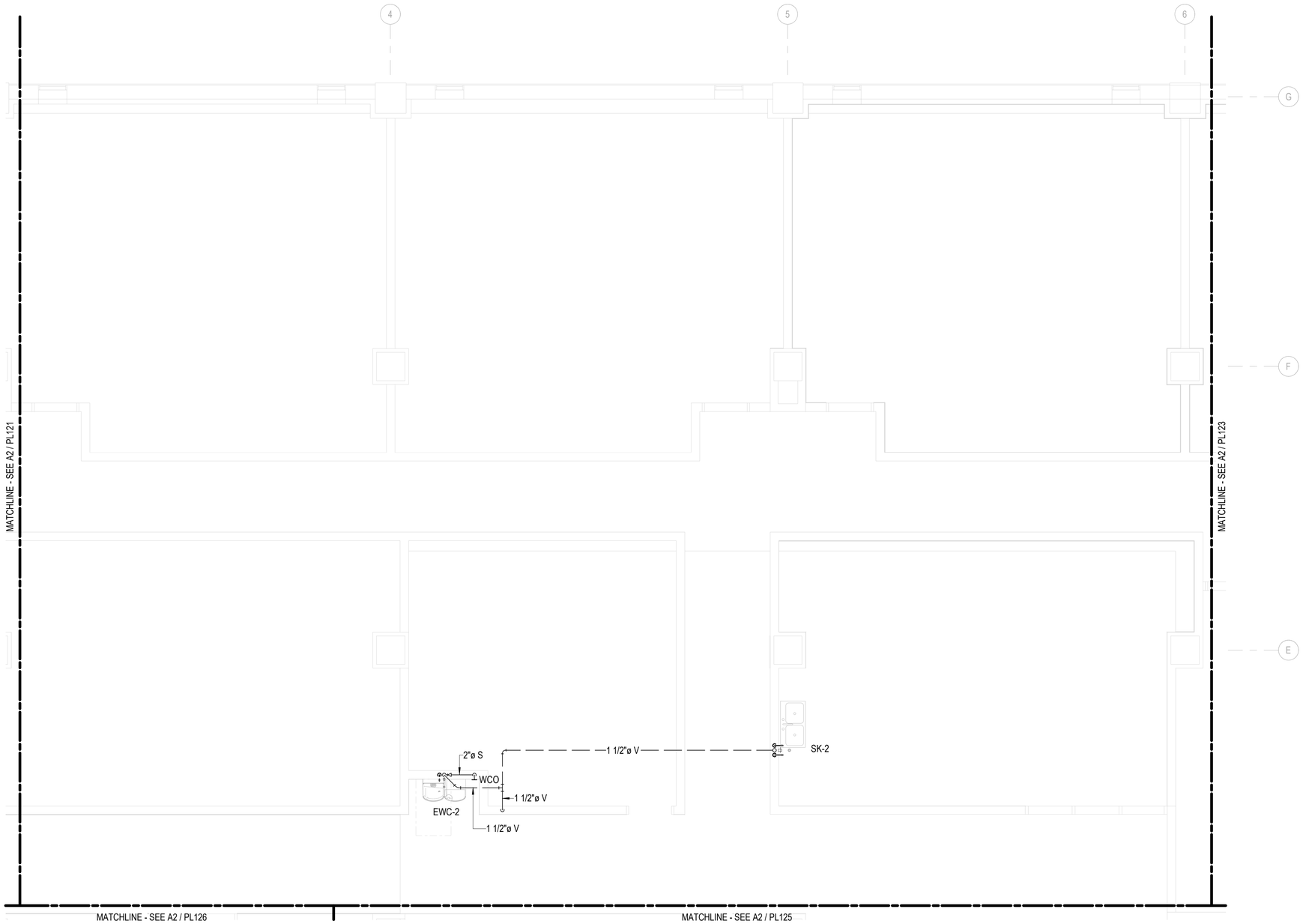

A2 PLUMBING PLAN - SECOND FLOOR - AREA 'B'

1/4" = 1'-0"

GENERAL NOTES

ROOM LEGEND - SECOND FLOOR AREA 'B'

NO.	NAME
127A	OFFICE
129	TA - G5 PLANS
201-1	BREAK RM-1
201-2	BREAK RM-2
202	PRINT RM
203	TECG - ADMIN CELL AND LOGISTICS SECTION
205A	INTEL CONTROL CELL
205B-1	INTEL CONTROL CELL-1
205B-2	INTEL CONTROL CELL-2
227B-1	JFACC / AVIATION OPS CENTER-1
227B-2	JFACC / AVIATION OPS CENTER-2
227B-3	JFACC / AVIATION OPS CENTER-3
C2A-1	CORRIDOR 2A-1
C2B	CORRIDOR 2B
L2-2	LOBBY 2-2

KEY PLAN

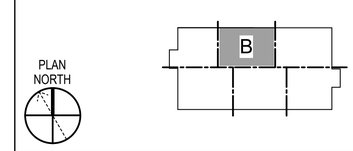

GRAPHIC SCALE(S)

1/4" = 1' - 0"

0 1' 5' 10' 15'

SYM	DESCRIPTION	DATE	APPR

NAVFAC

LICENSED PROFESSIONAL ENGINEER
JITENDRA VALMIK
062-072817
OF ILLINOIS
EXP: 11/30/2027
SIGNED: 03/11/2026 M.A.

ASMD LLC.
A/E INFO

APPROVED
FOR COMMANDER NAVFAC
ACTIVITY:
NATHANIEL PYRON, MILCON PLANNER, DPPH
SATISFACTORY TO DATE 3/10/2026

DES	JV	DRW	AL	CHK	AP
PM/DM	DKS/DMK				
BRANCH MANAGER	KYM				
CHIEF ENG/ARCH	KYM				
FIRE PROTECTION	RYO				

DEPARTMENT OF THE NAVY
NAVFAC PACIFIC
NAVAL FACILITIES ENGINEERING SYSTEMS COMMAND
U.S. NAVSUPPACT
NAVAL FACILITIES ENGINEERING SYSTEMS COMMAND ~ PACIFIC
MAKALAPA, HAWAII
MCB CAMP BLAZ, GUAM
JFY 2022 PROJECT J-875
BATTLE STAFF TRAINING FACILITY
PLUMBING PLAN - SECOND FLOOR - AREA 'B'

SCALE: 1/4" = 1'-0"
EPROJECT NO.: 1696746
CONSTR. CONTR. NO.
NAVFAC DRAWING NO. 17322065
SHEET 235 OF 468
PL122

DRAWFORM REVISION: 25 AUGUST 2020

3/11/2026 4:56:55 PM PL122
C:\REVIT_2024_PROJECT_FILES\BLDG-J-875-1696746-P_7542_Jon_Koenig.rvt

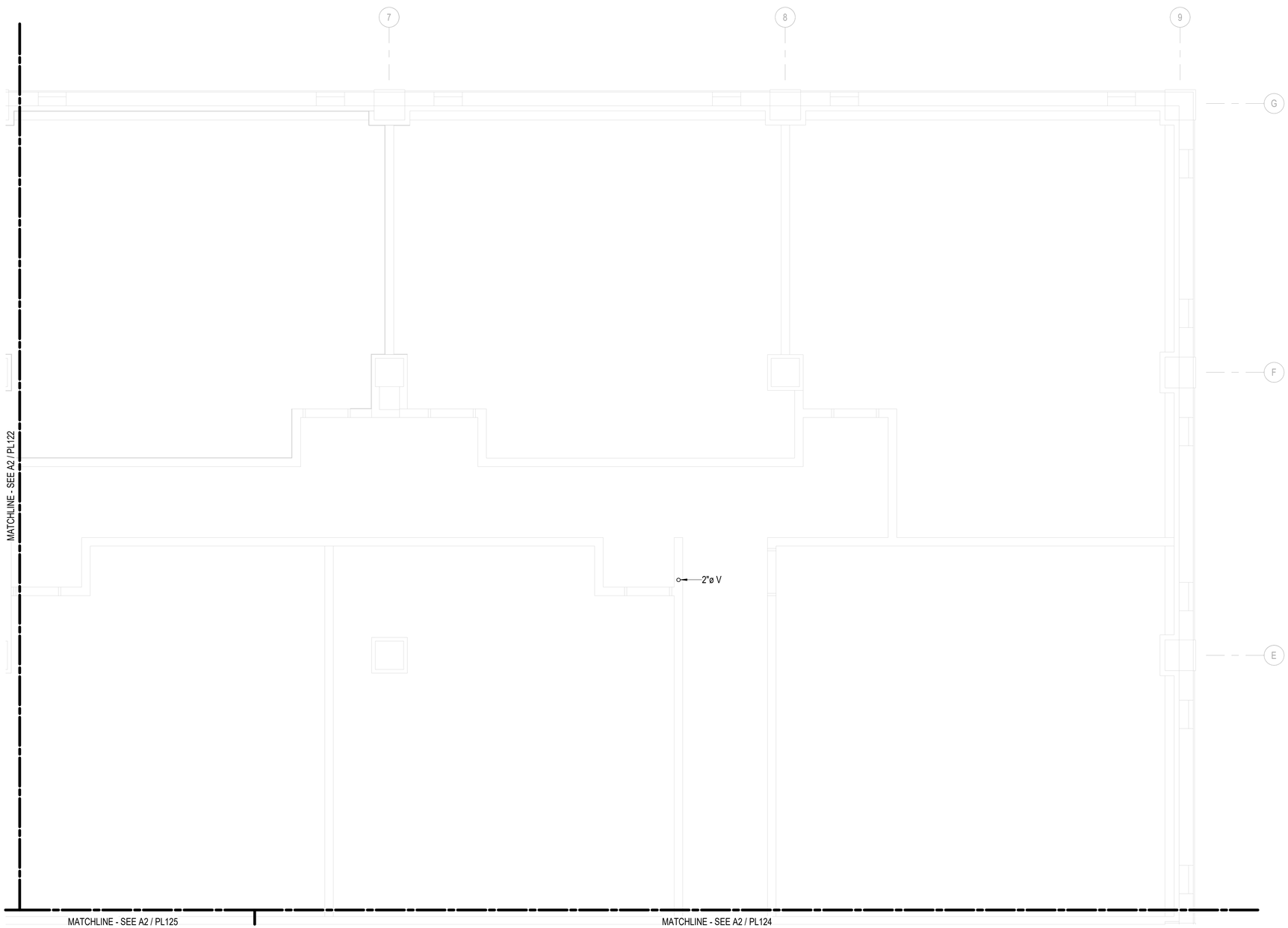

A2 PLUMBING PLAN - SECOND FLOOR - AREA 'C'

1/4" = 1'-0"

GENERAL NOTES

ROOM LEGEND - SECOND FLOOR AREA 'C'

NO.	NAME
126-1	TA - COC WATCH FLOOR-1
127A	OFFICE
129	TA - G5 PLANS

KEY PLAN

PLAN NORTH

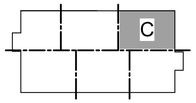

GRAPHIC SCALE(S)

1/4" = 1' - 0" 0 1' 5' 10' 15'

SYM	DESCRIPTION	DATE	APPR

NAVFAC

LICENSED PROFESSIONAL ENGINEER
JITENDRA VALMIK
062-072817
OF ILLINOIS
EXP: 11/30/2027
SIGNED: 03/11/2026 M.A.

ASMD LLC.
A/E INFO

APPROVED
FOR COMMANDER NAVFAC
ACTIVITY
NATHANIEL PYRON, MILCON PLANNER, DPPH
SATISFACTORY TO DATE 3/10/2026
DES JV DRW AL CHK AP
PMDM DKS/DMK
BRANCH MANAGER KYM
CHIEF ENG/ARCH KYM
FIRE PROTECTION RYO

DEPARTMENT OF THE NAVY
NAVAL FACILITIES ENGINEERING SYSTEMS COMMAND ~ PACIFIC
NAVFAC PACIFIC
NAVAL FACILITIES ENGINEERING SYSTEMS COMMAND
MAKALAPA, HAWAII
U.S. NAVSUPPACT
MCB CAMP BLAZ, GUAM
JFY 2022 PROJECT J-875
BATTLE STAFF TRAINING FACILITY
PLUMBING PLAN - SECOND FLOOR - AREA 'C'

SCALE: 1/4" = 1'-0"
EPROJECT NO.: 1696746
CONSTR. CONTR. NO.
NAVFAC DRAWING NO. 17322066
SHEET 236 OF 468
PL123
DRAWFORM REVISION: 25 AUGUST 2020

3/11/2026 4:56:58 PM PL123
C:\REVIT_2024_PROJECT_FILES\BLDG-J-875-1696746-P_7542_Jon_Koenig.rvt

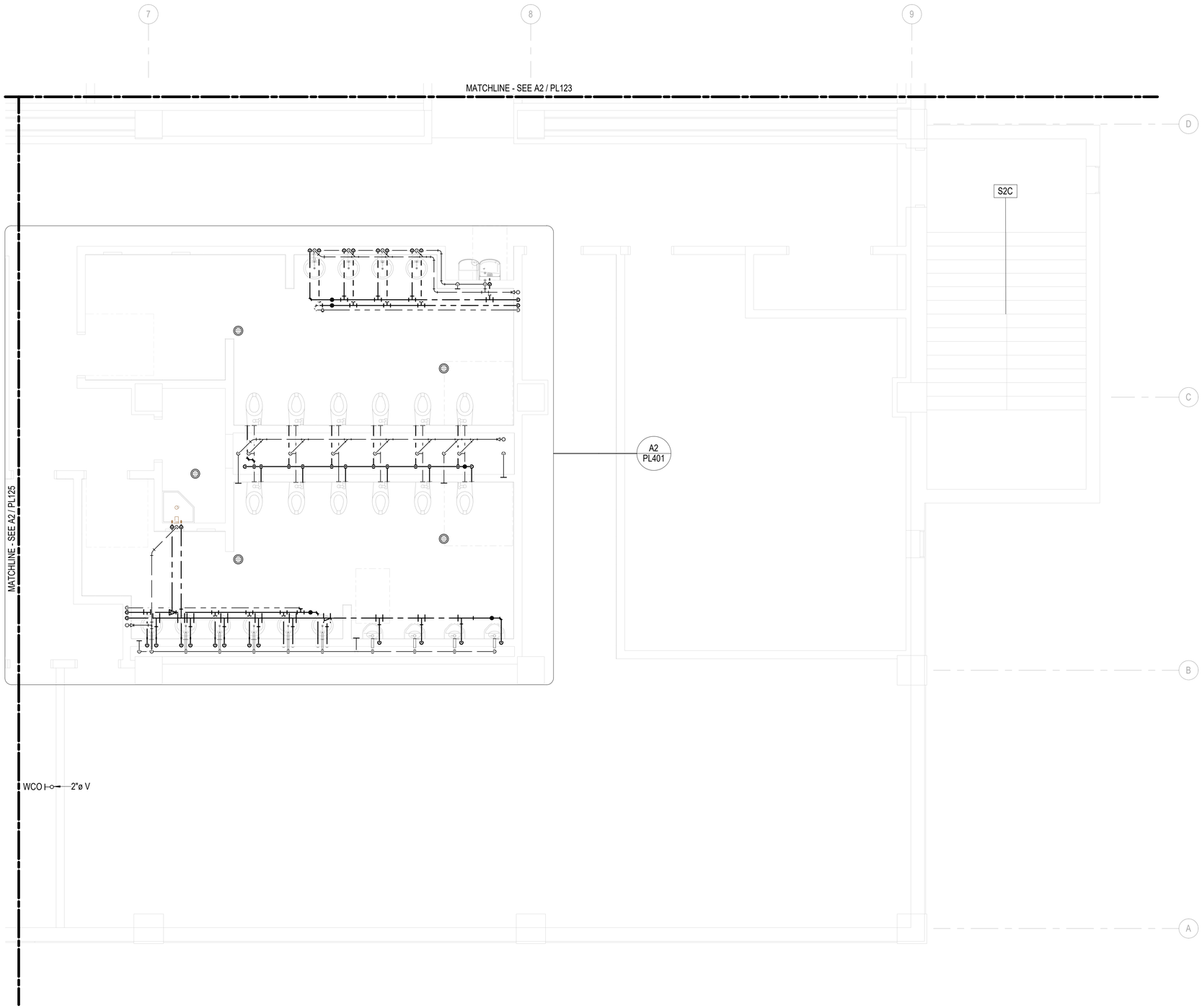

A2 PLUMBING PLAN - SECOND FLOOR - AREA 'D'

1/4" = 1'-0"

GENERAL NOTES

ROOM LEGEND - SECOND FLOOR AREA 'D'

NO.	NAME
127A	OFFICE
217	MECH RM
218	TRAINING MATERIAL STORAGE
219	MEN
221	WOMEN
222	TA - G6 PRIMARY
223	ELEC CLOSET
C2D-1	CORRIDOR 2D-1
C2D-2	CORRIDOR 2D-2
C2D-3	CORRIDOR 2D-3
L2-2	LOBBY 2-2
S2C	STAIR 2C
V2B	VESTIBULE 2B

KEY PLAN

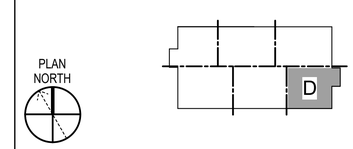

GRAPHIC SCALE(S)

1/4" = 1' - 0"

0 1' 5' 10' 15'

SYM	DESCRIPTION	DATE	APPR

NAVFAC

LICENSED PROFESSIONAL ENGINEER
JITENDRA VALMIK
062-072817
OF ILLINOIS
EXP: 11/30/2027
SIGNED: 03/11/2026

ASMD LLC.
A/E INFO

APPROVED

FOR COMMANDER NAVFAC

ACTIVITY
NATHANIEL PYRON, MILCON PLANNER, DPPH

SATISFACTORY TO DATE 3/10/2026

DES JV DRW AL CHK AP

PM/DM DKS/DMK

BRANCH MANAGER KYM

CHIEF ENG/ARCH KYM

FIRE PROTECTION RYO

DEPARTMENT OF THE NAVY
NAVFAC PACIFIC
NAVAL FACILITIES ENGINEERING SYSTEMS COMMAND
NAVAL FACILITIES ENGINEERING SYSTEMS COMMAND ~ PACIFIC
MAKALAPA, HAWAII
U.S. NAVSUPPACT
MCB CAMP BLAZ, GUAM

JFY 2022 PROJECT J-875
BATTLE STAFF TRAINING FACILITY

PLUMBING PLAN - SECOND FLOOR - AREA 'D'

SCALE: 1/4" = 1'-0"

EPROJECT NO.: 1696746

CONSTR. CONTR. NO.

NAVFAC DRAWING NO.
17322067

SHEET 237 OF 468

PL124

DRAWFORM REVISION: 25 AUGUST 2020

3/11/2026 4:57:02 PM PL124
C:\REVIT_2024_PROJECT_FILES\BLDG-J-875-1696746-P_7542_Jon_Koenig.rvt

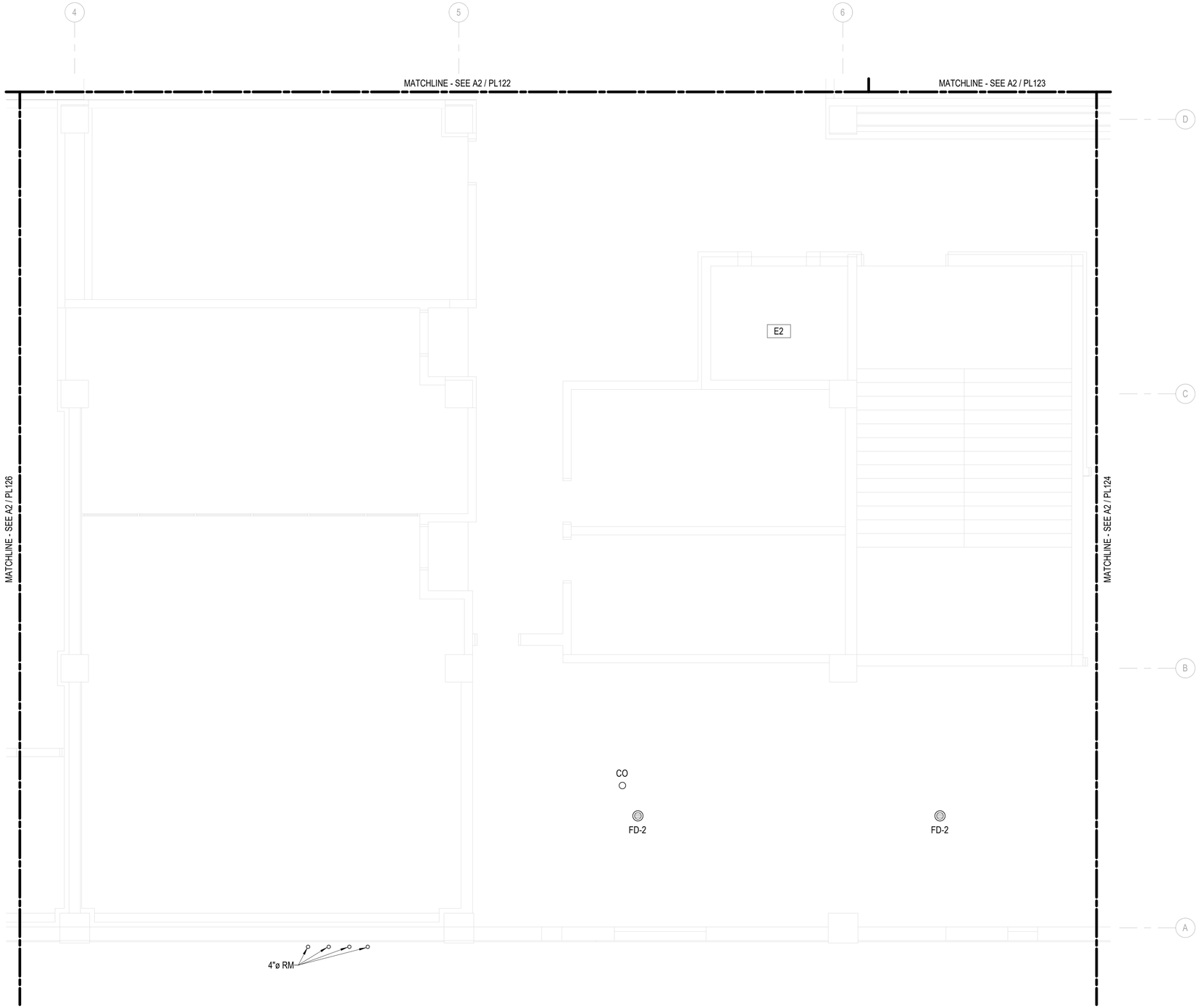

A2 PLUMBING PLAN - SECOND FLOOR - AREA 'E'

1/4" = 1'-0"

GENERAL NOTES

ROOM LEGEND - SECOND FLOOR AREA 'E'

NO.	NAME
211-1	TECG OFFICE / CONF RM-1
211-2	TECG OFFICE / CONF RM-2
211-3	TECG OFFICE / CONF RM-3
211-4	TECG OFFICE / CONF RM-4
211F	OFFICE
212	SVTC CONF RM / SIPR CAFE
213	GTR 2
214	GTR 2T (TRAINING TELECOMM RM)
215	STORAGE
216	CTR 2
217	MECH RM
E2	ELEV 2
L2-1	LOBBY 2-1
L2-2	LOBBY 2-2
S2A	STAIR 2A
V2A	VESTIBULE 2A

KEY PLAN

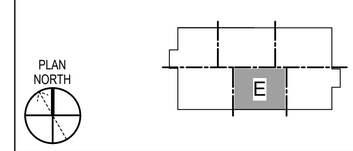

GRAPHIC SCALE(S)

1/4" = 1' - 0" 0 1' 5' 10' 15'

SYM	DESCRIPTION	DATE	APPR

NAVFAC

LICENSED PROFESSIONAL ENGINEER
JITENDRA VALMIK
062-072817
OF ILLINOIS
EXP: 11/30/2027
SIGNED: 03/11/2026

ASMD LLC.
A/E INFO

APPROVED
FOR COMMANDER NAVFAC
ACTIVITY
NATHANIEL PYRON, MILCON PLANNER, DPPH
SATISFACTORY TO DATE 3/10/2026

DES	JV	DRW	AL	CHK	AP

PM/DM	DKS/DMK
BRANCH MANAGER	KYM
CHIEF ENG/ARCH	KYM
FIRE PROTECTION	RYO

DEPARTMENT OF THE NAVY
NAVFAC PACIFIC
U.S. NAVSUPPACT
NAVAL FACILITIES ENGINEERING SYSTEMS COMMAND ~ PACIFIC
NAVAL FACILITIES ENGINEERING SYSTEMS COMMAND
MAKALAPA, HAWAII
MCB CAMP BLAZ, GUAM
JFY 2022 PROJECT J-875
BATTLE STAFF TRAINING FACILITY
PLUMBING PLAN - SECOND FLOOR - AREA 'E'

SCALE: 1/4" = 1'-0"
EPROJECT NO.: 1696746
CONSTR. CONTR. NO.
NAVFAC DRAWING NO. 17322068
SHEET 238 OF 468
PL125

DRAWFORM REVISION: 25 AUGUST 2020

3/11/2026 4:57:06 PM PL125
C:\REVIT_2024_PROJECT_FILES\BLDG-J-875-1696746-P_7542_Jon_Koenig.rvt

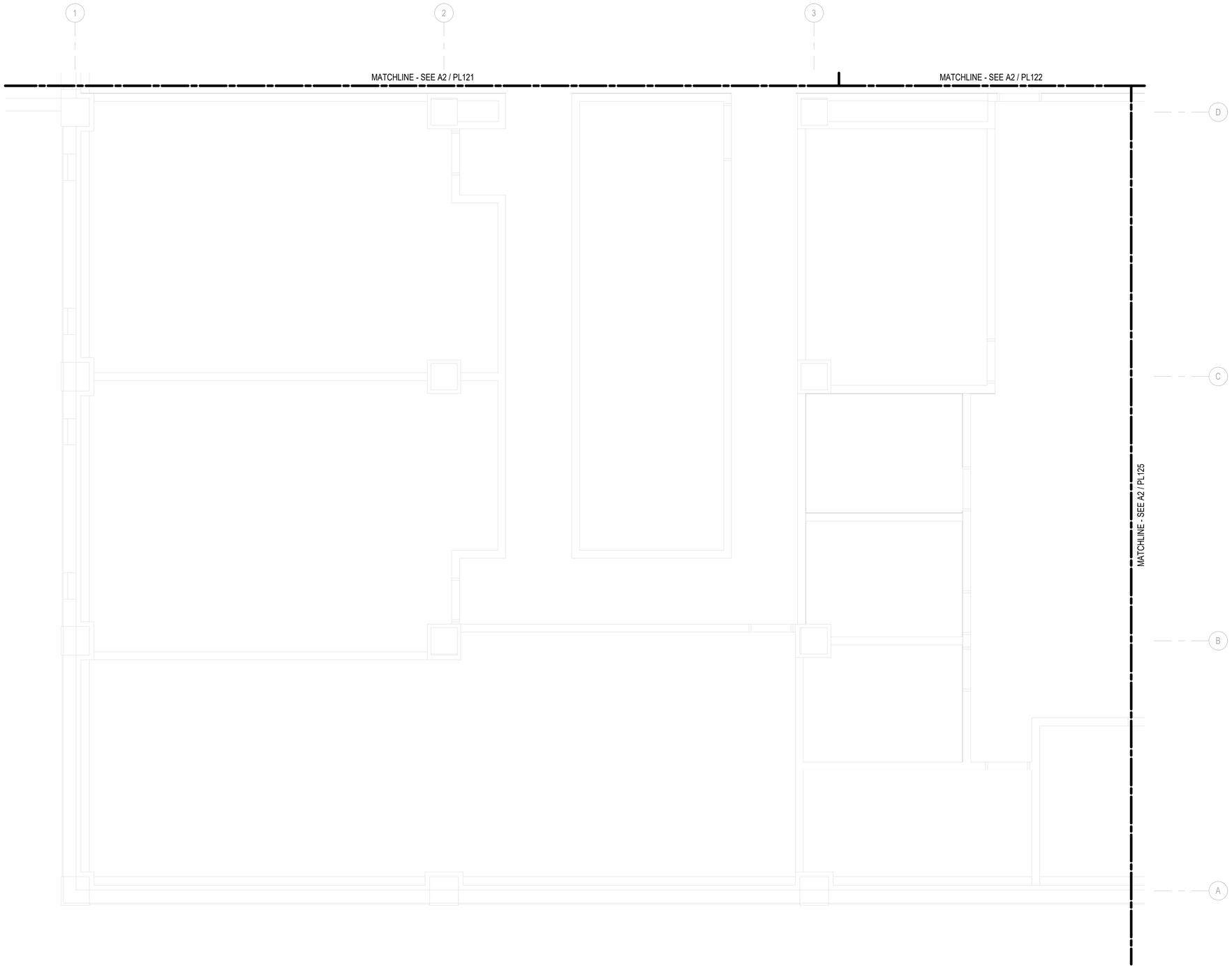

A2 PLUMBING PLAN - SECOND FLOOR - AREA 'F'

1/4" = 1'-0"

GENERAL NOTES

ROOM LEGEND - SECOND FLOOR AREA 'F'

NO.	NAME
208A-1	TA - TECHCON-1
208A-2	TA - TECHCON-2
208B-1	TA - TECHCON-1
208B-2	TA - TECHCON-2
209-1	SIM TECH CONTROL JLVC / MCVP-1
209-2	SIM TECH CONTROL JLVC / MCVP-2
209-3	SIM TECH CONTROL JLVC / MCVP-3
210-1	TRAINING MATERIAL STORAGE-1
210-2	TRAINING MATERIAL STORAGE-2
211-1	TECG OFFICE / CONF RM-1
211-2	TECG OFFICE / CONF RM-2
211-3	TECG OFFICE / CONF RM-3
211-4	TECG OFFICE / CONF RM-4
211B	OFFICE
211F	OFFICE

KEY PLAN

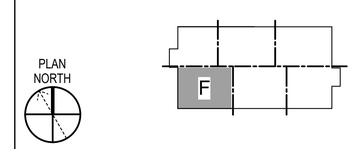

GRAPHIC SCALE(S)

1/4" = 1' - 0" 0 1' 5' 10' 15'

SYM	DESCRIPTION	DATE	APPR

NAVFAC

LICENSED PROFESSIONAL ENGINEER
JITENDRA VALMIK
062-072817
OF ILLINOIS
EXP: 11/30/2027
SIGNED: 03/11/2026 M.A.

ASMD LLC.
A/E INFO

APPROVED
FOR COMMANDER NAVFAC
ACTIVITY
NATHANIEL PYRON, MILCON PLANNER, DPPH
SATISFACTORY TO DATE 3/10/2026
DES JV DRW AL CHK AP
PM/DM DKS/DMK
BRANCH MANAGER KYM
CHIEF ENG/ARCH KYM
FIRE PROTECTION RYO

DEPARTMENT OF THE NAVY
NAVFAC PACIFIC
NAVAL FACILITIES ENGINEERING SYSTEMS COMMAND
NAVAL FACILITIES ENGINEERING SYSTEMS COMMAND ~ PACIFIC
MAKALAPA, HAWAII
U.S. NAVSUPPACT
MCB CAMP BLAZ, GUAM
JFY 2022 PROJECT J-875
BATTLE STAFF TRAINING FACILITY
PLUMBING PLAN - SECOND FLOOR - AREA 'F'

SCALE: 1/4" = 1'-0"
EPROJECT NO.: 1696746
CONSTR. CONTR. NO.
NAVFAC DRAWING NO. 17322069
SHEET 239 OF 468
PL126
DRAWFORM REVISION: 25 AUGUST 2020

3/11/2026 4:57:10 PM PL126
C:\REVIT_2024_PROJECT_FILES\BLDG-J-875-1696746-P_7542_Jon_Koenig.rvt

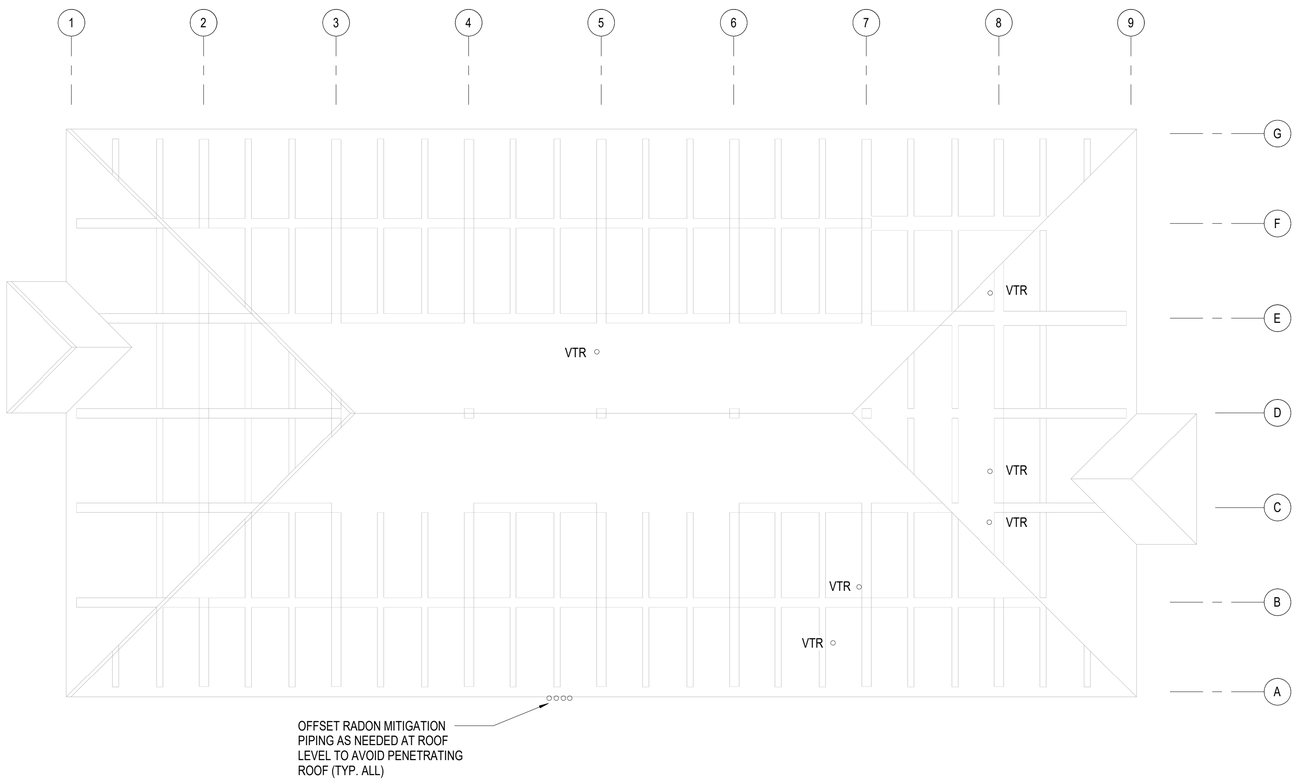

A2 COMPOSITE PLUMBING PLAN - ROOF

1/16" = 1'-0"

GENERAL NOTES

1. ROOF DRAINS CONNECTED TO DOWNSPOUTS DRAINING TO GRADE. SEE ARCHITECTURAL PLANS FOR CONTINUATION

KEY PLAN

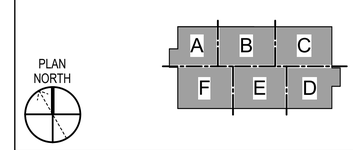

GRAPHIC SCALE(S)

1/16" = 1' - 0" 0 5' 10' 20' 30' 60'

SYM	DESCRIPTION	DATE	APPR

NAVFAC

LICENSED PROFESSIONAL ENGINEER
JITENDRA VALMIK
062-072817
OF ILLINOIS
EXP: 11/30/2027
SIGNED: 03/11/2026 M.A.

ASMD LLC.
A/E INFO

APPROVED

FOR COMMANDER NAVFAC

ACTIVITY
NATHANIEL PYRON, MILCON PLANNER, DPPH

SATISFACTORY TO DATE 3/10/2026

DES JV DRW AL CHK AP

PMDM DKS/DMK

BRANCH MANAGER KYM

CHIEF ENG/ARCH KYM

FIRE PROTECTION RYO

DEPARTMENT OF THE NAVY
NAVAL FACILITIES ENGINEERING SYSTEMS COMMAND
NAVFAC PACIFIC
U.S. NAVSUPPACT

NAVAL FACILITIES ENGINEERING SYSTEMS COMMAND ~ PACIFIC
MAKALAPA, HAWAII

MCB CAMP BLAZ, GUAM

JFY 2022 PROJECT J-875
BATTLE STAFF TRAINING FACILITY

COMPOSITE PLUMBING PLAN - ROOF

SCALE: 1/16" = 1'-0"

EPROJECT NO.: 1696746

CONSTR. CONTR. NO.

NAVFAC DRAWING NO.
17322070

SHEET 240 OF 468

PL140

DRAWFORM REVISION: 25 AUGUST 2020

3/11/2026 4:57:13 PM PL140
C:\REVIT_2024_PROJECT_FILES\BLDG-J-875-1696746-P_7542_Jon_Koenig.rvt

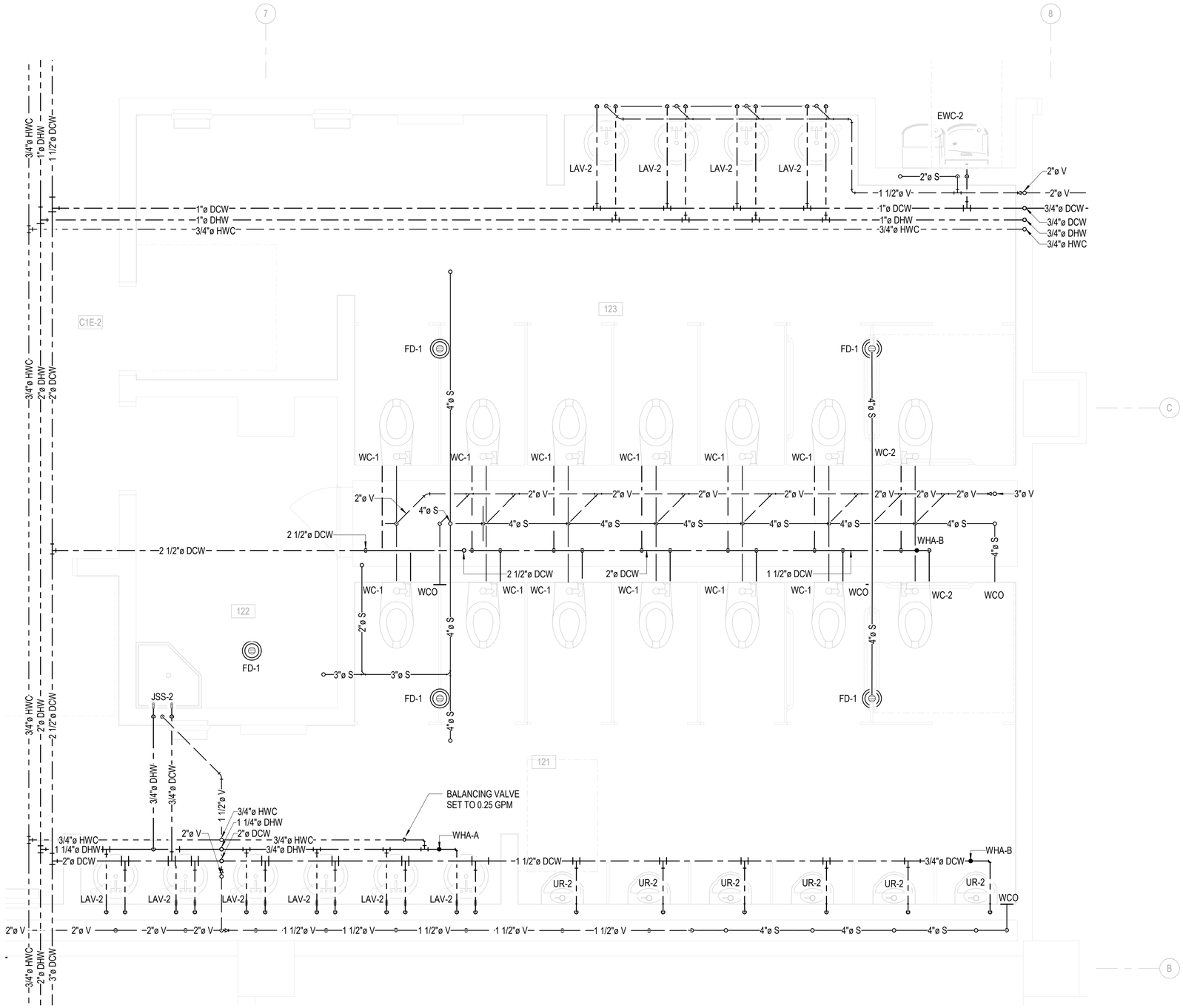

(PL114) **A2** **PLUMBING PLAN - FIRST FLOOR - AREA 'D' - ENLARGED**

1/2" = 1'-0"

GENERAL NOTES

1. ALL UR-2 DOMESTIC CONNECTIONS ARE 3/4" DIA UNLESS NOTED OTHERWISE.
2. ALL WC-1 AND WC-2 DOMESTIC CONNECTIONS ARE 1" DIA AND SANITARY CONNECTIONS ARE 4" DIA UNLESS NOTED OTHERWISE.
3. ALL LAV-2 DOMESTIC CONNECTIONS ARE 3/4" DIA UNLESS NOTED OTHERWISE.

SYM	DESCRIPTION	DATE	APPR

NAVFAC

LICENSED PROFESSIONAL ENGINEER
JITENDRA VALMIK
062-072817
OF ILLINOIS
EXP: 11/30/2027
SIGNED: 03/11/2026

ASMD LLC.
A/E INFO

APPROVED
FOR COMMANDER NAVFAC

ACTIVITY
NATHANIEL PYRON, MILCON PLANNER, DPPH

SATISFACTORY TO DATE 3/10/2026

DES	JV	DRW	AL	CHK	AP
PM/DM	DKS/DMK				
BRANCH MANAGER	KYM				
CHIEF ENG/ARCH	KYM				
FIRE PROTECTION	RYO				

DEPARTMENT OF THE NAVY
NAVAL FACILITIES ENGINEERING SYSTEMS COMMAND
NAVFAC PACIFIC
U.S. NAVSUPPACT

NAVAL FACILITIES ENGINEERING SYSTEMS COMMAND ~ PACIFIC
MAKALAPA, HAWAII
MCB CAMP BLAZ, GUAM

JFY 2022 PROJECT J-875
BATTLE STAFF TRAINING FACILITY

ENLARGED PLUMBING PLANS - SHEET 1

SCALE: 1/2" = 1'-0"
EPROJECT NO.: 1696746
CONSTR. CONTR. NO.
NAVFAC DRAWING NO. 17322071
SHEET 241 OF 468

PL400

DRAWFORM REVISION: 25 AUGUST 2020

KEY PLAN

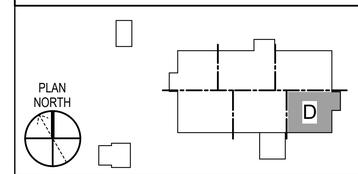

GRAPHIC SCALE(S)

1/2" = 1' - 0" 0 6" 1' 2' 3' 4' 5'

3/11/2026 4:57:17 PM PL400
C:\REVIT_2024_PROJECT_FILES\BLDG-J-875-1696746-P_7542_Jon_Koenig.rvt

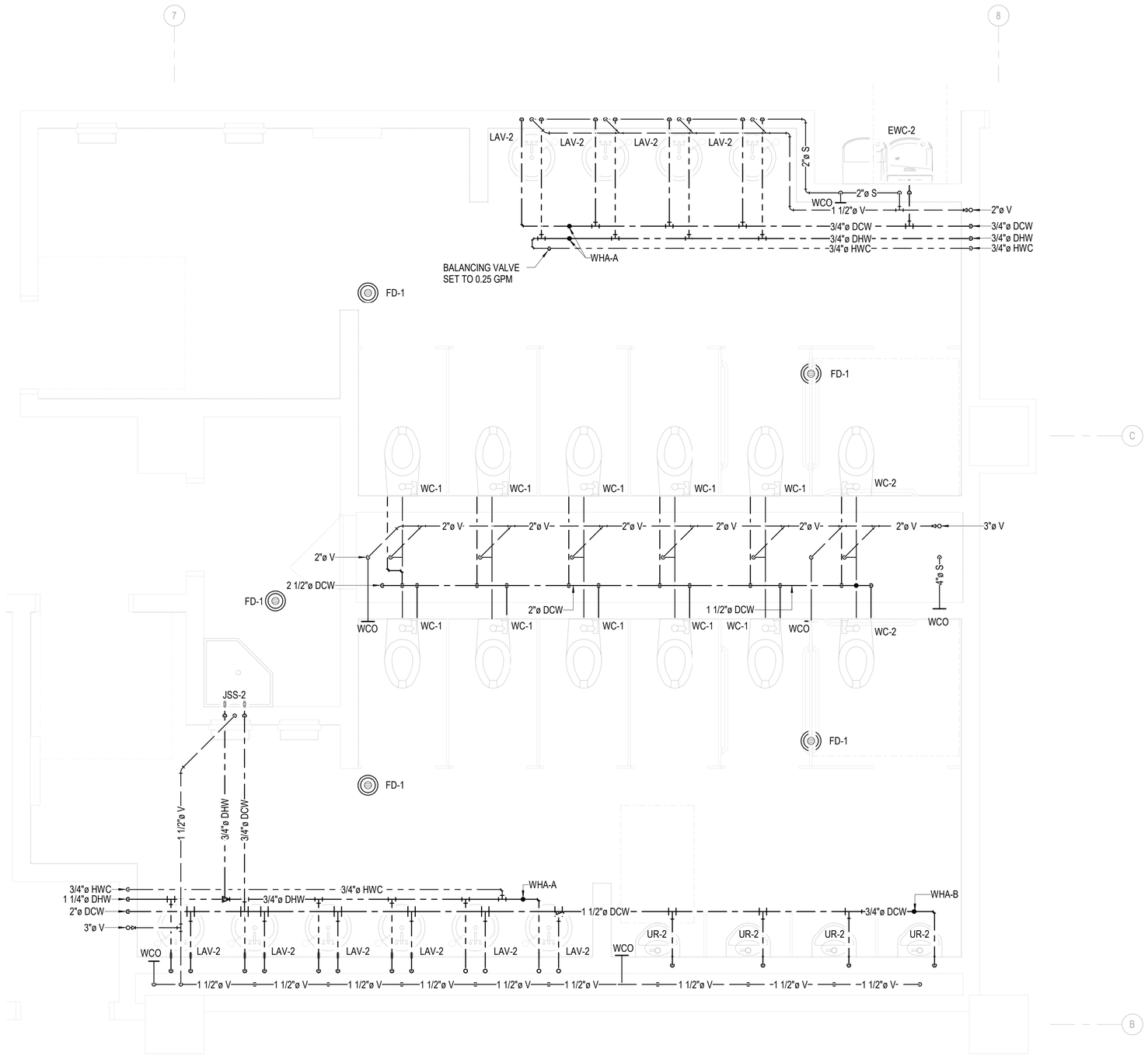

(PL124) **A2** **PLUMBING PLAN - SECOND FLOOR - AREA 'C' - ENLARGED**

1/2" = 1'-0"

GENERAL NOTES

1. ALL UR-2 DOMESTIC CONNECTIONS ARE 3/4" DIA UNLESS NOTED OTHERWISE.
2. ALL WC-1 AND WC-2 DOMESTIC CONNECTIONS ARE 1" DIA AND SANITARY CONNECTIONS ARE 4" DIA UNLESS NOTED OTHERWISE.
3. ALL LAV-2 DOMESTIC CONNECTIONS ARE 3/4" DIA UNLESS NOTED OTHERWISE.

SYM	DESCRIPTION	DATE	APPR

KEY PLAN

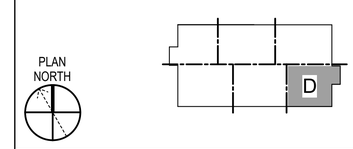

GRAPHIC SCALE(S)

1/2" = 1' - 0" 0 6" 1' 2' 3' 4' 5'

LICENSED PROFESSIONAL ENGINEER
JITENDRA VALMIK
062-072817
OF ILLINOIS
EXP: 11/30/2027
SIGNED: 03/11/2026

APPROVED
FOR COMMANDER NAVFAC
ACTIVITY
NATHANIEL PYRON, MILCON PLANNER, DPPH
SATISFACTORY TO DATE 3/10/2026
DES JV DRW AL CHK AP
PM/DM DKS/DMK
BRANCH MANAGER KYM
CHIEF ENG/ARCH KYM
FIRE PROTECTION RYO

DEPARTMENT OF THE NAVY
NAVFAC PACIFIC
U.S. NAVSUPPACT
NAVAL FACILITIES ENGINEERING SYSTEMS COMMAND
NAVAL FACILITIES ENGINEERING SYSTEMS COMMAND ~ PACIFIC
MAKALAPA, HAWAII
MCB CAMP BLAZ, GUAM
JFY 2022 PROJECT J-875
BATTLE STAFF TRAINING FACILITY
ENLARGED PLUMBING PLANS - SHEET 2

SCALE: 1/2" = 1'-0"
EPROJECT NO.: 1696746
CONSTR. CONTR. NO.
NAVFAC DRAWING NO. 17322072
SHEET 242 OF 468
PL401

DRAWFORM REVISION: 25 AUGUST 2020

3/11/2026 4:57:22 PM PL401
C:\REVIT_2024_PROJECT_FILES\BLDG-J-875-1696746-P_7542_Jon_Koenig.rvt

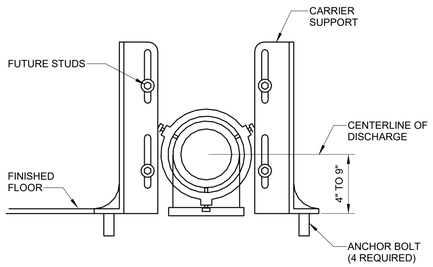

C1 WALL HUNG WATER CLOSET MOUNTING

SCALE: NONE

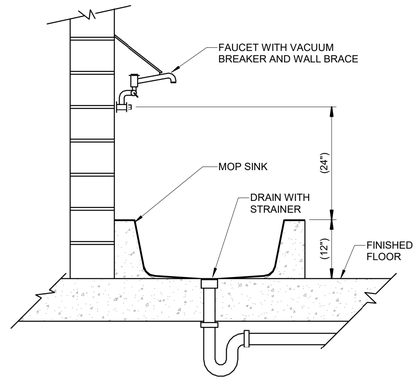

C2 JANITOR RECEPTOR (JSS)

SCALE: NONE

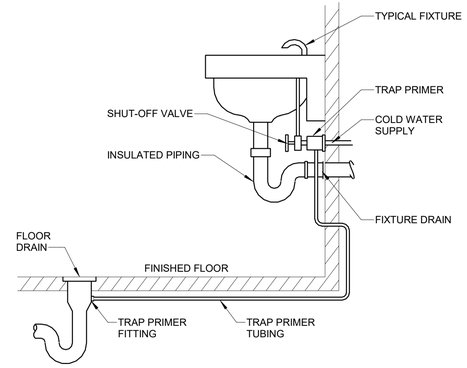

NOTES:

1. ALL PIPE PENETRATIONS SHALL HAVE ESCUTCHEONS.

C3 LAVATORY MOUNTING

SCALE: NONE

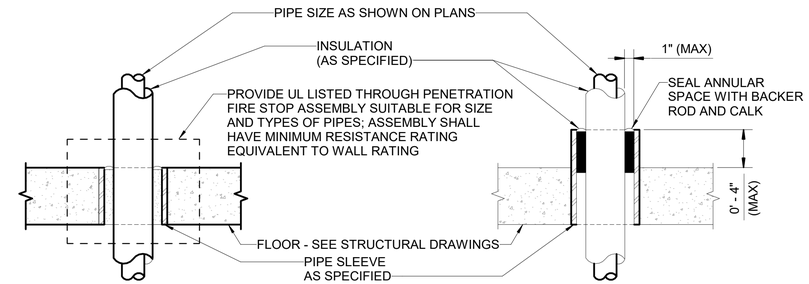

FIRE RATED PIPE PENETRATION

NON-FIRE RATED PIPE PENETRATION

C4 PIPE FLOOR PENETRATION DETAILS

NOT TO SCALE

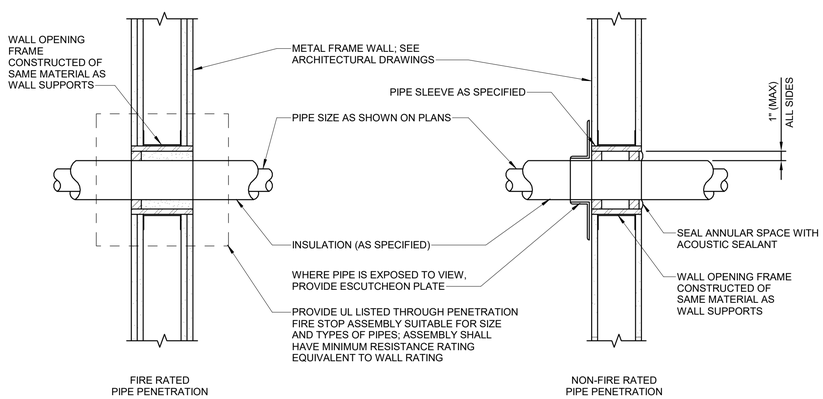

FIRE RATED PIPE PENETRATION

NON-FIRE RATED PIPE PENETRATION

A1 METAL FRAME WALL PIPE PENETRATIONS

SCALE: NONE

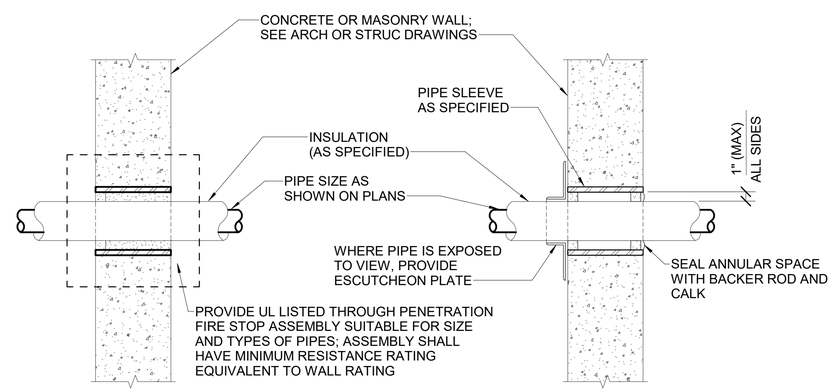

FIRE RATED PIPE PENETRATION

NON-FIRE RATED PIPE PENETRATION

A3 CONCRETE OR MASONRY WALL PIPE PENETRATION DETAILS

NOT TO SCALE

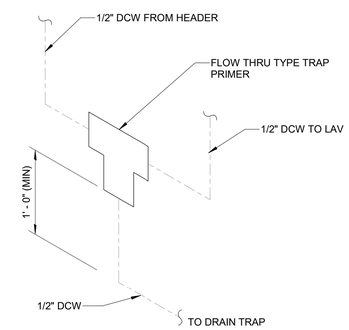

NOTES:

1. INSTALL IN AN ACCESSIBLE LOCATION.
2. PRIMER SHALL BE SUITABLE FOR 20 TO 80 PSI OPERATING PRESSURE RANGE AND 0.25 GPM MINIMUM FLOW.
3. PROVIDE HARD DRAWN OR SOFT ANNEALED TUBE TO DRAIN TRAP.
4. PROVIDE INTEGRAL VACUUM BREAKER.
5. PRIMER SHALL MEET ASSE 1018.

A5 FLOW THRU TYPE TRAP PRIMER

NOT TO SCALE

SYM	DESCRIPTION	DATE	APPR

NAVFAC

LICENSED PROFESSIONAL ENGINEER JITENDRA VALMIK 062-072817 OF ILLINOIS

EXP: 11/30/2027
SIGNED: 03/11/2026 M.A.

ASMD LLC.

A/E INFO

APPROVED

FOR COMMANDER NAVFAC

ACTIVITY: NATHANIEL PYRON, MILCON PLANNER, DPPH

SATISFACTORY TO DATE 3/10/2026

DES JV | DRW AL | CHK AP

PM/DM DKS/DMK

BRANCH MANAGER KYM

CHIEF ENG/ARCH KYM

FIRE PROTECTION RYO

DEPARTMENT OF THE NAVY
NAVFAC PACIFIC
U.S. NAVSUPPACT

NAVAL FACILITIES ENGINEERING SYSTEMS COMMAND
NAVAL FACILITIES ENGINEERING SYSTEMS COMMAND ~ PACIFIC
MAKALAPA, HAWAII

MCB CAMP BLAZ, GUAM

JFY 2022 PROJECT J-875
BATTLE STAFF TRAINING FACILITY

PLUMBING DETAILS - SHEET 1

SCALE: NTS

EPROJECT NO.: 1696746

CONSTR. CONTR. NO.

NAVFAC DRAWING NO. 17322073

SHEET 243 OF 468

PL500

DRAWFORM REVISION: 25 AUGUST 2020

3/11/2026 4:57:24 PM PL500
C:\REVIT_2024_PROJECT_FILES\BLDG-J-875-1696746-P_7542_Jon_Koenig.rvt

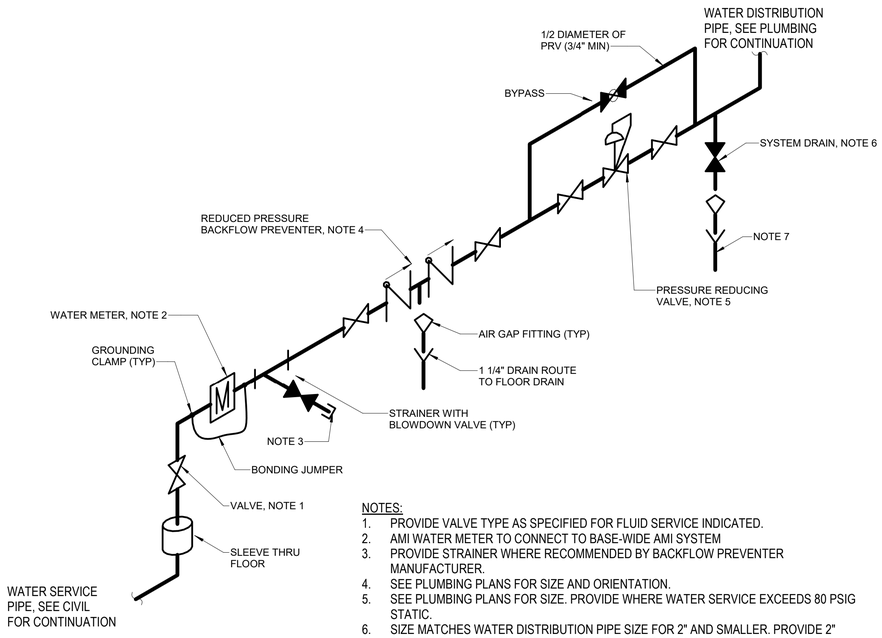

NOTES:
1. PROVIDE VALVE TYPE AS SPECIFIED FOR FLUID SERVICE INDICATED.
2. AMI WATER METER TO CONNECT TO BASE-WIDE AMI SYSTEM
3. PROVIDE STRAINER WHERE RECOMMENDED BY BACKFLOW PREVENTER MANUFACTURER.
4. SEE PLUMBING PLANS FOR SIZE AND ORIENTATION.
5. SEE PLUMBING PLANS FOR SIZE. PROVIDE WHERE WATER SERVICE EXCEEDS 80 PSIG STATIC.
6. SIZE MATCHES WATER DISTRIBUTION PIPE SIZE FOR 2" AND SMALLER. PROVIDE 2" SYSTEM DRAIN FOR WATER DISTRIBUTION PIPE 2 1/2" AND LARGER.
7. PROVIDE DRAIN TWO NOMINAL PIPE SIZES LARGER THAN SYSTEM DRAIN.

C1 WATER SERVICE ENTRANCE DETAIL
NOT TO SCALE

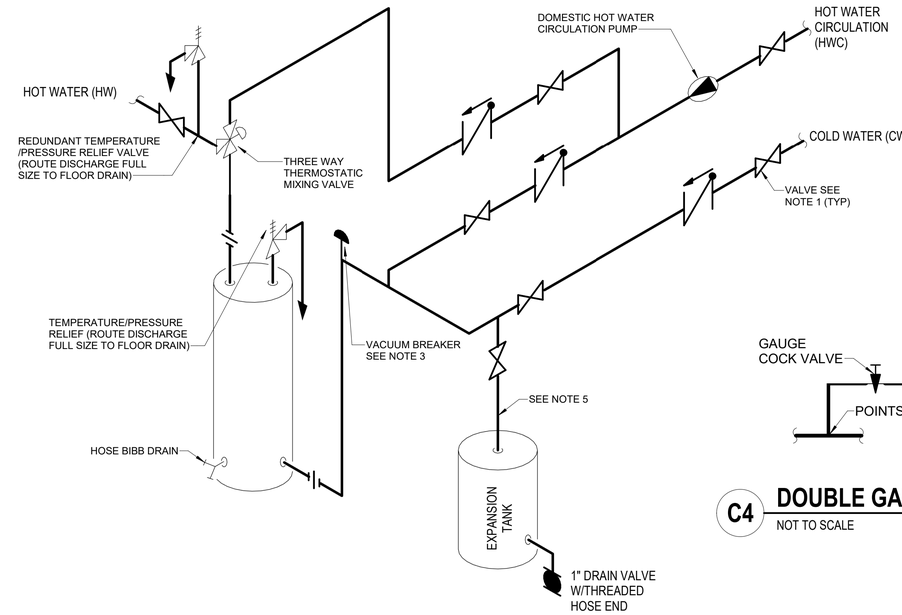

NOTES:
1. PROVIDE VALVE TYPES AS SPECIFIED FOR FLUID SERVICES INDICATED.
2. FOR ACTUAL SIZES AND LOCATIONS OF PIPING AND OTHER CONNECTIONS TO THE HEATER, SEE MECHANICAL PLANS, SCHEMATICS AND ISOMETRICS.
3. INSTALL VACUUM BREAKER PER MANUFACTURER'S RECOMMENDATIONS AND LOCAL CODES.
4. REDUCERS, ON THE WATER INLET SIDE, SHOULD BE LOCATED ADJACENT TO THE HEATER. EXPANSION FITTINGS, ON THE WATER INLET SIDE, SHOULD BE LOCATED AS FAR AS POSSIBLE FROM THE HEATER.
5. SIZE SHALL BE 3/4" UNLESS NOTED OTHERWISE.

C3 FLOOR MOUNTED HEAT PUMP WATER HEATER DETAIL
NOT TO SCALE

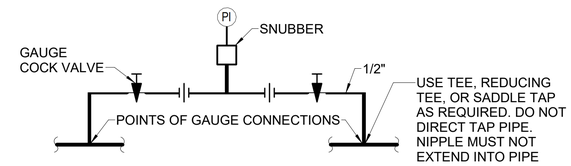

C4 DOUBLE GAUGE (DG) CONNECTION DETAIL
NOT TO SCALE

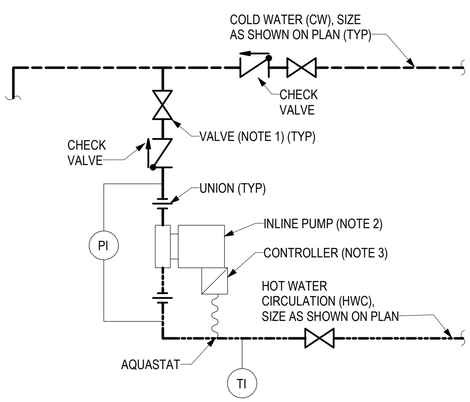

NOTES:
1. PROVIDE VALVE TYPES AS INDICATED IN SPECIFICATION FOR FLUID SERVICES BEING PUMPED.
2. SUPPORT PUMP AS REQUIRED BY PUMP MANUFACTURER AND SPECIFICATION. PUMP SUPPORT SHALL ELIMINATE STRESS ON PUMP COMPONENTS AND SHALL ALLOW FOR PIPE EXPANSION.
3. PROVIDE COMBINATION TIME CLOCK/AQUASTAT CONTROLLER

A1 DOMESTIC HOT WATER CIRCULATION PUMP PIPING DETAIL
NOT TO SCALE

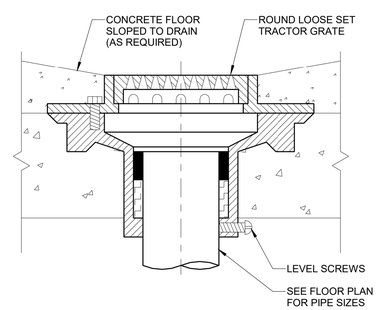

NOTES:
1. FOR USE IN UNFINISHED SPACES.

A2 FLOOR DRAIN (FD)
SCALE: NONE

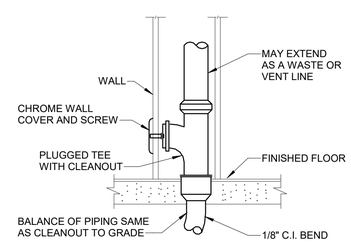

A3 WALL CLEANOUT (WCO)
SCALE: NONE

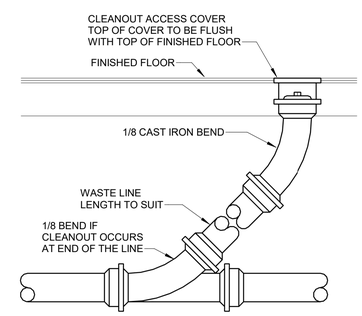

A4 FLOOR CLEANOUT (CO)
SCALE: NONE

SYM	DESCRIPTION	DATE	APPR

NAVFAC

LICENSED PROFESSIONAL ENGINEER JITENDRA VALMIK 062-072817 OF ILLINOIS
EXP: 11/30/2027
SIGNED: 03/11/2026 M.A.

ASMD LLC. AE INFO

APPROVED
FOR COMMANDER NAVFAC
ACTIVITY: NATHANIEL PYRON, MILCON PLANNER, DPPH
SATISFACTORY TO DATE 3/10/2026
DES JV | DRW AL | CHK AP
PM/DM DKS/DMK
BRANCH MANAGER KYM
CHIEF ENG/ARCH KYM
FIRE PROTECTION RYO

DEPARTMENT OF THE NAVY
NAVAL FACILITIES ENGINEERING SYSTEMS COMMAND ~ PACIFIC
NAVFAC PACIFIC
U.S. NAVSUPPACT
NAVAL FACILITIES ENGINEERING SYSTEMS COMMAND
MAKALAPA, HAWAII
MCB CAMP BLAZ, GUAM
JFY 2022 PROJECT J-875
BATTLE STAFF TRAINING FACILITY
PLUMBING DETAILS - SHEET 2

SCALE: NTS
EPROJECT NO.: 1696746
CONSTR. CONTR. NO.
NAVFAC DRAWING NO. 17322074
SHEET 244 OF 468
PL501

DRAWFORM REVISION: 25 AUGUST 2020

3/11/2026 4:57:27 PM PL501
C:\REVIT_2024_PROJECT_FILES\BLDG-J-875-1696746-P_7542_Jon_Koenig.rvt

PLUMBING FIXTURE SCHEDULE

PLAN DESIGNATION	TYPE	DESCRIPTION	ACCESSORIES	COLD WATER CONNECTION SIZE (IN)	HOT WATER CONNECTION SIZE (IN)	WASTE CONNECTION SIZE (IN)	VENT CONNECTION SIZE (IN)	MOUNTING HEIGHT AFF (IN)	NOTES
CO	CLEANOUT	ADJUSTABLE TOP FLOOR MOUNTED CLEANOUT	PROVIDE EXTENSION TO FINISHED FLOOR, ROUND COVER WITH DEPRESSED CENTER SECTION TO ACCOMADATE FLOOR FINISH FOR FINISHED AREA, AND ROUND NICKEL BRONZE SCORIATED TOP FOR UNFINSHED SPACES.	---	---	SEE PLANS	N/A	---	
FD-1	FLOOR DRAIN	COATED CAST IRON BODY WITH SEEPAGE HOLES, TRAP SEAL DEVICE, COMBINED 2-PIECE BODY AND REVERSBLE CLAMPING DEVICE	STANDARD WEIGHT ROUND, ADJUSTABLE STRAINER WITH HEEL PROOF, VANDAL PROOF, SECURED GRATE. FINISH: NICKEL BRONZE	---	---	SEE PLANS	SEE PLANS	---	
FD-2	FLOOR DRAIN	COATED CAST IRON WITH FLASHING CLAMPING FLANGE, TRAP SEAL DEVICE, SEEPAGE HOLES AND GRATE SUPPORTED BY SEDIMENT BUCKET	HEAVY DUTY CAST IRON GRATE.	---	---	SEE PLANS	SEE PLANS	---	
FS-1	FLOOR SINK	8" x 8" x 6" ACID-RESISTANT ENAMELED CAST-IRON FLOOR SINK WITH ALUMINUM DOME STRAINER AND SEDIMENT BUCKET.	3/4 GRATE, MEDIUM DUTY RATED, TRAP SEAL DEVICE.	---	---	SEE PLANS	SEE PLANS	---	
IMB-1	ICE MAKER WALL BOX	ICE MAKER OUTLET BOX WITH 1/4 TURN BALL VALVE, HAMMER ARRESTOR VALVE.	PROVIDE INLINE WATER FILTER FROM ICE MAKER BOX TO ICE MAKER WITH DIRECT CONNECT FITTINGS.	1/2	---	---	---	---	
JSS-2	MOP SINK	24"X24"X 12" DEEP TERRAZZO MOP SINK WITH 1-34" MINIMUM SHOULDER, 6" DROP FRONT. PROVIDE INTEGRAL STAINLESS STEEL STRAINER AND TAILPIECE	FAUCET: WALL MOUNTED ON 8" CENTERS, POLISHED CHROME FINISH BRASS, LEVER HANDLES, SERVICE SINK THREADED SPOUT TYPE. PROVIDE PAIL HOOK, WALL BRACE AND VACUUM BREAKER. PROVIDE STAINLESS STEEL BASIN CAP ON 4 SIDES, 18" HIGH STAINLESS STEEL WALL PLATES ON ALL ADJACENT WALLS, 48" HOSE AND HOSE BRACKET, AND MOP HANGER.	3/4	3/4	3	1-1/2	---	
LAV-2	LAVATORY	WHITE, SELF RIMMING, 19" ROUND VITREOUS CHINA WITH DRILLINGS ON 4" CENTERS	FAUCET: DECK MOUNTED ON 4" CENTERS, ADA COMPLIANT, POLISHED CHROME FINISH BRASS, SINGLE HANDLE, STANDARD SPOUT TYPE. MAXIMUM OF 0.35 GPM FLOW RATE. PROVIDE ADA COMPLIANT OFFSET TAILPIECE AND DRAIN. PROVIDE CHAIR CARRIER	1/2	1/2	1-1/4	1-1/4		
SK-2	SINK	19 X 19, 18 GAGE STAINLESS STEEL SINGLE BOWL, ADA COMPLIANT SINK , MINIMUM DEPTH OF 5", PROVIDE 3 HOLE CONFIGURATION	FAUCET: DECK MOUNTED ADA COMPLIANT POLISHED CHROME FINISH BRASS, WRIST BLADE HANDED, GOOSENECK SPOUT. MAXIMUM OF 1.5 GP FLOW RATE. PROVIDE STAINLESS STEEL DRAIN AND ADA COMPLIANT OFFSET TAILPIECE WITH REMOVABLE STAINLESS STEEL BASKET.	3/4	3/4	1-1/2	1-1/2		
UR-2	URINAL	ADA COMPLIANT, WHITE, WALL HUNG, VITREOUS CHINA, 0.5 GPF URINAL WITH 3/4" TOP SPUD	FLUSH VALVE: MANUAL, 0.5 GPF EXPOSED, QUIET, DIAPHRAGM-TYPE, POLISHED CHROME PLATED ADA-COMPLIANT FLUSHOMETER VALVE. PROVIDE HIGH PACK PRESSURE VACUUM BREAKER, ADJUSTABLE TAILPIECE, SPUD COUPLING AND FLANGE FOR TOP SPUD CONNECTION. CONTROL STOP SHALL HAVE INTERNAL SIPHON-GUARD PROTECTION.	3/4	---	2	2	17" IN ACCORDANCE WITH ADA REQUIREMENTS UNLESS NOTED OTHERWISE	
WC-1	WATER CLOSET	WHITE, WALL MOUNTED VITREOUS CHINA 1.28 GPF ENLONGATED BOWL WITH 1-1/2" TOP SPUD AND MINIMUM OF 2" TRAP SIZE	SEAT: BLACK HEAVY DUTY PLASTIC WITH SELF SUSTAINING CHECK HINGE AND OPEN FRONT. FLUSH VALVE: MANUAL, 1.28 GPM EXPOSED, QUIET, DIAPHRAGM-TYPE, POLISHED CHROME PLATED ADA-COMPLIANT FLUSHOMETER VALVE. PROVIDE HIGH PACK PRESSURE VACUUM BREAKER, ADJUSTABLE TAILPIECE, SPUD COUPLING AND FLANGE FOR TOP SPUD CONNECTION. CONTROL STOP SHALL HAVE INTERNAL SIPHON-GUARD PROTECTION.	1	---	4	2	15" AFF TO TOP OF SEAT. VALUE MOUNTING HEIGHT 11.5" ABOVE SEAT	
WC-2	WATER CLOSET	WHITE, ADA COMPLIANT, WALL MOUNTED VITREOUS CHINA 1.6 GPF ENLONGATED BOWL WITH 1-1/2" TOP SPUD AND MINIMUM 2" TRAP SIZE	SEAT: BLACK HEAVY DUTY PLASTIC WITH SELF SUSTAINING CHECK HINGE AND OPEN FRONT. FLUSH VALVE: MANUAL, 1.28 GPM EXPOSED, QUIET, DIAPHRAGM-TYPE, POLISHED CHROME PLATED ADA-COMPLIANT FLUSHOMETER VALVE. PROVIDE HIGH PACK PRESSURE VACUUM BREAKER, ADJUSTABLE TAILPIECE, SPUD COUPLING AND FLANGE FOR TOP SPUD CONNECTION. CONTROL STOP SHALL HAVE INTERNAL SIPHON-GUARD PROTECTION.	1	---	4	2	17" AFF TO TOP OF SEAT. VALUE MOUNTING HEIGHT 11.5" ABOVE SEAT	
WCO	CLEANOUT	TAPERED CAULK FERRULE WITH BRONZE THREADED CLEANOUT PLUG	PROVIDE ROUND WALL ACCESS COVER WITH CENTER SCREW FOR FINISHED AREAS	---	---	SEE PLANS	N/A	---	
WH-1	WALL HYDRANT	CHROME PLATED BRONZE,CONCEALED BOX TYPE ,WALL HYDRANT	PROVIDE HINGED LATCHING COVER, INTERGRAL VACUUM BREAKER, PRESSURE RELIEF VALVE, DRAIN, WALL CLAMP, AND LOOSE TEE KEY FOR VALVE OPERATION	3/4"	---	1'6" ABOVE GRADE UNLESS NOTED OTHERWISE	---	---	
YCO	CLEANOUT: YARD	HEAVY DUTY CAST IRON WITH THREADED ADJUSTABLE HOUSING, FLANGED FERRULE, INTERNAL RECESSED BRONZE PLUG AND HEAVY DUTY CAST IRON TRACTOR TYPE COVER	PROVIDE EXTENSION TO GRADE, VANDAL-PROOF BRASS COVER FOR DUAL-DIRECTION MAINTENANCE ACCESS.	---	---	SEE PLANS	N/A	---	

NOTES:
1. LOW FLOW EFFICIENT TYPE. PROVIDE WATERSENSE LABLE
2. PIPE SIZES SHOWN ARE MINIMUM UNLESS NOTED OTHERWISE

WATER HEATER - AIR SOURCE HEAT PUMP (EWH) SCHEDULE

PLAN DESIGNATION	LOCATION	VOLUME (GAL)	HEAT PUMP CAPACITY (MBH)	ELECTRICAL COIL CAPACITY (KW)	HEAT PUMP RECOVERY 100°F RISE (GPH)	ELECTRIC COIL RECOVERY 100°F RISE (GPH)	TOTAL RECOVERY 100°F RISE (GPH)	REFRIGERANT	REFRIGERANT QTY (LBS)	COP	ELECTRICAL						NOTES
											HEAT PUMP INPUT POWER (KW)	MCA	MOCP	VOLTAGE	HZ	PHASE	
EWH-1	MECHANICAL ROOM 125	120	37.9	12.0	68	83	151	R134a	3.30	4.2	2.4	67.0	90	240	60	1	(1) (2) (3) (4)
EWH-2	MECHANICAL ROOM 125	120	37.9	12.0	68	83	151	R134a	3.30	4.2	2.4	67.0	90	240	60	1	(1) (2) (3) (4)

NOTES:
1. ROUTE DRAINS TO NEAREST FLOOR DRAIN
2. PROVIDE 3 YEAR WARRANTY ON TANK
3. PROVIDE 4 INCH CONCRETE EQUIPMENT BASE
4. PROVIDE TWO (2) FULL SIZE RELIEF VALVES. SECOND RV SHALL BE INSTALLED IN DHW LINE BETWEEN WH AND ISOLATION VALVE. ROUTE DRAIN TO NEAREST FLOOR DRAIN

PLUMBING PUMP (P) SCHEDULE

PLAN DESIGNATION	TYPE	SYSTEM	FLOW RATE (GPM)	OPERATING HEAD (FT)	PUMP SPEED (RPM)	MOTOR POWER (Hp)	ELECTRICAL			DISCHARGE SIZE (IN)	NOTES
							VOLTAGE	HZ	PHASE		
P-1	INLINE CIRCULATION	DOMESTIC HOT WATER	2.0	15.0	2940	0.1	115	60	1	3/4"	(1) (2)

NOTES:
1. PROVIE UNIT SUITABLE FOR POTABLE WATER APPLICATIONS
2. PROVIDE PUMP WITH ELECTRICALLY COMMUTATED MOTOR (ECM)

SYM	DESCRIPTION	DATE	APPR

NAVFAC

LICENSED PROFESSIONAL ENGINEER JITENDRA VALMIK 062-072817 STATE OF ILLINOIS
EXP: 11/30/2027
SIGNED: 03/11/2026 M.A.

ASMD LLC. A/E INFO

APPROVED
FOR COMMANDER NAVFAC
ACTIVITY
NATHANIEL PYRON, MILCON PLANNER, DPPH
SATISFACTORY TO DATE 3/10/2026
DES JV DRW AL CHK AP
PM/DM DKS/DMK
BRANCH MANAGER KYM
CHIEF ENG/ARCH KYM
FIRE PROTECTION RYO

DEPARTMENT OF THE NAVY
NAVAL FACILITIES ENGINEERING SYSTEMS COMMAND
NAVFAC PACIFIC
NAVAL FACILITIES ENGINEERING SYSTEMS COMMAND ~ PACIFIC
MAKALAPA, HAWAII
U.S. NAVSUPPACT
MCB CAMP BLAZ, GUAM
JFY 2022 PROJECT J-875
BATTLE STAFF TRAINING FACILITY
PLUMBING SCHEDULES - SHEET 1

SCALE: NTS
EPROJECT NO.: 1696746
CONSTR. CONTR. NO.
NAVFAC DRAWING NO. 17322075
SHEET 245 OF 468
PL600
DRAWFORM REVISION: 25 AUGUST 2020

3/11/2026 4:57:30 PM PL600
C:\REVIT_2024_PROJECT_FILES\BLDG-J-875-1696746-P_7542_Jon_Koenig.rvt

EXPANSION TANK PLUMBING (ET) SCHEDULE

PLAN DESIGNATION	SERVICE	TYPE	MIN TANK VOLUME (GAL)	MIN ACCEPTANCE VOLUME (GAL)	TANK RATED PRESSURE (PSIG)	MIN SYSTEM TEMPERATURE (°F)	MAX SYSTEM TEMPERATURE (°F)	MIN SYSTEM PRESSURE (PSIG)	MAX SYSTEM PRESSURE (PSIG)	SET PRESSURE (PSIG)	NOTES
ET-1	DOMESTIC HOT WATER	POTABLE WATER BLADDER TYPE EXPANSION TANK	10.0	10.0	150.0	80.0	140.0	19.7	135.0	19.7	(1) (2) (3) (4)

NOTES:
1. CONSTRUCTED IN ACCORDANCE WITH ASME SECTION VIII DIVISION 1
2. ROUTE DRAINS TO NEAREST FLOOR DRAIN
3. PROVIDE 4" CONCRETE EQUIPMENT PAD
4. PROVIDE TANK SUITABLE FOR DOMESTIC WATER SERVICE

SUMP PUMP (SMP) SCHEDULE

PLAN DESIGNATION	TYPE	SERVICE	LOCATION	FLOW RATE (GPM)	OPERATING HEAD (FT)	PUMP SPEED	MOTOR POWER (HP)	VOLTAGE	HZ	PHASE	DISCHARGE SIZE (IN)	NOTES
SMP-1	SUBMERSIBLE SUMP	WATER	ELEVATOR PIT	50	30	3450	0.5	115	60	1	2"	(1) (2)

NOTES:
1. PROVIDE PUMP WITH FLOAT SWITCH
2. PROVIDE CONTROL PANEL AND OIL DETECTION SYSTEM AND ALARM

SYM	DESCRIPTION	DATE	APPR

NAVFAC

LICENSED PROFESSIONAL ENGINEER
JITENDRA VALMIK
062-072817
OF ILLINOIS
EXP: 11/30/2027
SIGNED: 03/11/2026

ASMD LLC.
A/E INFO

APPROVED

FOR COMMANDER NAVFAC

ACTIVITY
NATHANIEL PYRON, MILCON PLANNER, DPPH

SATISFACTORY TO DATE 3/10/2026

DES JV | DRW AL | CHK AP

PM/DM DKS/DMK
BRANCH MANAGER KYM
CHIEF ENG/ARCH KYM
FIRE PROTECTION RYO

DEPARTMENT OF THE NAVY
NAVAL FACILITIES ENGINEERING SYSTEMS COMMAND
NAVFAC PACIFIC
NAVAL FACILITIES ENGINEERING SYSTEMS COMMAND ~ PACIFIC
MAKALAPA, HAWAII
U.S. NAVSUPPACT
MCB CAMP BLAZ, GUAM
JFY 2022 PROJECT J-875
BATTLE STAFF TRAINING FACILITY
PLUMBING SCHEDULES - SHEET 2

SCALE: NTS
EPROJECT NO.: 1696746
CONSTR. CONTR. NO.
NAVFAC DRAWING NO. 17322076
SHEET 246 OF 468
PL601
DRAWFORM REVISION: 25 AUGUST 2020

3/11/2026 4:57:33 PM PL601
C:\REVIT_2024_PROJECT_FILES\BLDG-J-875-1696746-P_7542_Jon_Koenig.rvt

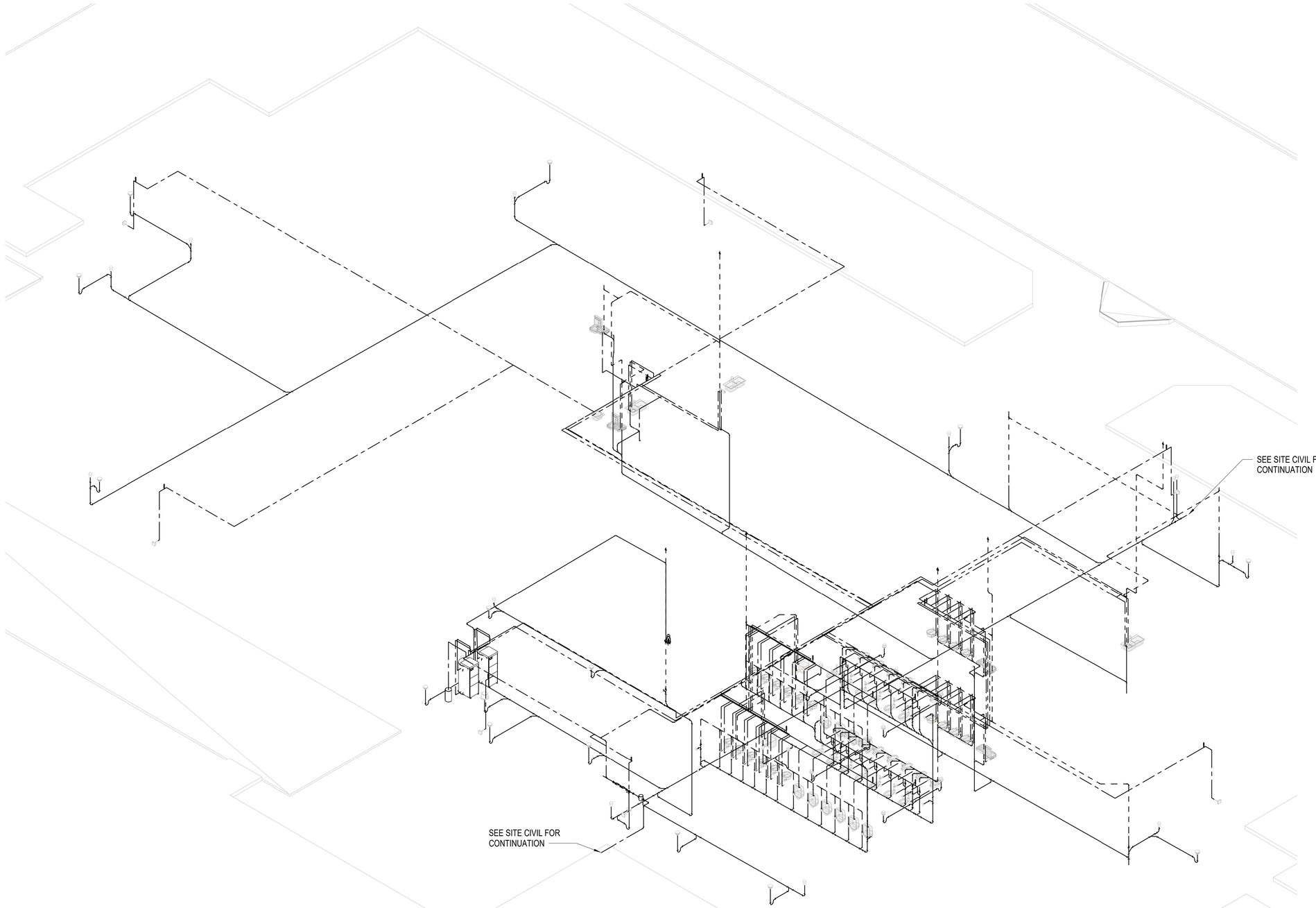

A1 **OVERALL PLUMBING ISOMETRIC**

SYM	DESCRIPTION	DATE	APPR

NAVFAC

LICENSED PROFESSIONAL ENGINEER
JITENDRA VALMIK
062-072817
OF ILLINOIS
EXP: 11/30/2027
SIGNED: 03/11/2026 M.A.

ASMD LLC.
A/E INFO

APPROVED

FOR COMMANDER NAVFAC

ACTIVITY
NATHANIEL PYRON, MILCON PLANNER, DPPH

SATISFACTORY TO DATE 3/10/2026

DES JV | DRW AL | CHK AP

PM/DM DKS/DMK

BRANCH MANAGER KYM

CHIEF ENG/ARCH KYM

FIRE PROTECTION RYO

DEPARTMENT OF THE NAVY
NAVAL FACILITIES ENGINEERING COMMAND
NAVFAC PACIFIC

NAVAL FACILITIES ENGINEERING SYSTEMS COMMAND
NAVAL FACILITIES ENGINEERING SYSTEMS COMMAND ~ PACIFIC
MAKALAPA, HAWAII

U.S. NAVSUPPACT

MCB CAMP BLAZ, GUAM

JFY 2022 PROJECT J-875
BATTLE STAFF TRAINING FACILITY

PLUMBING ISOMETRICS - OVERALL

SCALE: NTS

EPROJECT NO.: 1696746

CONSTR. CONTR. NO.

NAVFAC DRAWING NO.
17322077

SHEET 247 OF 468

PL901

DRAWFORM REVISION: 25 AUGUST 2020

3/11/2026 4:57:42 PM PL901
C:\REVIT_2024_PROJECT_FILES\BLDG-J-875-1696746-P_7542_Jon_Koenig.rvt

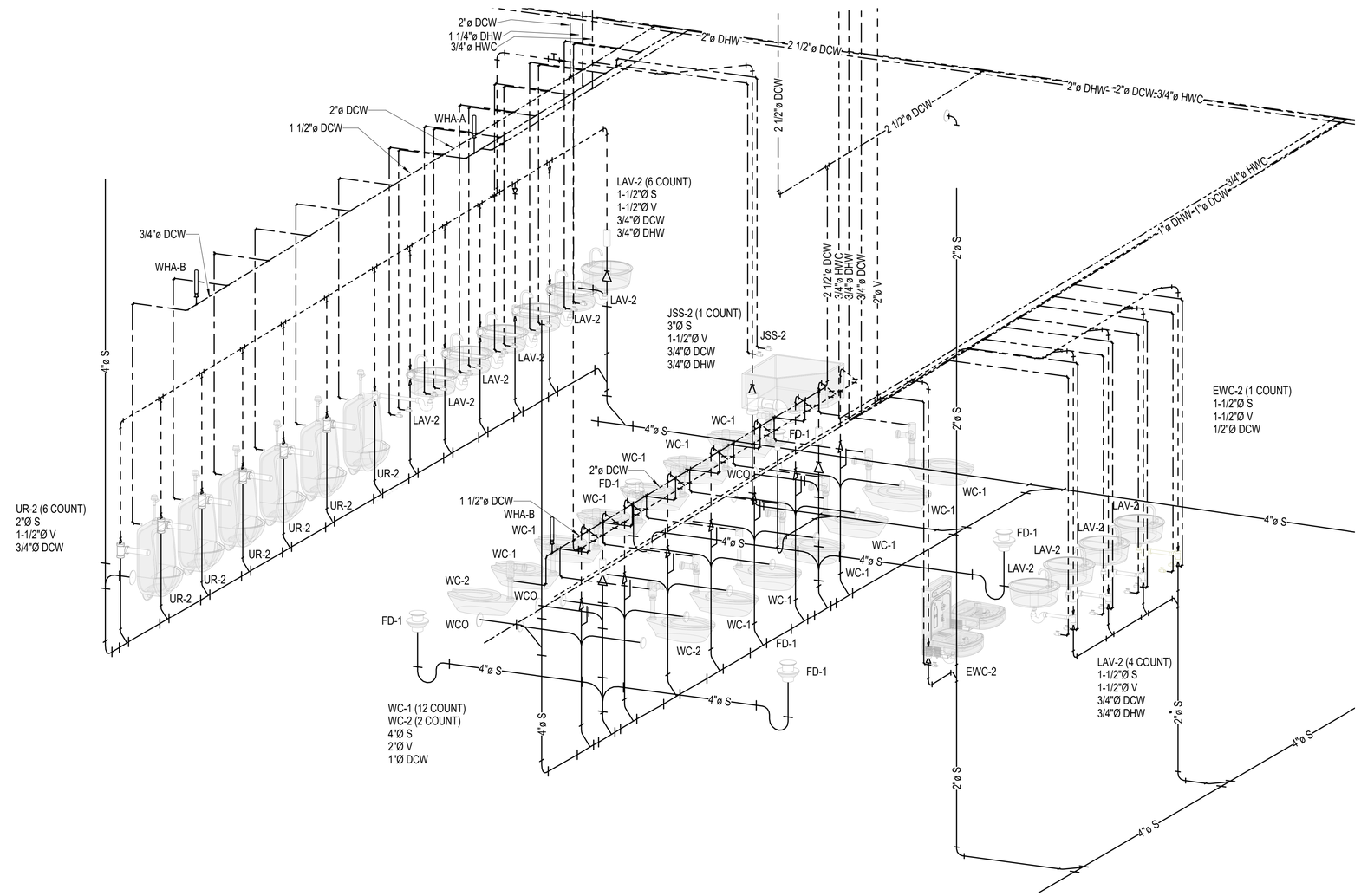

A3 FIRST FLOOR BATHROOM

SYM	DESCRIPTION	DATE	APPR

NAVFAC

LICENSED PROFESSIONAL ENGINEER
JITENDRA VALMIK
062-072817
OF ILLINOIS
EXP: 11/30/2027
SIGNED: 03/11/2026

ASMD LLC.
A/E INFO

APPROVED
FOR COMMANDER NAVFAC
ACTIVITY
NATHANIEL PYRON, MILCON PLANNER, DPPH

SATISFACTORY TO DATE	3/10/2026
DES JV	DRW AL CHK AP
PM/DM	DKS/DMK
BRANCH MANAGER	KYM
CHIEF ENG/ARCH	KYM
FIRE PROTECTION	RYO

DEPARTMENT OF THE NAVY
NAVFAC PACIFIC
U.S. NAVSUPPACT

NAVAL FACILITIES ENGINEERING SYSTEMS COMMAND
NAVAL FACILITIES ENGINEERING SYSTEMS COMMAND ~ PACIFIC
MAKALAPA, HAWAII

MCB CAMP BLAZ, GUAM

JFY 2022 PROJECT J-875
BATTLE STAFF TRAINING FACILITY

PLUMBING ISOMETRICS - FIRST FLOOR BATHROOM

SCALE: NTS
EPROJECT NO.: 1696746
CONSTR. CONTR. NO.
NAVFAC DRAWING NO.
17322078
SHEET 248 OF 468
PL902
DRAWFORM REVISION: 25 AUGUST 2020

3/11/2026 4:57:47 PM PL902
C:\REVIT_2024_PROJECT_FILES\BLDG-J-875-1696746-P_7542_Jon_Koenig.rvt

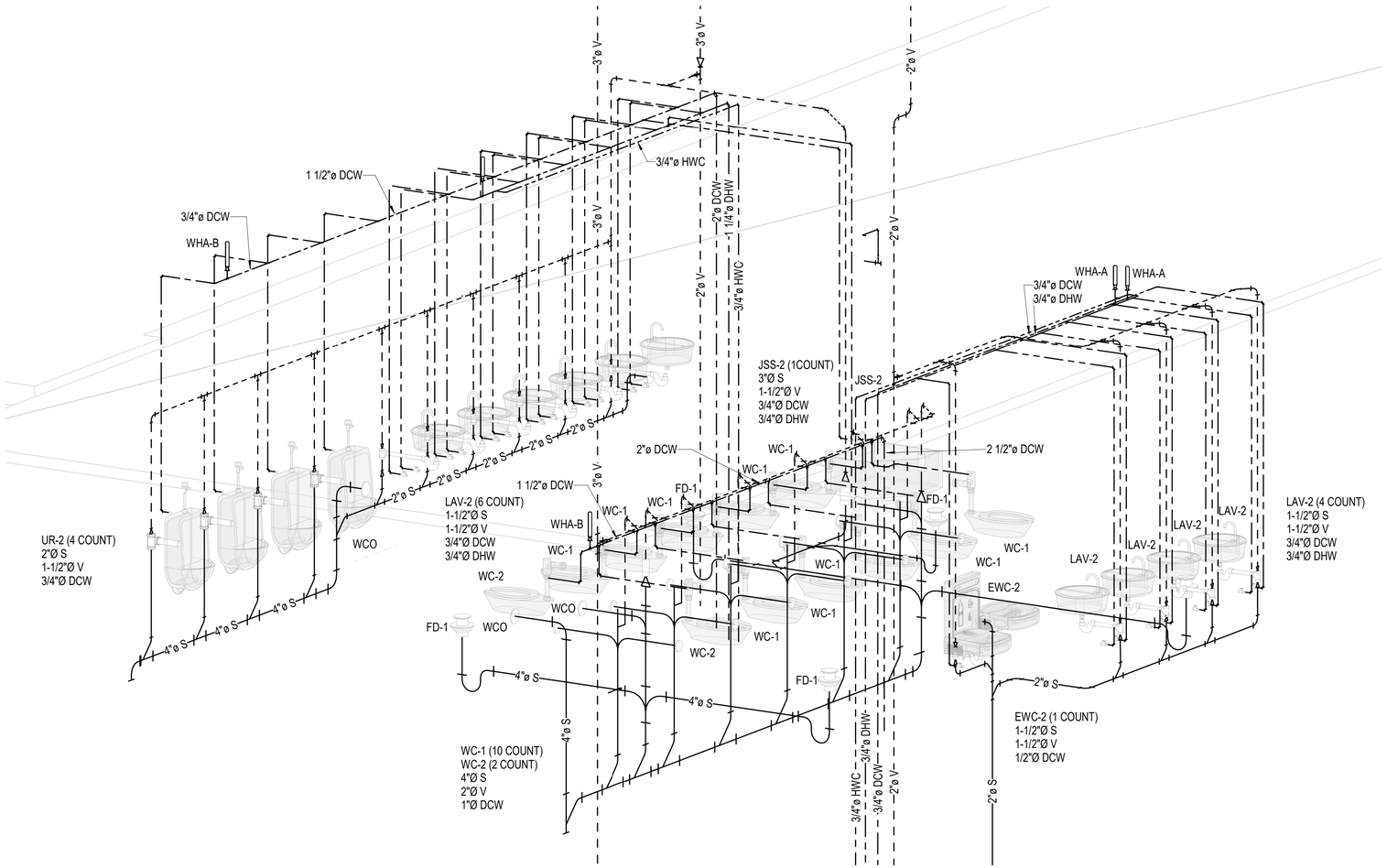

A3 SECOND FLOOR BATHROOM

SYM	DESCRIPTION	DATE	APPR

NAVFAC

LICENSED PROFESSIONAL ENGINEER
JITENDRA VALMIK
062-072817
OF ILLINOIS
EXP: 11/30/2027
SIGNED: 03/11/2026 M.A.

ASMD LLC.
A/E INFO

APPROVED

FOR COMMANDER NAVFAC

ACTIVITY
NATHANIEL PYRON, MILCON PLANNER, DPPH

SATISFACTORY TO DATE 3/10/2026

DES	JV	DRW	AL	CHK	AP

PMDM	DKS/DMK
BRANCH MANAGER	KYM
CHIEF ENG/ARCH	KYM
FIRE PROTECTION	RYO

DEPARTMENT OF THE NAVY
NAVAL FACILITIES ENGINEERING SYSTEMS COMMAND
NAVFAC PACIFIC
U.S. NAVSUPPACT

NAVAL FACILITIES ENGINEERING SYSTEMS COMMAND ~ PACIFIC
MAKALAPA, HAWAII
MCB CAMP BLAZ, GUAM

JFY 2022 PROJECT J-875
BATTLE STAFF TRAINING FACILITY

PLUMBING ISOMETRICS - SECOND FLOOR BATHROOM

SCALE: NTS
EPROJECT NO.: 1696746
CONSTR. CONTR. NO.
NAVFAC DRAWING NO. 17322079
SHEET 249 OF 468

PL903

DRAWFORM REVISION: 25 AUGUST 2020

3/11/2026 4:57:52 PM PL903
C:\REVIT_2024_PROJECT_FILES\BLDG-J-875-1696746-P_7542_Jon_Koenig.rvt

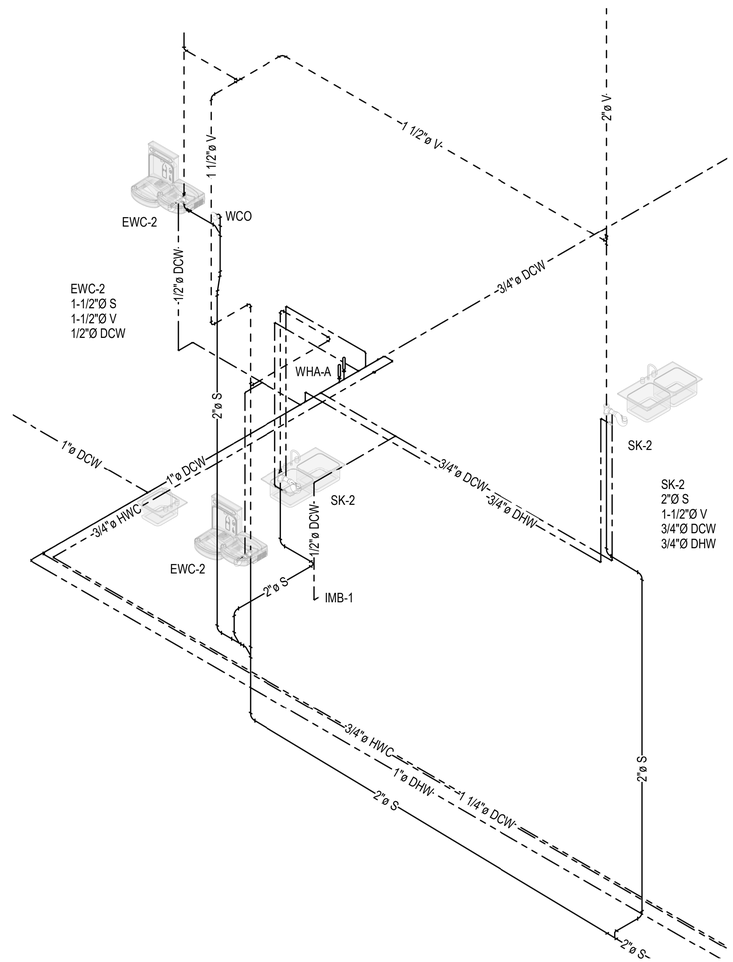

A3 ENLARGED PLUMBING ISOMETRIC

SYM	DESCRIPTION	DATE	APPR

NAVFAC

LICENSED PROFESSIONAL ENGINEER
JITENDRA VALMIK
062-072817
OF ILLINOIS
EXP: 11/30/2027
SIGNED: 03/11/2026 M.A.

ASMD LLC.
A/E INFO

APPROVED

FOR COMMANDER NAVFAC

ACTIVITY
NATHANIEL PYRON, MILCON PLANNER, DPPH

SATISFACTORY TO DATE 3/10/2026

DES JV | DRW AL | CHK AP

PM/DM DKS/DMK

BRANCH MANAGER KYM

CHIEF ENG/ARCH KYM

FIRE PROTECTION RYO

DEPARTMENT OF THE NAVY
NAVAL FACILITIES ENGINEERING SYSTEMS COMMAND
NAVFAC PACIFIC
U.S. NAVSUPPACT

NAVAL FACILITIES ENGINEERING SYSTEMS COMMAND – PACIFIC
MAKALAPA, HAWAII

MCB CAMP BLAZ, GUAM

JFY 2022 PROJECT J-875
BATTLE STAFF TRAINING FACILITY

PLUMBING ISOMETRICS - ENLARGED VIEW

SCALE: NTS

EPROJECT NO.: 1696746

CONSTR. CONTR. NO.

NAVFAC DRAWING NO.
17322080

SHEET 250 OF 468

PL905

DRAWFORM REVISION: 25 AUGUST 2020

3/11/2026 4:57:55 PM PL905
C:\REVIT_2026_PROJECT_FILES\BLDG-J-875-1696746-P_7542_Jon_Koenig.rvt

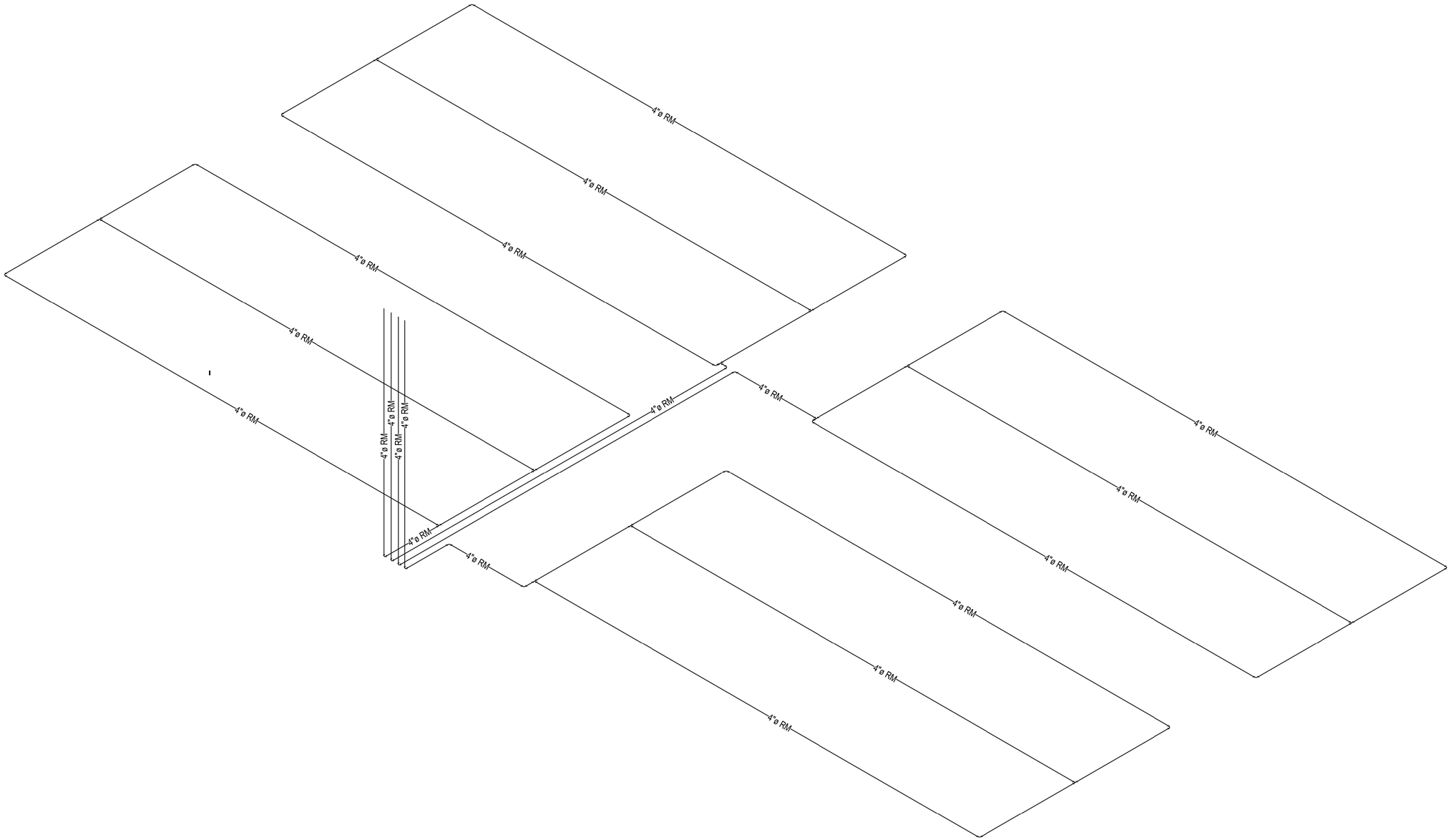

A2 OVERALL PLUMBING ISOMETRIC SPECIAL SYSTEMS

SYM	DESCRIPTION	DATE	APPR

NAVFAC

LICENSED PROFESSIONAL ENGINEER
JITENDRA VALMIK
062-072817
OF ILLINOIS
EXP: 11/30/2027
SIGNED: 03/11/2026 M.A.

ASMD LLC.
A/E INFO

APPROVED

FOR COMMANDER NAVFAC

ACTIVITY
NATHANIEL PYRON, MILCON PLANNER, DPPH

SATISFACTORY TO DATE 3/10/2026

DES	DRW	CHK
JV	AL	AP

PM/DM DKS/DMK
BRANCH MANAGER KYM
CHIEF ENG/ARCH KYM
FIRE PROTECTION RYO

DEPARTMENT OF THE NAVY
NAVFAC PACIFIC
U.S. NAVSUPPACT

NAVAL FACILITIES ENGINEERING SYSTEMS COMMAND
NAVAL FACILITIES ENGINEERING SYSTEMS COMMAND ~ PACIFIC
MAKALAPA, HAWAII

MCB CAMP BLAZ, GUAM

JFY 2022 PROJECT J-875
BATTLE STAFF TRAINING FACILITY

PLUMBING ISOMETRICS - SPECIAL SYSTEMS

SCALE: NTS
EPROJECT NO.: 1696746
CONSTR. CONTR. NO.
NAVFAC DRAWING NO. 17322081
SHEET 251 OF 468

PL906

DRAWFORM REVISION: 25 AUGUST 2020

3/11/2026 4:57:59 PM PL906
C:\REVIT_2024_PROJECT_FILES\BLDG-J-875-1696746-P_7542_Jon_Koenig.rvt

MECHANICAL LEGEND

- THERMOSTAT
- HUMIDITY SENSOR
- AIR TERMINAL TAG WITH AIR FLOW (CFM) (A / 150)
- EMERGENCY HVAC SYSTEM SHUTOFF SWITCH ($)
- SPACE CO2 SENSOR / DDC POINT TAG (XXX)
- 12"x10" RECTANGULAR DUCT DIMENSIONS (INCHES)
- 12"Ø ROUND DUCT DIMENSION
- FLEXIBLE ROUND DUCT (5'-0" MAX LENGTH)
- DOWNWARD DIRECTION OF SLOPED PIPING
- SUPPLY DUCT, SUPPLY DUCT DOWN/UP
- RETURN DUCT, RETURN DUCT DOWN/UP
- 2-WAY VALVE
- 3-WAY VALVE
- AUTOMATIC BALANCING VALVE
- BALL VALVE
- BUTTERFLY VALVE
- CHECK VALVE
- DRAIN VALVE
- GATE VALVE
- GLOBE VALVE
- MANUAL FLOW CONTROL BALANCING VALVE
- PRESSURE REDUCING VALVE
- RELIEF VALVE
- SOLENOID VALVE
- SQAURE HEAD BALANCING VALVE
- TEMPERATURE PRESSURE RELIEF VALVE
- BACKFLOW PREVENTER
- AUTOMATIC AIR VENT
- ECCENTRIC REDUCER
- FLANGE
- MANUAL AIR VENT
- PIPE CAP
- PIPE DOWN
- SUCTION REDUCER
- PIPE UP
- PRESSURE GAUGE WITH SHUTOFF COCK
- STEAM TRAP
- STRAINER WITH BLOWDOWN VALVE
- THERMOMETER
- UNION
- VACUUM BREAKER
- WYE STRAINER
- DPS — DIFFERENTIAL PRESSURE SENSOR (DUCTWORK)
- NEW WORK NOTE TAG
- DEMOLITION NOTE TAG
- POINT OF CONNECTION TAG
- POINT OF DISCONNECTION TAG
- * POINT SUPPLIED BY UNIT MANUFACTURER
- AVERAGING TEMPERATURE SENSOR

- VERTICAL (WALL) FIRE DAMPER
- HORIZONTAL (CEILING) FIRE DAMPER
- AD — ACCESS DOOR (AD), ACCESS PANEL (AP)
- VOLUME DAMPER
- EXHAUST AIR (NEG.) DUCT SECTION
- VRF CEILING CASSETTE
- VRF CEILING CASSETTE DUCTED
- VRF DUCTED FAN COIL UNIT
- VENT THRU FLOOR/ ROOF
- RISE IN DUCT (POINT IS HIGH)

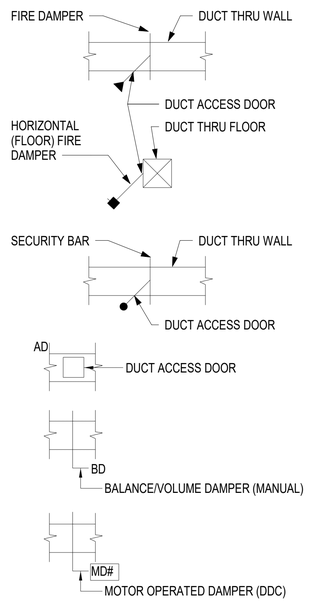

DETAIL/SECTION TITLE	DETAIL CALLOUT SYMBOL	SECTION CUT SYMBOL
SECTION, DETAIL OR ELEVATION IDENTIFICATION MARK SECTION, DETAIL OR ELEVATION TITLE PLATE NUMBER WHERE SECTION, DETAIL OR ELEVATION IS TAKEN (XX / X-XXX)	DETAIL NUMBER PLATE NUMBER WHERE DETAIL IS DRAWN (XX / X-XXX)	SECTION LETTER PLATE NUMBER WHERE SECTION IS DRAWN VIEW SECTION (XX / X-XXX)

MECHANICAL PIPING LEGEND

– – –(NAME) – – –	PIPING TO BE REMOVED
——CWR——	CONDENSER WATER RETURN PIPING
– – –CWS– – –	CONDENSER WATER SUPPLY PIPING
– – –CHWR– – –	CHILLED WATER RETURN PIPING
– – –CHWS– – –	CHILLED WATER SUPPLY PIPING
——CND——	CONDENSATE DRAIN PIPING
– – –DCW– – –	DOMESTIC COLD WATER PIPING
——DHW——	DOMESTIC HOT WATER PIPING
——DTR——	DUAL TEMPERATURE RETURN PIPING
– – – DTS – – –	DUAL TEMPERATURE SUPPLY PIPING
——G——	NATURAL GAS PIPING
——HG——	HOT GAS BYPASS PIPING
——HPS——	HIGH PRESSURE STEAM PIPING
——HWR——	HOT WATER RETURN PIPING
– – –HWS– – –	HOT WATER SUPPLY PIPING
——LPC——	LOW PRESSURE CONDENSATE PIPING
——LPS——	LOW PRESSURE STEAM PIPING
– – – RL – – –	REFRIGERANT LIQUID PIPING
——RS——	REFRIGERANT SUCTION PIPING
——VAC——	VACUUM (AIR)

MECHANICAL ABBREVIATIONS

A/C	AIR CONDITIONING
AC	ABOVE CEILING
AD	ACCESS DOOR
AFD	ACCESS FLOOR DIFFUSER
AFF	ABOVE FINISHED FLOOR
AHU	AIR HANDLING UNIT
AI	ANALOG INPUT
AIP	ABANDON IN PLACE
AL	ACOUSTIC LINING (DUCTWORK)
AO	ANALOG OUTPUT
AP	ACCESS PANEL
APD	AIR PRESSURE DROP
AS	AIR SEPARATOR
ATFP	ANTI-TERRORISM FORCE PROTECTION
AV	ANALOG VALUE
B	BOILER
BAS	BUILDING AUTOMATIC SYSTEM (DDC)
BD	BALANCING DAMPER
BDD	BACKDRAFT DAMPER (DUCTWORK)
BG	BELOW GROUND
BHP	BRAKE HORSEPOWER
BI	BINARY INPUT
BO	BINARY OUTPUT
BOD	BOTTOM OF DUCT
BR	BASEBOARD RADIATOR
BSB	BRANCH SELECTOR BOX (VRF)
BTUH	BRITISH THERMAL UNITS PER HOUR
BV	BINARY VALUE
CC	CEILING CASSETTE / COOLING COIL
CD	CEILING DIFFUSER
CER	CEILING EXHAUST REGISTER
CFM	CUBIC FEET PER MINUTE
CFT	CHEMICAL FEED TANK
CH	CHILLER
CHP	CHILLER PUMP
CHR	CHILLED WATER RETURN
CHS	CHILLED WATER SUPPLY
CLG	CEILING
CND	CONDENSER
COP	COEFFICIENT OF PERFORMANCE
COV	CHANGE OF VALUE
CRAHU	COMPUTER ROOM HANDLING UNIT
CRG	CEILING RETURN GRILLE
CSD	CEILING SUPPLY DIFFUSER
CT	COOLING TOWER
CTG	CEILING TRANSER GRILLE
CU	CONDENSING UNIT
CUH	CABINET UNIT HEATER

MECHANICAL ABBREVIATIONS

Cv	LOSS COEFFICIENT
CW	CHILLED WATER
DB	DRY BULB
DCW	DOMESTIC COLD WATER (POTABLE)
DDC	DIRECT DIGITAL CONTROL
DEG	DEGREE
DIA	DIAMETER
DOAS	DEDICATED OUTSIDE AIR UNIT
DWGS	DRAWINGS
DX	DIRECT EXPANSION
EA	EXHAUST AIR
EAT	ENTERING AIR TEMPERATURE
EC	ELECTRIONICALLY COMMUTATED (MOTOR) / ELECTRIC HEAT COIL
EER	ENERGY EFFICENCY RATIO
EF	EXHAUST FAN
EFF	EFFECTIVENESS / EFFICIENCY
EH	ELECTRIC HEAT
ERV	ENERGY RECOVERY VENTILATOR
ESP	EXTERNAL STATIC PRESSURE
ET	EXPANSION TANK
ETR	EXISTING TO REMAIN
EWH	ELECTRIC WATER HEATER
EWT	ENTERING WATER TEMPERATURE
F	FAHRENHEIT
FCU	FAN COIL UNIT
FD	FIRE DAMPER
FT	FEET
FT WG	FEET WATER GAUGE
G	NATURAL GAS
GP	GLYCOL PUMP
GPM	GALLONS PER MINUTE
GRH	GRAVITY ROOF HOOD
H	HUMIDIFIER (ELECTRIC)
HC	HEAT COIL (DX)
HGRC	HOT GAS REHEAT COIL (DX)
HGRH	HOT GAS REHEAT
HHWS	HOT HEATING WATER SYSTEM
HP	HEAT PUMP, HORSEPOWER
HR	HOUR / HEAT RECOVERY
HT	HEIGHT
HW	HOT WATER
HWP	HOT WATER PUMP
HX	HEAT EXCHANGER
IAW	IN ACCORDANCE WITH
IBS	IN BEAM SPACE
IC	IN CEILING
IDU	INDOOR UNIT (VRF)
IN.	INCH
IWG	INCHES WATER GAUGE
KW	KILOWATT
LBS	POUNDS
LPS	LOW PRESSURE STEAM
LV	LOUVER
LWT	LEAVING WATER TEMPERATURE
MAU	MAKE-UP AIR UNIT
MAX	MAXIMUM
MBH	1,000 BTUH
MCA	MAXIMUM CIRCUIT AMPS
MD	MOTOR OPERATED DAMPER
MIN	MINIMUM
NC	NORMALLY CLOSED, NOISE CRITERIA
NO	NUMBER, NORMALLY OPEN
NP	NOT PROVIDED
OA	OUTSIDE AIR
OAU	OUTSIDE AIR UNIT
OCC	OCCUPANCY
ODU	OUTDOOR UNIT (VRF)
OF	ON FLOOR
OG	ON GRADE
OH	OPPOSITE HAND
OR	ON ROOF
OW	ON WALL
PA	PRIMARY AIR (VAV TERMINAL)
PH	PHASE
PRV	POWER ROOF VENTILATOR
PSIG	POUNDS PER SQUARE INCH GAUGE
PTAC	PACKAGED TERMINAL AIR CONDITIONING UNIT
PTHP	PACKAGED TERMINAL HEAT PUMP
PTP	PRESSURE/TEMPERATURE TEST PORT
QTY	QUANTITY
RA	RETURN AIR
RC-X	REHEAT COIL - NUMBER
RD	ROOF DRAIN

MECHANICAL ABBREVIATIONS

RH	RELATIVE HUMIDITY
RL	REFRIGERANT LIQUID
RS	REFRIGERANT SUCTION
RTU	ROOFTOP UNIT
SA	SUPPLY AIR
SAT	SUPPLY AIR TEMPERATURE
SD	STORM DRAIN
SEER	SEASONAL ENERGY EFFICIENCY RATIO
SF-X	SUPPLY FAN - NUMBER
SIM	SIMILAR
SP	STATIC PRESSURE
SQ	SQUARE
SQFT	SQUARE FEET
TC	THRU CEILING
TF	THRU FLOOR
TR	THRU ROOF
TYP.	TYPICAL
UH	UNIT HEATER
UOI	UNLESS OTHERWISE INDICATED
UON	UNLESS OTHERWISE NOTED
V	VOLTS
VAV	VARIABLE AIR VOLUME
VFD	VARIABLE FREQUENCY DRIVE
VRF	VARIABLE REFRIGERANT FLOW
VWV	VARIABLE WATER VOLUME
W	WIDTH
WB	WET BULB
WC	WATER COLUMN (PRESSURE)
WH	WALL HOOD
WPD	WATER PRESSURE DROP
°	DEGREES
Ø	DIAMETER
Φ	OVAL

GENERAL MECHANICAL NOTES

1. THESE GENERAL MECHANICAL NOTES APPLY TO ALL MECHANICAL DRAWINGS IN THIS SET. SHEET SPECIFIC NOTES ARE INDICATED ON EACH SHEET UNDER GENERAL SHEET NOTES.
2. PROVIDE ALL MATERIALS AND EQUIPMENT AND PERFORM ALL LABOR REQUIRED TO INSTALL COMPLETE AND OPERABLE MECHANICAL SYSTEMS AS INDICATED ON THE DRAWINGS, AS SPECIFIED, AND AS REQUIRED BY CODE.
3. INSTALL ALL MECHANICAL EQUIPMENT AND APPURTENANCES IN ACCORDANCE WITH MANUFACTURER'S RECOMMENDATIONS, CONTRACT DOCUMENTS, APPLICABLE CODES, AND REGULATIONS.
4. CONCEAL ALL DUCTWORK AND PIPING ABOVE SUSPENDED CEILINGS AND IN WALLS, UNLESS OTHERWISE NOTED.
5. PROVIDE VIBRATION ISOLATORS FOR ALL MECHANICAL EQUIPMENT AND PIPING TO PREVENT TRANSMISSION OF VIBRATION TO BUILDING STRUCTURE.
6. PROVIDE ACCESS PANELS IN WALLS AND CEILINGS, WHERE REQUIRED, TO SERVE FIRE DAMPERS, VALVES, SMOKE DETECTORS, AND OTHER CONCEALED MECHANICAL EQUIPMENT THAT REQUIRES ROUTINE MAINTENANCE. ACCESS PANELS SHALL BE SIZED AS REQUIRED TO ALLOW WORKING CLEARANCE FOR DUCT ACCESS DOORS.
7. ALL 90 DEGREE RECTANGULAR MITERED DUCT ELBOWS IN SUPPLY AND RETURN DUCTWORK SHALL HAVE TURNING VANES. PROVIDE AN ACCESS DOOR UPSTREAM OF ELBOW FOR TURNING VANE INSPECTION AND CLEANING.
8. PROVIDE PIPE SLEEVES FOR ALL PIPING PENETRATIONS THRU WALLS AND FLOORS. EACH PIPE SHALL BE SEPARATELY SLEEVED. PROVIDE CONTINUOUS SEALANT JOINT AROUND PIPE SLEEVE, BOTH SIDES OF WALL, WATERTIGHT.
9. ALL OPENINGS IN FIRE WALLS DUE TO DUCTWORK, PIPING, CONDUIT, ETC., SHALL BE FIRE STOPPED.
10. PROVIDE P-TRAPS IN CONDENSATE DRAIN PIPING AT EACH AC UNIT UNLESS THE RTU IS EQUIPPED WITH AN INTERNAL TRAP.
11. CONDENSATE DRAIN PIPING CLEANOUTS SHALL BE INSTALLED AT EACH CHANGE IN DIRECTION GREATER THAN 45 DEGREES. WHERE MORE THAN ONE CHANGE OF DIRECTION OCCURS IN A RUN OF PIPING, ONLY ONE CLEANOUT SHALL BE REQUIRED FOR EACH 40 FEET OF DEVELOPED LENGTH. COMBINATION WYE AND 1/8 BENDS SHALL BE USED IN LIEU OF TEES. UNLESS OTHERWISE INDICATED ALL CONDENSATE LINES SHALL SLOPE DOWNWARD AND BE GRAVITY FED.
12. MOUNT THERMOSTATS 48 INCHES ABOVE THE FINISHED FLOOR AND RECESSED, FLUSH WITH WALL SURFACE, WHERE POSSIBLE UNLESS OTHERWISE NOTED. SEE ELECTRICAL DRAWINGS FOR COORDINATION WITH LIGHT SWITCHES.
13. TESTING AND BALANCING (TAB): TAB ALL EQUIPMENT AND DUCTWORK; 2-SEASONS. SEE SECTION 23 05 93 FOR COMPLETE REQUIREMENTS.
14. MECHANICAL EQUIPMENT, WHICH IS PROVIDED WITH MANUFACTURER'S INSTALLED CONTROLS, SHALL BE STARTED UP BY THE MANUFACTURER'S REPRESENTATIVE IN CONJUNCTION WITH THE CONTROLS CONTRACTOR (NOT MECHANICAL CONTRACTOR). TRAINING AND MANUALS FOR THE MANUFACTURER'S INSTALLED CONTROLS SHALL BE PROVIDED BY THE EQUIPMENT MANUFACTURER'S REPRESENTATIVE. CONTROLS CONTRACTOR IS RESPONSIBLE FOR COORDINATING WITH MANUFACTURER'S REPRESENTATIVE FOR THE COMMUNICATION OF THE DDC SYSTEM TO THE MANUFACTURER'S INSTALLED CONTROLS.

SYM	DESCRIPTION	DATE	APPR

NAVFAC

LICENSED PROFESSIONAL ENGINEER JITENDRA VALMIK 062-072817 OF ILLINOIS
EXP: 11/30/2027
SIGNED: 03/11/2026

ASMD LLC.

APPROVED
FOR COMMANDER NAVFAC
ACTIVITY: NATHANIEL PYRON, MILCON PLANNER, DPPH
SATISFACTORY TO DATE 3/10/2026
DES JV DRW AS CHK AP
PM/DM DKS/DMK
BRANCH MANAGER KYM
CHIEF ENG/ARCH KYM
FIRE PROTECTION RYO

NAVAL FACILITIES ENGINEERING SYSTEMS COMMAND
MAKALAPA, HAWAII
MCB CAMP BLAZ, GUAM
DEPARTMENT OF THE NAVY
NAVAL FACILITIES ENGINEERING SYSTEMS COMMAND ~ PACIFIC
NAVFAC PACIFIC
U.S. NAVSUPPACT
JFY 2022 PROJECT J-875
BATTLE STAFF TRAINING FACILITY
MECHANICAL LEGEND, ABBREVIATIONS AND NOTES

SCALE: NTS
EPROJECT NO.: 1696746
CONSTR. CONTR. NO.
NAVFAC DRAWING NO. 17322092
SHEET 252 OF 468
M-001

DRAWFORM REVISION: 25 AUGUST 2020

3/11/2026 4:35:29 PM M-001
C:\REVIT_2024_PROJECT_FILES\BLDG-J-875-1696746-M_7542_Jon_Koenig.rvt

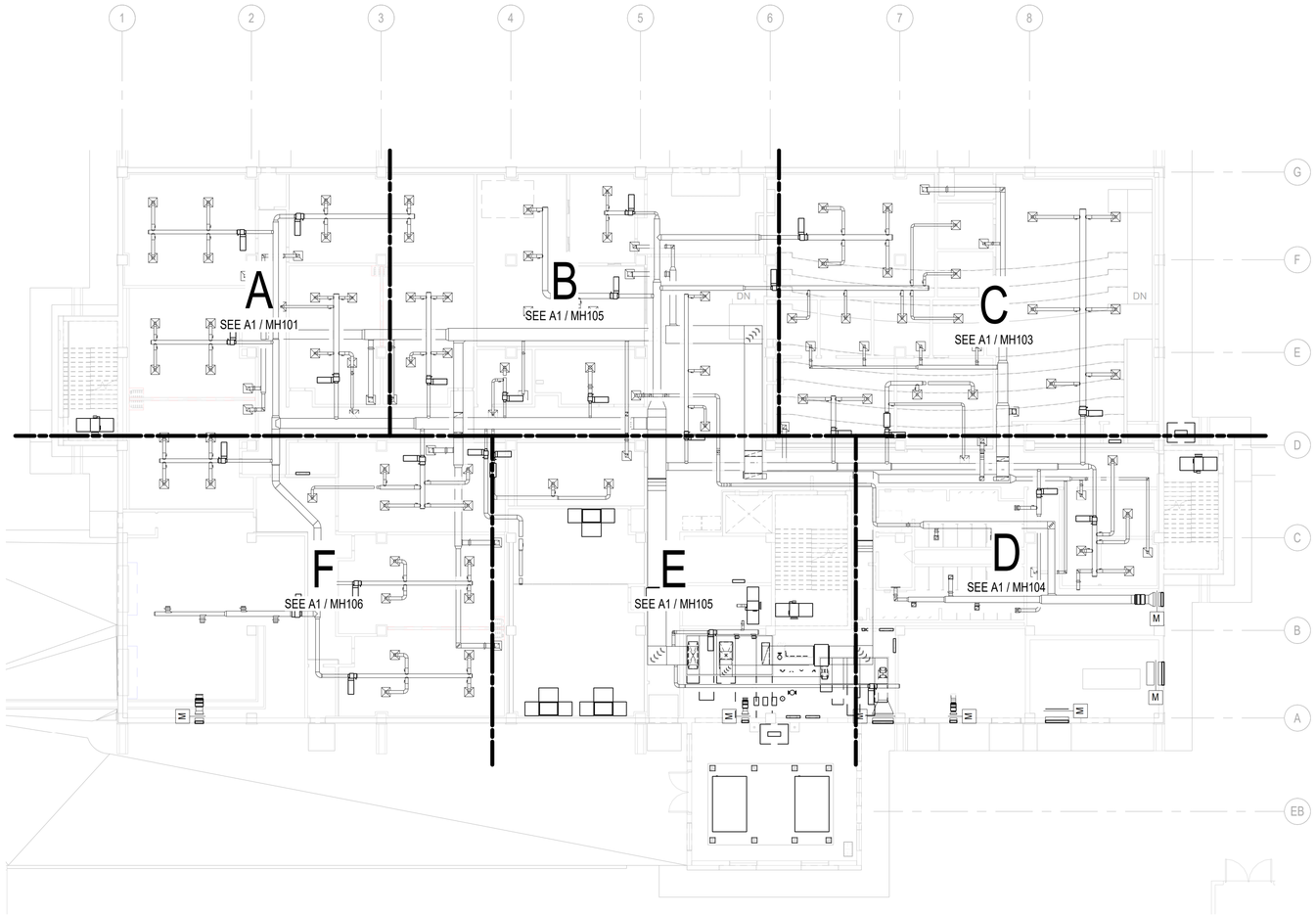

B1 COMPOSITE HVAC DUCT PLAN - FIRST FLOOR

1/16" = 1'-0"

GENERAL NOTES

KEY PLAN

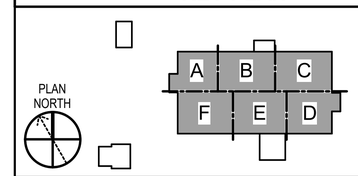

GRAPHIC SCALE(S)

1/16" = 1' - 0" 0 5' 10' 20' 30' 60'

SYM	DESCRIPTION	DATE	APPR

NAVFAC

LICENSED PROFESSIONAL ENGINEER
JITENDRA VALMIK
062-072817
OF ILLINOIS
EXP: 11/30/2027
SIGNED: 03/11/2026

ASMD LLC.

APPROVED

FOR COMMANDER NAVFAC

ACTIVITY
NATHANIEL PYRON, MILCON PLANNER, DPPH

SATISFACTORY TO DATE 3/10/2026

DES JV DRW AS CHK AP

PM/DM DKS/DMK

BRANCH MANAGER KYM

CHIEF ENG/ARCH KYM

FIRE PROTECTION RYO

DEPARTMENT OF THE NAVY
NAVFAC PACIFIC
U.S. NAVSUPPACT

NAVAL FACILITIES ENGINEERING SYSTEMS COMMAND
NAVAL FACILITIES ENGINEERING SYSTEMS COMMAND – PACIFIC
MAKALAPA, HAWAII

MCB CAMP BLAZ, GUAM

JFY 2022 PROJECT J-875
BATTLE STAFF TRAINING FACILITY

COMPOSITE HVAC DUCT PLAN - FIRST FLOOR

SCALE: AS NOTED

EPROJECT NO.: 1696746

CONSTR. CONTR. NO.

NAVFAC DRAWING NO.
17322093

SHEET 253 OF 468

MH100

DRAWFORM REVISION: 25 AUGUST 2020

3/11/2026 4:35:34 PM MH100
C:\REVIT_2024_PROJECT_FILES\BLDG-J875-1696746-M_7542_Jon_Koenig.rvt

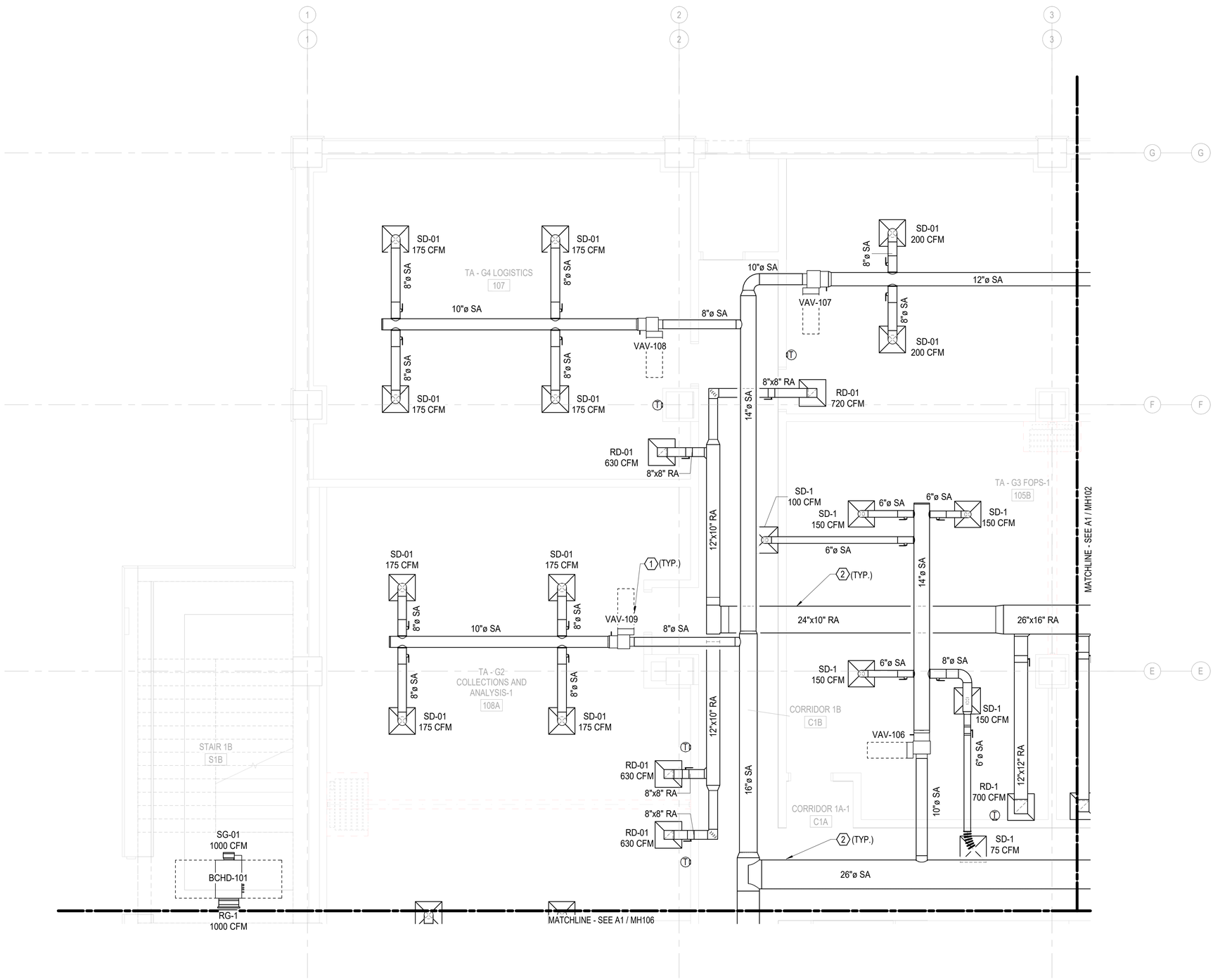

A1 HVAC DUCT PLAN - FIRST FLOOR - AREA 'A'

1/4" = 1'-0"

GENERAL NOTES

1. SEE M-001 FOR GENERAL MECHANICAL NOTES THAT SHALL APPLY TO ALL SHEETS UNLESS NOTED OTHERWISE.
2. MAXIMUM BEND FOR FLEX DUCTS IS 45° AND MAXIMUM LENGTH OF DUCT IS 5'-0".
3. CONTRACTOR SHALL REFER TO MECHANICAL DETAILS AND SPECIFICATIONS FOR ADDITIONAL INSTALLATION REQUIREMENTS.

KEY NOTES

1. PROVIDE NEW VAV BOX AS INDICATED PER SCHEDULE. INSTALL PER MANUFACTURER INSTALLATION INSTRUCTIONS. MAINTAIN RECOMMENDED CLEARANCES FOR SERVICE & MIN. STRAIGHT LENGHT UPSTREAM OF VAV . SEE DETAIL FOR PIPING & INSTALLATION.
2. PROVIDE NEW SUPPLY, RETURN, EXHAUST & TRANSFER DUCTWORK AS INDICATED. INSULATE DUCTWORK PER SPECIFICATIONS. INSTALL PER DETAIL. COORDINATE EXACT ROUTING IN FIELD WITH OTHER TRADES.

KEY PLAN

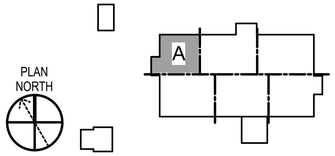

GRAPHIC SCALE(S)

1/4" = 1' - 0" 0 1' 5' 10' 15'

SYM	DESCRIPTION	DATE	APPR

LICENSED PROFESSIONAL ENGINEER
JITENDRA VALMIK
062-072817
OF ILLINOIS
EXP: 11/30/2027
SIGNED: 03/11/2026

APPROVED
FOR COMMANDER NAVFAC
ACTIVITY
NATHANIEL PYRON, MILCON PLANNER, DPPH
SATISFACTORY TO DATE 3/10/2026
DES JV DRW AS CHK AP
PM/DM DKS/DMK
BRANCH MANAGER KYM
CHIEF ENG/ARCH KYM
FIRE PROTECTION RYO

DEPARTMENT OF THE NAVY
NAVFAC PACIFIC
U.S. NAVSUPPACT
NAVAL FACILITIES ENGINEERING SYSTEMS COMMAND – PACIFIC
NAVAL FACILITIES ENGINEERING SYSTEMS COMMAND
MAKALAPA, HAWAII
MCB CAMP BLAZ, GUAM
JFY 2022 PROJECT J-875
BATTLE STAFF TRAINING FACILITY
HVAC DUCT PLAN - FIRST FLOOR - AREA 'A'

SCALE: AS NOTED
EPROJECT NO.: 1696746
CONSTR. CONTR. NO.
NAVFAC DRAWING NO. 17322094
SHEET 254 OF 468
MH101

DRAWFORM REVISION: 25 AUGUST 2020

3/11/2026 4:35:38 PM MH101
C:\REVIT_2024_PROJECT_FILES\BLDG-J-875-1696746-M_7542_Jon_Koenig.rvt

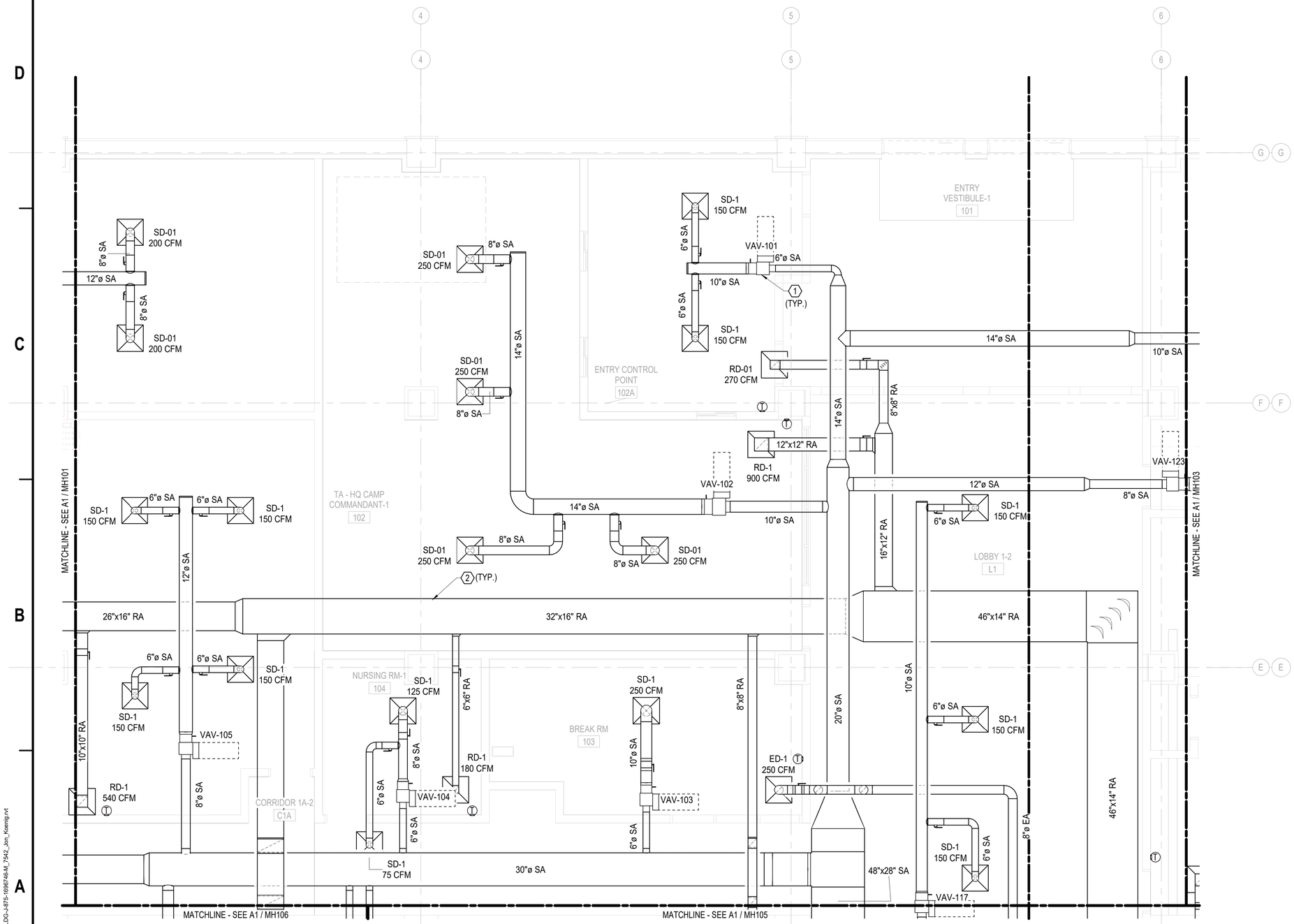

A1 HVAC DUCT PLAN - FIRST FLOOR - AREA 'B'

1/4" = 1'-0"

GENERAL NOTES

1. SEE M-001 FOR GENERAL MECHANICAL NOTES THAT SHALL APPLY TO ALL SHEETS UNLESS NOTED OTHERWISE.
2. MAXIMUM BEND FOR FLEX DUCTS IS 45° AND MAXIMUM LENGTH OF DUCT IS 5'-0".
3. CONTRACTOR SHALL REFER TO MECHANICAL DETAILS AND SPECIFICATIONS FOR ADDITIONAL INSTALLATION REQUIREMENTS.

KEY NOTES

1. PROVIDE NEW VAV BOX AS INDICATED PER SCHEDULE. INSTALL PER MANUFACTURER INSTALLATION INSTRUCTIONS. MAINTAIN RECOMMENDED CLEARANCES FOR SERVICE & MIN. STRAIGHT LENGHT UPSTREAM OF VAV . SEE DETAIL FOR PIPING & INSTALLATION.
2. PROVIDE NEW SUPPLY, RETURN, EXHAUST & TRANSFER DUCTWORK AS INDICATED. INSULATE DUCTWORK PER SPECIFICATIONS. INSTALL PER DETAIL. COORDINATE EXACT ROUTING IN FIELD WITH OTHER TRADES.

KEY PLAN

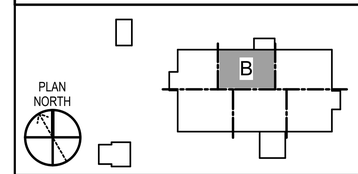

GRAPHIC SCALE(S)

1/4" = 1' - 0" 0 1' 5' 10' 15'

SYM	DESCRIPTION	DATE	APPR

NAVFAC

LICENSED PROFESSIONAL ENGINEER
JITENDRA VALMIK
062-072817
OF ILLINOIS
EXP: 11/30/2027
SIGNED: 03/11/2026

ASMD LLC.
A/E INFO

APPROVED
FOR COMMANDER NAVFAC
ACTIVITY
NATHANIEL PYRON, MILCON PLANNER, DPPH
SATISFACTORY TO DATE 3/10/2026
DES JV DRW AS CHK AP
PM/DM DKS/DMK
BRANCH MANAGER KYM
CHIEF ENG/ARCH KYM
FIRE PROTECTION RYO

DEPARTMENT OF THE NAVY
NAVAL FACILITIES ENGINEERING SYSTEMS COMMAND
NAVFAC PACIFIC
U.S. NAVSUPPACT
NAVAL FACILITIES ENGINEERING SYSTEMS COMMAND ~ PACIFIC
MAKALAPA, HAWAII
MCB CAMP BLAZ, GUAM
JFY 2022 PROJECT J-875
BATTLE STAFF TRAINING FACILITY
HVAC DUCT PLAN - FIRST FLOOR - AREA 'B'

SCALE: AS NOTED
EPROJECT NO.: 1696746
CONSTR. CONTR. NO.
NAVFAC DRAWING NO. 17322095
SHEET 255 OF 468
MH102

DRAWFORM REVISION: 25 AUGUST 2020

3/11/2026 4:35:43 PM MH102
C:\REVIT_2024_PROJECT_FILES\BLDG-J875-1696746-M_7542_Jon_Koenig.rvt

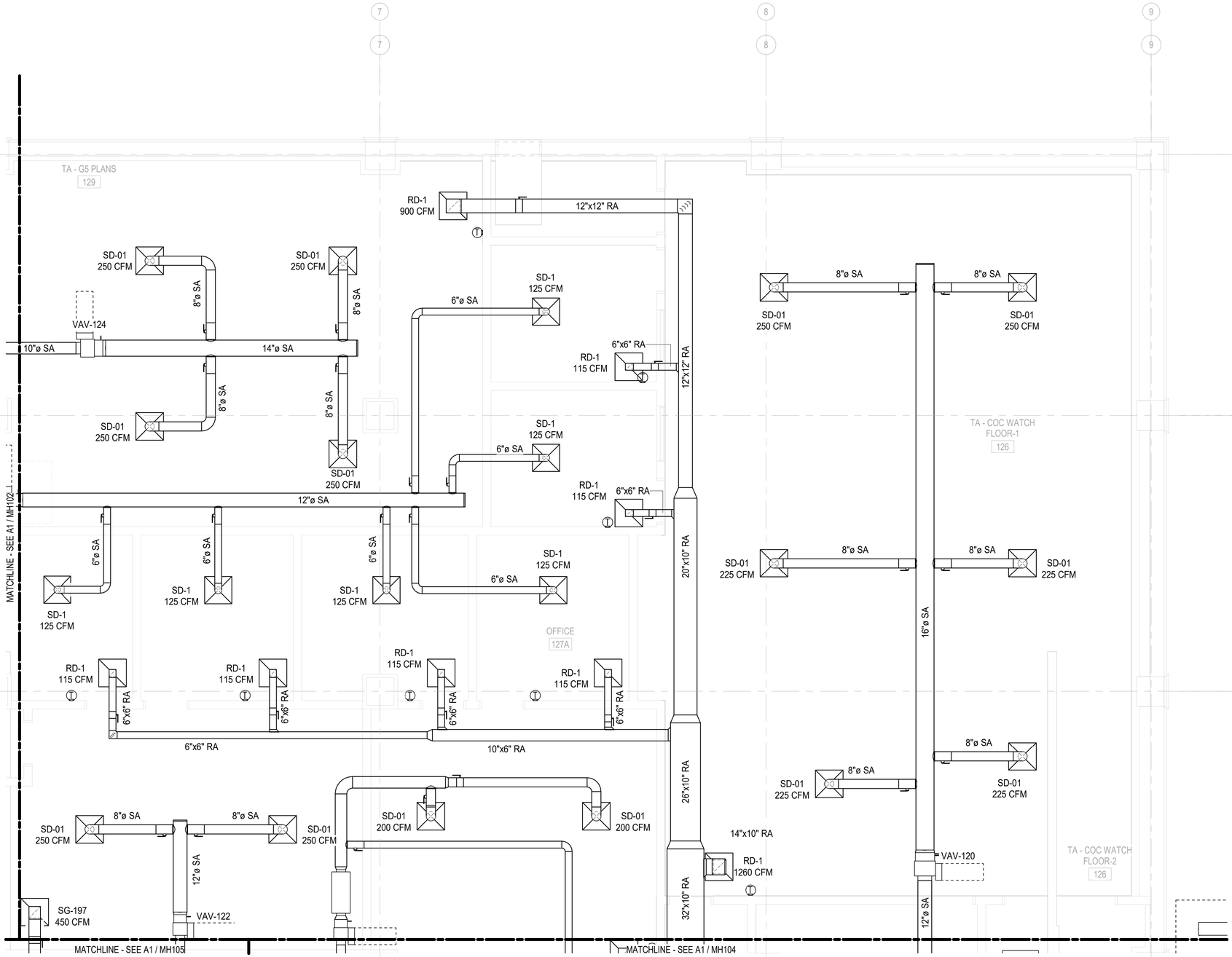

A1 HVAC DUCT PLAN - FIRST FLOOR - AREA 'C'

1/4" = 1'-0"

GENERAL NOTES

1. SEE M-001 FOR GENERAL MECHANICAL NOTES THAT SHALL APPLY TO ALL SHEETS UNLESS NOTED OTHERWISE.
2. MAXIMUM BEND FOR FLEX DUCTS IS 45° AND MAXIMUM LENGTH OF DUCT IS 5'-0".
3. CONTRACTOR SHALL REFER TO MECHANICAL DETAILS AND SPECIFICATIONS FOR ADDITIONAL INSTALLATION REQUIREMENTS.

KEY NOTES

ROOM LEGEND - FIRST FLOOR AREA 'C'

NO.	NAME
126-1	TA - COC WATCH FLOOR-1
126-2	TA - COC WATCH FLOOR-2
127A	OFFICE
129	TA - G5 PLANS

KEY PLAN

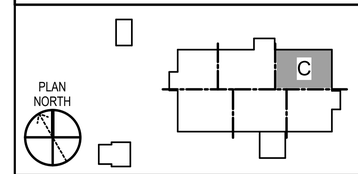

GRAPHIC SCALE(S)

1/4" = 1' - 0" 0 1' 5' 10' 15'

SYM	DESCRIPTION	DATE	APPR

NAVFAC

LICENSED PROFESSIONAL ENGINEER
JITENDRA VALMIK
062-072817
OF ILLINOIS
EXP: 11/30/2027
SIGNED: 03/11/2026

ASMD LLC.
A/E INFO

APPROVED
FOR COMMANDER NAVFAC
ACTIVITY
NATHANIEL PYRON, MILCON PLANNER, DPPH
SATISFACTORY TO DATE 3/10/2026
DES JV DRW AS CHK AP
PMDM DKS/DMK
BRANCH MANAGER KYM
CHIEF ENG/ARCH KYM
FIRE PROTECTION RYO

DEPARTMENT OF THE NAVY
NAVAL FACILITIES ENGINEERING SYSTEMS COMMAND
NAVFAC PACIFIC
U.S. NAVSUPPACT
NAVAL FACILITIES ENGINEERING SYSTEMS COMMAND ~ PACIFIC
MAKALAPA, HAWAII
MCB CAMP BLAZ, GUAM

JFY 2022 PROJECT J-875
BATTLE STAFF TRAINING FACILITY
HVAC DUCT PLAN - FIRST FLOOR - AREA 'C'

SCALE: AS NOTED
EPROJECT NO.: 1696746
CONSTR. CONTR. NO.
NAVFAC DRAWING NO. 17322096
SHEET 256 OF 468
MH103

DRAWFORM REVISION: 25 AUGUST 2020

3/11/2026 4:35:47 PM MH103
C:\REVIT_2024_PROJECT_FILES\BLDG-J-875-1696746-M_7542_Jon_Koenig.rvt

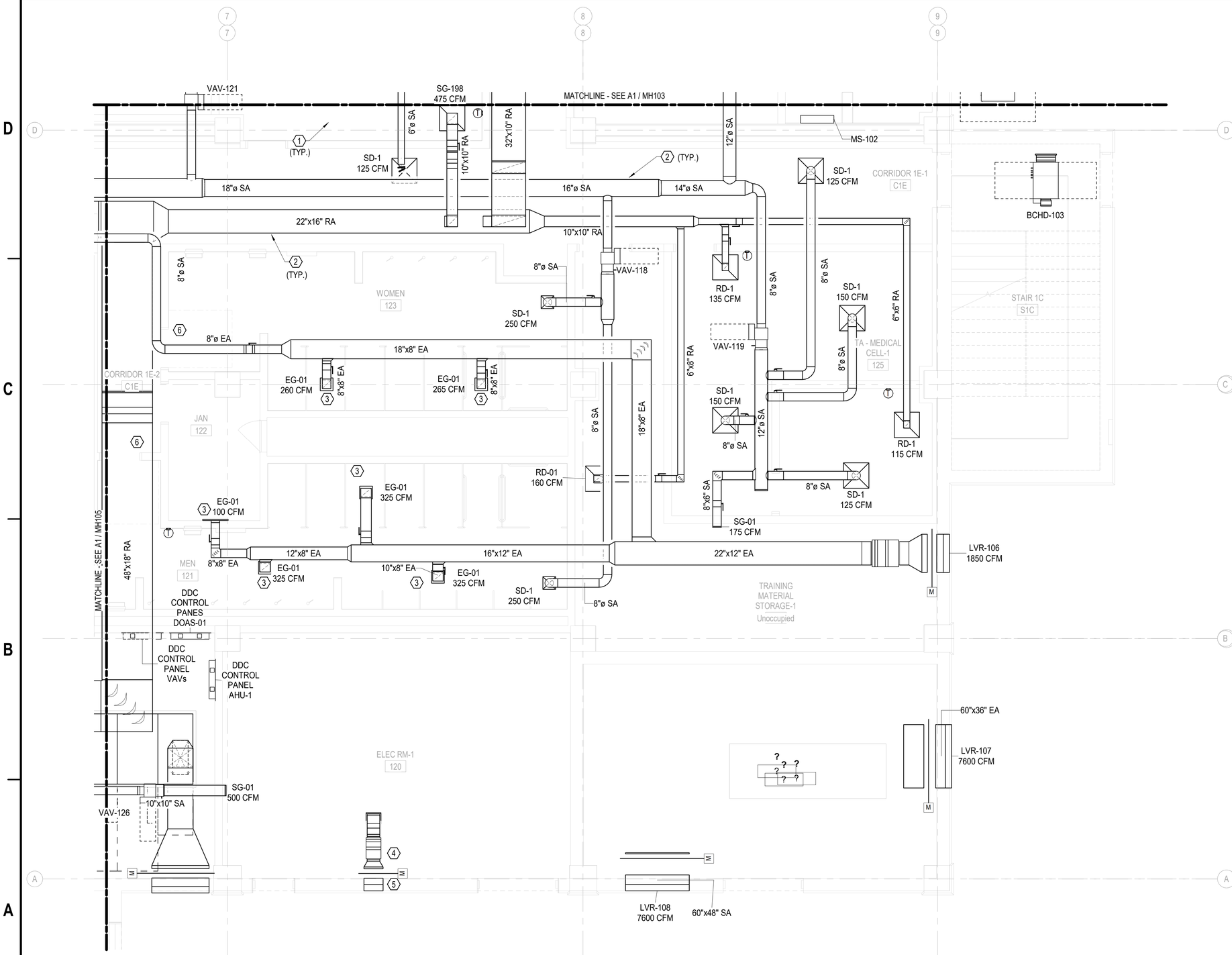

A1 HVAC DUCT PLAN - FIRST FLOOR - AREA 'D'

1/4" = 1'-0"

GENERAL NOTES

1. SEE M-001 FOR GENERAL MECHANICAL NOTES THAT SHALL APPLY TO ALL SHEETS UNLESS NOTED OTHERWISE.
2. MAXIMUM BEND FOR FLEX DUCTS IS 45° AND MAXIMUM LENGTH OF DUCT IS 5'-0".
3. CONTRACTOR SHALL REFER TO MECHANICAL DETAILS AND SPECIFICATIONS FOR ADDITIONAL INSTALLATION REQUIREMENTS.

KEY NOTES

1. PROVIDE NEW VAV BOX AS INDICATED PER SCHEDULE. INSTALL PER MANUFACTURER INSTALLATION INSTRUCTIONS. MAINTAIN RECOMMENDED CLEARANCES FOR SERVICE & MIN. STRAIGHT LENGHT UPSTREAM OF VAV . SEE DETAIL FOR PIPING & INSTALLATION.
2. PROVIDE NEW SUPPLY, RETURN, EXHAUST & TRANSFER DUCTWORK AS INDICATED. INSULATE DUCTWORK PER SPECIFICATIONS. INSTALL PER DETAIL. COORDINATE EXACT ROUTING IN FIELD WITH OTHER TRADES.
3. PROVIDE MANUAL BALANCING DAMPER IN EXHUAST GRILLES FACE WHERE LOCATED IN GYP CEILING & NOT ACCESSIBLE.
4. PROVIDE NEW EXHAUST FAN AS INDICATED PER SCHEDULE. INSTALL PER MANUFACTURER INSTALLATION INSTRUCTIONS. MAINTAIN RECOMMENDED CLEARANCES FOR SERVICE.
5. PROVIDE NEW WALL LOUVER AS INDICATED PER SCHEDULE. COORDINATE EXACT SIZE & LOCATION IN FIELD WITH ARCHITECTURAL & STRUCTURAL.
6. PROVIDE 24" X 12" DOOR TRANSFER GRILLS FOR ALL RESTROOM DOORS.

KEY PLAN

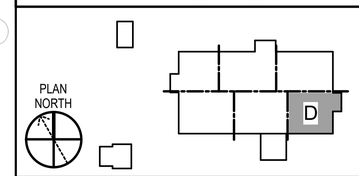

GRAPHIC SCALE(S)

1/4" = 1' - 0" 0 1' 5' 10' 15'

SYM	DESCRIPTION	DATE	APPR

NAVFAC

LICENSED PROFESSIONAL ENGINEER
JITENDRA VALMIK
062-072817
OF ILLINOIS
EXP: 11/30/2027
SIGNED: 03/11/2026

ASMD LLC.
A/E INFO

APPROVED
FOR COMMANDER NAVFAC
ACTIVITY
NATHANIEL PYRON, MILCON PLANNER, DPPH
SATISFACTORY TO DATE 3/10/2026
DES JV | DRW AS | CHK AP
PM/DM DKS/DMK
BRANCH MANAGER KYM
CHIEF ENG/ARCH KYM
FIRE PROTECTION RYO

NAVAL FACILITIES ENGINEERING SYSTEMS COMMAND
MAKALAPA, HAWAII
MCB CAMP BLAZ, GUAM
JFY 2022 PROJECT J-875
BATTLE STAFF TRAINING FACILITY
HVAC DUCT PLAN - FIRST FLOOR - AREA 'D'

DEPARTMENT OF THE NAVY
NAVAL FACILITIES ENGINEERING SYSTEMS COMMAND ~ PACIFIC
NAVFAC PACIFIC
U.S. NAVSUPPACT

SCALE: AS NOTED
EPROJECT NO.: 1696746
CONSTR. CONTR. NO.
NAVFAC DRAWING NO.
17322097
SHEET 257 OF 468
MH104

DRAWFORM REVISION: 25 AUGUST 2020

3/11/2026 4:33:51 PM MH104
C:\REVIT_2024_PROJECT_FILES\BLDG-J-875-1696746-M_7542_Jon_Koenig.rvt

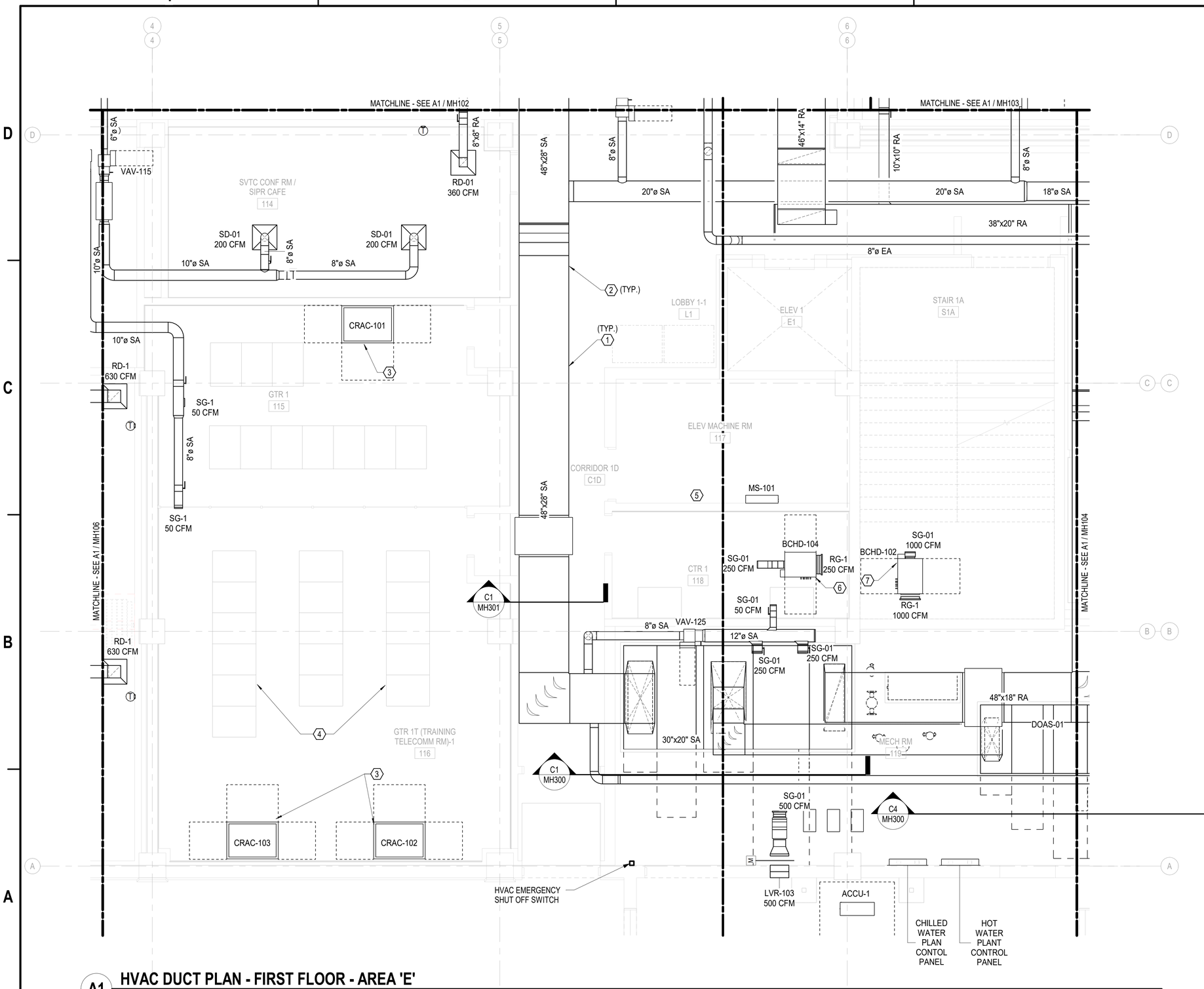

A1 HVAC DUCT PLAN - FIRST FLOOR - AREA 'E'

1/4" = 1'-0"

GENERAL NOTES

1. SEE M-001 FOR GENERAL MECHANICAL NOTES THAT SHALL APPLY TO ALL SHEETS UNLESS NOTED OTHERWISE.
2. MAXIMUM BEND FOR FLEX DUCTS IS 45° AND MAXIMUM LENGTH OF DUCT IS 5'-0".
3. CONTRACTOR SHALL REFER TO MECHANICAL DETAILS AND SPECIFICATIONS FOR ADDITIONAL INSTALLATION REQUIREMENTS.

KEY NOTES

1. PROVIDE NEW VAV BOX AS INDICATED PER SCHEDULE. INSTALL PER MANUFACTURER INSTALLATION INSTRUCTIONS. MAINTAIN RECOMMENDED CLEARANCES FOR SERVICE & MIN. STRAIGHT LENGHT UPSTREAM OF VAV . SEE DETAIL FOR PIPING & INSTALLATION.
2. PROVIDE NEW SUPPLY, RETURN, EXHAUST & TRANSFER DUCTWORK AS INDICATED. INSULATE DUCTWORK PER SPECIFICATIONS. INSTALL PER DETAIL. COORDINATE EXACT ROUTING IN FIELD WITH OTHER TRADES.
3. PROVIDE NEW CRAC UNIT AS INDICATED PER SCHEDULE FOR RAISED FLOOR APPLICATION. INSTALL PER MANUFACTURER INSTALLATION INSTRUCTIONS. MAINTAIN RECOMMENDED CLEARANCES FOR SERVICE.
4. PROVIDE NEW FLOOR TILE DIFFUSER FOR AIR DISTRIBUTION. COORDINATE EXACT LOCATION WITH SERVER LOCATIONS IN FIELD. (TYP. 10)
5. PROVIDE NEW MINI-SPLIT SYSTEM AS INDICATED PER SCHEDULE INSTALL PER MANUFACTURER INSTALLATION INSTRUCTIONS. MAINTAIN RECOMMENDED CLEARANCES FOR SERVICE.
6. PROVIDE NEW BCHD AS INDICATED PER SCHEDULE INSTALL PER MANUFACTURER INSTALLATION INSTRUCTIONS. MAINTAIN RECOMMENDED CLEARANCES FOR SERVICE.
7. PROVIDE NEW STAINLESS STEEL DRIP PAN WITH LEAK DETECTION SENSOR. PAN TO HAVE MIN. 2" LIP UNDERNEATH BCHD. PAN TO COMPLETELY COVER BCHD & EXTEND MIN. 2" ALL SIDE FROM UNIT EDGE.

KEY PLAN

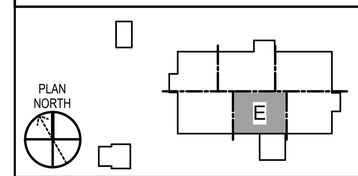

GRAPHIC SCALE(S)

1/4" = 1' - 0" 0 1' 5' 10' 15'

SYM	DESCRIPTION	DATE	APPR

NAVFAC

LICENSED PROFESSIONAL ENGINEER JITENDRA VALMIK 062-072817 STATE OF ILLINOIS
EXP: 11/30/2027
SIGNED: 03/11/2026 BY: A.

ASMD LLC.
A/E INFO

APPROVED
FOR COMMANDER NAVFAC
ACTIVITY
NATHANIEL PYRON, MILCON PLANNER, DPPH
SATISFACTORY TO DATE 3/10/2026

DES	JV	DRW	AS
CHK	AP		
PM/DM	DKS/DMK		
BRANCH MANAGER	KYM		
CHIEF ENG/ARCH	KYM		
FIRE PROTECTION	RYO		

NAVAL FACILITIES ENGINEERING SYSTEMS COMMAND
MAKALAPA, HAWAII
MCB CAMP BLAZ, GUAM
JFY 2022 PROJECT J-875
BATTLE STAFF TRAINING FACILITY
HVAC DUCT PLAN - FIRST FLOOR - AREA 'E'

DEPARTMENT OF THE NAVY
NAVAL FACILITIES ENGINEERING SYSTEMS COMMAND – PACIFIC
NAVFAC PACIFIC
U.S. NAVSUPPACT

SCALE: AS NOTED
EPROJECT NO.: 1696746
CONSTR. CONTR. NO.
NAVFAC DRAWING NO. 17322098
SHEET 258 OF 468
MH105

DRAWFORM REVISION: 25 AUGUST 2020

3/11/2026 4:35:56 PM MH105
C:\REVIT_2021_PROJECT_FILES\BLDG-J875-1696746-M_7542_Jon_Koenig.rvt

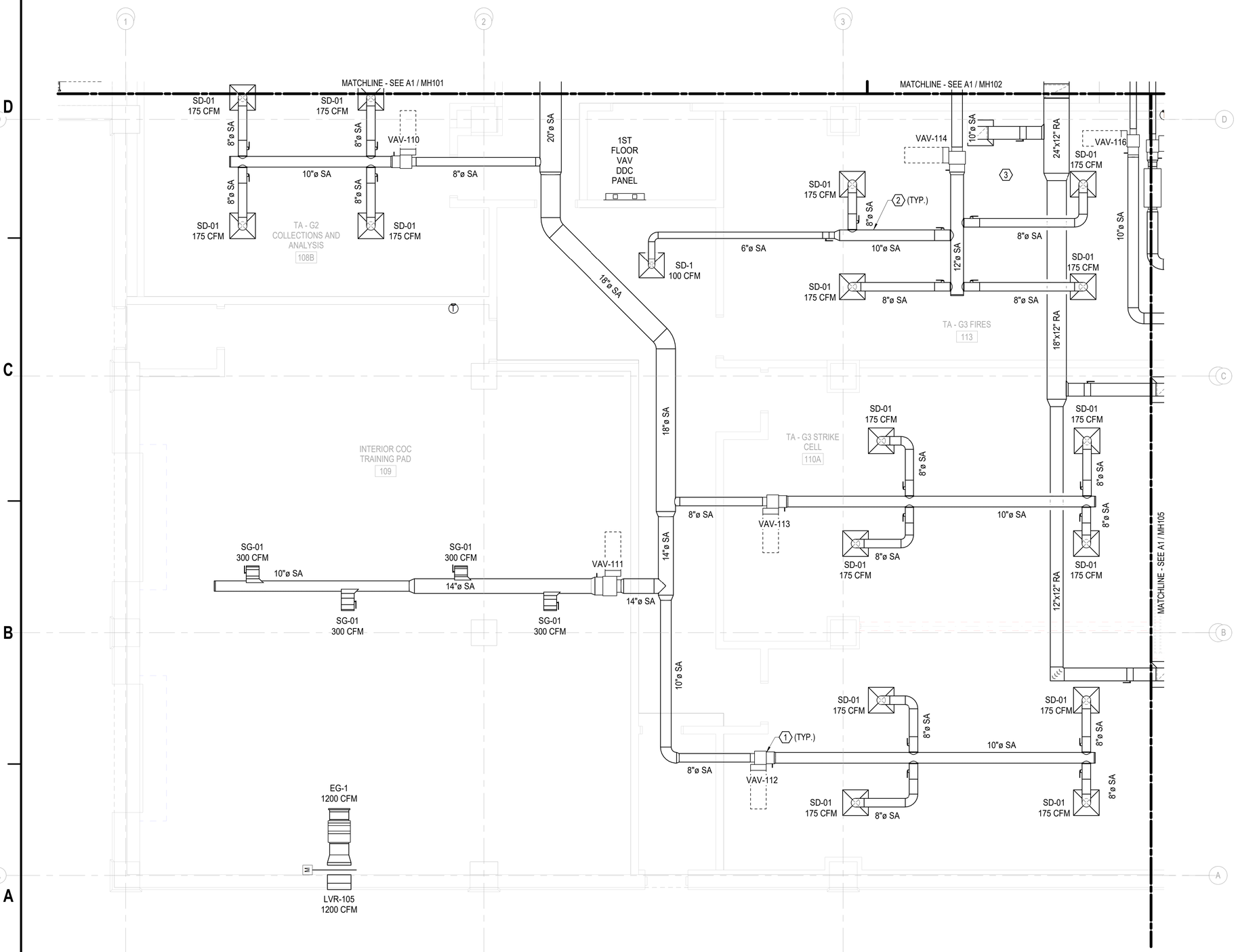

A1 HVAC DUCT PLAN - FIRST FLOOR - AREA 'F'

1/4" = 1'-0"

GENERAL NOTES

1. SEE M-001 FOR GENERAL MECHANICAL NOTES THAT SHALL APPLY TO ALL SHEETS UNLESS NOTED OTHERWISE.
2. MAXIMUM BEND FOR FLEX DUCTS IS 45° AND MAXIMUM LENGTH OF DUCT IS 5'-0".
3. CONTRACTOR SHALL REFER TO MECHANICAL DETAILS AND SPECIFICATIONS FOR ADDITIONAL INSTALLATION REQUIREMENTS.

KEY NOTES

1. PROVIDE NEW VAV BOX AS INDICATED PER SCHEDULE. INSTALL PER MANUFACTURER INSTALLATION INSTRUCTIONS. MAINTAIN RECOMMENDED CLEARANCES FOR SERVICE & MIN. STRAIGHT LENGHT UPSTREAM OF VAV . SEE DETAIL FOR PIPING & INSTALLATION.
2. PROVIDE NEW SUPPLY, RETURN, EXHAUST & TRANSFER DUCTWORK AS INDICATED. INSULATE DUCTWORK PER SPECIFICATIONS. INSTALL PER DETAIL. COORDINATE EXACT ROUTING IN FIELD WITH OTHER TRADES.
3. PROVIDE NEW DUCT SILENCER AS INDICATED PER SCHEDULE. VERIFY EXACT PERFORMACE WITH MANUFACTURER FOR ACTUAL MAKE & MODEL USED.

KEY PLAN

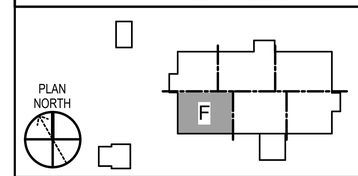

GRAPHIC SCALE(S)

1/4" = 1' - 0" 0 1' 5' 10' 15'

SYM	DESCRIPTION	DATE	APPR

NAVFAC

LICENSED PROFESSIONAL ENGINEER
JITENDRA VALMIK
062-072817
OF ILLINOIS
EXP: 11/30/2027
SIGNED: 03/11/2026

ASMD LLC.
A/E INFO

APPROVED
FOR COMMANDER NAVFAC
ACTIVITY
NATHANIEL PYRON, MILCON PLANNER, DPPH
SATISFACTORY TO DATE 3/10/2026
DES JV DRW AS CHK AP
PMDM DKS/DMK
BRANCH MANAGER KYM
CHIEF ENG/ARCH KYM
FIRE PROTECTION RYO

DEPARTMENT OF THE NAVY
NAVFAC PACIFIC
NAVAL FACILITIES ENGINEERING SYSTEMS COMMAND ~ PACIFIC
NAVAL FACILITIES ENGINEERING SYSTEMS COMMAND
MAKALAPA, HAWAII
U.S. NAVSUPPACT
MCB CAMP BLAZ, GUAM
JFY 2022 PROJECT J-875
BATTLE STAFF TRAINING FACILITY
HVAC DUCT PLAN - FIRST FLOOR - AREA 'F'

SCALE: AS NOTED
EPROJECT NO.: 1696746
CONSTR. CONTR. NO.
NAVFAC DRAWING NO. 17322099
SHEET 259 OF 468
MH106

DRAWFORM REVISION: 25 AUGUST 2020

3/11/2026 4:36:00 PM MH106
C:\REVIT_2024_PROJECT_FILES\BLDG-J-875-1696746-M_75r2_Jon_Koenig.rvt

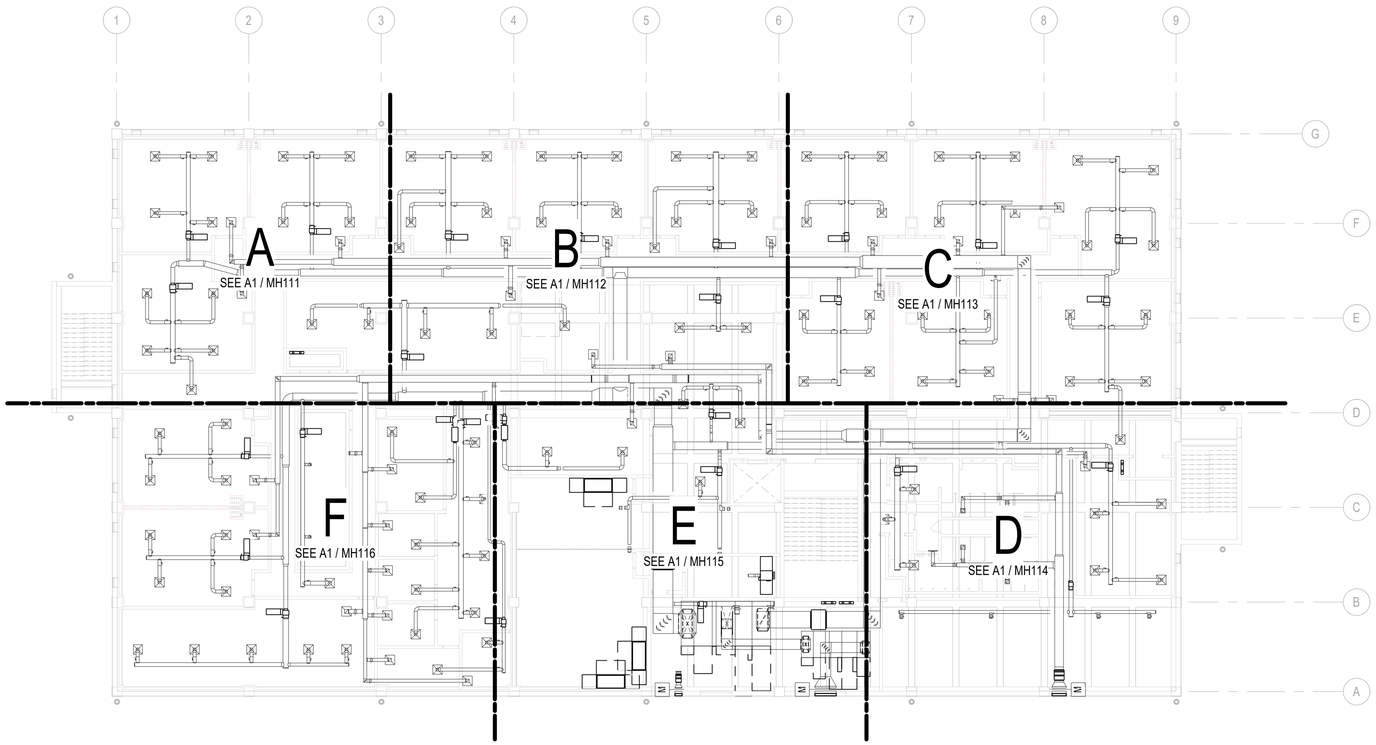

B1 COMPOSITE HVAC DUCT PLAN - SECOND FLOOR

1/16" = 1'-0"

GENERAL NOTES

KEY PLAN

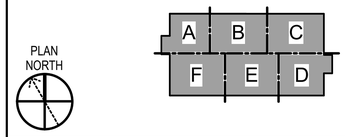

GRAPHIC SCALE(S)

1/16" = 1' - 0" 0 5' 10' 20' 30' 60'

SYM	DESCRIPTION	DATE	APPR

NAVFAC

LICENSED PROFESSIONAL ENGINEER
JITENDRA VALMIK
062-072817
OF ILLINOIS
EXP: 11/30/2027
SIGNED: 03/11/2026 M.A.

ASMD LLC.
A/E INFO

APPROVED
FOR COMMANDER NAVFAC
ACTIVITY
NATHANIEL PYRON, MILCON PLANNER, DPPH
SATISFACTORY TO DATE 3/10/2026
DES JV | DRW AS | CHK AP
PMDM DKS/DMK
BRANCH MANAGER KYM
CHIEF ENG/ARCH KYM
FIRE PROTECTION RYO

DEPARTMENT OF THE NAVY
NAVFAC PACIFIC
U.S. NAVSUPPACT
NAVAL FACILITIES ENGINEERING SYSTEMS COMMAND
NAVAL FACILITIES ENGINEERING SYSTEMS COMMAND ~ PACIFIC
MAKALAPA, HAWAII
MCB CAMP BLAZ, GUAM
JFY 2022 PROJECT J-875
BATTLE STAFF TRAINING FACILITY
COMPOSITE HVAC DUCT PLAN - SECOND FLOOR

SCALE: AS NOTED
EPROJECT NO.: 1696746
CONSTR. CONTR. NO.
NAVFAC DRAWING NO. 17322100
SHEET 260 OF 468
MH110

DRAWFORM REVISION: 25 AUGUST 2020

3/11/2026 4:36:05 PM MH110
C:\REVIT_2024_PROJECT_FILES\BLDG-J875-1696746-M_75\42_Jon_Koenig.rvt

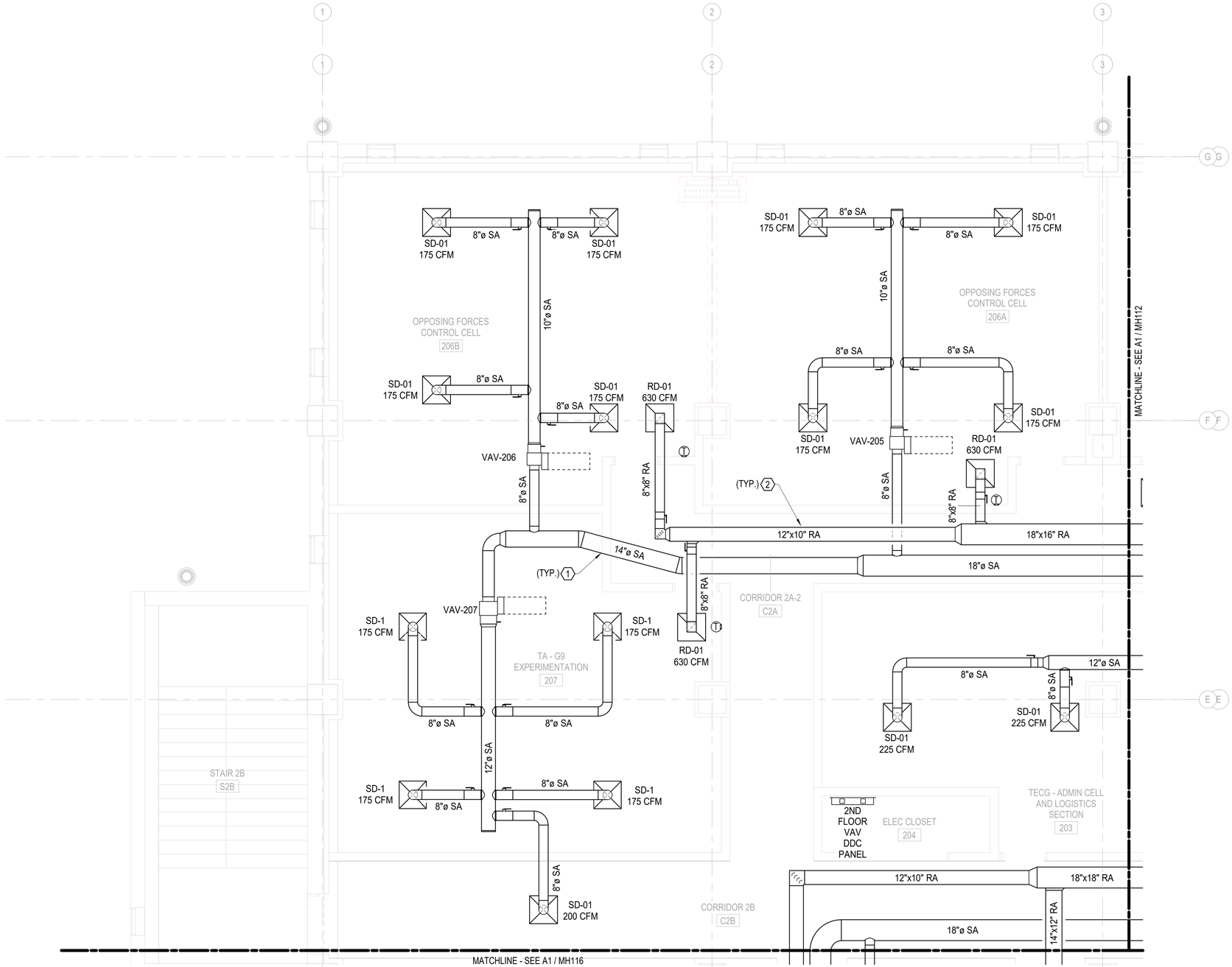

A1 HVAC DUCT PLAN - SECOND FLOOR - AREA 'A'

1/4" = 1'-0"

GENERAL NOTES

1. SEE M-001 FOR GENERAL MECHANICAL NOTES THAT SHALL APPLY TO ALL SHEETS UNLESS NOTED OTHERWISE.
2. MAXIMUM BEND FOR FLEX DUCTS IS 45° AND MAXIMUM LENGTH OF DUCT IS 5'-0".
3. CONTRACTOR SHALL REFER TO MECHANICAL DETAILS AND SPECIFICATIONS FOR ADDITIONAL INSTALLATION REQUIREMENTS.

KEY NOTES

1. PROVIDE NEW VAV BOX AS INDICATED PER SCHEDULE. INSTALL PER MANUFACTURER INSTALLATION INSTRUCTIONS. MAINTAIN RECOMMENDED CLEARANCES FOR SERVICE & MIN. STRAIGHT LENGHT UPSTREAM OF VAV . SEE DETAIL FOR PIPING & INSTALLATION.
2. PROVIDE NEW SUPPLY, RETURN, EXHAUST & TRANSFER DUCTWORK AS INDICATED. INSULATE DUCTWORK PER SPECIFICATIONS. INSTALL PER DETAIL. COORDINATE EXACT ROUTING IN FIELD WITH OTHER TRADES.

KEY PLAN

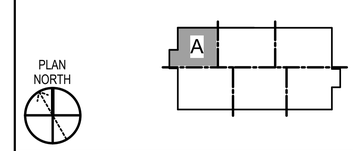

GRAPHIC SCALE(S)

1/4" = 1' - 0" 0 1' 5' 10' 15'

SYM	DESCRIPTION	DATE	APPR

LICENSED PROFESSIONAL ENGINEER JITENDRA VALMIK 062-072817 OF ILLINOIS
EXP: 11/30/2027
SIGNED: 03/11/2026

APPROVED
FOR COMMANDER NAVFAC
ACTIVITY
NATHANIEL PYRON, MILCON PLANNER, DPPH
SATISFACTORY TO DATE 3/10/2026
DES JV DRW AS CHK AP
PM/DM DKS/DMK
BRANCH MANAGER KYM
CHIEF ENG/ARCH KYM
FIRE PROTECTION RYO

DEPARTMENT OF THE NAVY
NAVFAC PACIFIC
U.S. NAVSUPPACT
NAVAL FACILITIES ENGINEERING SYSTEMS COMMAND
NAVAL FACILITIES ENGINEERING SYSTEMS COMMAND ~ PACIFIC
MAKALAPA, HAWAII
MCB CAMP BLAZ, GUAM
JFY 2022 PROJECT J-875
BATTLE STAFF TRAINING FACILITY
HVAC DUCT PLAN - SECOND FLOOR - AREA 'A'

SCALE: AS NOTED
EPROJECT NO.: 1696746
CONSTR. CONTR. NO.
NAVFAC DRAWING NO. 17322101
SHEET 261 OF 468
MH111

DRAWFORM REVISION: 25 AUGUST 2020

3/11/2026 4:36:09 PM MH111
C:\REVIT_2024_PROJECT_FILES\BLDG-J-875-1696746-M_7542_Jon_Koenig.rvt

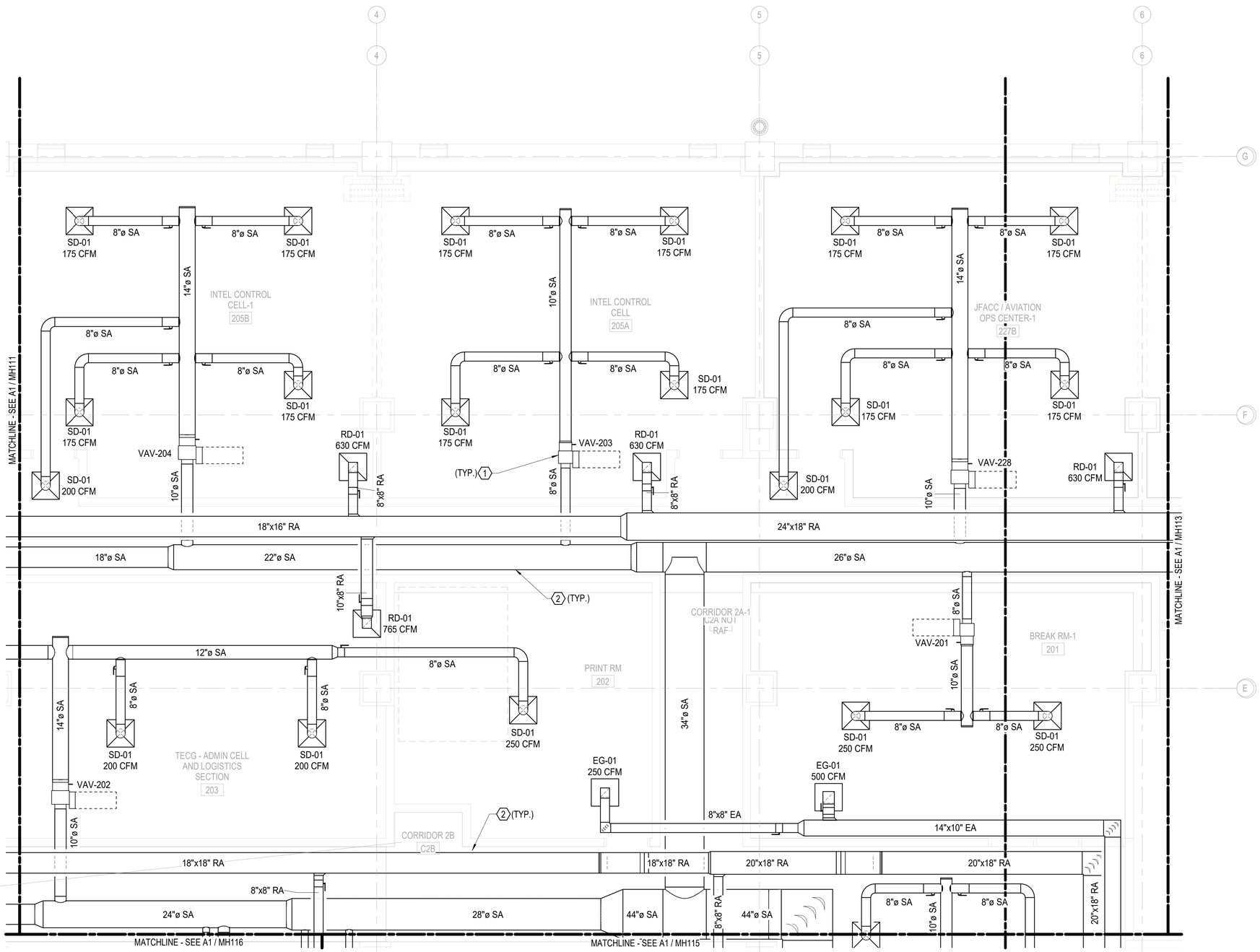

A1 HVAC DUCT PLAN - SECOND FLOOR - AREA 'B'

1/4" = 1'-0"

GENERAL NOTES

1. SEE M-001 FOR GENERAL MECHANICAL NOTES THAT SHALL APPLY TO ALL SHEETS UNLESS NOTED OTHERWISE.
2. MAXIMUM BEND FOR FLEX DUCTS IS 45° AND MAXIMUM LENGTH OF DUCT IS 5'-0".
3. CONTRACTOR SHALL REFER TO MECHANICAL DETAILS AND SPECIFICATIONS FOR ADDITIONAL INSTALLATION REQUIREMENTS.

KEY NOTES

1. PROVIDE NEW VAV BOX AS INDICATED PER SCHEDULE. INSTALL PER MANUFACTURER INSTALLATION INSTRUCTIONS. MAINTAIN RECOMMENDED CLEARANCES FOR SERVICE & MIN. STRAIGHT LENGHT UPSTREAM OF VAV . SEE DETAIL FOR PIPING & INSTALLATION.
2. PROVIDE NEW SUPPLY, RETURN, EXHAUST & TRANSFER DUCTWORK AS INDICATED. INSULATE DUCTWORK PER SPECIFICATIONS. INSTALL PER DETAIL. COORDINATE EXACT ROUTING IN FIELD WITH OTHER TRADES.
3. PROVIDE NEW DUCT SILENCER AS INDICATED PER SCHEDULE. VERIFY EXACT PERFORMACE WITH MANUFACTURER FOR ACTUAL MAKE & MODEL USED.

KEY PLAN

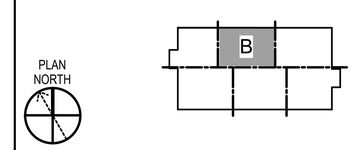

GRAPHIC SCALE(S)

1/4" = 1' - 0" 0 1' 5' 10' 15'

SYM	DESCRIPTION	DATE	APPR

NAVFAC

LICENSED PROFESSIONAL ENGINEER JITENDRA VALMIK 062-072817 STATE OF ILLINOIS
EXP: 11/30/2027
SIGNED: 03/11/2026

ASMD LLC. AE INFO

APPROVED
FOR COMMANDER NAVFAC
ACTIVITY
NATHANIEL PYRON, MILCON PLANNER, DPPH
SATISFACTORY TO DATE 3/10/2026
DES JV DRW AS CHK AP
PM/DM DKS/DMK
BRANCH MANAGER KYM
CHIEF ENG/ARCH KYM
FIRE PROTECTION RYO

DEPARTMENT OF THE NAVY
NAVFAC PACIFIC
NAVAL FACILITIES ENGINEERING SYSTEMS COMMAND – PACIFIC
MAKALAPA, HAWAII
U.S. NAVSUPPACT
MCB CAMP BLAZ, GUAM
NAVAL FACILITIES ENGINEERING SYSTEMS COMMAND
JFY 2022 PROJECT J-875
BATTLE STAFF TRAINING FACILITY
HVAC DUCT PLAN - SECOND FLOOR - AREA 'B'

SCALE: AS NOTED
EPROJECT NO.: 1696746
CONSTR. CONTR. NO.
NAVFAC DRAWING NO. 17322102
SHEET 262 OF 468
MH112

DRAWFORM REVISION: 25 AUGUST 2020

3/11/2026 4:36:13 PM MH112
C:\REVIT_2024_PROJECT_FILES\BLDG-J875-1696746-M_7542_Jon_Koenig.rvt

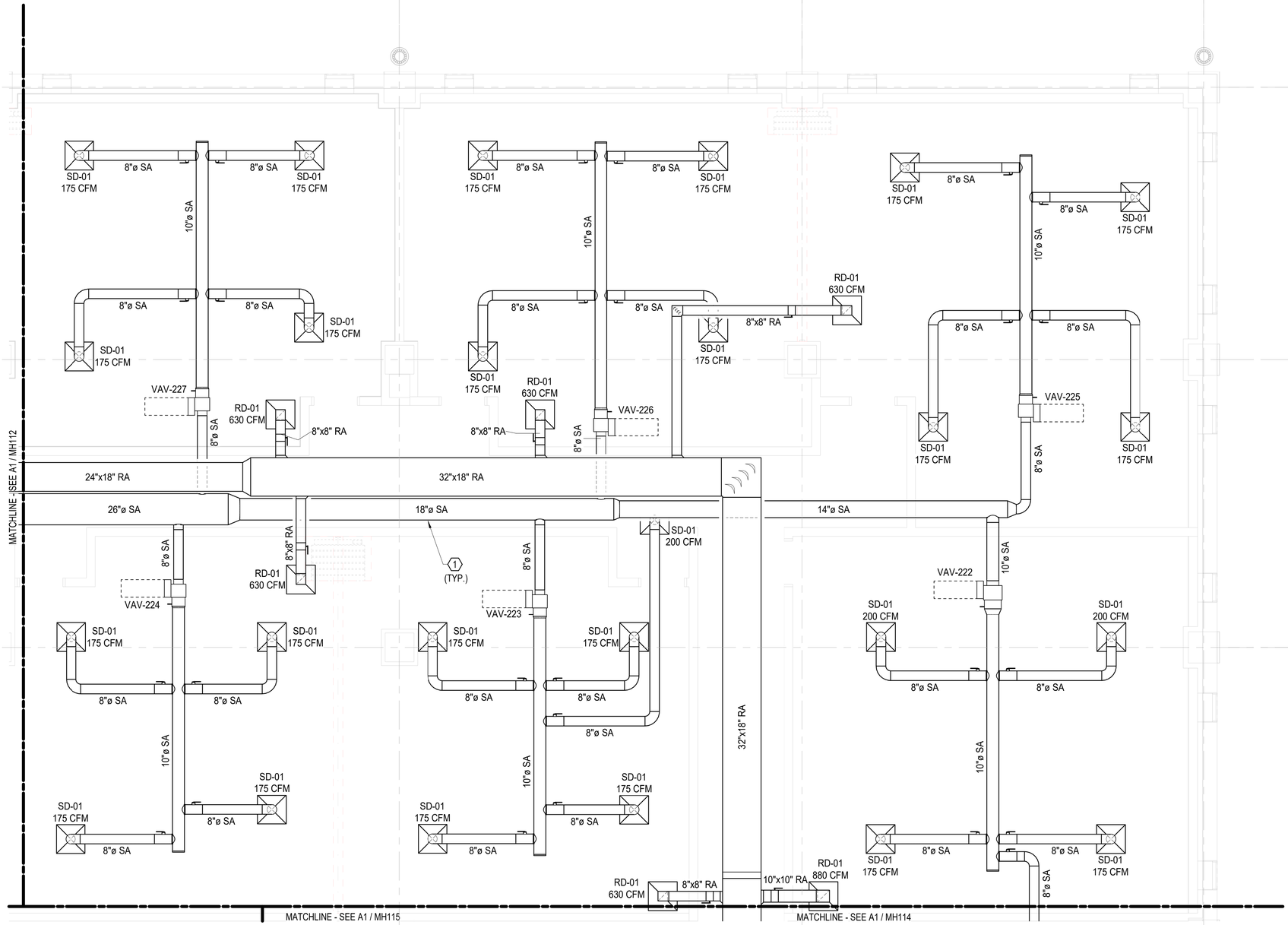

A1 HVAC DUCT PLAN - SECOND FLOOR - AREA 'C'

1/4" = 1'-0"

GENERAL NOTES

1. SEE M-001 FOR GENERAL MECHANICAL NOTES THAT SHALL APPLY TO ALL SHEETS UNLESS NOTED OTHERWISE.
2. MAXIMUM BEND FOR FLEX DUCTS IS 45° AND MAXIMUM LENGTH OF DUCT IS 5'-0".
3. CONTRACTOR SHALL REFER TO MECHANICAL DETAILS AND SPECIFICATIONS FOR ADDITIONAL INSTALLATION REQUIREMENTS.

KEY NOTES

1. PROVIDE NEW SUPPLY, RETURN, EXHAUST & TRANSFER DUCTWORK AS INDICATED. INSULATE DUCTWORK PER SPECIFICATIONS. INSTALL PER DETAIL. COORDINATE EXACT ROUTING IN FIELD WITH OTHER TRADES.

KEY PLAN

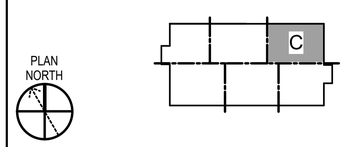

GRAPHIC SCALE(S)

1/4" = 1' - 0" 0 1' 5' 10' 15'

SYM	DESCRIPTION	DATE	APPR

NAVFAC

LICENSED PROFESSIONAL ENGINEER
JITENDRA VALMIK
062-072817
OF ILLINOIS
EXP: 11/30/2027
SIGNED: 03/11/2026

ASMD LLC.
A/E INFO

APPROVED
FOR COMMANDER NAVFAC
ACTIVITY: NATHANIEL PYRON, MILCON PLANNER, DPPH
SATISFACTORY TO DATE: 3/10/2026
DES: JV | DRW: AS | CHK: AP
PMDM: DKS/DMK
BRANCH MANAGER: KYM
CHIEF ENG/ARCH: KYM
FIRE PROTECTION: RYO

DEPARTMENT OF THE NAVY
NAVAL FACILITIES ENGINEERING SYSTEMS COMMAND ~ PACIFIC
NAVFAC PACIFIC
U.S. NAVSUPPACT
NAVAL FACILITIES ENGINEERING SYSTEMS COMMAND
MAKALAPA, HAWAII
MCB CAMP BLAZ, GUAM
JFY 2022 PROJECT J-875
BATTLE STAFF TRAINING FACILITY
HVAC DUCT PLAN - SECOND FLOOR - AREA 'C'

SCALE: AS NOTED
EPROJECT NO.: 1696746
CONSTR. CONTR. NO.
NAVFAC DRAWING NO. 17322103
SHEET 263 OF 468
MH113

DRAWFORM REVISION: 25 AUGUST 2020

3/11/2026 4:39:17 PM MH113
C:\REVIT_2024_PROJECT_FILES\BLDG-J875-1696746-M_7542_Jon_Koenig.rvt

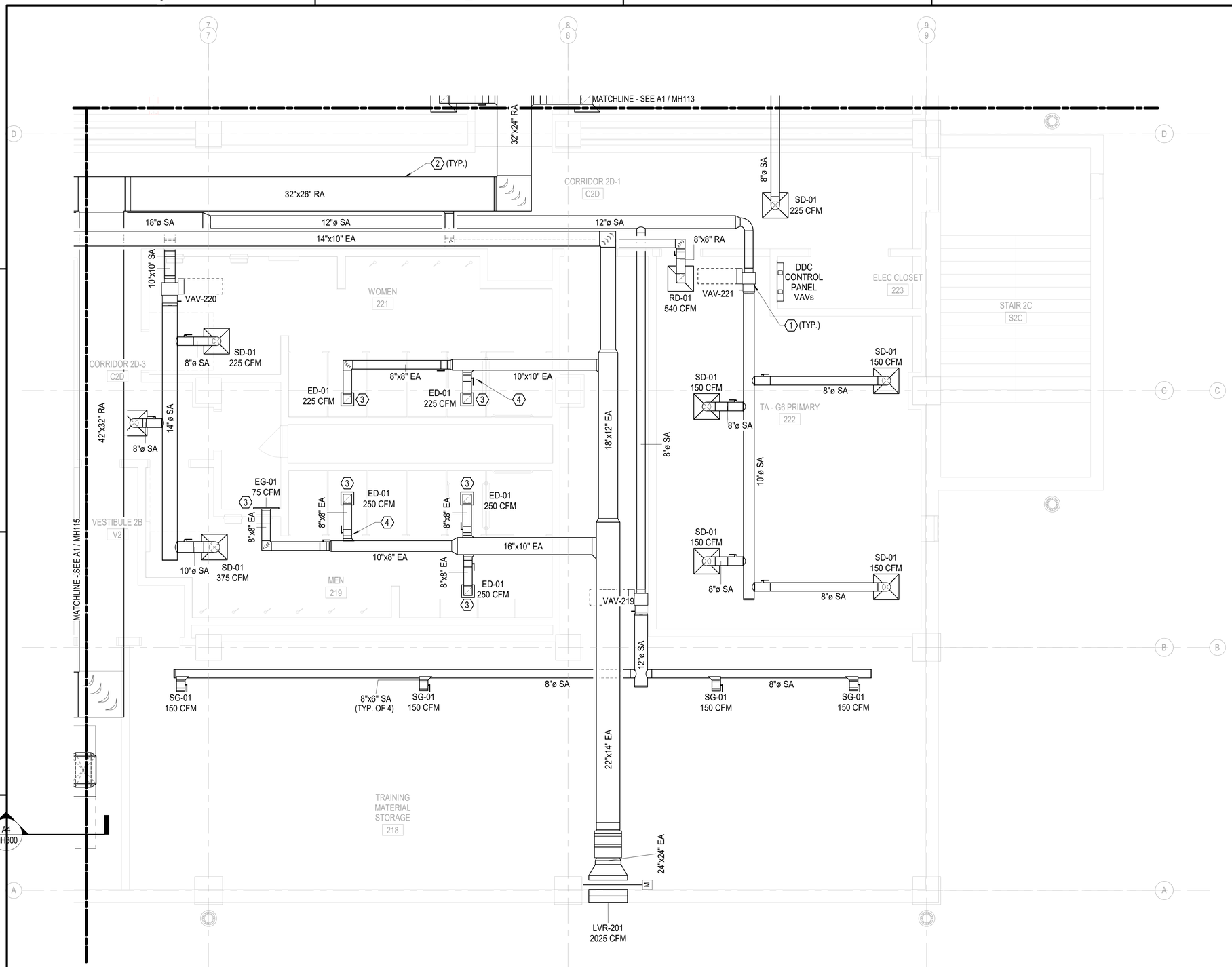

A1 HVAC DUCT PLAN - SECOND FLOOR - AREA 'D'

1/4" = 1'-0"

GENERAL NOTES

1. SEE M-001 FOR GENERAL MECHANICAL NOTES THAT SHALL APPLY TO ALL SHEETS UNLESS NOTED OTHERWISE.
2. MAXIMUM BEND FOR FLEX DUCTS IS 45° AND MAXIMUM LENGTH OF DUCT IS 5'-0".
3. CONTRACTOR SHALL REFER TO MECHANICAL DETAILS AND SPECIFICATIONS FOR ADDITIONAL INSTALLATION REQUIREMENTS.

KEY NOTES

1. PROVIDE NEW VAV BOX AS INDICATED PER SCHEDULE. INSTALL PER MANUFACTURER INSTALLATION INSTRUCTIONS. MAINTAIN RECOMMENDED CLEARANCES FOR SERVICE & MIN. STRAIGHT LENGHT UPSTREAM OF VAV . SEE DETAIL FOR PIPING & INSTALLATION.
2. PROVIDE NEW SUPPLY, RETURN, EXHAUST & TRANSFER DUCTWORK AS INDICATED. INSULATE DUCTWORK PER SPECIFICATIONS. INSTALL PER DETAIL. COORDINATE EXACT ROUTING IN FIELD WITH OTHER TRADES.
3. PROVIDE MANUAL BALANCING DAMPER IN EXHUAST GRILLES FACE WHERE LOCATED IN GYM CEILING & NOT ACCESSIBLE.
4. COORDINATE LOCATION OF ACCESS PANELS WITH ARCHITECTURAL FOR ACCESS TO MANUAL VOLUME DAMPER FOR BALANCING.

KEY PLAN

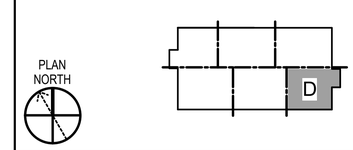

GRAPHIC SCALE(S)

1/4" = 1' - 0" 0 1' 5' 10' 15'

SYM	DESCRIPTION	DATE	APPR

NAVFAC

LICENSED PROFESSIONAL ENGINEER
JITENDRA VALMIK
062-072817
STATE OF ILLINOIS
EXP: 11/30/2027
SIGNED: 03/11/2026

ASMD LLC.
A/E INFO

APPROVED
FOR COMMANDER NAVFAC
ACTIVITY
NATHANIEL PYRON, MILCON PLANNER, DPPH
SATISFACTORY TO DATE 3/10/2026
DES JV DRW AS CHK AP
PM/DM DKS/DMK
BRANCH MANAGER KYM
CHIEF ENG/ARCH KYM
FIRE PROTECTION RYO

DEPARTMENT OF THE NAVY
NAVFAC PACIFIC
U.S. NAVSUPPACT
NAVAL FACILITIES ENGINEERING SYSTEMS COMMAND
NAVAL FACILITIES ENGINEERING SYSTEMS COMMAND – PACIFIC
MAKALAPA, HAWAII
MCB CAMP BLAZ, GUAM
JFY 2022 PROJECT J-875
BATTLE STAFF TRAINING FACILITY
HVAC DUCT PLAN - SECOND FLOOR - AREA 'D'

SCALE: AS NOTED
EPROJECT NO.: 1696746
CONSTR. CONTR. NO.
NAVFAC DRAWING NO. 17322104
SHEET 264 OF 468
MH114

DRAWFORM REVISION: 25 AUGUST 2020

3/11/2026 4:36:22 PM
C:\REVIT_2024_PROJECT_FILES\BLDG-J875-1696746-M_7542_Jon_Koenig.rvt
MH114

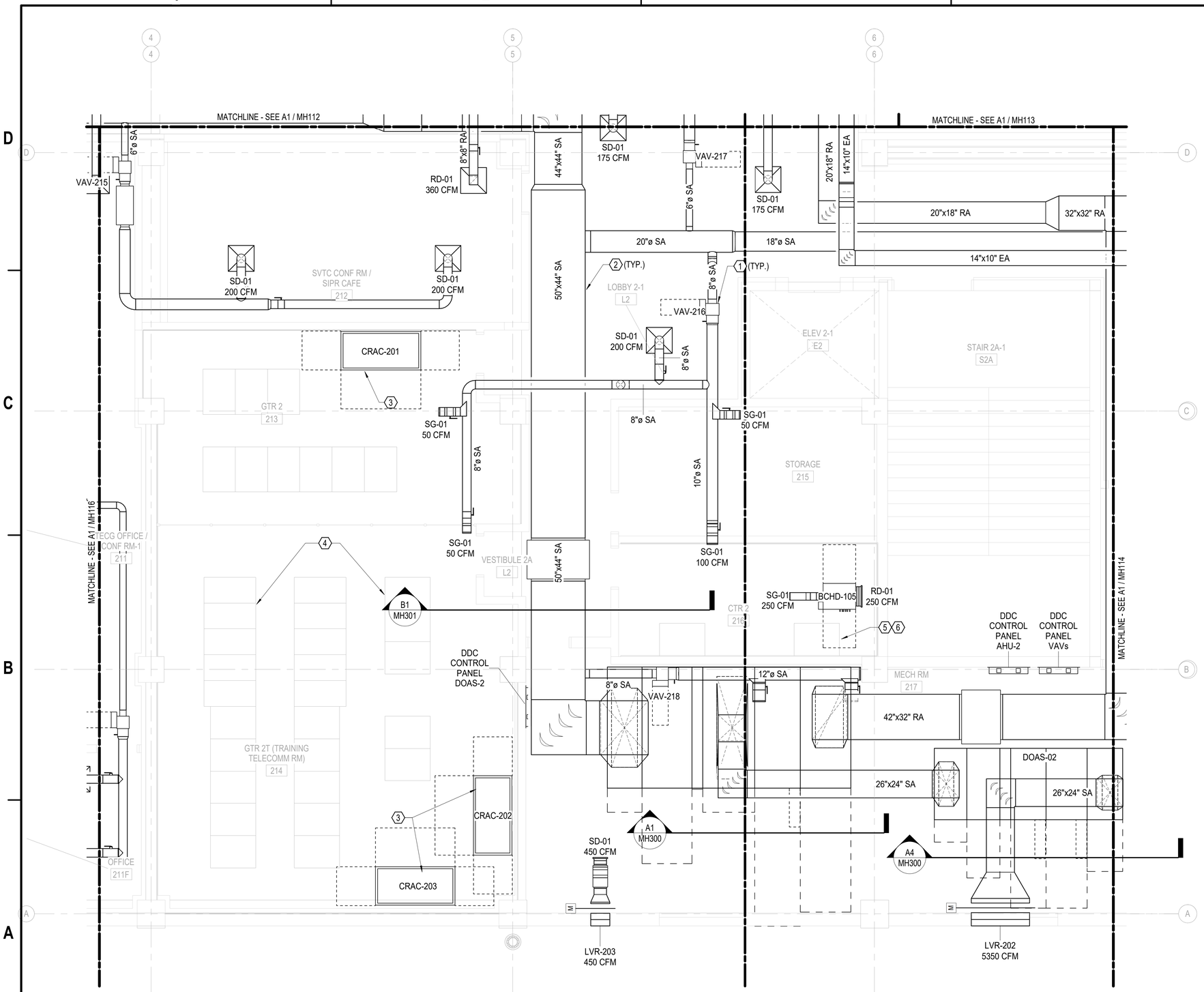

A1 HVAC DUCT PLAN - SECOND FLOOR - AREA 'E'

1/4" = 1'-0"

GENERAL NOTES

1. SEE M-001 FOR GENERAL MECHANICAL NOTES THAT SHALL APPLY TO ALL SHEETS UNLESS NOTED OTHERWISE.
2. MAXIMUM BEND FOR FLEX DUCTS IS 45° AND MAXIMUM LENGTH OF DUCT IS 5'-0".
3. CONTRACTOR SHALL REFER TO MECHANICAL DETAILS AND SPECIFICATIONS FOR ADDITIONAL INSTALLATION REQUIREMENTS.

KEY NOTES

1. PROVIDE NEW VAV BOX AS INDICATED PER SCHEDULE. INSTALL PER MANUFACTURER INSTALLATION INSTRUCTIONS. MAINTAIN RECOMMENDED CLEARANCES FOR SERVICE & MIN. STRAIGHT LENGHT UPSTREAM OF VAV . SEE DETAIL FOR PIPING & INSTALLATION.
2. PROVIDE NEW SUPPLY, RETURN, EXHAUST & TRANSFER DUCTWORK AS INDICATED. INSULATE DUCTWORK PER SPECIFICATIONS. INSTALL PER DETAIL. COORDINATE EXACT ROUTING IN FIELD WITH OTHER TRADES.
3. PROVIDE NEW CRAC UNIT AS INDICATED PER SCHEDULE FOR RAISED FLOOR APPLICATION. INSTALL PER MANUFACTURER INSTALLATION INSTRUCTIONS. MAINTAIN RECOMMENDED CLEARANCES FOR SERVICE.
4. PROVIDE NEW FLOOR TILE DIFFUSER FOR AIR DISTRIBUTION. COORDINATE EXACT LOCATION WITH SERVER LOCATIONS IN FIELD. (TYP. 10)
5. PROVIDE NEW BCHD AS INDICATED PER SCHEDULE INSTALL PER MANUFACTURER INSTALLATION INSTRUCTIONS. MAINTAIN RECOMMENDED CLEARANCES FOR SERVICE.
6. PROVIDE NEW STAINLESS STEEL DRIP PAN WITH LEAK DETECTION SENSOR. PAN TO HAVE MIN. 2" LIP UNDERNEATH BCHD. PAN TO COMPLETELY COVER BCHD & EXTEND MIN. 2" ALL SIDE FROM UNIT EDGE.

KEY PLAN

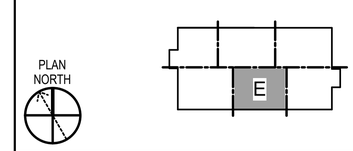

GRAPHIC SCALE(S)

1/4" = 1' - 0" 0 1' 5' 10' 15'

SYM	DESCRIPTION	DATE	APPR

LICENSED PROFESSIONAL ENGINEER
JITENDRA VALMIK
062-072817
OF ILLINOIS
EXP: 11/30/2027
SIGNED: 03/11/2026

APPROVED
FOR COMMANDER NAVFAC
ACTIVITY
NATHANIEL PYRON, MILCON PLANNER, DPPH
SATISFACTORY TO DATE 3/10/2026
DES JV | DRW AS | CHK AP
PM/DM DKS/DMK
BRANCH MANAGER KYM
CHIEF ENG/ARCH KYM
FIRE PROTECTION RYO

DEPARTMENT OF THE NAVY
NAVAL FACILITIES ENGINEERING SYSTEMS COMMAND
NAVFAC PACIFIC
U.S. NAVSUPPACT
NAVAL FACILITIES ENGINEERING SYSTEMS COMMAND ~ PACIFIC
MAKALAPA, HAWAII
MCB CAMP BLAZ, GUAM
JFY 2022 PROJECT J-875
BATTLE STAFF TRAINING FACILITY
HVAC DUCT PLAN - SECOND FLOOR - AREA 'E'

SCALE: AS NOTED
EPROJECT NO.: 1696746
CONSTR. CONTR. NO.
NAVFAC DRAWING NO. 17322105
SHEET 265 OF 468
MH115

DRAWFORM REVISION: 25 AUGUST 2020

3/11/2026 4:36:26 PM
C:\REVIT_2024_PROJECT_FILES\BLDG-J-875-1696746-M_7542_Jon_Koenig.rvt
MH115

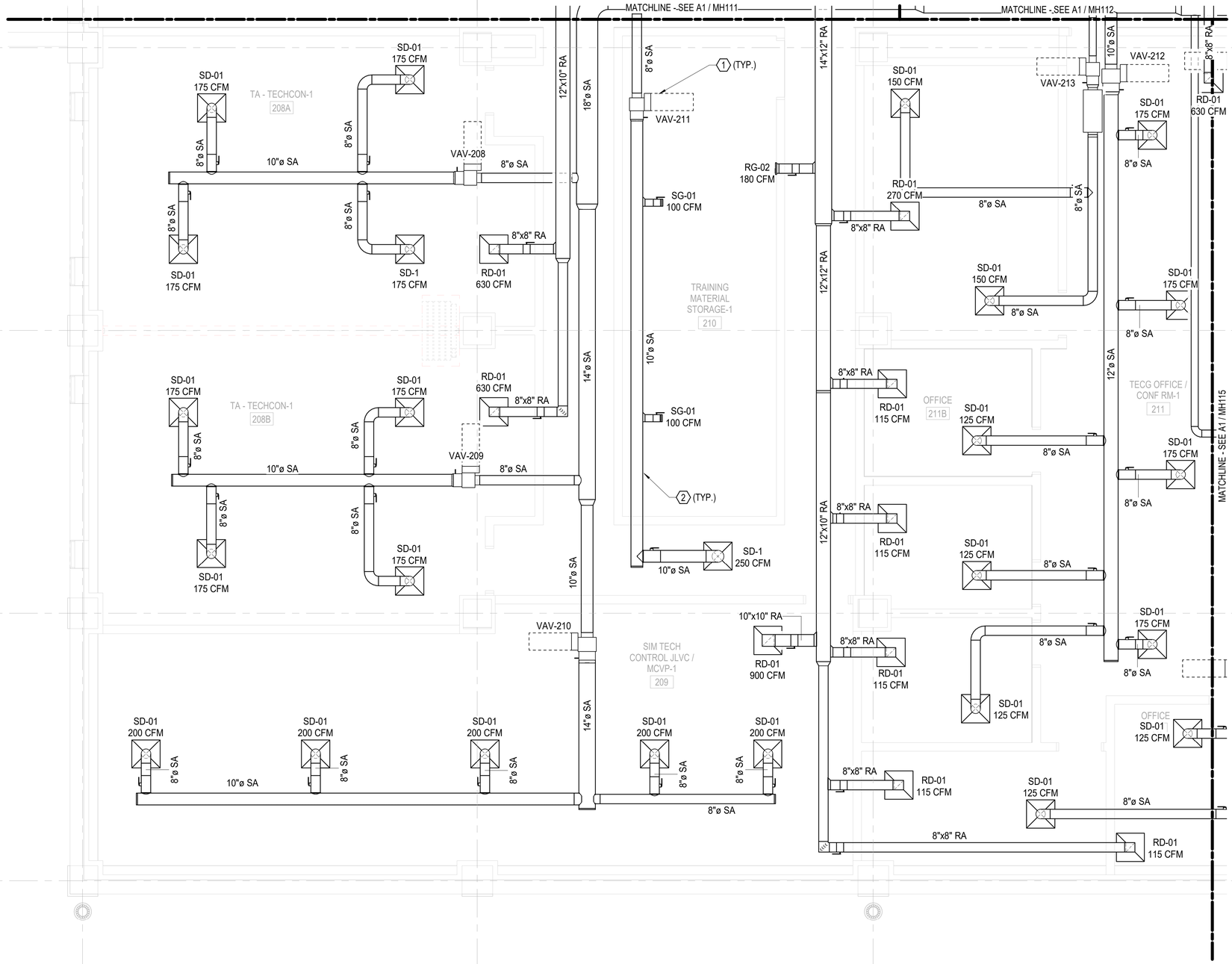

A1 HVAC DUCT PLAN - SECOND FLOOR - AREA 'F'

1/4" = 1'-0"

GENERAL NOTES

1. SEE M-001 FOR GENERAL MECHANICAL NOTES THAT SHALL APPLY TO ALL SHEETS UNLESS NOTED OTHERWISE.
2. MAXIMUM BEND FOR FLEX DUCTS IS 45° AND MAXIMUM LENGTH OF DUCT IS 5'-0".
3. CONTRACTOR SHALL REFER TO MECHANICAL DETAILS AND SPECIFICATIONS FOR ADDITIONAL INSTALLATION REQUIREMENTS.

(X) KEY NOTES

1. PROVIDE NEW VAV BOX AS INDICATED PER SCHEDULE. INSTALL PER MANUFACTURER INSTALLATION INSTRUCTIONS. MAINTAIN RECOMMENDED CLEARANCES FOR SERVICE & MIN. STRAIGHT LENGHT UPSTREAM OF VAV . SEE DETAIL FOR PIPING & INSTALLATION.
2. PROVIDE NEW SUPPLY, RETURN, EXHAUST & TRANSFER DUCTWORK AS INDICATED. INSULATE DUCTWORK PER SPECIFICATIONS. INSTALL PER DETAIL. COORDINATE EXACT ROUTING IN FIELD WITH OTHER TRADES.

KEY PLAN

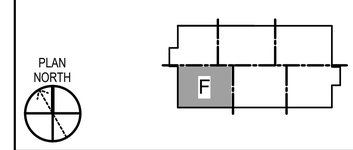

GRAPHIC SCALE(S)

1/4" = 1' - 0" 0 1' 5' 10' 15'

SYM	DESCRIPTION	DATE	APPR

NAVFAC

LICENSED PROFESSIONAL ENGINEER JITENDRA VALMIK 062-072817 STATE OF ILLINOIS
EXP: 11/30/2027
SIGNED: 03/11/2026

ASMD LLC.

APPROVED
FOR COMMANDER NAVFAC
ACTIVITY
NATHANIEL PYRON, MILCON PLANNER, DPPH
SATISFACTORY TO DATE 3/10/2026
DES JV DRW AS CHK AP
PM/DM DKS/DMK
BRANCH MANAGER KYM
CHIEF ENG/ARCH KYM
FIRE PROTECTION RYO

DEPARTMENT OF THE NAVY
NAVFAC PACIFIC
NAVAL FACILITIES ENGINEERING SYSTEMS COMMAND ~ PACIFIC
NAVAL FACILITIES ENGINEERING SYSTEMS COMMAND
MAKALAPA, HAWAII
U.S. NAVSUPPACT
MCB CAMP BLAZ, GUAM
JFY 2022 PROJECT J-875
BATTLE STAFF TRAINING FACILITY
HVAC DUCT PLAN - SECOND FLOOR - AREA 'F'

SCALE: AS NOTED
EPROJECT NO.: 1696746
CONSTR. CONTR. NO.
NAVFAC DRAWING NO. 17322106
SHEET 266 OF 468
MH116

DRAWFORM REVISION: 25 AUGUST 2020

3/11/2026 4:36:51 PM MH116
C:\REVIT_2024_PROJECT_FILES\BLDG-J-875-1696746-M_7542_Jon_Koenig.rvt

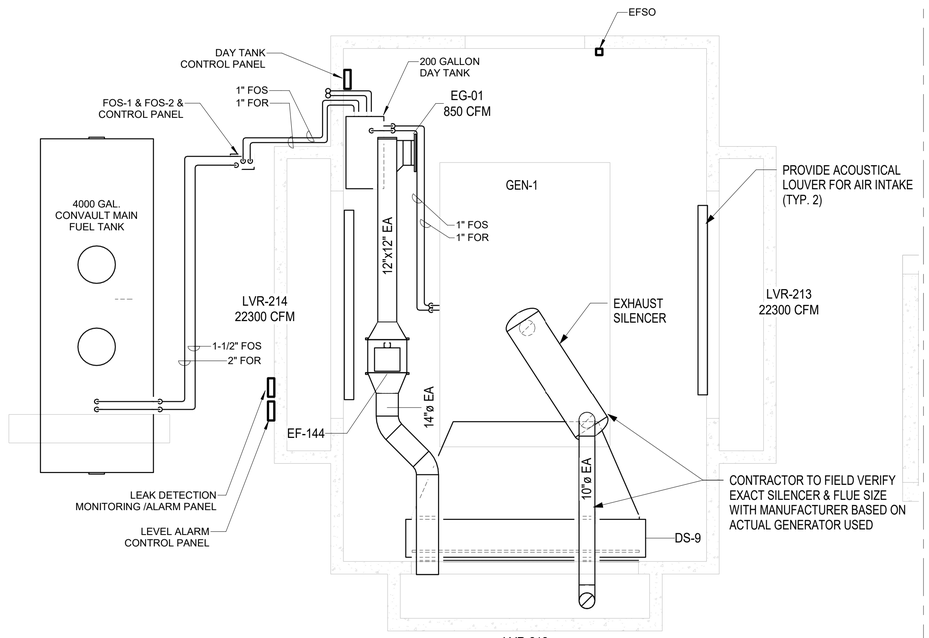

B2 **MECHANICAL SITE PLAN**

1/4" = 1'-0"

PART OF OPTION ITEM #2

GENERAL NOTES

KEY NOTES

1. PROVIDE AN EMERGENCY FUEL SHUT (EFSO) OFF SIWTCH AS INDICATED. COORDINATE EXACT LOCATION IN FIELD WITH OTHER TRADES. WHEN EFSO PUSHBUTTON IS PRESSED ALL FUEL PUMP MUST SHUT DOWN AND ALL MOTOR OPERATED FUEL VALVE SHALL CLOSE. AN ALARM MUST BE ANNUNCIATED AT THE MASTER ALARM PANEL. OPERATION OF ALL PUMPS AND VALVES MUST BE DISCONTINUED UNTIL ALL EFSO SWITCHES ARE CLEARED AND THE ALARM ACKNOWLEDGED.

KEY PLAN

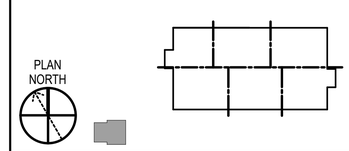

GRAPHIC SCALE(S)

1/4" = 1' - 0" 0 1' 5' 10' 15'

SYM	DESCRIPTION	DATE	APPR

NAVFAC

LICENSED PROFESSIONAL ENGINEER JITENDRA VALMIK 062-072817 STATE OF ILLINOIS

EXP: 11/30/2027
SIGNED: 03/11/2026 BY:A.

ASMD LLC.

AE INFO

APPROVED

FOR COMMANDER NAVFAC

ACTIVITY
NATHANIEL PYRON, MILCON PLANNER, DPPH

SATISFACTORY TO DATE 3/10/2026

DES JV | DRW AS | CHK AP

PM/DM DKS/DMK

BRANCH MANAGER KYM

CHIEF ENG/ARCH KYM

FIRE PROTECTION RYO

DEPARTMENT OF THE NAVY
NAVAL FACILITIES ENGINEERING SYSTEMS COMMAND ~ PACIFIC
NAVFAC PACIFIC
U.S. NAVSUPPACT
NAVAL FACILITIES ENGINEERING SYSTEMS COMMAND
MAKALAPA, HAWAII
MCB CAMP BLAZ, GUAM
JFY 2022 PROJECT J-875
BATTLE STAFF TRAINING FACILITY
GENERATOR/TANK MECHANICAL PLAN

SCALE: AS NOTED

EPROJECT NO.: 1696746

CONSTR. CONTR. NO.

NAVFAC DRAWING NO.
17322107

SHEET 267 OF 468

MH127

DRAWFORM REVISION: 25 AUGUST 2020

3/11/2026 4:36:35 PM MH127
C:\REVIT_2024_PROJECT_FILES\BLDG-J-875-1696746-M_7542_Jon_Koenig.rvt

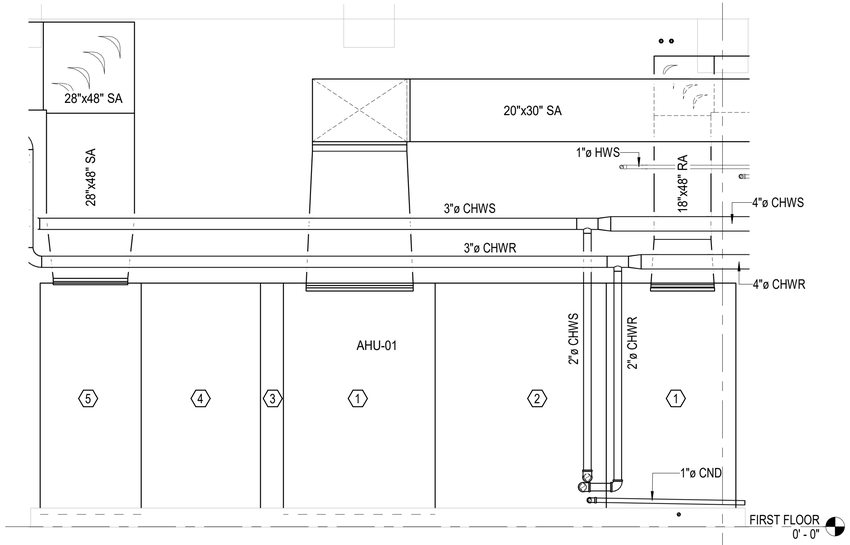

C1 AHU-1 SECTION
1/2" = 1'-0"

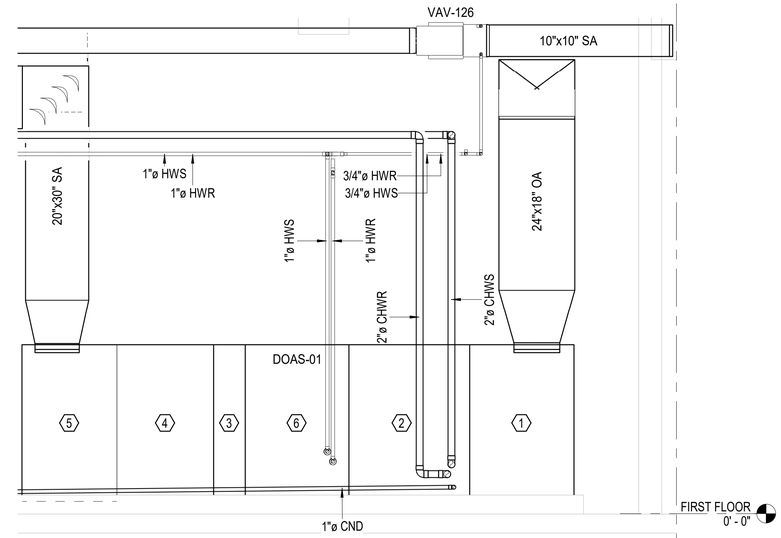

C4 DOAS-1 SECTION
1/2" = 1'-0"

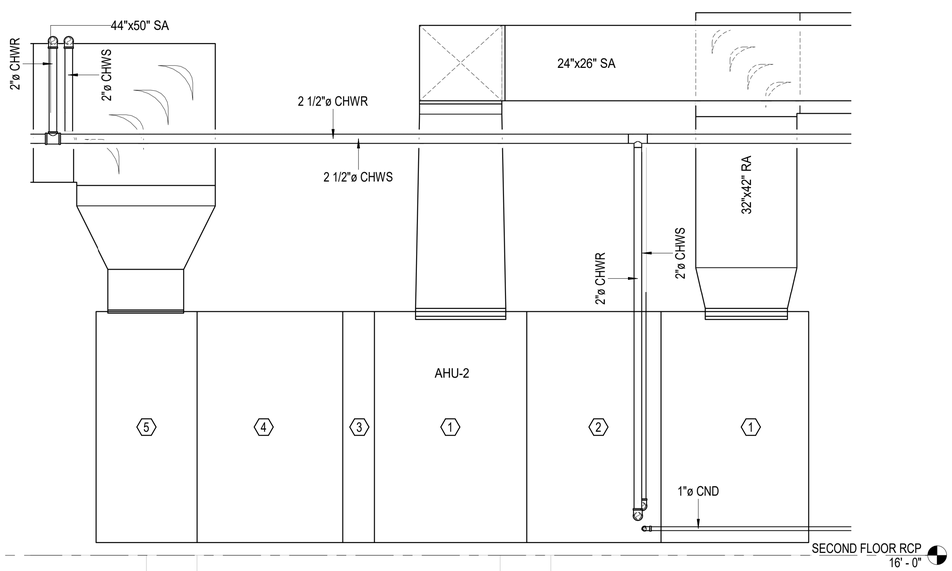

A1 AHU-2 SECTION
1/2" = 1'-0"

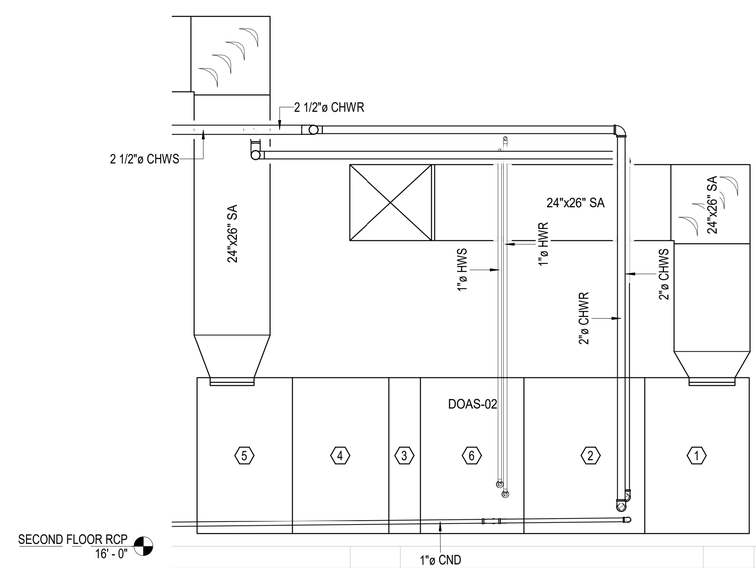

A4 DOAS-2 SECTION
1/2" = 1'-0"

KEYNOTES:

1. AIR MIXING SECTION
2. COOLING COIL
3. ACCESS SECTION
4. SUPPLY FAN
5. DISCHARGE PLENUM
6. HEATING COIL

1/2" = 1' - 0" 0 6" 1' 2' 3' 4' 5'

SYM	DESCRIPTION	DATE	APPR

NAVFAC

LICENSED PROFESSIONAL ENGINEER JITENDRA VALMIK 062-072817 OF ILLINOIS
EXP: 11/30/2027
SIGNED: 03/11/2026 M.A.

ASMD LLC. A/E INFO

APPROVED

FOR COMMANDER NAVFAC

ACTIVITY
NATHANIEL PYRON, MILCON PLANNER, DPPH

SATISFACTORY TO DATE 3/10/2026

DES	JV	DRW	AS	CHK	AP

PM/DM	DKS/DMK
BRANCH MANAGER	KYM
CHIEF ENG/ARCH	KYM
FIRE PROTECTION	RYO

DEPARTMENT OF THE NAVY
NAVFAC PACIFIC
NAVAL FACILITIES ENGINEERING SYSTEMS COMMAND ~ PACIFIC
NAVAL FACILITIES ENGINEERING SYSTEMS COMMAND
MAKALAPA, HAWAII
U.S. NAVSUPPACT
MCB CAMP BLAZ, GUAM
JFY 2022 PROJECT J-875
BATTLE STAFF TRAINING FACILITY
MECHANICAL SECTIONS - SHEET 1

SCALE: AS NOTED
EPROJECT NO.: 1696746
CONSTR. CONTR. NO.
NAVFAC DRAWING NO. 17322108
SHEET 268 OF 468
MH300

DRAWFORM REVISION: 25 AUGUST 2020

3/11/2026 4:36:39 PM MH300
C:\REVIT_2024_PROJECT_FILES\BLDG-J-875-1696746-M_7542_Jon_Koenig.rvt

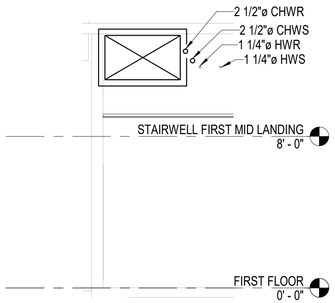

C1 COORIDOR SECTION 1ST FLOOR

1/4" = 1'-0"

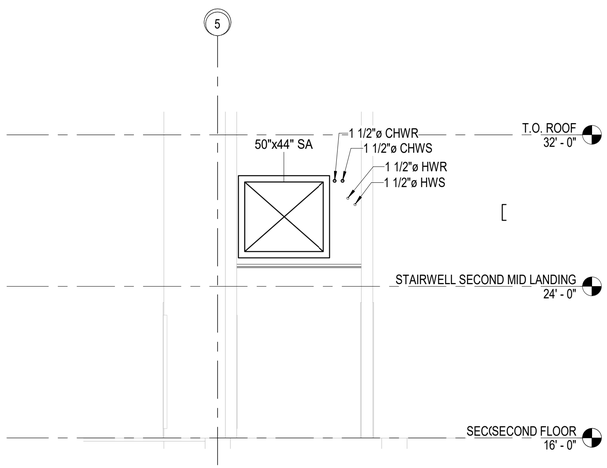

B1 COORIDOR SECTION 2ND FLOOR

1/4" = 1'-0"

1/2" = 1' - 0" 0 6" 1' 2' 3' 4' 5'

SYM	DESCRIPTION	DATE	APPR

NAVFAC

LICENSED PROFESSIONAL ENGINEER
JITENDRA VALMIK
062-072817
OF ILLINOIS
EXP: 11/30/2027
SIGNED: 03/11/2026 M.A.

ASMD LLC.
A/E INFO

APPROVED

FOR COMMANDER NAVFAC

ACTIVITY
NATHANIEL PYRON, MILCON PLANNER, DPPH

SATISFACTORY TO DATE 3/10/2026

DES	JV	DRW	AS	CHK	AP

PM/DM DKS/DMK
BRANCH MANAGER KYM
CHIEF ENG/ARCH KYM
FIRE PROTECTION RYO

DEPARTMENT OF THE NAVY
NAVAL FACILITIES ENGINEERING SYSTEMS COMMAND
NAVFAC PACIFIC
U.S. NAVSUPPACT

NAVAL FACILITIES ENGINEERING SYSTEMS COMMAND ~ PACIFIC
MAKALAPA, HAWAII
MCB CAMP BLAZ, GUAM

JFY 2022 PROJECT J-875
BATTLE STAFF TRAINING FACILITY

MECHANICAL SECTIONS - SHEET 2

SCALE: AS NOTED
EPROJECT NO.: 1696746
CONSTR. CONTR. NO.
NAVFAC DRAWING NO. 17322109
SHEET 269 OF 468

MH301

DRAWFORM REVISION: 25 AUGUST 2020

3/11/2026 4:36:43 PM MH301
C:\REVIT_2024_PROJECT_FILES\BLDG-J-875-16967464M_7542_Jon_Koenig.rvt

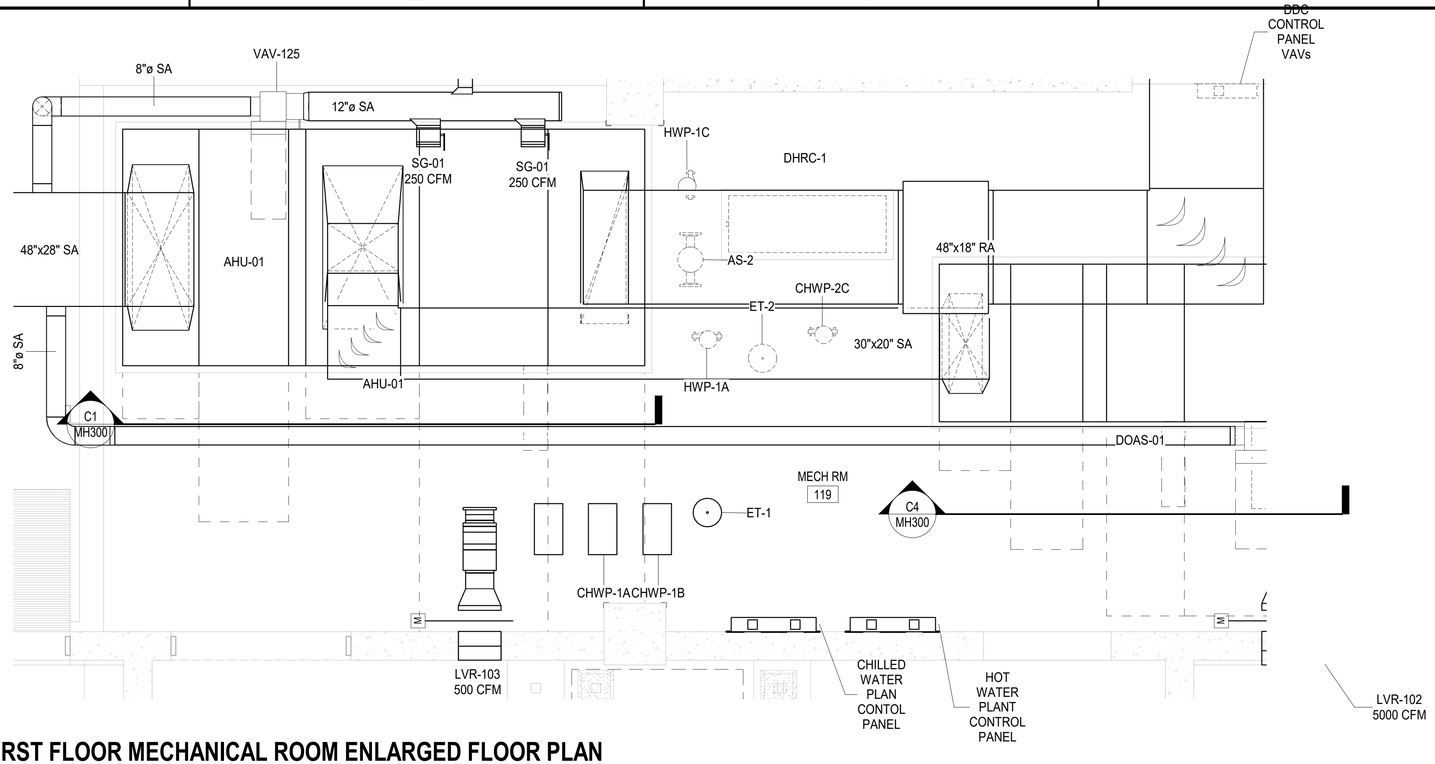

C1 FIRST FLOOR MECHANICAL ROOM ENLARGED FLOOR PLAN

3/8" = 1'-0"

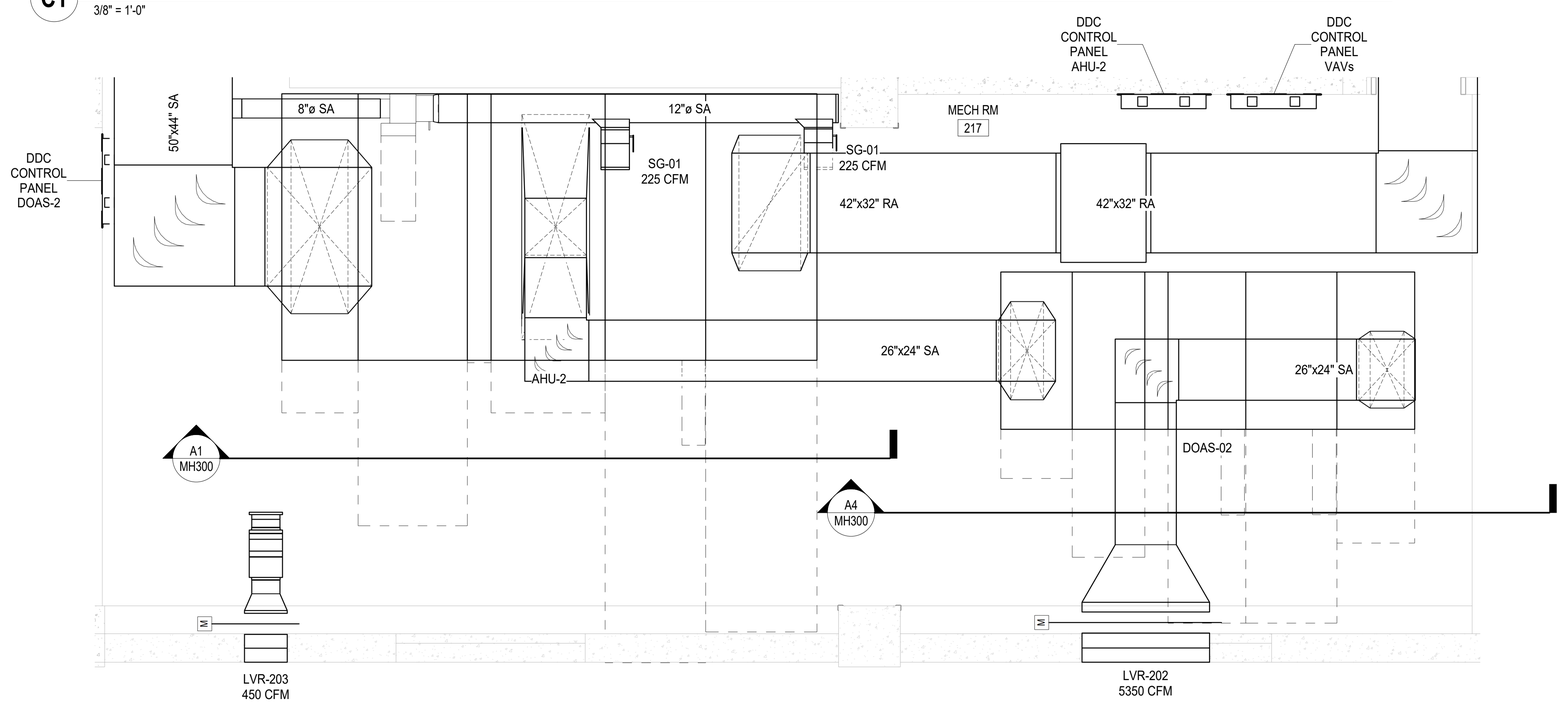

A1 SECOND FLOOR MECHANICAL ROOM ENLARGED FLOOR PLAN

3/8" = 1'-0"

GENERAL NOTES

1. ALL DUCTWORK AND EQIUPMENT SHOWN ON THIS DRAWING IS DIAGRAMMATIC. LOCATE ALL DUCTWORK AND EQUIPMENT SO AS TO CLEAR ALL OBSTACLES.
2. ALL WORK TO BE PERFORMED IN ACCORDANCE WITH APPLICABLE FEDERAL, STATE, AND LOCAL CODES.
3. COORDINATE ALL HVAC INSTALLATIONS WITH ALL APPLICABLE TRADES.
4. VERIFY ALL DIMENSIONS AND CONDITIONS PRIOR TO THE START OF INSTALLATION OF ALL MECHANICAL AND PLUMBING EQUIPMENT. CONSTRUCTION DISCREPANCIES TO BE BROUGHT TO THE IMMEDIATE ATTENTION OF THE CONTRACTING OFFICER FOR A RESOLUTION.
5. COORDINATE ALL REQUIRED CONDUIT, PIPING AND CHASES WITH OTHER TRADES & SUB-CONTRACTORS.

KEY PLAN

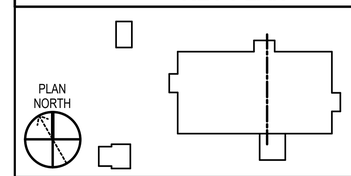

GRAPHIC SCALE(S)

3/8" = 1' - 0" 0 1' 2' 3' 4' 5' 10'

SYM	DESCRIPTION	DATE	APPR

NAVFAC

LICENSED PROFESSIONAL ENGINEER JITENDRA VALMIK 062-072817 OF ILLINOIS
EXP: 11/30/2027
SIGNED: 03/11/2026 BY:A.

ASMD LLC.
A/E INFO

APPROVED
FOR COMMANDER NAVFAC
ACTIVITY
NATHANIEL PYRON, MILCON PLANNER, DPPH
SATISFACTORY TO DATE 3/10/2026
DES JV DRW AS CHK AP
PMDM DKS/DMK
BRANCH MANAGER KYM
CHIEF ENG/ARCH KYM
FIRE PROTECTION RYO

DEPARTMENT OF THE NAVY
NAVFAC PACIFIC
NAVAL FACILITIES ENGINEERING SYSTEMS COMMAND ~ PACIFIC
NAVAL FACILITIES ENGINEERING SYSTEMS COMMAND
MAKALAPA, HAWAII
U.S. NAVSUPPACT
MCB CAMP BLAZ, GUAM
JFY 2022 PROJECT J-875
BATTLE STAFF TRAINING FACILITY
ENLARGED FLOOR PLAN - SHEET 1

SCALE: AS NOTED
EPROJECT NO.: 1696746
CONSTR. CONTR. NO.
NAVFAC DRAWING NO. 17322110
SHEET 270 OF 468
MH400
DRAWFORM REVISION: 25 AUGUST 2020

3/11/2026 4:36:47 PM MH400
C:\REVIT_2024_PROJECT_FILES\BLDG-J875-1696746-M_7542_Jon_Koenig.rvt

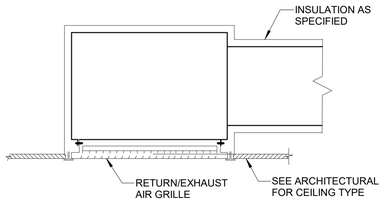

NOTES:

1. DO NOT INSULATE EXHAUST.
2. HEIGHT AND WIDTH OF PLENUM SHALL MATCH GRILLE SIZE.

C1 RETURN/EXHAUST GRILLE

SCALE: NONE

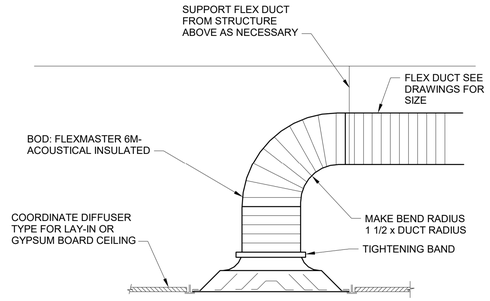

C2 DIFFUSER/GRILLE CONNECTION

SCALE: NONE

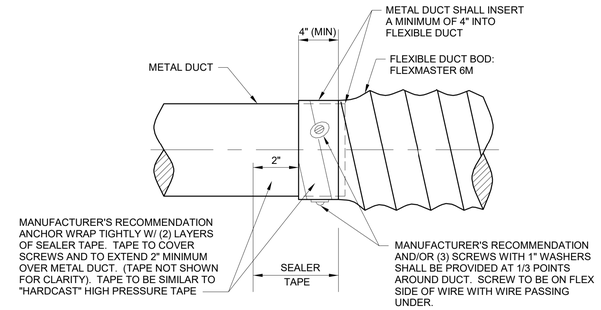

C4 FLEXIBLE DUCT/RIGID DUCT CONNECTION

SCALE: NONE

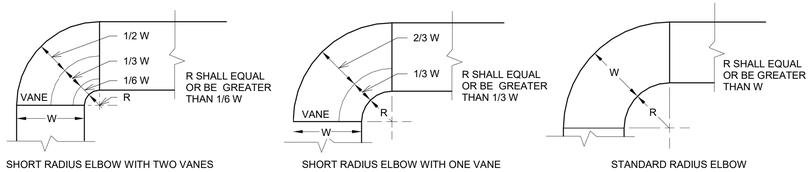

SHORT RADIUS ELBOW WITH TWO VANES

SHORT RADIUS ELBOW WITH ONE VANE

STANDARD RADIUS ELBOW

NOTES:

1. THE INTERIOR SURFACE OF ALL RADIUS ELBOWS SHALL BE MADE ROUND.
2. ALL STANDARD RADIUS ELBOWS SHOWN ON PLANS MAY BE MADE SHORT RADIUS ELBOWS. ALL SHORT RADIUS ELBOWS SHALL HAVE VANES. VANES SHALL BE CONSTRUCTED, SUPPORTED AND FASTENED AS RECOMMENDED BY SMACNA.

B1 RADIUS ELBOWS

SCALE: NONE

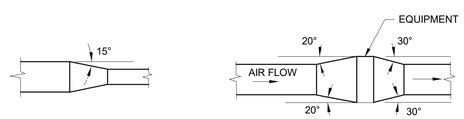

PLAN OR SIDE VIEW DUCT TRANSITION

PLAN OR SIDE VIEW DUCT TRANSITION WITH EQUIPMENT IN DUCT

NOTES:

1. UNLESS OTHERWISE INDICATED ON PLANS, MAXIMUM ANGLES SHOWN SHALL APPLY.

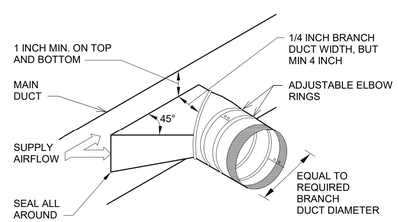

TYPICAL BRANCH TAKE-OFF FITTING

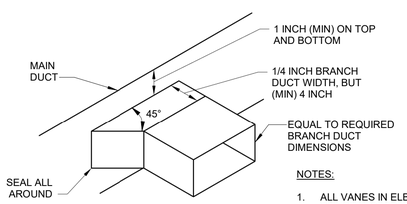

NOTES:

1. ALL VANES IN ELBOWS AND OTHER FITTINGS SHALL BE CONSTRUCTED AND INSTALLED AS DETAILED BY SMACNA.
2. ALL SINGLE VANES SHALL HAVE A 2" RADIUS, 1 1/2" MAXIMUM SPACE BETWEEN VANES AND 2" TRAILING EDGE. WHEN W1 EQUALS W2 AND IS GREATER THAN 20", VANES SHALL BE DOUBLE VANE TYPE.
3. WHEN W1 DOES NOT EQUAL W2, VANE SHALL BE SINGLE VANE TYPE REGARDLESS OF W DIMENSION. WHEN W1 EQUALS W2 AND IS GREATER THAN 20", VANES SHALL BE DOUBLE VANE TYPE.

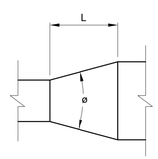

CONCENTRIC TRANSITION Θ MAX. 45° DIVERGING, 60° CONVERGING

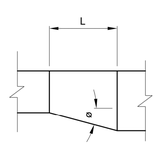

ECCENTRIC TRANSITION ø MAX. 30° (EXCEPT 45° IS PERMITTED AT ROUND TO FLAT OVAL)

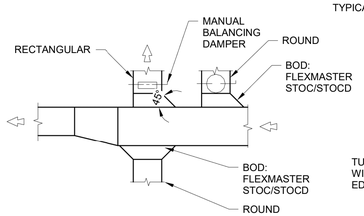

TYPICAL BRANCH TAKE-OFFS

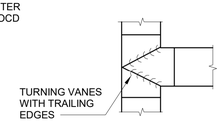

TEE CONNECTION

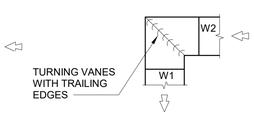

ELBOW

A1 TYPICAL DUCT TRANSITIONS/FITTINGS

SCALE: NONE

SYM	DESCRIPTION	DATE	APPR

NAVFAC

LICENSED PROFESSIONAL ENGINEER JITENDRA VALMIK 062-072817 OF ILLINOIS

EXP: 11/30/2027
SIGNED: 03/11/2026 BY: A.

ASMD LLC. AE INFO

APPROVED

FOR COMMANDER NAVFAC

ACTIVITY: NATHANIEL PYRON, MILCON PLANNER, DPPH

SATISFACTORY TO DATE 3/10/2026

DES JV | DRW AS | CHK AP

PM/DM DKS/DMK

BRANCH MANAGER KYM

CHIEF ENG/ARCH KYM

FIRE PROTECTION RYO

DEPARTMENT OF THE NAVY
NAVAL FACILITIES ENGINEERING SYSTEMS COMMAND
NAVFAC PACIFIC
U.S. NAVSUPPACT

NAVAL FACILITIES ENGINEERING SYSTEMS COMMAND ~ PACIFIC
MAKALAPA, HAWAII

MCB CAMP BLAZ, GUAM

JFY 2022 PROJECT J-875
BATTLE STAFF TRAINING FACILITY

HVAC DETAILS - SHEET 1

SCALE: NTS

EPROJECT NO.: 1696746

CONSTR. CONTR. NO.

NAVFAC DRAWING NO. 17322111

SHEET 271 OF 468

MH501

DRAWFORM REVISION: 25 AUGUST 2020

3/11/2026 4:36:50 PM MH501
C:\REVIT_2021_PROJECT_FILES\BLDG-J875-1696746-M_7542_Jon_Koenig.rvt

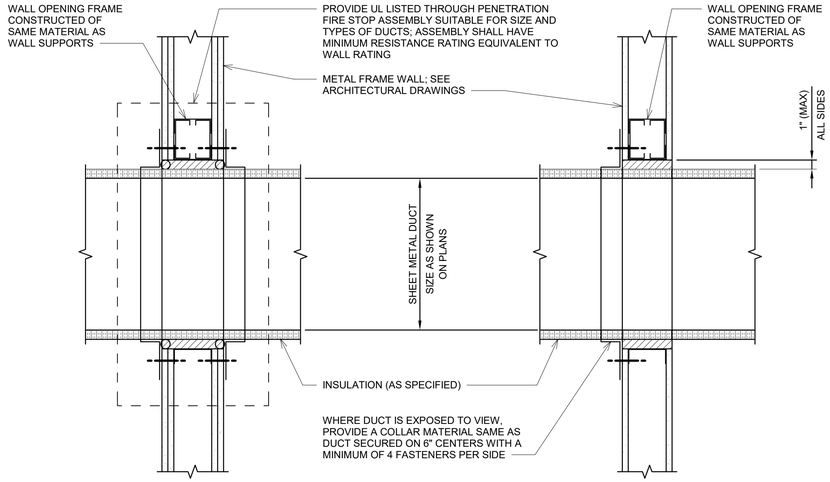

VIBRATION ISOLATION NOTES:

1. ANNULAR SPACE BETWEEN DUCT AND SLEEVE SHALL BE FREE OF ANY FOREIGN MATERIAL.
2. PIPE SHALL NOT RIGIDLY CONTACT PARTITION AT ANY POINT. WEDGES SHALL NOT BE USED TO MAINTAIN PIPE POSITION.
3. DUCT SUPPORTS SHALL BE LOCATED WITHIN 8' FROM THE PARTITION ON BOTH SIDES.
4. PROVIDE SPRING HANGER ISOLATOR LOCATED AS CLOSE TO STRUCTURE AS PRACTICAL.
5. CENTER DUCT IN SLEEVE.
6. PACK ANNULAR SPACE BETWEEN DUCT AND SLEEVE 100% WITH MINERAL WOOL OR 1.5 PCF FIBERGLASS.

C1 METAL FRAME WALL/CEILING DUCT PENETRATIONS

SCALE: NONE

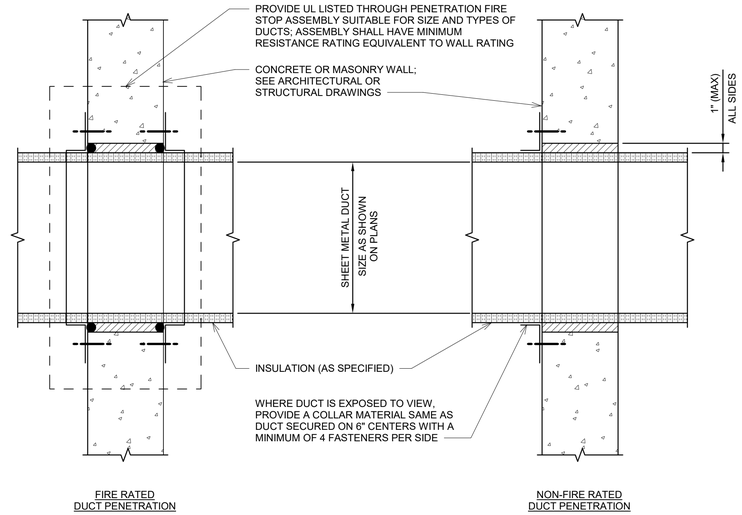

VIBRATION ISOLATION NOTES:

1. ANNULAR SPACE BETWEEN DUCT AND SLEEVE SHALL BE FREE OF ANY FOREIGN MATERIAL.
2. PIPE SHALL NOT RIGIDLY CONTACT PARTITION AT ANY POINT. WEDGES SHALL NOT BE USED TO MAINTAIN PIPE POSITION.
3. DUCT SUPPORTS SHALL BE LOCATED WITHIN 8' FROM THE PARTITION ON BOTH SIDES.
4. PROVIDE SPRING HANGER ISOLATOR LOCATED AS CLOSE TO STRUCTURE AS PRACTICAL.
5. CENTER DUCT IN SLEEVE.
6. PACK ANNULAR SPACE BETWEEN DUCT AND SLEEVE 100% WITH MINERAL WOOL OR 1.5 PCF FIBERGLASS.

C3 CONCRETE OR MASONRY WALL DUCT PENETRATIONS

SCALE: NONE

SYM	DESCRIPTION	DATE	APPR

NAVFAC

LICENSED PROFESSIONAL ENGINEER JITENDRA VALMIK 062-072817 OF ILLINOIS
EXP: 11/30/2027
SIGNED: 03/11/2026 IEC/A

ASMD LLC. A/E INFO

APPROVED

FOR COMMANDER NAVFAC

ACTIVITY: NATHANIEL PYRON, MILCON PLANNER, DPPH

SATISFACTORY TO DATE: 3/10/2026

DES JV | DRW AS | CHK AP

PM/DM: DKS/DMK

BRANCH MANAGER: KYM

CHIEF ENG/ARCH: KYM

FIRE PROTECTION: RYO

DEPARTMENT OF THE NAVY
NAVFAC PACIFIC
NAVAL FACILITIES ENGINEERING SYSTEMS COMMAND
NAVAL FACILITIES ENGINEERING SYSTEMS COMMAND ~ PACIFIC
MAKALAPA, HAWAII
U.S. NAVSUPPACT
MCB CAMP BLAZ, GUAM
JFY 2022 PROJECT J-875
BATTLE STAFF TRAINING FACILITY
HVAC DETAILS - SHEET 2

SCALE: NTS

EPROJECT NO.: 1696746

CONSTR. CONTR. NO.

NAVFAC DRAWING NO. 17322112

SHEET 272 OF 468

MH502

DRAWFORM REVISION: 25 AUGUST 2020

3/11/2026 4:36:53 PM MH502
C:\REVIT_2024_PROJECT_FILES\BLDG-J-875-1696746-M_7542_Jon_Koenig.rvt

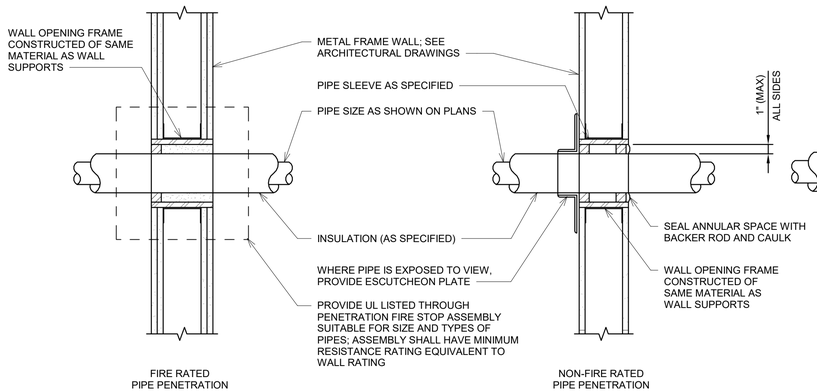

VIBRATION ISOLATION NOTES:

1. ANNULAR SPACE BETWEEN PIPE AND SLEEVE SHALL BE FREE OF ANY FOREIGN MATERIAL.
2. PIPE SHALL NOT RIGIDLY CONTACT PARTITION AT ANY POINT. WEDGES SHALL NOT BE USED TO MAINTAIN PIPE POSITION.
3. PIPE SUPPORTS SHALL BE LOCATED WITHIN 8' FROM THE PARTITION ON BOTH SIDES.
4. PROVIDE SPRING HANGER ISOLATOR LOCATED AS CLOSE TO STRUCTURE AS PRACTICAL.
5. CENTER PIPE IN SLEEVE.
6. PACK ANNULAR SPACE BETWEEN PIPE AND SLEEVE 100% WITH MINERAL WOOL OR 1.5 PCF FIBERGLASS.

C1 METAL FRAME WALL PIPE PENETRATIONS

SCALE: NONE

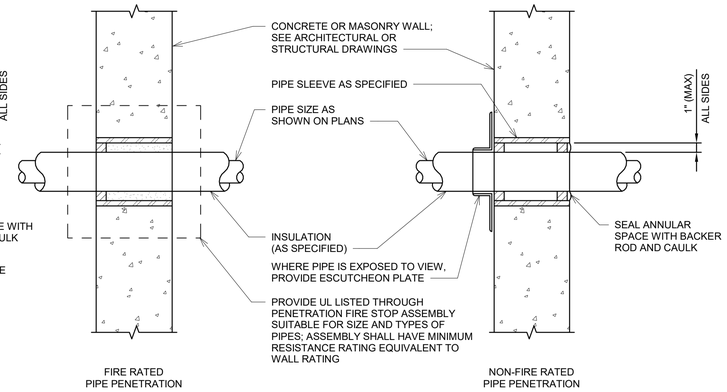

VIBRATION ISOLATION NOTES:

1. ANNULAR SPACE BETWEEN PIPE AND SLEEVE SHALL BE FREE OF ANY FOREIGN MATERIAL.
2. PIPE SHALL NOT RIGIDLY CONTACT PARTITION AT ANY POINT. WEDGES SHALL NOT BE USED TO MAINTAIN PIPE POSITION.
3. PIPE SUPPORTS SHALL BE LOCATED WITHIN 8' FROM THE PARTITION ON BOTH SIDES.
4. PROVIDE SPRING HANGER ISOLATOR LOCATED AS CLOSE TO STRUCTURE AS PRACTICAL.
5. CENTER PIPE IN SLEEVE.
6. PACK ANNULAR SPACE BETWEEN PIPE AND SLEEVE 100% WITH MINERAL WOOL OR 1.5 PCF FIBERGLASS.

C3 CONCRETE OR MASONRY WALL PIPE PENETRATIONS

SCALE: NONE

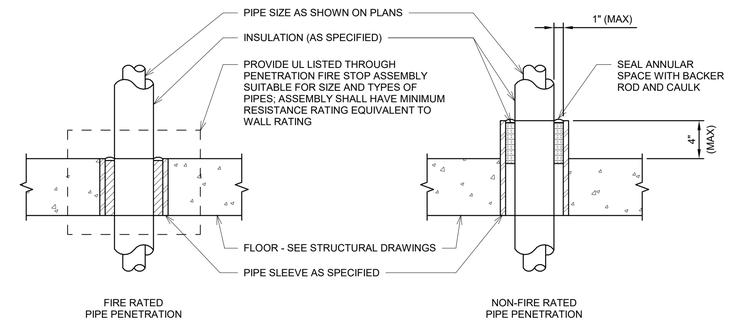

VIBRATION ISOLATION NOTES:

1. PROVIDE NEOPRENE PADS BETWEEN PIPE RISER CLAMPS AND FLOOR STRUCTURE: 30-50 DUROMETER, 3/4" THICK NEOPRENE WAFFLE PAD WITH STEEL PLATE.
2. NORMALLY FULL PIPES SUCH AS DOMESTIC WATER AND CHILLED WATER: SIZE PLATES AND NEOPRENE PADS TO ACCOMODATE PIPE AND WATER WEIGHT TOGETHER WITH 10-15% DEFLECTION.
3. NORMALLY EMPTY PIPES SUCH AS DRAIN AND VENT PIPES: SIZE PLATES AND NEOPRENE PADS TO ACCOMODATE PIPE WEIGHT ONLY WITH 10-15% DEFLECTION.
4. PACK ANNULAR SPACE BETWEEN PIPE AND SLEEVE 100% WITH MINERAL WOOL OR 1.5 PCF FIBERGLASS.

C4 PIPE FLOOR PENETRATIONS

SCALE: NONE

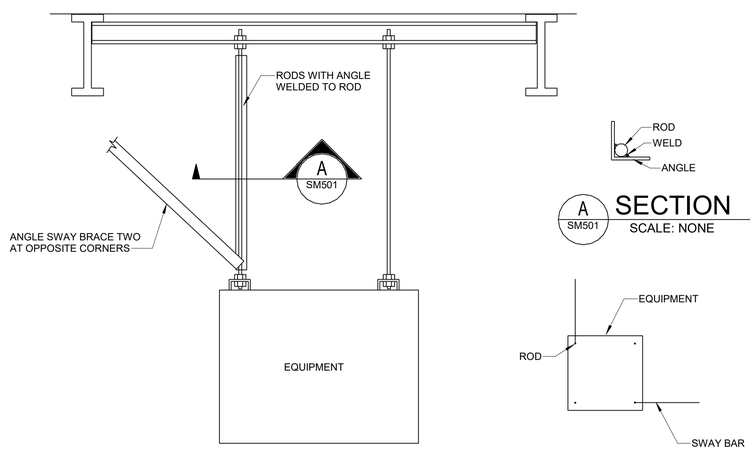

NOTES:

1. PER UFC 4-010-01, FOR EQUIPMENT EXCEEDING 30 POUNDS OR MORE (EXCLUDING DISTRIBUTION SYSTEMS THAT COLLECTIVELY EXCEED THAT WEIGHT):
   A. VERTICAL SUPPORTS SHALL RESIST FORCES OF 1.5 TIMES THE EQUIPMENT WEIGHT IN THE VERTICAL DIRECTIONS.
   B. SWAY BRACES SHALL RESIST FORCES OF 0.5 TIMES THE EQUIPMENT WEIGHT IN THE HORIZONTAL DIRECTION.
2. ANGLE ON RODS AND SWAY BRACE IS TYPICAL ON AN ACCEPTABLE ARRANGEMENT. CABLE BASED SUPPORT SYSTEMS MEETING UFC REQUIREMENTS ARE ALSO ACCEPTABLE.
3. PROVIDE VIBRATION ISOLATION FOR AIR HANDLING EQUIPMENT.

A1 EQUIPMENT HANGING

SCALE: NONE

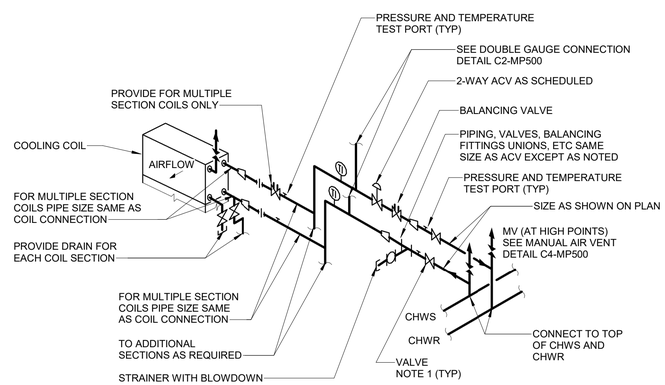

NOTES:

1. PROVIDE VALVE TYPES AS SPECIFIED FOR FLUID SERVICE INDICATED.
2. DRAINS AND VENTS SHALL NOT BE COMBINED TOGETHER.

A2 CHILLED WATER PIPING CONNECTIONS TO COILS IN AIR HANDLING UNITS

SCALE: NONE

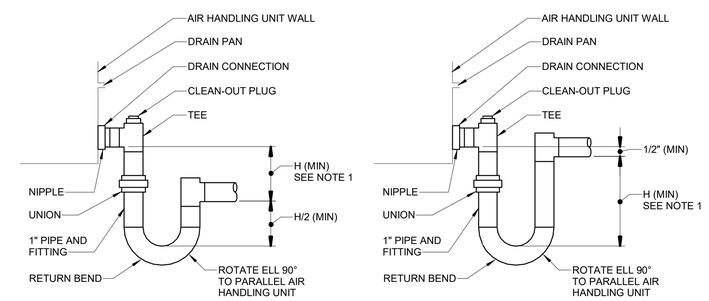

TYPICAL DRAW-THRU UNIT

TYPICAL BLOW-THRU UNIT

NOTES:

1. H = FAN INLET PRESSURE (IN W.C.) + 1/2 IN. MINIMUM.
2. H = FAN INLET PRESSURE (IN W.C.) + 1 IN. MINIMUM.

A4 COOLING COIL CONDENSATE DRAIN

SCALE: NONE

SYM	DESCRIPTION	DATE	APPR

NAVFAC

LICENSED PROFESSIONAL ENGINEER JITENDRA VALMIK 062-072817 OF ILLINOIS
EXP: 11/30/2027
SIGNED: 03/11/2026

ASMD LLC.

APPROVED

FOR COMMANDER NAVFAC

ACTIVITY: NATHANIEL PYRON, MILCON PLANNER, DPPH

SATISFACTORY TO DATE 3/10/2026

DES JV | DRW AS | CHK AP

PM/DM DKS/DMK

BRANCH MANAGER KYM

CHIEF ENG/ARCH KYM

FIRE PROTECTION RYO

DEPARTMENT OF THE NAVY
NAVFAC PACIFIC
U.S. NAVSUPPACT

NAVAL FACILITIES ENGINEERING SYSTEMS COMMAND
NAVAL FACILITIES ENGINEERING SYSTEMS COMMAND – PACIFIC
MAKALAPA, HAWAII

MCB CAMP BLAZ, GUAM

JFY 2022 PROJECT J-875
BATTLE STAFF TRAINING FACILITY

HVAC DETAILS - SHEET 3

SCALE: NTS

EPROJECT NO.: 1696746

CONSTR. CONTR. NO.

NAVFAC DRAWING NO. 17322113

SHEET 273 OF 468

MH503

DRAWFORM REVISION: 25 AUGUST 2020

3/11/2026 4:36:55 PM MH503
C:\REVIT_2024_PROJECT_FILES\BLDG-J-875-1696746-M_7542_Jon_Koenig.rvt

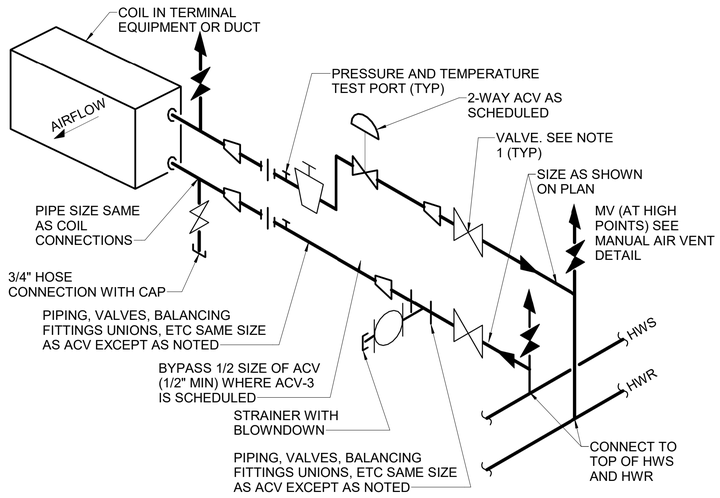

NOTES:
1. PROVIDE VALVE TYPES AS SPECIFIED FOR FLUID SERVICE INDICATED.
2. PROVIDE MANUAL CALIBRATED BALANICING VALVES.

B1 HEATING WATER PIPING CONNECTIONS TO COILS IN TERMINAL EQUIPMENT OR DUCTS

NOT TO SCALE

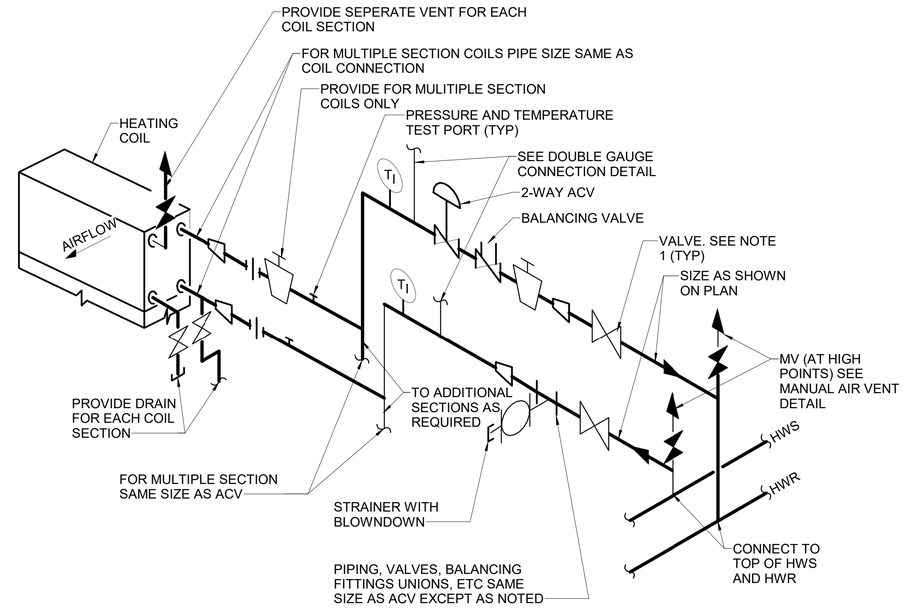

NOTES:
1. PROVIDE VALVE TYPES AS SPECIFIED FOR FLUID SERVICE INDICATED.
2. PROVIDE MANUAL CALIBRATED BALANICING VALVES.

B4 HEATING WATER PIPING CONNECTIONS TO COILS IN AIR HANDLING UNITS

NOT TO SCALE

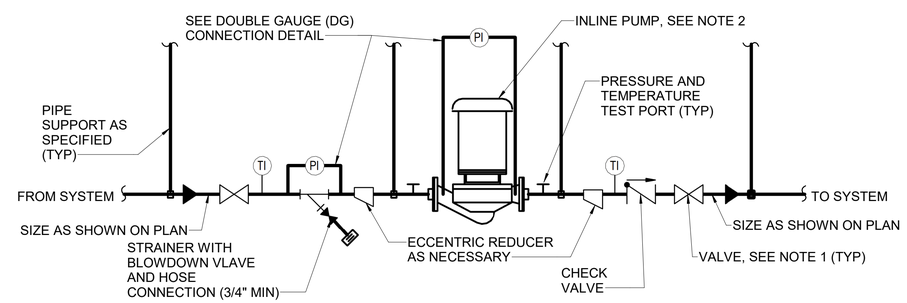

NOTES:
1. PROVIDE VALVE TYPES AS INDICATED IN SPECIFICATION FOR FLUID SERVICES BEING PUMPED.
2. SUPPORT PUMP AS REQUIRED BY MANUFACTURER AND SPECIFIED. PUMP SUPPORT SHALL ELIMINATE STRESS ON PUMP COMPONENTS AND SHALL ALLOW FOR PIPE EXPANSION.

A4 INLINE PIPE MOUNTED PUMP PIPING DETAIL - IMPERIAL

NOT TO SCALE

SYM	DESCRIPTION	DATE	APPR

NAVFAC

LICENSED PROFESSIONAL ENGINEER JITENDRA VALMIK 062-072817 OF ILLINOIS
EXP: 11/30/2027
SIGNED: 03/11/2026

ASMD LLC.

APPROVED

FOR COMMANDER NAVFAC

ACTIVITY
NATHANIEL PYRON, MILCON PLANNER, DPPH

SATISFACTORY TO DATE 3/10/2026

DES JV | DRW AS | CHK AP

PM/DM DKS/DMK
BRANCH MANAGER KYM
CHIEF ENG/ARCH KYM
FIRE PROTECTION RYO

DEPARTMENT OF THE NAVY
NAVFAC PACIFIC
NAVAL FACILITIES ENGINEERING SYSTEMS COMMAND ~ PACIFIC
NAVAL FACILITIES ENGINEERING SYSTEMS COMMAND
MAKALAPA, HAWAII
U.S. NAVSUPPACT
MCB CAMP BLAZ, GUAM
JFY 2022 PROJECT J-875
BATTLE STAFF TRAINING FACILITY
HVAC DETAILS - SHEET 4

SCALE: NTS
EPROJECT NO.: 1696746
CONSTR. CONTR. NO.
NAVFAC DRAWING NO. 17322114
SHEET 274 OF 468
MH504

DRAWFORM REVISION: 25 AUGUST 2020

3/11/2026 4:36:58 PM MH504
C:\REVIT_2024_PROJECT_FILES\BLDG-J-875-1696746-M_7542_Jon_Koenig.rvt

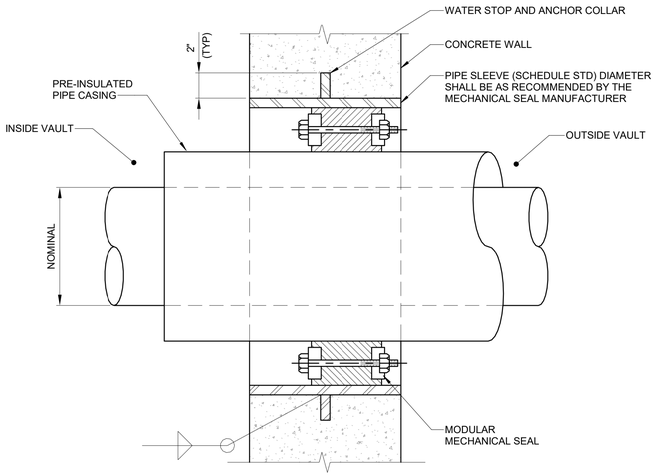

PIPE PENETRATION THRU VAULT WALL BELOW GRADE

C1 SCALE: NONE

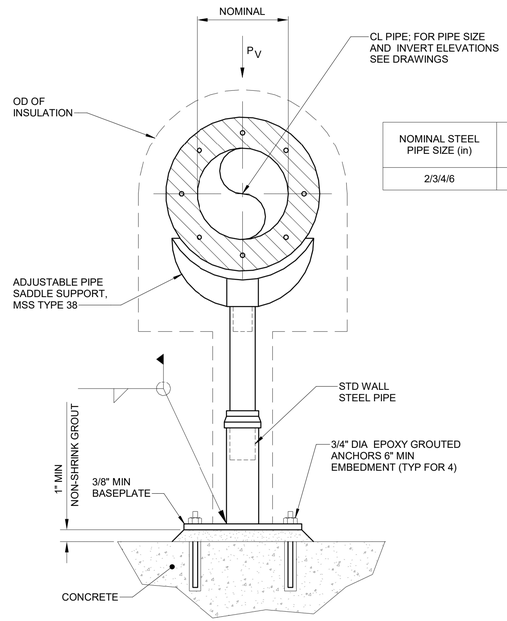

NOMINAL STEEL PIPE SIZE (in)	P^V (lb)
2/3/4/6	500

PIPE SUPPORT

C3 SCALE: NONE

NOTES:

1. FOR DEAD-END VAULTS WITH PIPING TO BE CONTINUED BY ANOTHER PACKAGE, PROVIDE STEEL PIPING, VALVES, AND SUPPORTS WITHIN VAULT AND TERMINATE WITH BLIND FLANGES.
2. PROVIDE 4" CONTROL CONDUITS IN PARALLEL WITH UNDERGROUND CHILLED WATER PIPING. ROUTE CONTROL CONDUITS AND LOCATE HANDHOLES AS NECESSARY TO AVOID CONFLICTS WITH OTHER UTILITIES. CONTROL CONDUITS SHALL MAINTAIN MINIMUM CLEARANCE OF 12" FROM OTHER UTILITIES.
3. PROVIDE HANDHOLES SPACED A MAXIMUM OF 600 FEET APART ALONG THE CHILLED WATER ROUTE AND AT EVERY TEE.

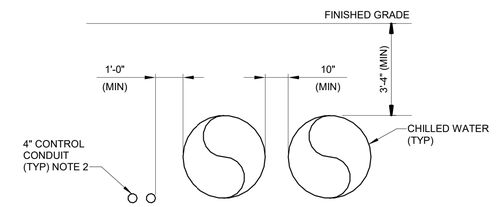

TYPICAL UNDERGROUND CHILLED WATER CROSS SECTION

C4 SCALE: NONE

SYM	DESCRIPTION	DATE	APPR

NAVFAC

LICENSED PROFESSIONAL ENGINEER JITENDRA VALMIK 062-072817 OF ILLINOIS
EXP: 11/30/2027
SIGNED: 03/11/2026

ASMD LLC.
A/E INFO

APPROVED

FOR COMMANDER NAVFAC

ACTIVITY
NATHANIEL PYRON, MILCON PLANNER, DPPH

SATISFACTORY TO DATE 3/10/2026

DES JV | DRW AS | CHK AP

PM/DM DKS/DMK
BRANCH MANAGER KYM
CHIEF ENG/ARCH KYM
FIRE PROTECTION RYO

DEPARTMENT OF THE NAVY
NAVAL FACILITIES ENGINEERING SYSTEMS COMMAND
NAVFAC PACIFIC
NAVAL FACILITIES ENGINEERING SYSTEMS COMMAND ~ PACIFIC
MAKALAPA, HAWAII
U.S. NAVSUPPACT
MCB CAMP BLAZ, GUAM
JFY 2022 PROJECT J-875
BATTLE STAFF TRAINING FACILITY
HVAC DETAILS - SHEET 5

SCALE: NTS
EPROJECT NO.: 1696746
CONSTR. CONTR. NO.
NAVFAC DRAWING NO. 17322115
SHEET 275 OF 468

MH505

DRAWFORM REVISION: 25 AUGUST 2020

3/11/2026 4:37:01 PM MH505
C:\REVIT_2024_PROJECT_FILES\BLDG-J-875-1696746-M_7542_Jon_Koenig.rvt

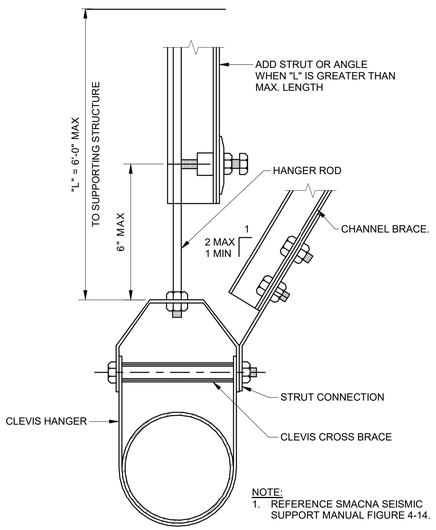

NOTE:
1. REFERENCE SMACNA SEISMIC SUPPORT MANUAL FIGURE 4-14.

C1 STRUT BRACING FOR PIPES
NOT TO SCALE

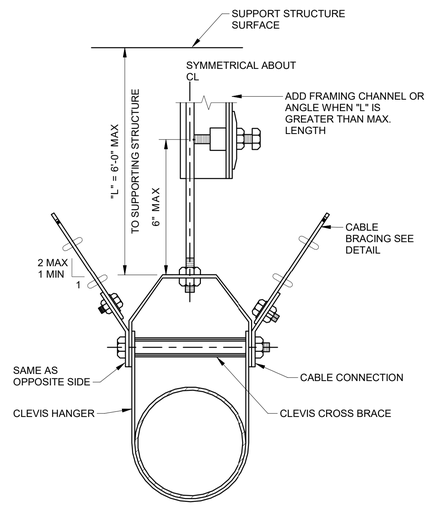

NOTE:
1. REFERENCE SMACNA SEISMIC SUPPOR MANUAL FIGURE 4-18.

C2 CABLE BRACING FOR PIPES
NOT TO SCALE

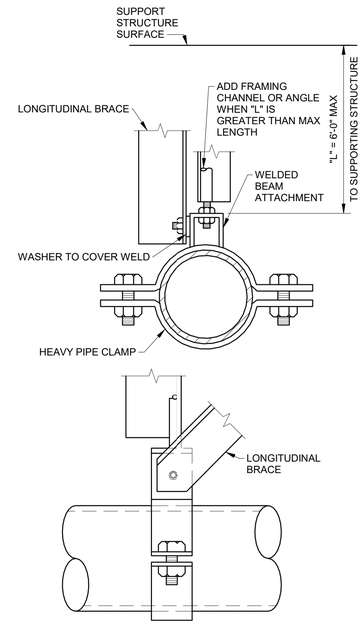

NOTE:
1. REFERENCE SMACNA SEISMIC SUPPORT MANUAL FIGURE 4-16.

C3 LONGITUDINAL BRACING FOR PIPES
NOT TO SCALE

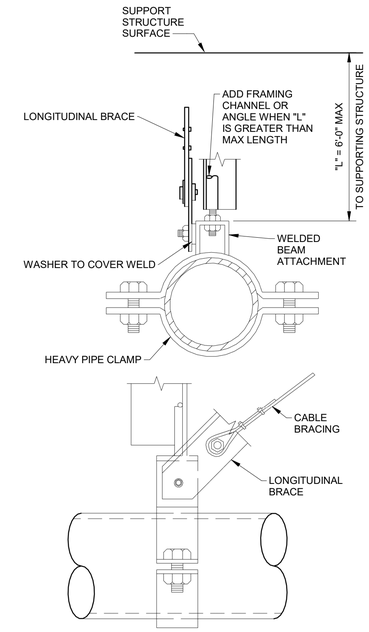

NOTE:
1. REFERENCE SMACNA SEISMIC SUPPORT MANUAL FIGURE 4-19.

C4 LONGITUDINAL CABLE BRACING FOR PIPES
NOT TO SCALE

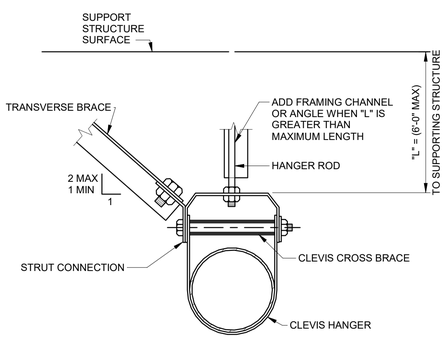

NOTE:
1. REVERENCE SMACNA SEISMIC SUPPORT MANUAL FIGURE 4-13.

A1 TRANSVERSE BRACING FOR PIPES
NOT TO SCALE

SYM	DESCRIPTION	DATE	APPR

NAVFAC

LICENSED PROFESSIONAL ENGINEER
JITENDRA VALMIK
062-072817
STATE OF ILLINOIS
EXP: 11/30/2027
SIGNED: 03/11/2026

ASMD LLC.
A/E INFO

APPROVED
FOR COMMANDER NAVFAC

ACTIVITY
NATHANIEL PYRON, MILCON PLANNER, DPPH

SATISFACTORY TO DATE 3/10/2026

DES	DRW	CHK
JV	AS	AP

PM/DM	DKS/DMK
BRANCH MANAGER	KYM
CHIEF ENG/ARCH	KYM
FIRE PROTECTION	RYO

DEPARTMENT OF THE NAVY
NAVAL FACILITIES ENGINEERING SYSTEMS COMMAND
NAVFAC PACIFIC
U.S. NAVSUPPACT

NAVAL FACILITIES ENGINEERING SYSTEMS COMMAND ~ PACIFIC
MAKALAPA, HAWAII

MCB CAMP BLAZ, GUAM

JFY 2022 PROJECT J-875
BATTLE STAFF TRAINING FACILITY

HVAC DETAILS - SHEET 6

SCALE: NTS
EPROJECT NO.: 1696746
CONSTR. CONTR. NO.
NAVFAC DRAWING NO. 17322116
SHEET 276 OF 468

MH506

DRAWFORM REVISION: 25 AUGUST 2020

3/11/2026 4:37:03 PM MH506
C:\REVIT_2024_PROJECT_FILES\BLDG-J-875-1696746-M_7542_Jon_Koenig.rvt

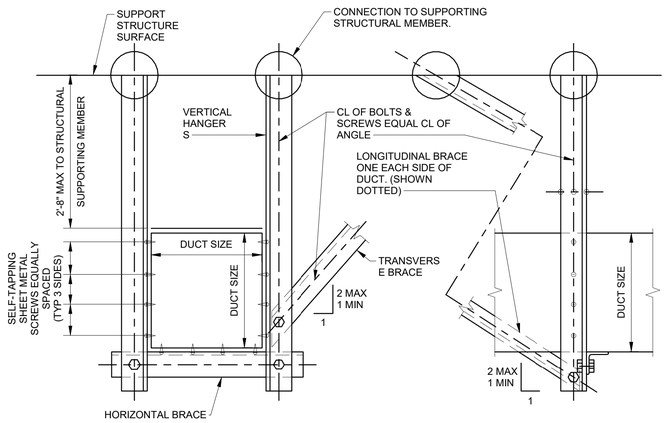

NOTES:
1. REFERENCE SMACNA SEISMIC RESTRAINT MANUAL FIGURE 4-2.

C1 STRUT SIDE BRACING FOR RECTANGULAR DUCTS (TYPE A)

NOT TO SCALE

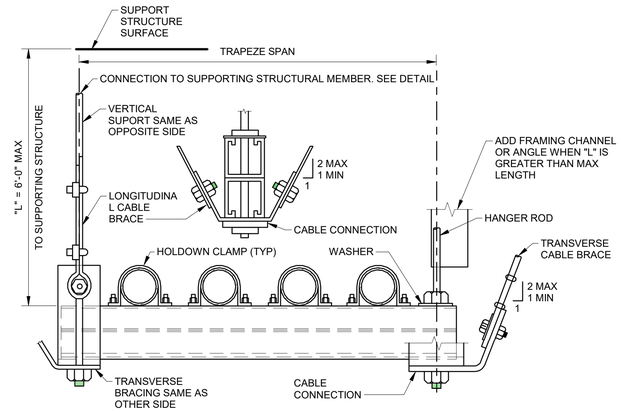

NOTE:
1. REFERENCE SMACNA SEISMIC SUPPORT MANUAL FIGURE 4-21.

C3 CABLE BRACING FOR PIPE TRAPEZE

NOT TO SCALE

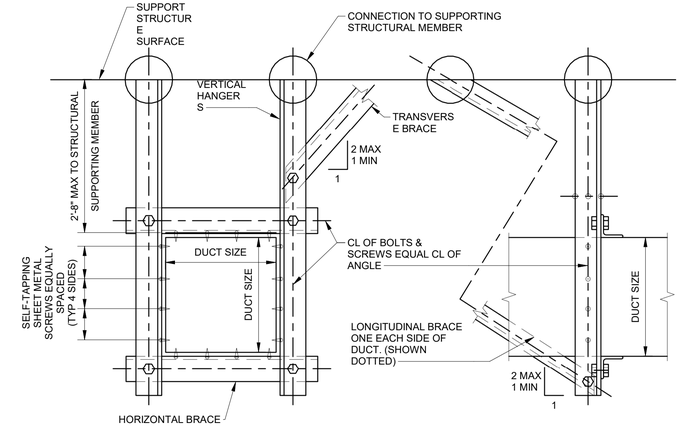

NOTES:
1. REFERENCE SMACNA SEISMIC RESTRAINT MANUAL FIGURE 4-3.

C4 STRUT SIDE BRACING FOR RECTANGULAR DUCTS (TYPE B)

NOT TO SCALE

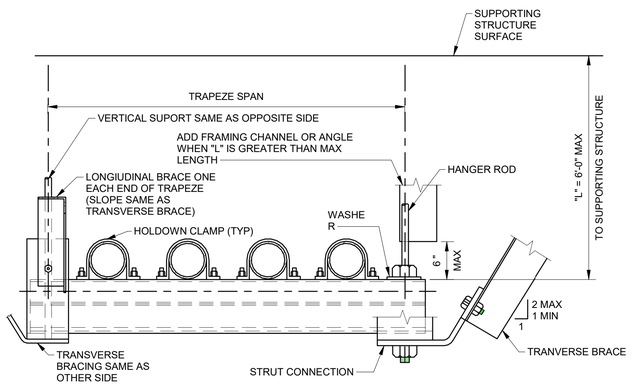

NOTE:
1. REFERENCE SMACNA SEISMIC SUPPORT MANUAL FIGURE 4-20.

B1 STRUT BRACING FOR PIPE TRAPEZE

NOT TO SCALE

SYM	DESCRIPTION	DATE	APPR

NAVFAC

LICENSED PROFESSIONAL ENGINEER JITENDRA VALMIK 062-072817 STATE OF ILLINOIS
EXP: 11/30/2027
SIGNED: 03/11/2026 M.A.

ASMD LLC. AE INFO

APPROVED

FOR COMMANDER NAVFAC

ACTIVITY
NATHANIEL PYRON, MILCON PLANNER, DPPH

SATISFACTORY TO DATE 3/10/2026

DES	JV	DRW	AS	CHK	AP

PMDM	DKS/DMK
BRANCH MANAGER	KYM
CHIEF ENG/ARCH	KYM
FIRE PROTECTION	RYO

DEPARTMENT OF THE NAVY
NAVFAC PACIFIC
NAVAL FACILITIES ENGINEERING SYSTEMS COMMAND
NAVAL FACILITIES ENGINEERING SYSTEMS COMMAND ~ PACIFIC
MAKALAPA, HAWAII
U.S. NAVSUPPACT
MCB CAMP BLAZ, GUAM

JFY 2022 PROJECT J-875
BATTLE STAFF TRAINING FACILITY

HVAC DETAILS - SHEET 7

SCALE: NTS
EPROJECT NO.: 1696746
CONSTR. CONTR. NO.
NAVFAC DRAWING NO. 17322117
SHEET 277 OF 468

MH507

DRAWFORM REVISION: 25 AUGUST 2020

3/11/2026 4:37:09 PM MH507
C:\REVIT_2024_PROJECT_FILES\BLDG-J-875-1696746-M_7542_Jon_Koenig.rvt

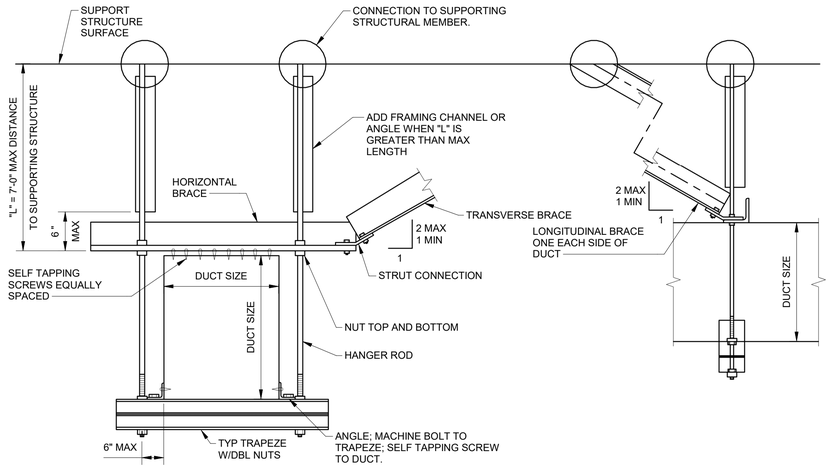

NOTES:
1. REFERENCE SMACNA SEISMIC RESTRAINT MANUAL FIGURE 4-5.

C1 STRUT SIDE BRACING FOR RECTANGULAR DUCTS (TYPE C)

NOT TO SCALE

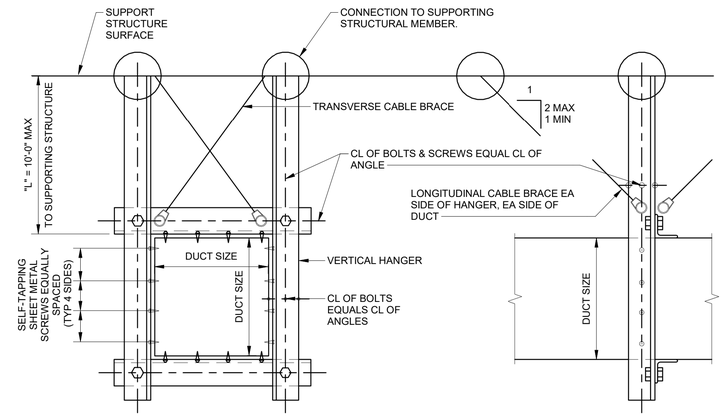

NOTES:
1. REFERENCE SMACNA SEISMIC RESTRAINT MANUAL FIGURE 4-7.

C3 CABLE CENTER BRACING FOR RECTANGULAR DUCTS

NOT TO SCALE

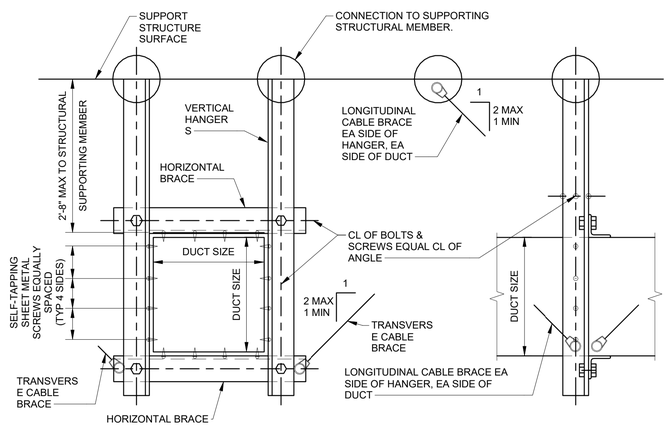

NOTES:
1. REFERENCE SMACNA SEISMIC RESTRAINT MANUAL FIGURE 4-4.

B1 CABLE SIDE BRACING FOR RECTANGULAR DUCTS

NOT TO SCALE

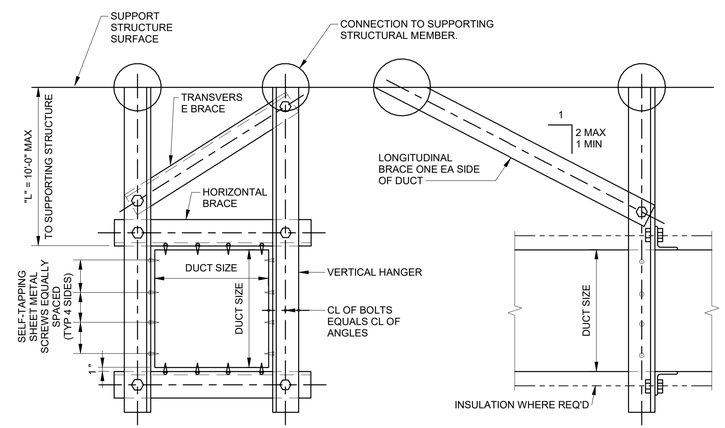

NOTES:
1. REFERENCE SMACNA SEISMIC RESTRAINT MANUAL FIGURE 4-6.

B3 STRUT CENTER BRACING FOR RECTANGULAR DUCTS

NOT TO SCALE

SYM	DESCRIPTION	DATE	APPR

NAVFAC

LICENSED PROFESSIONAL ENGINEER
JITENDRA VALMIK
062-072817
STATE OF ILLINOIS
EXP: 11/30/2027
SIGNED: 03/11/2026 M.A.

ASMD LLC.
AE INFO

APPROVED
FOR COMMANDER NAVFAC
ACTIVITY
NATHANIEL PYRON, MILCON PLANNER, DPPH
SATISFACTORY TO DATE 3/10/2026

DES	JV	DRW AS	CHK AP
PM/DM			DKS/DMK
BRANCH MANAGER			KYM
CHIEF ENG/ARCH			KYM
FIRE PROTECTION			RYO

DEPARTMENT OF THE NAVY
NAVFAC PACIFIC
NAVAL FACILITIES ENGINEERING SYSTEMS COMMAND ~ PACIFIC
NAVAL FACILITIES ENGINEERING SYSTEMS COMMAND
MAKALAPA, HAWAII
U.S. NAVSUPPACT
MCB CAMP BLAZ, GUAM
JFY 2022 PROJECT J-875
BATTLE STAFF TRAINING FACILITY
HVAC DETAILS - SHEET 8

SCALE: NTS
EPROJECT NO.: 1696746
CONSTR. CONTR. NO.
NAVFAC DRAWING NO.
17322118
SHEET 278 OF 468
MH508

DRAWFORM REVISION: 25 AUGUST 2020

3/11/2026 4:37:09 PM MH508
C:\REVIT_2024_PROJECT_FILES\BLDG-J875-1696746-M_7542_Jon_Koenig.rvt

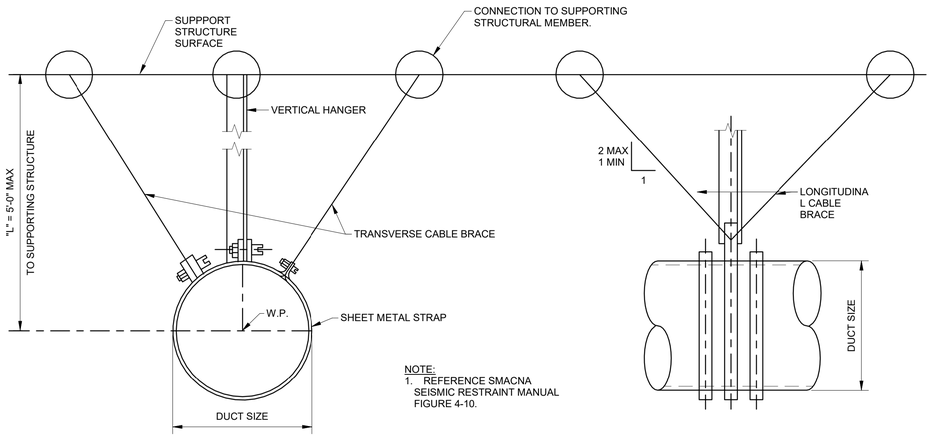

NOTE:
1. REFERENCE SMACNA SEISMIC RESTRAINT MANUAL FIGURE 4-10.

C1 SINGLE HANGER CABLE BRACING FOR ROUND DUCTS 33-36 INCHES

NOT TO SCALE

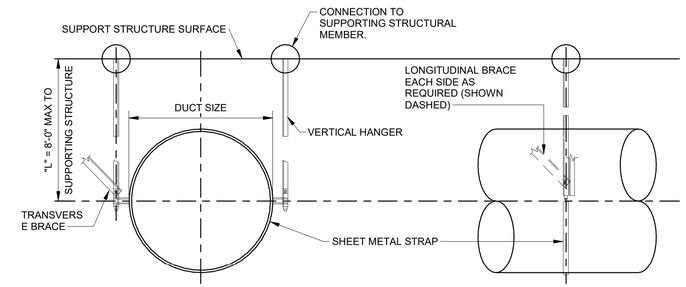

NOTE:
1. REFERENCE SMACNA SEISMIC RESTRAINT MANUAL FIGURE 4-11.

C3 DOUBLE HANGER STRUT BRACING FOR ROUND DUCTS UP TO 84 INCHES

NOT TO SCALE

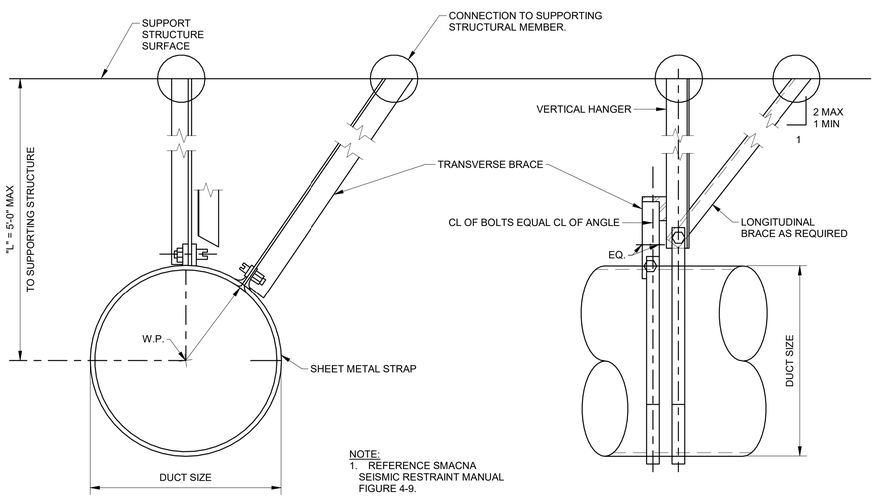

NOTE:
1. REFERENCE SMACNA SEISMIC RESTRAINT MANUAL FIGURE 4-9.

B1 SINGLE HANGER STRUT BRACING FOR ROUND DUCTS 33-36 INCHES

NOT TO SCALE

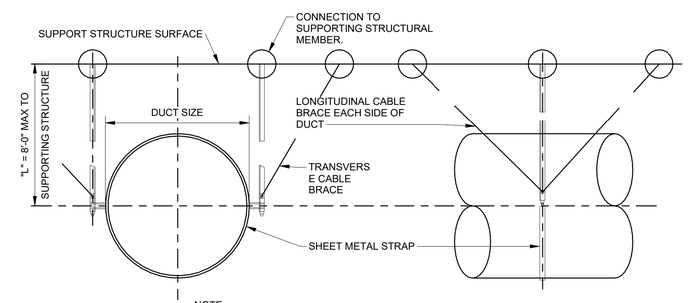

NOTE:
1. REFERENCE SMACNA SEISMIC RESTRAINT MANUAL FIGURE 4-12.

B3 DOUBLE HANGER CABLE BRACING FOR ROUND DUCTS UP TO 84 INCHES

NOT TO SCALE

SYM	DESCRIPTION	DATE	APPR

NAVFAC

LICENSED PROFESSIONAL ENGINEER
JITENDRA VALMIK
062-072817
OF ILLINOIS
EXP: 11/30/2027
SIGNED: 03/11/2026 M.A.

ASMD LLC.
A/E INFO

APPROVED
FOR COMMANDER NAVFAC
ACTIVITY
NATHANIEL PYRON, MILCON PLANNER, DPPH
SATISFACTORY TO DATE 3/10/2026
DES JV DRW AS CHK AP
PM/DM DKS/DMK
BRANCH MANAGER KYM
CHIEF ENG/ARCH KYM
FIRE PROTECTION RYO

DEPARTMENT OF THE NAVY
NAVFAC PACIFIC
NAVAL FACILITIES ENGINEERING SYSTEMS COMMAND
NAVAL FACILITIES ENGINEERING SYSTEMS COMMAND ~ PACIFIC
MAKALAPA, HAWAII
U.S. NAVSUPPACT
MCB CAMP BLAZ, GUAM
JFY 2022 PROJECT J-875
BATTLE STAFF TRAINING FACILITY
HVAC DETAILS - SHEET 9

SCALE: NTS
EPROJECT NO.: 1696746
CONSTR. CONTR. NO.
NAVFAC DRAWING NO. 17322119
SHEET 279 OF 468
MH509

DRAWFORM REVISION: 25 AUGUST 2020

3/11/2026 4:37:12 PM MH509
C:\REVIT_2024_PROJECT_FILES\BLDG-J-875-1696746-M_7542_Jon_Koenig.rvt

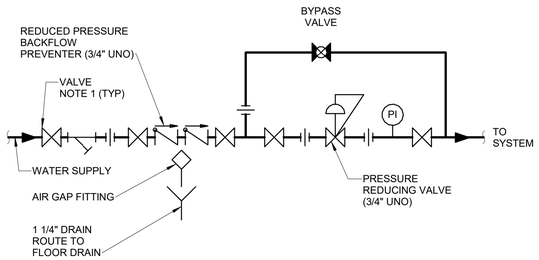

NOTES:

1. PROVIDE VALVE TYPES AS SPECIFIED FOR FLUID SERVICE INDICATED.

C1 WATER INLET VALVE PIPING

SCALE: NONE

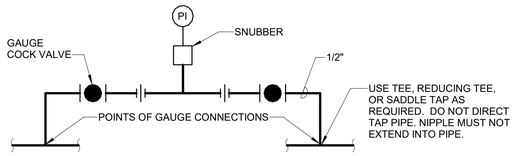

C2 DOUBLE GAUGE (DG) CONNECTION

SCALE: NONE

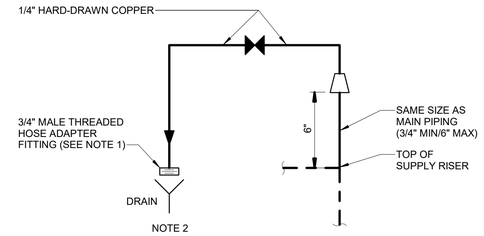

NOTES:

1. PROVIDE HOSE ADAPTER FITTING AND HOSE CONNECTION VACUUM BREAKER FOR VENTS LOCATED IN FINISHED SPACES OR WHERE INDICATED.
2. EXTEND VENT TO DRAIN WITH MINIMUM OF 2" AIR GAP IN ACCORDANCE WITH LOCAL PLUMBING CODE IN MECHANICAL ROOMS AND UNFINISHED AREAS.

C4 MANUAL AIR VENT (MV)

SCALE: NONE

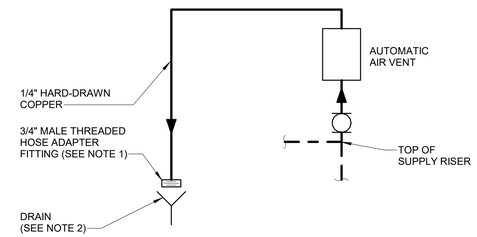

NOTES:

1. PROVIDE HOSE ADAPTER FITTING AND HOSE CONNECTION VACUUM BREAKER FOR VENTS LOCATED IN FINISHED SPACES OR WHERE INDICATED.
2. EXTEND VENT TO DRAIN WITH MINIMUM OF 2" AIR GAP IN ACCORDANCE WITH LOCAL PLUMBING CODE IN MECHANICAL ROOMS AND UNFINISHED AREAS.

C5 AUTOMATIC AIR VENT (AV)

SCALE: NONE

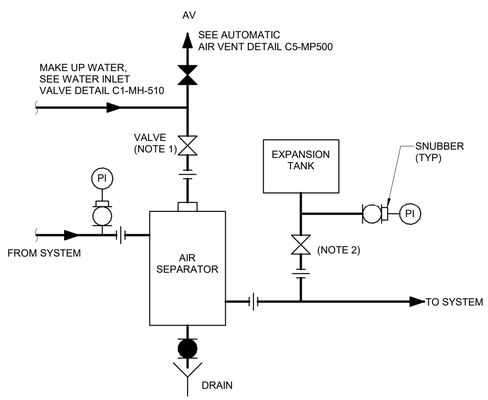

NOTES:

1. PROVIDE VALVE TYPES AS SPECIFIED FOR FLUID SERVICE INDICATED.
2. PROVIDE LOCKABLE VALVE. LOCK VALVE IN OPEN POSITION.

A1 AIR SEPARATOR WITH EXPANSION TANK PIPING

SCALE: NONE

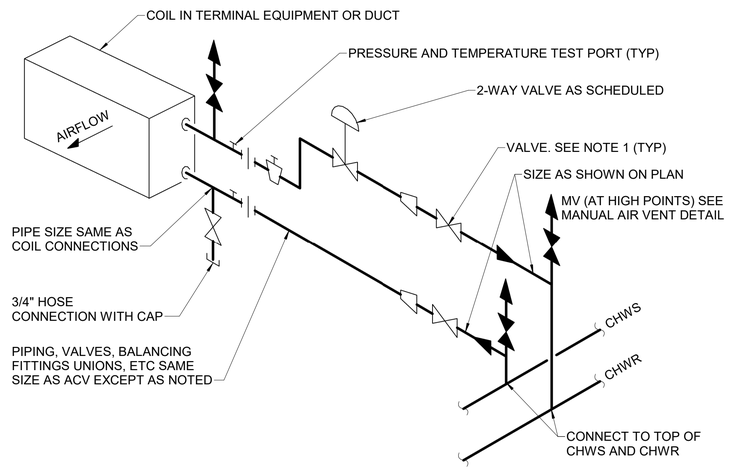

NOTES:

1. PROVIDE VALVE TYPES AS SPECIFIED FOR FLUID SERVICE INDICATED.

A2 CHILLED WATER PIPING CONNECTIONS TO COILS IN FCU/ BCHD UNITS

NOT TO SCALE

SYM	DESCRIPTION	DATE	APPR

NAVFAC

LICENSED PROFESSIONAL ENGINEER JITENDRA VALMIK 062-072817 STATE OF ILLINOIS

EXP: 11/30/2027
SIGNED: 03/11/2026 M.A.

ASMD LLC. A/E INFO

APPROVED

FOR COMMANDER NAVFAC

ACTIVITY: NATHANIEL PYRON, MILCON PLANNER, DPPH

SATISFACTORY TO DATE 3/10/2026

DES JV | DRW AS | CHK AP

PM/DM DKS/DMK

BRANCH MANAGER KYM

CHIEF ENG/ARCH KYM

FIRE PROTECTION RYO

DEPARTMENT OF THE NAVY
NAVAL FACILITIES ENGINEERING SYSTEMS COMMAND ~ PACIFIC
NAVFAC PACIFIC
U.S. NAVSUPPACT

NAVAL FACILITIES ENGINEERING SYSTEMS COMMAND
MAKALAPA, HAWAII

MCB CAMP BLAZ, GUAM

JFY 2022 PROJECT J-875
BATTLE STAFF TRAINING FACILITY

HVAC DETAILS - SHEET 10

SCALE: NTS

EPROJECT NO.: 1696746

CONSTR. CONTR. NO.

NAVFAC DRAWING NO. 17322120

SHEET 280 OF 468

MH510

DRAWFORM REVISION: 25 AUGUST 2020

3/11/2026 4:37:14 PM MH510
C:\REVIT_2024_PROJECT_FILES\BLDG-J-875-1696746-M_7542_Jon_Koenig.rvt

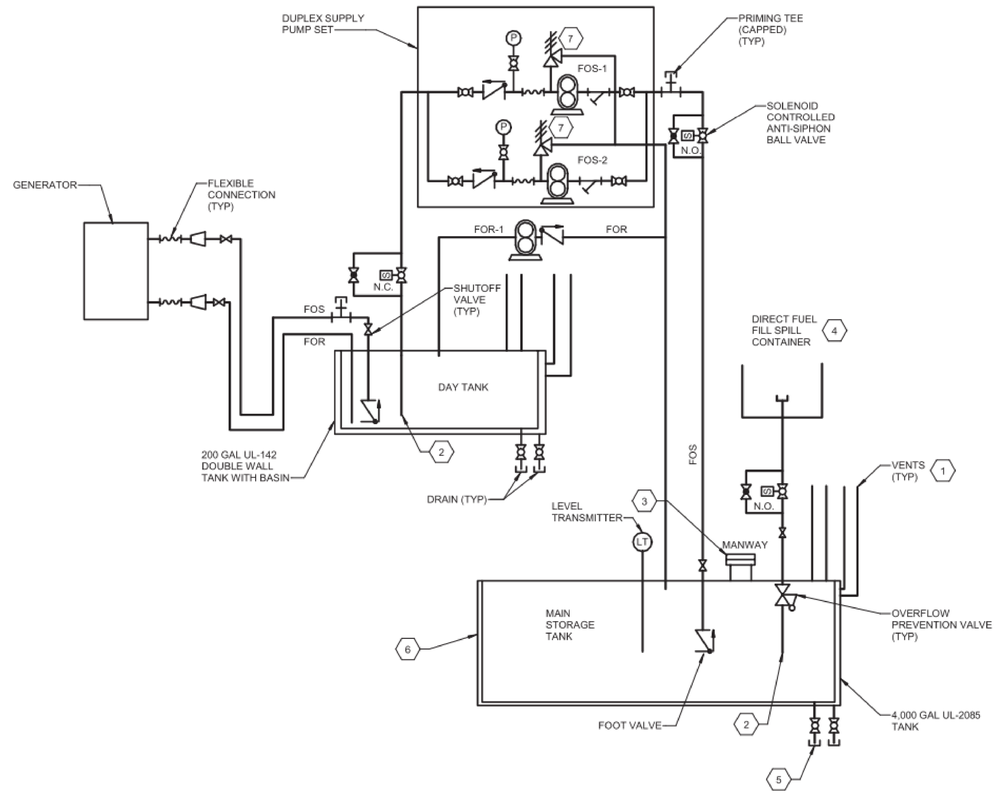

B2 FUEL OIL SYSTEM - PIPING DIAGRAM

NOT TO SCALE

PART OF OPTION ITEM #2

KEYNOTES:

1. EXTEND VENT LINES 12'-0" (3.6M) MINIMUM ABOVE ADJACENT GROUND LEVEL. PROVIDE VENTS AS REQUIRED PER CODE. SIZE PER NFPA 30.
2. FILL PIPE SHALL TERMINATE AT 6" (150MM) OF THE BOTTOM OF THE TANK.
3. PROVIDE MANWAYS AS REQUIRED PER CODE AND RECOMMENDED BY MANUFACTURER. SEE UFC 3-460-01 FOR MANHOLE AND LADDER REQUIREMENTS INCLUDING PROVIDING A MINIMUM OF TWO 36" MANHOLES FOR TANKS LARGER THAN 5000 GALLONS.
4. PROVIDE WEATHERPROOF, LOCKABLE BOX WITH 7 GAL (MIN) CAPACITY SUMP. SPILL CONTAINER SHALL BE COMPLETE WITH QUICK DISCONNECT COUPLING, DUST CAP, CHECK VALVE, SHUTOFF VALVE, AND HAND PUMP TO DRAIN SUMP AREA. PROVIDE AUDIBLE AND VISUAL ALARM WHEN THE TANK REACHES "FULL" LEVEL.
5. PROVIDE TANK LOW POINT DRAIN OR DIPTUBE AND HAND PUMP.
6. PROVIDE AN EXTERNAL LADDER AND PLATFORM WITH SAFETY RAILING FOR GAUGING AND SAMPLING IN ACCORDANCE WITH 29 CFR PART 1910.23.
7. PROVIDE RELIEF VALVE RETUNED TO MAIN STORAGE TANK.

SYM	DESCRIPTION	DATE	APPR

NAVFAC

LICENSED PROFESSIONAL ENGINEER
JITENDRA VALMIK
062-072817
OF ILLINOIS
EXP: 11/30/2027
SIGNED: 03/11/2026 IKA

ASMD LLC.
A/E INFO

APPROVED
FOR COMMANDER NAVFAC
ACTIVITY
NATHANIEL PYRON, MILCON PLANNER, DPPH
SATISFACTORY TO DATE 3/10/2026
DES JV | DRW AS | CHK AP
PM/DM DKS/DMK
BRANCH MANAGER KYM
CHIEF ENG/ARCH KYM
FIRE PROTECTION RYO

DEPARTMENT OF THE NAVY
NAVFAC PACIFIC
U.S. NAVSUPPACT
NAVAL FACILITIES ENGINEERING SYSTEMS COMMAND
NAVAL FACILITIES ENGINEERING SYSTEMS COMMAND ~ PACIFIC
MAKALAPA, HAWAII
MCB CAMP BLAZ, GUAM
JFY 2022 PROJECT J-875
BATTLE STAFF TRAINING FACILITY
FUEL OIL SYSTEM DETAILS - SHEET 1

SCALE: NTS
EPROJECT NO.: 1696746
CONSTR. CONTR. NO.
NAVFAC DRAWING NO. 17322121
SHEET 281 OF 468
MH511

DRAWFORM REVISION: 25 AUGUST 2020

3/11/2026 4:37:17 PM MH511
C:\REVIT_2024_PROJECT_FILES\BLDG-J875-1696746-M_7542_Jon_Koenig.rvt

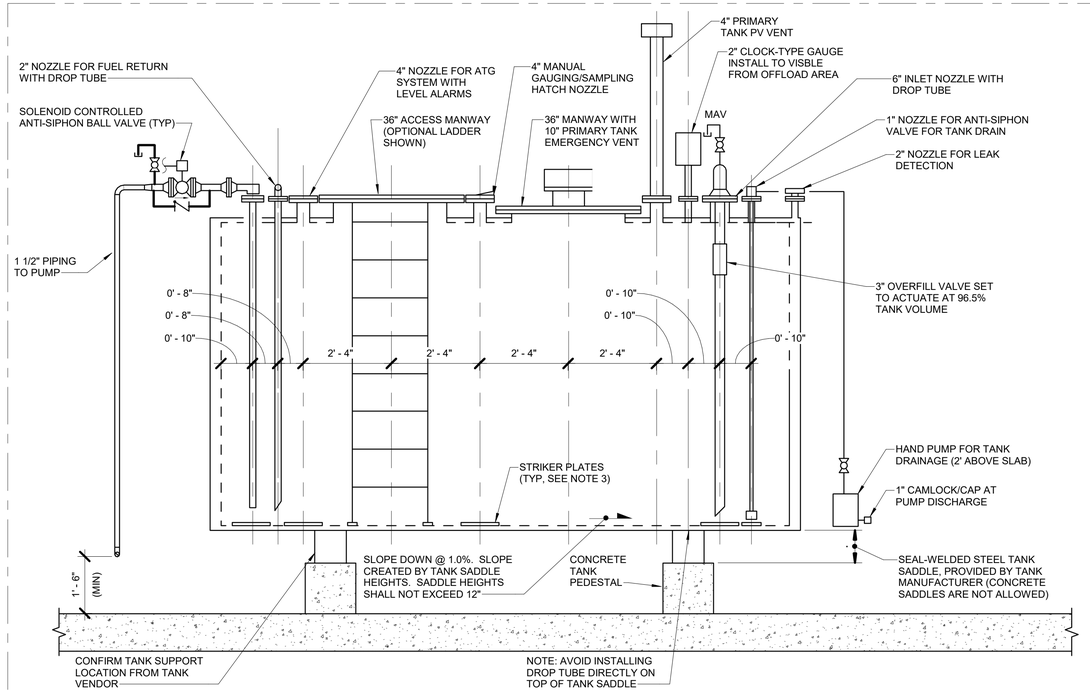

C1 FUEL OIL SYSTEM - ABOVEGROUND MAIN STORAGE TANK SECTION

NOT TO SCALE

NOTES:

1. TANKS SHALL HAVE PLATFORM W/ RAILING FOR ACCESS TO APPURTENANCES ON TOP OF TANK.
2. PROVIDE BONDING / GROUNDING OF ALL PIPING TANKS AND EQUPIMENT.
3. STRIKER PLATES UNDER THE ATG & GAUGING HATCH SHALL BE FLAT. ALL OTHER STRIKER PLATES CAN BE CURVED TO MATCH THE TANK GEOMETRY. THE FLAT PLATES SHALL BE SEALED TO PREVENT MATERIAL BUILD UP UNDER THE PLATE.
4. TANK PLATFORM, INTER-CONNECTING PLATFORMS, RAILINGS AND LADDER SHALL BE DESIGNED, COORDINATED AND PROVIDED BY THE TANK MANUFACTURER, UTLIIZING APPROXIMATE COVERAGE OF FULL TANK.
5. PLATFORM GRATING SHALL BE UV RESISTANT FRP MATERIAL.
6. PLATFORM FRAME & HANDRAILS SHALL BE GALVANIZED STEEL.
7. PROVIDE CUT-OUTS IN PLATFORM GRATING FOR TANK NOZZLES AND APPURTENANCES ON TOP OF TANK.
8. PLATFORMS AND GRATING SHALL BE DESIGNED FOR A MIMNIMUM OF 100 PSF LIVE LOADS.
9. CONFIRM TANK DIMENSIONS, NOZZLE LOCATION, AND SADDLE SPACING WITH TANK MANUFACTURER.

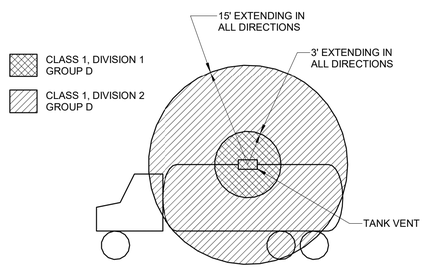

B1 FUEL TRUCK HAZARDOUS AREA

SCALE: NONE

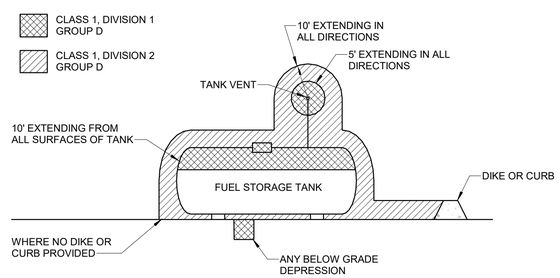

B2 FUEL STORAGE TANK HAZARDOUS AREA

SCALE: NONE

PART OF OPTION ITEM #2

SYM	DESCRIPTION	DATE	APPR

NAVFAC

LICENSED PROFESSIONAL ENGINEER JITENDRA VALMIK 062-072817 OF ILLINOIS

EXP: 11/30/2027
SIGNED: 03/11/2026

ASMD LLC.

APPROVED

FOR COMMANDER NAVFAC

ACTIVITY
NATHANIEL PYRON, MILCON PLANNER, DPPH

SATISFACTORY TO DATE 3/10/2026

DES JV | DRW AS | CHK AP

PM/DM DKS/DMK
BRANCH MANAGER KYM
CHIEF ENG/ARCH KYM
FIRE PROTECTION RYO

DEPARTMENT OF THE NAVY
NAVFAC PACIFIC
NAVAL FACILITIES ENGINEERING SYSTEMS COMMAND
NAVAL FACILITIES ENGINEERING SYSTEMS COMMAND ~ PACIFIC
MAKALAPA, HAWAII
U.S. NAVSUPPACT
MCB CAMP BLAZ, GUAM
JFY 2022 PROJECT J-875
BATTLE STAFF TRAINING FACILITY
FUEL OIL SYSTEM DETAILS - SHEET 2

SCALE: NTS
EPROJECT NO.: 1696746
CONSTR. CONTR. NO.
NAVFAC DRAWING NO. 17322122
SHEET 282 OF 468

MH512

DRAWFORM REVISION: 25 AUGUST 2020

3/11/2026 4:37:20 PM MH512
C:\REVIT_2024_PROJECT_FILES\BLDG-J-875-1696746-M_7542_Jon_Koenig.rvt

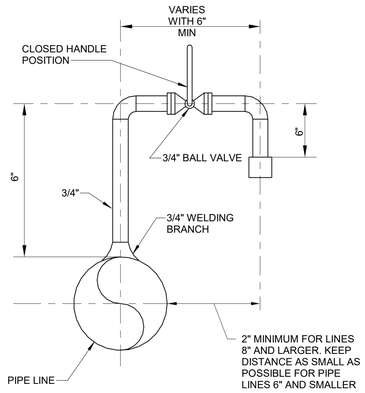

NOTE: PIPING MATERIALS TO MATCH CARRIER PIPE

C1 MANUAL AIR VENT

Scale: NTS

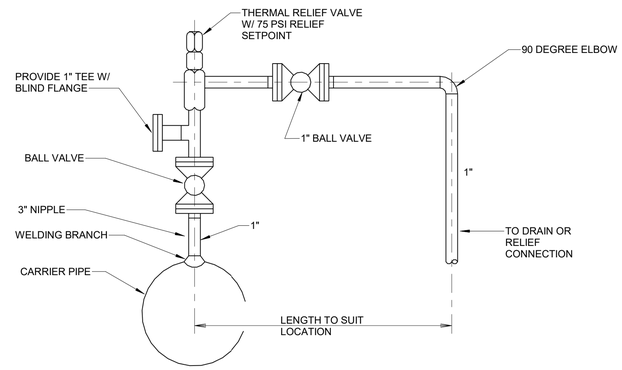

C2 THERMAL RELIEF VALVE ASSEMBLY

Scale: NTS

NOTES:

1. ALL PIPING JOINTS SHALL BE WELDED. BALL VALVES AND RELIEF VALVE SHALL BE FLANGED.
2. TRV PIPING AND COMPONENT MATERIAL SHALL MATCH CARRIER PIPE MATERIAL.
3. VALVES SHALL BE SECURED IN THE OPEN POSITION.
4. INSTALL THERMAL RELIEF VALVE IN VERTICAL POSITION.

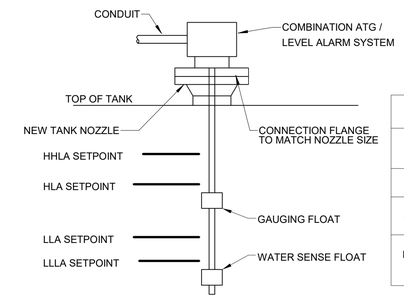

LEVEL ALARM HEIGHT				
	RISING LEVEL ACTUATOR POINT		FALLING LEVEL ACTUATOR POINT	
	HLA	HHLA	LLA	LLLA
ALL TANKS	95% VOLUME	98% VOLUME	15% VOLUME	AT MINIMUM SUPPLY PUMP SUBMERGENCE LEVEL
SYSTEM RESPONSE	ACTIVATES AUDIBLE AND VISUAL ALARM AT TRUCK OFFLOAD	ACTIVATES AUDIBLE AND VISUAL ALARM	ACTIVATES AUDIBLE AND VISUAL ALARM	SHUTS DOWN FUEL OIL SUPPLY PUMP

C4 TANK LEVEL ALARM

Scale: NTS

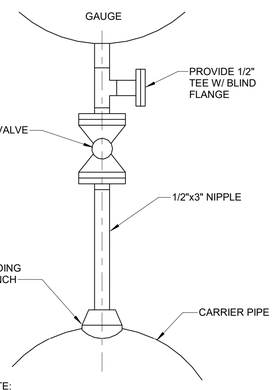

NOTE:

1. GAUGE PIPING AND COMPONENT MATERIAL SHALL MATCH CARRIER PIPE MATERIAL.

B1 PRESSURE GAUGE PIPE CONNECTION

Scale: NTS

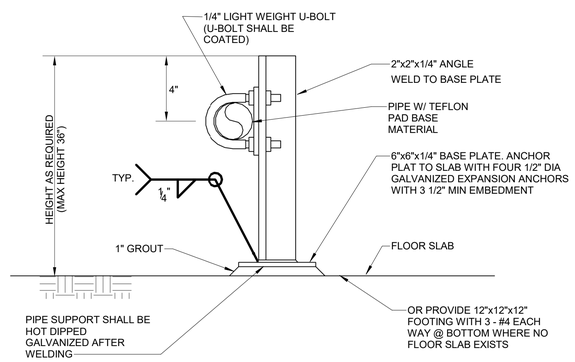

B2 PIPE SUPPORT FOR 3/4" TO 2" PIPE

Scale: NTS

MAXIMUM PIPE SUPPORT SPACING:
3/4" PIPE - 6'; 1" PIPE - 7'; 1-1/2" PIPE - 9'; 2" PIPE - 10'

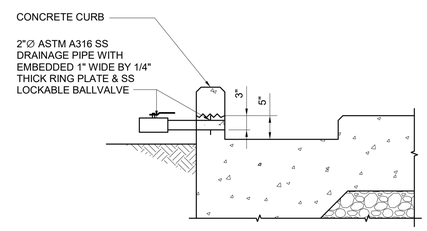

B3 CONCRETE CURB SECTION

SCALE: NONE

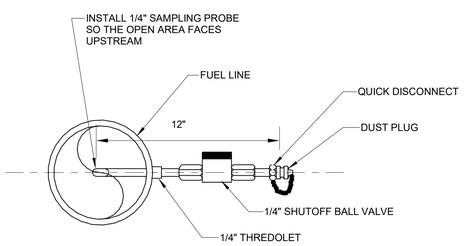

NOTES:

1. INSTALLER TO PAY CLOSE ATTENTION TO DIRECTIONAL ARROW TO AVOID INCORRECT INSTALLATION OF SAMPLE PROBE

A1 SAMPLE CONNECTION

Scale: NTS

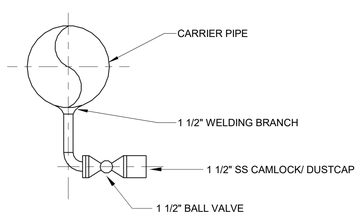

NOTES:

1. LPD PIPING AND COMPONENT MATERIAL SHALL MATCH CARRIER PIPE MATERIAL.

A2 LOW POINT DRAIN

Scale: NTS

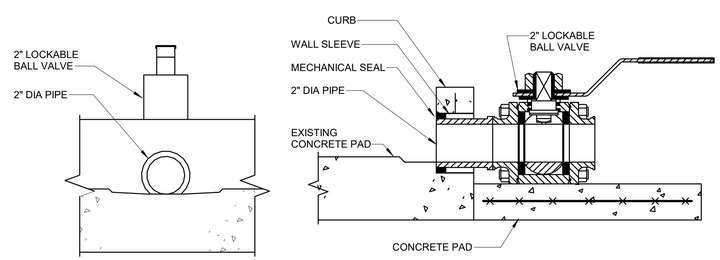

ELEVATION **SECTION**

NOTES:

1. THE 2" LOCKABLE BALL VALVE SHALL BE IN ACCORDANCE WITH AMERICAN WATER WORKS ASSOCIATION SPEC C-500.

PART OF OPTION ITEM #2

A3 LOCKABLE BALL VALVE

SCALE: NONE

SYM	DESCRIPTION	DATE	APPR

NAVFAC

LICENSED PROFESSIONAL ENGINEER JITENDRA VALMIK 062-072817 STATE OF ILLINOIS

EXP: 11/30/2027
SIGNED: 03/11/2026

ASMD LLC.

APPROVED

FOR COMMANDER NAVFAC

ACTIVITY: NATHANIEL PYRON, MILCON PLANNER, DPPH

SATISFACTORY TO DATE 3/10/2026

DES JV | DRW AS | CHK AP

PM/DM DKS/DMK

BRANCH MANAGER KYM

CHIEF ENG/ARCH KYM

FIRE PROTECTION RYO

DEPARTMENT OF THE NAVY
NAVFAC PACIFIC
NAVAL FACILITIES ENGINEERING SYSTEMS COMMAND
NAVAL FACILITIES ENGINEERING SYSTEMS COMMAND ~ PACIFIC
MAKALAPA, HAWAII
U.S. NAVSUPPACT
MCB CAMP BLAZ, GUAM

JFY 2022 PROJECT J-875
BATTLE STAFF TRAINING FACILITY

FUEL OIL SYSTEM DETAILS - SHEET 3

SCALE: NTS

EPROJECT NO.: 1696746

CONSTR. CONTR. NO.

NAVFAC DRAWING NO. 17322123

SHEET 283 OF 468

MH513

DRAWFORM REVISION: 25 AUGUST 2020

3/11/2026 4:37:23 PM MH513
C:\REVIT_2024_PROJECT_FILES\BLDG-J-875-1696746-M_7542_Jon_Koenig.rvt

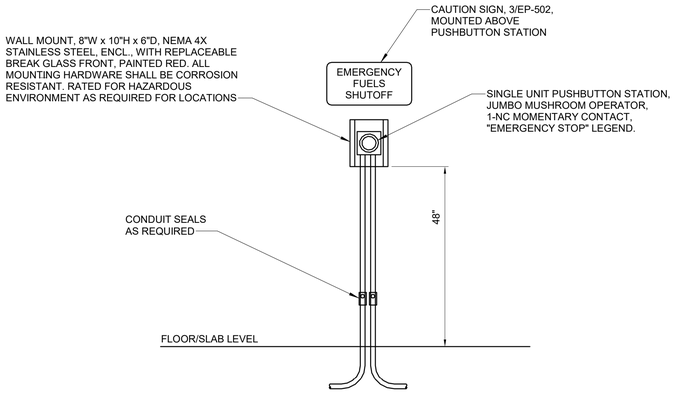

C1 WALL MOUNT EMERGENCY FUELS SHUTOFF STATION (EFSO) DETAIL

SCALE: NONE

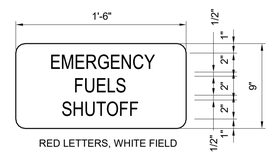

C2 CAUTION SIGN DETAIL

SCALE: NONE

NOTES:

1. ACTIVATION OF ANY EFSO STATION SHALL DISCONNECT POWER TO ALL FUELING OPERATIONS.

PART OF OPTION ITEM #2

SYM	DESCRIPTION	DATE	APPR

NAVFAC

LICENSED PROFESSIONAL ENGINEER JITENDRA VALMIK 062-072817 OF ILLINOIS

EXP: 11/30/2027
SIGNED: 03/11/2026 M.A.

ASMD LLC. A/E INFO

APPROVED

FOR COMMANDER NAVFAC

ACTIVITY: NATHANIEL PYRON, MILCON PLANNER, DPPH

SATISFACTORY TO DATE: 3/10/2026

DES: JV | DRW: AS | CHK: AP

PM/DM: DKS/DMK

BRANCH MANAGER: KYM

CHIEF ENG/ARCH: KYM

FIRE PROTECTION: RYO

DEPARTMENT OF THE NAVY
NAVFAC PACIFIC
NAVAL FACILITIES ENGINEERING SYSTEMS COMMAND
NAVAL FACILITIES ENGINEERING SYSTEMS COMMAND ~ PACIFIC
MAKALAPA, HAWAII

U.S. NAVSUPPACT
MCB CAMP BLAZ, GUAM

JFY 2022 PROJECT J-875
BATTLE STAFF TRAINING FACILITY

FUEL OIL SYSTEM DETAILS - SHEET 4

SCALE: NTS

EPROJECT NO.: 1696746

CONSTR. CONTR. NO.

NAVFAC DRAWING NO. 17322124

SHEET 284 OF 468

MH514

DRAWFORM REVISION: 25 AUGUST 2020

3/11/2026 4:37:25 PM MH514
C:\REVIT_2024_PROJECT_FILES\BLDG-J-875-1696746-M_7542_Jon_Koenig.rvt

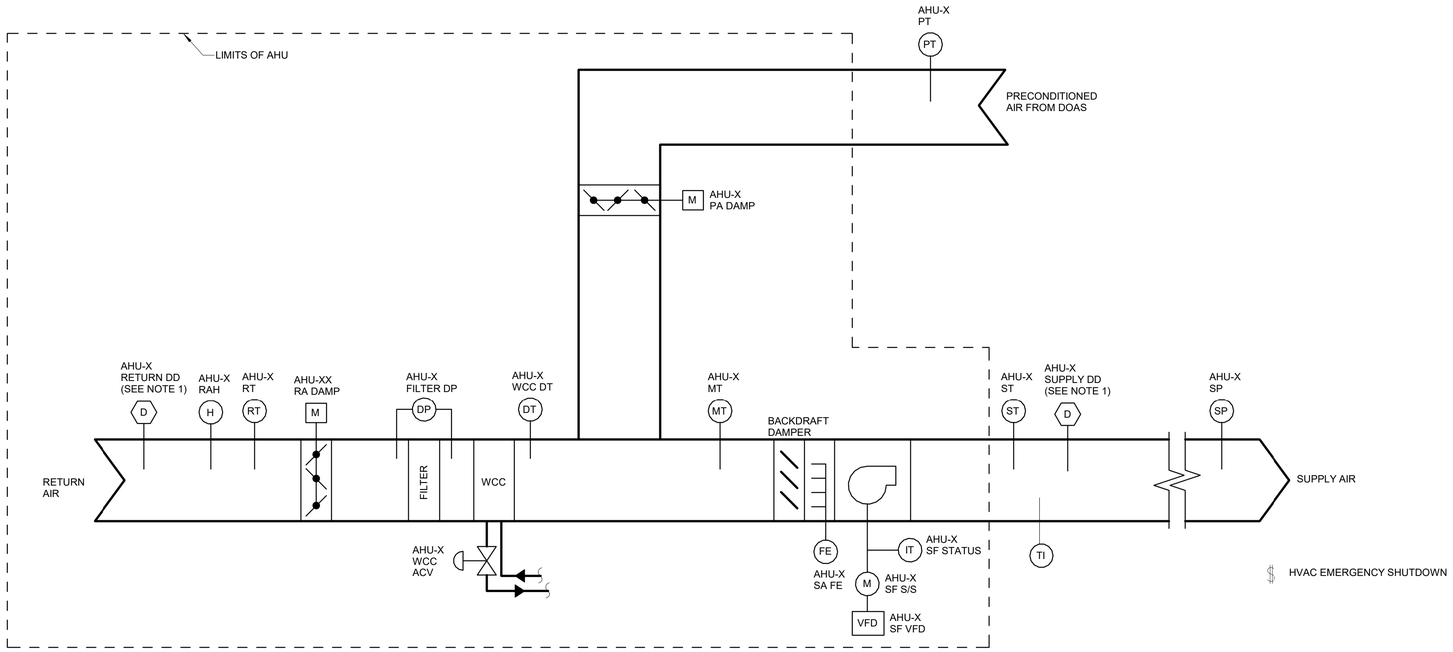

NOTES:
1. DUCT DETECTOR TO BE WIRED TO FIRE ALARM SYSTEM AS REQUIRED.

SEQUENCE OF OPERATION:

GENERAL REQUIREMENTS

1. HVAC SYSTEMS SHALL BE CONTROLLED BY UNIT MOUNTED STAND ALONE DIRECT DIGITAL CONTROLLER, UNLESS NOTED OTHERWISE. CONTROLLERS SHALL BE INTEGRATED INTO BUILDING DIRECT DIGITAL CONTROL (DDC) SYSTEM FOR REMOTE CONTROL AND MONITORING. DDC SYSTEM COMMUNICATION SHALL BE AS SPECIFIED. PROVIDE LOCAL DISPLAY PANEL (LDP).

2. SET POINTS LABELED AS ADJUSTABLE SHALL BE FULLY ADJUSTABLE FROM OPERATOR WORKSTATIONS. SET POINTS FOR THERMOSTATS WITH INTEGRAL SET POINT ADJUSTMENT SHALL BE ADJUSTABLE FROM BOTH THE THERMOSTAT AND THE OPERATOR WORKSTATION. SET POINT ADJUSTMENT SHALL NOT REQUIRE PROGRAMMING OF DDC PANELS. ALL SETPOINTS, TIMERS, DEADBANDS, ETC., LISTED IN SEQUENCES SHALL BE ADJUSTABLE BY THE USER WHETHER INDICATED AS ADJUSTABLE IN SEQUENCE OR NOT. SOFTWARE POINTS SHALL BE USED FOR THESE POINTS.

3. ALARM REPORTING SHALL BE DONE AT PANEL ASSOCIATED WITH EQUIPMENT AND SHALL BE AVAILABLE AT OPERATOR WORK STATIONS.

4. PRECONDITIONED AIR DAMPERS SHALL BE CAPABLE OF AUTOMATICALLY SHUTTING OFF DURING PREOCCUPANCY BUILDING WARM-UP, COOL DOWN, SETUP, AND SETBACK PERIODS.

NORMAL CONTROL POSITIONS

1. NORMAL POSITIONS OF CONTROLLED DEVICES SHALL BE POSITION DEVICE RETURNS TO ON POWER FAILURE OR CONTROLLER FAILURE. NORMAL POSITIONS SHALL BE AS FOLLOWS.
   A. PRECONDITIONED AIR DAMPER: CLOSED
   B. RETURN AIR DAMPER: OPEN
   C. AUTOMATIC CONTROL VALVE (ACV) ON COOLING COILS: CLOSED TO COIL

VARIABLE AIR VOLUME AIR-HANDLING UNIT (AHU-X) CONTROL SEQUENCE

1. AHU SHALL BE CONTROLLED BY STAND ALONE DIRECT DIGITAL CONTROLLER.

2. SUPPLY FAN SHALL BE CONTROLLED BY OCCUPIED/UNOCCUPIED SCHEDULE FROM DDC SYSTEM. SEE AHU SCHEDULE FOR QUANTITY AND SUPPLY OF FANS AND VFDS.

3. FAN STATIC PRESSURE OPTIMIZATION: WHEN AHU-X IS SCHEDULED ON, SUPPLY FAN SHALL START AND RUN CONTINUOUSLY. ONCE AIRFLOW HAS BEEN PROVEN ON SUPPLY FAN, SUPPLY FAN VARIABLE FREQUENCY DRIVE SHALL MODULATE FAN SPEED TO MAINTAIN STATIC PRESSURE AT SET POINT. STATIC PRESSURE SHALL BE RESET BASED ON THE ZONE REQUIRING THE MOST STATIC PRESSURE (STATIC PRESSURE SHALL BE RESET LOWER UNTIL ONE ZONE DAMPER IS 90% OPEN). IF SUPPLY AIRFLOW IS NOT PROVEN FAN SHALL BE STOPPED, AND ALARM SHALL BE ACTIVATED.

4. OPTIMUM START: UNIT SHALL BE CAPABLE OF STARTING PRIOR TO SCHEDULED OCCUPANCY BASED ON THE TIME NECESSARY FOR ZONES TO REACH OCCUPIED SETPOINT TEMPERATURES. PRECONDITIONED AIR DAMPER SHALL REMAIN CLOSED AND RETURN DAMPER OPEN DURING OPTIMAL START PERIOD.

5. CHILLED WATER COOLING COIL CONTROL VALVE SHALL MODULATE TO MAINTAIN DISCHARGE AIR TEMPERATURE AT SET POINT 55° F/12.7° C (ADJUSTABLE).

6. SUPPLY AIR TEMPERATURE RESET CONTROLS: RESET SUPPLY AIR TEMPERATURE PROPORTIONALLY FROM 55 F/12.7 C (ADJUSTABLE) AT 75°F/23.9°C (ADJUSTABLE) RETURN AIR TEMPERATURE TO 62° F/16.7°C (ADJUSTABLE) AT 68°F/20.0°C RETURN AIR TEMPERATURE.

7. WHEN SYSTEM IS IN THE "UNOCCUPIED" MODE SYSTEM SHALL OPERATE AS SPECIFIED ABOVE EXCEPT THE PRECONDITIONED AIR DAMPER SHALL REMAIN CLOSED AND FAN SHALL CYCLE BASED ON DEMAND FROM SPACE VAV BOXES.

8. SAFETY SHUTDOWN: SAFETY SHUTDOWN CIRCUIT SHALL BE PROVIDED EXTERNAL TO SYSTEM CONTROLLER. CIRCUIT SHALL BE DIRECTLY CONNECTED TO STARTERS OF MOTOR-POWERED EQUIPMENT AND SHALL FUNCTION REGARDLESS OF STATUS OF SYSTEM CONTROLLER. IN EVENT OF SYSTEM SHUTDOWN, DEVICES SHALL RETURN TO NORMAL POSITION. CIRCUITS SHALL BE RESET MANUALLY. FOLLOWING SHALL COMPRISE SAFETY SHUT-DOWN CIRCUIT:
   A. HVAC EMERGENCY SHUTDOWN
   B. SPACE FIRE ALARM
   C. SMOKE DETECTION IN SUPPLY OR RETURN AIR DUCT

9. WHEN SYSTEM IS IN "PRESERVATION" MODE, SUPPLY FAN SHALL OPERATE AS SPECIFIED ABOVE FOR "OCCUPIED" MODE EXCEPT SUPPLY AIR TEMPERATURE SETPOINT SHALL BE 68° F/20.0° C (ADJUSTABLE).

VARIABLE AIR VOLUME (VAV) AIR HANDLING UNIT COOLING ONLY POINTS LIST

PLAN DESIGNATION	POINT DESCRIPTION	POINT TYPE						NOTES
		AO	DO	AI	DI	VP	ALARMS	
AHU-X RAH	AHU RETURN AIR HUMIDITY			X			X	ALARM ABOVE SETPOINT (65% RH, ADJUSTABLE)
AHU-X PA DAMP	AHU PRECONDITIONED AIR DAMPER	X						
AHU-X PT	AHU PRECONDITIONED AIR TEMPERATURE			X				
AHU-X MT	AHU MIXED AIR TEMPERATURE			X				
AHU-X FILTER DP	AHU FILTER DIFFERENTIAL PRESSURE			X			X	ALARM ABOVE SETPOINT
AHU-X FILTER DP SP	AHU FILTER DIFFERENTIAL PRESSURE SETPOINT			X		X		ADJUSTABLE
AHU-X WCC ACV	AHU WATER COOLING COIL AUTOMATIC CONTROL VALVE	X		X				
AHU-X WCC DT	AHU WCC AIR DISCHARGE TEMPERATURE			X				
AHU-X SF S/S	AHU SUPPLY FAN START STOP		X					
AHU-X SF STATUS	AHU SUPPLY FAN STATUS				X		X	ALARM MISMATCH WITH AHU-X SF S/S
AHU-X SF VFD	AHU SUPPLY FAN VFD	X		X			X	COMMUNICATION PROTOCOL AS SPECIFIED; ALARM WHEN VFD FAILS
AHU-X ST	AHU SUPPLY AIR TEMPERATURE			X				
AHU-X SUPPLY DD	AHU DUCT DETECTOR			X				PROVIDE AUX CONTACT TO DDC SYSTEM
AHU-X FE SA	AHU-X FLOW ELEMENT SUPPLY AIR			X				INSTALL AFMS PER MANUFACTURER REQUIREMENTS
AHU-X SP	AHU DUCT STATIC PRESSURE			X			X	ALARM ABOVE SETPOINT
AHU-X SP STPT	AHU DUCT STATIC PRESSURE SETPOINT					X		
AHU-X RT	AHU RETURN AIR TEMPERATURE			X				
AHU-X RETURN DD	AHU DUCT DETECTOR				X		X	PROVIDE AUX CONTACT TO DDC SYSTEM
AHU-X RA DAMP	AHU RETURN AIR DAMPER	X						

NOTES:
1. DESIGNATION "X" REFER TO INDIVIDUAL AHU DESIGNATIONS AS SCHEDULED.

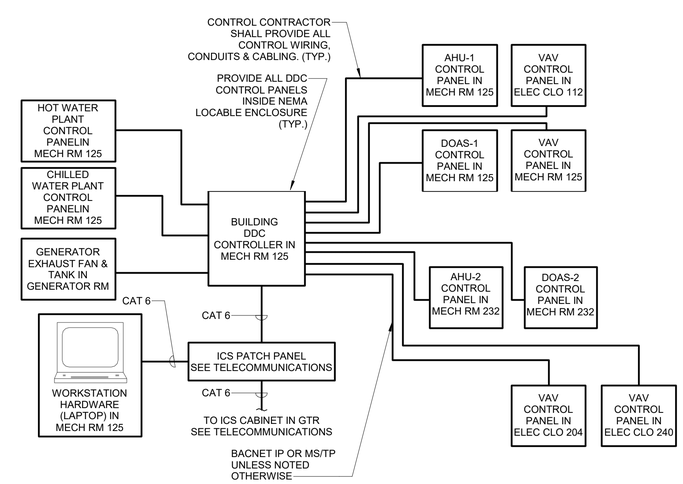

A4 **DDC RISER DIAGRAM**
NOT TO SCALE

SYM	DESCRIPTION	DATE	APPR

NAVFAC

LICENSED PROFESSIONAL ENGINEER JITENDRA VALMIK 062-072817 OF ILLINOIS
EXP: 11/30/2027
SIGNED: 03/11/2026 REV.

ASMD LLC. AE INFO

APPROVED

FOR COMMANDER NAVFAC

ACTIVITY
NATHANIEL PYRON, MILCON PLANNER, DPPH

SATISFACTORY TO DATE 3/10/2026

DES JV | DRW AS | CHK AP

PM/DM DKS/DMK
BRANCH MANAGER KYM
CHIEF ENG/ARCH KYM
FIRE PROTECTION RYO

DEPARTMENT OF THE NAVY
NAVAL FACILITIES ENGINEERING SYSTEMS COMMAND
NAVFAC PACIFIC
U.S. NAVSUPPACT

NAVAL FACILITIES ENGINEERING SYSTEMS COMMAND ~ PACIFIC
MAKALAPA, HAWAII

MCB CAMP BLAZ, GUAM

JFY 2022 PROJECT J-875
BATTLE STAFF TRAINING FACILITY

HVAC SCHEMATICS - SHEET 1

SCALE: NTS
EPROJECT NO.: 1696746
CONSTR. CONTR. NO.
NAVFAC DRAWING NO. 17322125
SHEET 285 OF 468

MH600

DRAWFORM REVISION: 25 AUGUST 2020

3/11/2026 4:37:28 PM MH600
C:\REVIT_2024_PROJECT_FILES\BLDG-J-875-1696746-M_7542_Jon_Koenig.rvt

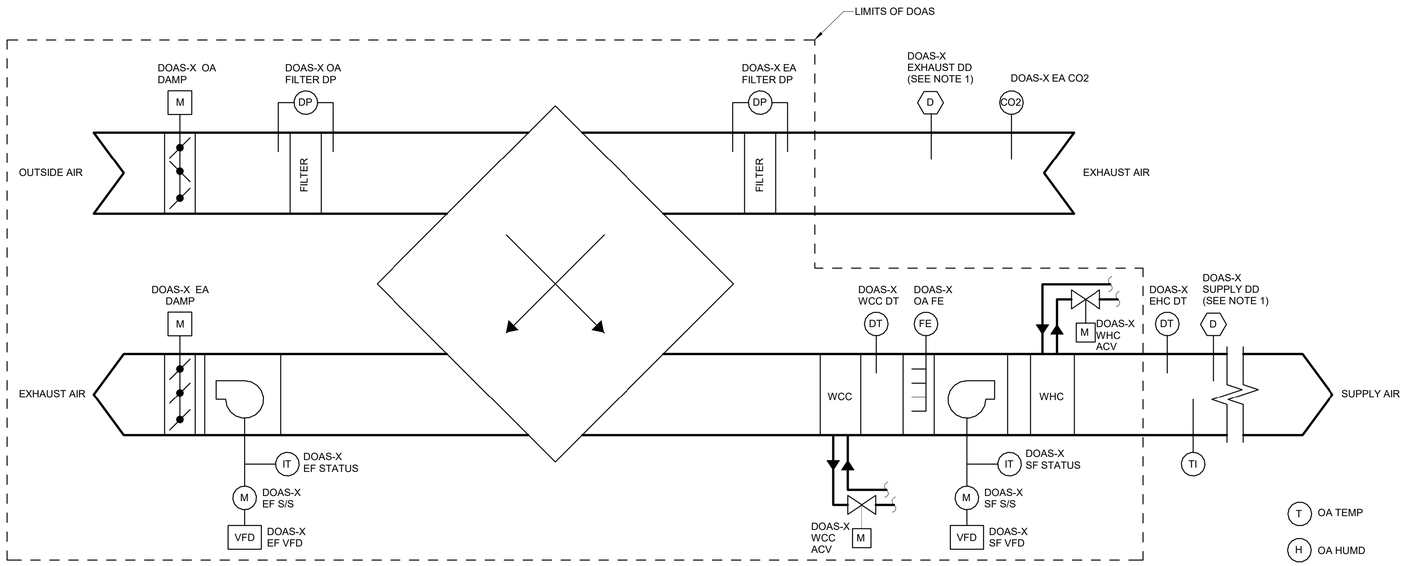

DEDICATED OUTDOOR AIR SYSTEM (DOAS) WITH ENERGY RECOVERY UNIT CONTROL SCHEMATIC

(HOT WATER HEATING/CHILLED WATER COOLING)

NOTE:

1. DUCT DETECTOR TO BE WIRED TO FIRE PROTECTION SYSTEM AS REQUIRED.

DEDICATED OUTDOOR AIR SYSTEM (DOAS) CONTROL POINTS LIST

PLAN DESIGNATION	POINT DESCRIPTION	POINT TYPE						NOTES
		AO	DO	AI	DI	VP	ALARMS	
OA TEMP	OUTDOOR AIR TEMPERATURE			X				
OA HUMD	OUTDOOR AIR RELATIVE HUMIDITY			X				
DOAS-X OA DAMP	DOAS OUTDOOR AIR DAMPER	X						
DOAS-X OA FE	DOAS OUTDOOR AIR FLOW ELEMENT			X				INSTALL AFMS PER MANUFACTURER REQUIREMENTS
DOAS-X OA FILTER DP	DOAS OUTDOOR AIR FILTER DIFFERENTIAL PRESSURE			X			X	ALARM ABOVE SETPOINT
DOAS-X OA FILTER DP SP	DOAS OUTDOOR AIR FILTER DIFFERENTIAL PRESSURE SETPOINT			X		X		ADJUSTABLE
DOAS-X WHC ACV	HEATING COIL WATER VALVE POSITION	X		X				
DOAS-X WHC DT	HEATING COIL AIR DISCHARGE TEMPERATURE			X				
DOAS-X WCC ACV	COOLING COIL WATER VALVE POSITION	X		X				
DOAS-X WCC DT	COOLING COIL AIR DISCHARGE TEMPERATURE			X				
DOAS-X SF S/S	DOAS SUPPLY FAN START STOP		X					
DOAS-X SF STATUS	DOAS-X SUPPLY FAN STATUS				X		X	ALARM MISMATCH WITH DOAS-X SF S/S
DOAS-X SF VFD	DOAS SUPPLY FAN VFD	X		X			X	COMMUNICATION PROTOCOL AS SPECIFIED; ALARM WHEN VFD FAILS
DOAS-X SUPPLY DD	DOAS SUPPLY DUCT DETECTOR			X				PROVIDE AUXILIARY CONTACT TO DDC SYSTEM
DOAS-X EXHAUST DD	DOAS EXHAUST DUCT DETECTOR			X				PROVIDE AUXILIARY CONTACT TO DDC SYSTEM
DOAS-X EA CO2	DOAS EXHAUST AIR CO2 SENSOR			X			X	ALARM ABOVE SETPOINT
DOAS-X EA FILTER DP	DOAS EXHAUST AIR FILTER DIFFERENTIAL PRESSURE			X			X	ALARM ABOVE SETPOINT
DOAS-X EA FILTER DP SP	DOAS EXHAUST AIR FILTER DIFFERENTIAL PRESSURE SETPOINT			X		X		ADJUSTABLE
DOAS-X EF S/S	DOAS DUCT EXHAUST FAN START STOP		X					
DOAS-X EF STATUS	DOAS EXHAUST FAN STATUS				X		X	ALARM MISMATCH WITH DOAS-X EF S/S
DOAS-X EA VFD	DOAS EXHAUST FAN VFD	X		X				COMMUNICATION PROTOCOL AS SPECIFIED; ALARM WHEN VFD FAILS
DOAS-X EA DAMP	DOAS EXHAUST AIR DAMPER	X						

NOTES:

1. DESIGNATION "X" REFER TO INDIVIDUAL DOAS DESIGNATIONS AS SCHEDULED.

SEQUENCE OF OPERATION:

GENERAL REQUIREMENTS

1. HVAC SYSTEMS SHALL BE CONTROLLED BY UNIT MOUNTED STAND ALONE DIRECT DIGITAL CONTROLLER, UNLESS NOTED OTHERWISE. CONTROLLERS SHALL BE INTEGRATED INTO BUILDING DIRECT DIGITAL CONTROL (DDC) SYSTEM FOR REMOTE CONTROL AND MONITORING. DDC SYSTEM COMMUNICATION SHALL BE AS SPECIFIED. PROVIDE LOCAL DISPLAY PANEL (LDP).
2. SET POINTS LABELED AS ADJUSTABLE SHALL BE FULLY ADJUSTABLE FROM OPERATOR WORKSTATIONS. SET POINTS FOR THERMOSTATS WITH INTEGRAL SET POINT ADJUSTMENT SHALL BE ADJUSTABLE FROM BOTH THE THERMOSTAT AND THE OPERATOR WORKSTATION. SET POINT ADJUSTMENT SHALL NOT REQUIRE PROGRAMMING OF DDC PANELS.
3. ALARM REPORTING SHALL BE DONE AT PANEL ASSOCIATED WITH EQUIPMENT AND SHALL BE AVAILABLE AT OPERATOR WORK STATIONS.
4. VENTILATION OUTDOOR AIR AND EXHAUST DAMPERS SHALL BE CAPABLE OF AUTOMATICALLY SHUTTING OFF DURING PREOCCUPANCY BUILDING WARM-UP, COOL DOWN, AND SETBACK PERIODS.

NORMAL CONTROL POSITIONS

1. NORMAL POSITIONS OF CONTROLLED DEVICES SHALL BE POSITION DEVICE RETURNS TO ON POWER FAILURE OR CONTROLLER FAILURE. NORMAL POSITIONS SHALL BE AS FOLLOWS:
   A. OUTDOOR AIR DAMPER: CLOSED
   B. EXHAUST AIR DAMPER: CLOSED
   C. AUTOMATIC CONTROL VALVE (ACV) ON COOLING COILS: CLOSED TO COIL

DEDICATED OUTDOOR AIR SYSTEM (DOAS-X) CONTROL SEQUENCE

1. DOAS SHALL BE CONTROLLED BY STAND ALONE DIRECT DIGITAL CONTROLLER.
2. SUPPLY AND EXHAUST FANS SHALL BE CONTROLLED BY OCCUPIED/UNOCCUPIED SCHEDULE FROM DDC SYSTEM. SEE DOAS SCHEDULE FOR QUANTITY OF FANS AND VFDS.
3. WHEN DOAS-X IS SCHEDULED ON, SUPPLY FAN SHALL START AND RUN CONTINUOUSLY. SUPPLY FAN VARIABLE FREQUENCY DRIVE SHALL MODULATE FAN TO MAINTAIN REQUIRED OUTDOOR AIRFLOW. IF SUPPLY AIRFLOW IS NOT PROVEN FAN SHALL BE STOPPED, AND ALARM SHALL BE ACTIVATED.
4. WHEN DOAS-X IS SCHEDULED ON, EXHAUST FAN SHALL START AND RUN CONTINUOUSLY. EXHAUST FAN VARIABLE FREQUENCY DRIVE SHALL OPERATE AT FIXED SPEED BASED ON INITIAL BALANCING. IF EXHAUST AIRFLOW IS NOT PROVEN, FAN SHALL BE STOPPED AND ALARM SHALL BE ACTIVATED.
5. DEMAND CONTROL VENTILATION: SUPPLY FAN SHALL MODULATE TO MAINTAIN REQUIRED OUTDOOR AIR FLOW. SUPPLY FAN SPEED SHALL BE CONTROLLED BY EA DUCT CO2 SENSOR TO MAINTAIN CO2 LEVELS IN ZONE. SUPPLY FAN SHALL MODULATE OUTDOOR AIRFLOW RATE BETWEEN Vmin. (PER BELOW SCHEDULE) AND Vot (DESIGN VENTILATION RATE). MINIMUM OUTDOOR AIR FLOW RATE SETPOINT SHALL BE ADJUSTABLE ABOVE Vat TO MAINTAIN POSITIVE BUILDING PRESSURIZATION. WHEN CO2 LEVEL REACHES MAXIMUM ALLOWABLE STEADY STATE CONCENTRATION LEVEL (CO2 MAX) OF 1000 PPM (ADJUSTABLE), SUPPLY FAN SHALL OPERATE TO PROVIDE DESIGN VENTILATION RATE (Vot). WHEN STEADY STATE CO2 CONCENTRATION LEVEL DROPS TO 400 PPM (ADJUSTABLE). SUPPLY FAN SPEED BE REDUCED TO PROVIDE MINIMUM VENTILATION AIRFLOW RATE (Vmin).
6. COOLING COIL ACV SHALL MODULATE TO MAINTAIN DISCHARGE AIR TEMPERATURE AT SET POINT (58°F/14.4°C, ADJUSTABLE).
7. HOT WATER CONTROL VALVE SHALL BE CONTROLLED BY ASSOCIATED AHU-X. ON FURTHER DROP IN AHU-X RETURN AIR TEMPERATURE (ONLY AFTER AHU-X SUPPLY AIRFLOW HAS BEEN REDUCED AND SUPPLY AIR TEMPERATURE HAS BEEN RESET), ELECTRIC HEATING COIL SHALL MODULATE TO MAINTAIN REURN AIR TEMPERATURE SETPOINT (68° F/20.0° C, ADJUSTABLE).
8. WHEN SYSTEM IS IN THE "UNOCCUPIED" MODE, SYSTEM SHALL OFF.
9. WHEN SYSTEM IS IN "PRESERVATION" MODE, SYSTEM SHALL OPERATE AS SPECIFIED ABOVE EXCEPT EXHAUST FAN SHALL BE OFF AND HOT WATER CONTROL VALVE SHALL MODULATE TO MAINTAIN SUPPLY AIR TEMPERATURE SETPOINT (68° F/ 20.0° C, ADJUSTABLE).
10. DOAS FAILSAFE: UPON FAILURE OF LEAD AND LAG CHILLER, DOAS SYSTEM SHALL BE SHUT DOWN.
11. SAFETY SHUTDOWN: SAFETY SHUTDOWN CIRCUIT SHALL BE PROVIDED EXTERNAL TO SYSTEM CONTROLLER. CIRCUIT SHALL BE DIRECTLY CONNECTED TO STARTERS OF MOTOR-POWERED EQUIPMENT AND SHALL FUNCTION REGARDLESS OF STATUS OF SYSTEM CONTROLLER. IN EVENT OF SYSTEM SHUTDOWN, DEVICES SHALL RETURN TO NORMAL POSITION. CIRCUITS SHALL BE RESET MANUALLY. FOLLOWING SHALL COMPRISE SAFETY SHUT-DOWN CIRCUIT:
    A. HVAC EMERGENCY SHUTDOWN.
    B. SPACE FIRE ALARM
    C. SMOKE DETECTION IN SUPPLY OR RETURN AIR DUCT.

DEMAND CONTROLLED VENTILATION

PLAN DESIGNATION	Vat (CFM)	Vot (CFM)	Vmin (CFM)	PRESERVATION (CFM)
DOAS-1	1,750	3,050	2,675	1,000
DOAS-2	1,550	3,900	2,400	1,300
DOAS-3	2,400	6,150	2,650	2,050

A1 DOAS CONTROL SCHEMATIC

NOT TO SCALE

SYM	DESCRIPTION	DATE	APPR

NAVFAC

LICENSED PROFESSIONAL ENGINEER JITENDRA VALMIK 062-072817 OF ILLINOIS

EXP: 11/30/2027
SIGNED: 03/11/2026

ASMD LLC.

APPROVED

FOR COMMANDER NAVFAC

ACTIVITY: NATHANIEL PYRON, MILCON PLANNER, DPPH

SATISFACTORY TO DATE: 3/10/2026

DES: JV DRW: AS CHK: AP

PM/DM: DKS/DMK

BRANCH MANAGER: KYM

CHIEF ENG/ARCH: KYM

FIRE PROTECTION: RYO

DEPARTMENT OF THE NAVY
NAVAL FACILITIES ENGINEERING SYSTEMS COMMAND
NAVFAC PACIFIC
U.S. NAVSUPPACT
NAVAL FACILITIES ENGINEERING SYSTEMS COMMAND ~ PACIFIC
MAKALAPA, HAWAII
MCB CAMP BLAZ, GUAM

JFY 2022 PROJECT J-875
BATTLE STAFF TRAINING FACILITY

HVAC SCHEMATICS - SHEET 2

SCALE: NTS

EPROJECT NO.: 1696746

CONSTR. CONTR. NO.

NAVFAC DRAWING NO. 17322126

SHEET 286 OF 468

MH601

DRAWFORM REVISION: 25 AUGUST 2020

3/11/2026 4:37:31 PM MH601
C:\REVIT_2024_PROJECT_FILES\BLDG-J-875-1696746-M_7542_Jon_Koenig.rvt

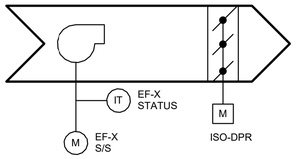

ELECTRICAL ROOM EXHAUST

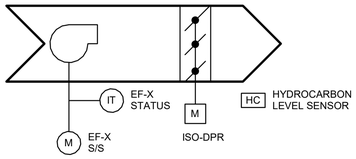

EMERGENCY GENERATOR ROOM EXHAUST

FAN & FUEL TANK POINTS LIST

PLAN DESIGNATION	POINT DESCRIPTION	POINT TYPE						NOTES
		AO	DO	AI	DI	VP	ALARMS	
EF-X S/S	EF-X-XXX FAN START/STOP		X					
EF-X STATUS	EF-X-XXX FAN STATUS				X		X	ALARM MISMATCH WITH EF-X S/S
HC	HYDROCARBON LEVEL			X			X	ALARM WHEN ABOVE SETPOINT
HC SP	HYDROCARBON LEVEL SETPOINT					X	X	ALARM WHEN ABOVE SETPOINT
GFT HI	GENERATOR FUEL TANK HIGH LEVEL			X			X	ALARM WHEN ABOVE SETPOINT
GFT-LO	GENERATOR FUEL TANK LOW LEVEL			X			X	ALARM WHEN ABOVE SETPOINT
LD	GENERATOR FUEL LEAK DETECTION				X		X	ALARM WHEN ABOVE SETPOINT
ISO-DPR	EMERGENCY SHUT OFF ISO DAMPER		X		X			ALARM WHEN ABOVE SETPOINT

NOTES:

1. DESIGNATION "X" REFER TO INDIVIDUAL EXHAUST FAN DESIGNATIONS AS SCHEDULED.

C1 EXHAUST FAN SCHEMATIC & POINT LIST

NOT TO SCALE

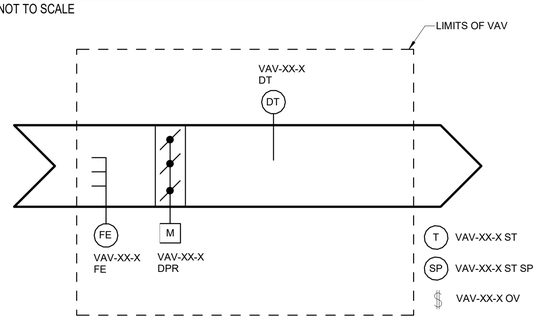

VARIABLE AIR VOLUME UNIT CONTROL SCHEMATIC (VAV-XX-X)

(NO REHEAT)

VARIABLE AIR VOLUME (VAV) COOLING ONLY POINTS LIST

PLAN DESIGNATION	POINT DESCRIPTION	POINT TYPE						NOTES
		AO	DO	AI	DI	VP	ALARMS	
VAV-XX-X DPR	VAV DAMPER POSITION	X						
VAV-XX-X FE	VAV AIRFLOW			X		X		CALCULATED VALUE
VAV-XX-X DT	VAV AIR DISCHARGE TEMPERATURE			X				
VAV-XX-X ST	VAV SPACE TEMPERATURE			X				
VAV-XX-X ST SP	VAV SPACE TEMPERATURE SETPOINT			X		X		SETPOINT ADJUSTABLE FROM THERMOSTAT
VAV-XX-X OVS	VAV OCCUPIED/UNOCCUPIED OVERRIDE SWITCH				X			
VAV-XX-X MAX FLOW	VAV MAXIMUM AIRFLOW					X		SEE VAV SCHEDULES FOR MAXIMUM AIRLFOW VALUES
VAV-XX-X MIN FLOW	VAV MINIMUM AIRFLOW					X		SEE VAV SCHEDULES FOR MINIMUM AIRLFOW VALUES

NOTES:

1. DESIGNATION "XX-X" REFERS TO INDIVIDUAL VAV DESIGNATIONS AS SCHEDULED.

A2 VAV SCHEMATIC & POINT LIST

NOT TO SCALE

EXHAUST FAN (EF-X) SEQUENCE OF OPERATION:

GENERAL REQUIREMENTS (**FOR DDC INSTALLATIONS**)

1. HVAC SYSTEMS SHALL BE CONTROLLED BY BUILDING DIRECT DIGITAL CONTROLLER (DDC), AS NOTED BELOW. DDC SYSTEM COMMUNICATION SHALL BE AS SPECIFIED.
2. SET POINTS LABELED AS ADJUSTABLE SHALL BE FULLY ADJUSTABLE AT OPERATOR WORKSTATIONS. SET POINT ADJUSTMENT SHALL NOT REQUIRE PROGRAMMING OF THE CONTROLLER.
3. FAN STATUS SHALL BE MONITORED AT DDC SYSTEM AND AN ALARM SHALL BE INTIATED UPON FAILURE. ALARM REPORTING SHALL BE AVAILABLE FROM OPERATOR WORKSTATIONS.

MECHANICAL/ELECTRICAL ROOM EXHAUST FAN CONTROL SEQUENCE (DDC)

1. EF-X SERVICING ELECTRICAL ROOMS SHALL BE RUN 24 HOURS, 7 DAYS PER WEEK.
2. EF-X SERVING EMERGENCY GENERATOR ROOM SHALL BE INTERLOCKED WITH HYDROCARBON SENSOR. WHEN HYDROCARBON CONCENTRATION EXCEEDS SETPOINT (25% LFL, ADJUSTABLE), EXHAUST FAN SHALL START TO MAINTAIN CONCENTRATION. WHEN CONCENTRATION IS BELOW SETPOINT, EXHAUST FAN SHALL STOP.

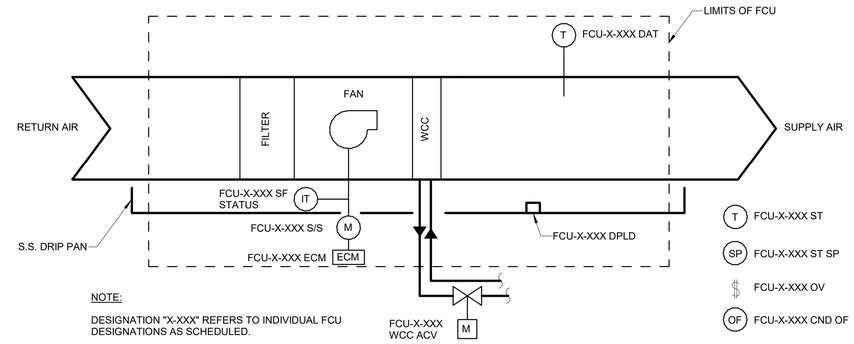

NOTE:

DESIGNATION "X-XXX" REFERS TO INDIVIDUAL FCU DESIGNATIONS AS SCHEDULED.

TYPICAL FAN COIL UNIT SCHEMATIC (FCU-X-XXX)

(CHILLED WATER COOLING ONLY)

FAN CONTROL UNIT POINTS LIST

PLAN DESIGNATION	POINT DESCRIPTION	POINT TYPE						NOTES
		AO	DO	AI	DI	VP	ALARMS	
FCU-X-XXX MODE	FCU FAN MODE SELECTION			X				
FCU-X-XXX S/S	FCU FAN START STOP		X					
FCU-X-XXX SF STATUS	FCU SUPPLY FAN STATUS				X		X	ALARM MISMATCH WITH FCU-X-XXX S/S
FCU-X-XXX ECM	FCU SUPPLY FAN ECM	X		X		X	X	COMMUNICATION VIA PROTOCOL AS SPECIFIED
FCU-X-XXX WWC ACV	FCU WATER COOLING COIL AUTOMATIC CONTROL VALVE	X		X				
FCU-X-XXX DAT	FCU DISCHARGE AIR TEMPERATURE			X				APPLICABLE TO BLOWER COILS ONLY
FCU-X-XXX ST	FCU SPACE TEMPERATURE			X			X	ALARM IF TEMPERATURE VARIES 5° ABOVE OR BELOW SETPOINT FOR 5 MINUTES
FCU-X-XXX ST SP	FCU SPACE TEMPERATURE SETPOINT			X		X		SETPOINT ADJUSTABLE FROM THERMOSTAT
FCU-X-XXX CND OF	FCU CONDENSATE OVERFLOW				X		X	OVERFLOW ALARM
FCU-X-XXX DPLD	FCU DRIP PAN LEAK DETECTION (GTR & CTR RM.)				X		X	OVERFLOW ALARM
FCU-X-XXX FM	FCU FILTER RUNTIME MONITOR				X		X	ALARM ABOVE SETPOINT
FCU-X-XXX FM SP	FCU FILTER RUNTIME SETPOINT					X		ADJUSTABLE
TBD	ADDITIONAL ITEMS FROM ABOVE							SYSTEM SHALL ALLOW FOR ADDITIONAL 20% (APPROX.) FUTURE POINTS

NOTES:

1. DESIGNATION "X-XXX" REFER TO INDIVIDUAL FAN COIL UNIT DESIGNATIONS AS SCHEDULED.

B4 FAN COIL UNIT SCHEMATIC & POINT LIST

NOT TO SCALE

SEQUENCE OF OPERATION:

GENERAL REQUIREMENTS

1. HVAC SYSTEMS SHALL BE CONTROLLED BY UNIT MOUNTED, STAND ALONE DIRECT DIGITAL CONTROLLERS, UNLESS NOTED OTHERWISE. CONTROLLERS SHALL BE INTERGRATED INTO BUILDING DIRECT CONTROL (DDC) SYSTEM FOR REMOTE CONTROL AND MONITORING. DDC SYSTEM COMMUNICATION SHALL BE AS SPECIFIED.
2. SET POINTS LABELED AS ADJUSTABLE SHALL BE FULLY ADJUSTABLE FROM OPERATOR WORKSTATIONS. SET POINTS FOR THERMOSTATS WITH INTEGRAL SET POINT ADJUSTMENT SHALL BE ADJUSTABLE FROM BOTH THE THERMOSTAT AND THE OPERATOR WORKSTATION. SET POINT ADJUSTMENT SHALL NOT REQUIRE PROGRAMMING OF DDC PANELS. ALL SETPOINTS, TIMERS, DEADBANDS, ETC., LISTED IN SEQUENCES SHALL BE ADJUSTABLE BY THE USER WHETHER INDICATED AS ADJUSTABLE IN SEQUENCE OR NOT. SOFTWARE POINTS SHALL BE USED FOR THESE POINTS.
3. ALARM REPORTING SHALL BE DONE AT PANEL ASSOCIATED WITH EQUIPMENT AND SHALL BE AVAILABLE FROM OPERATOR WORK STATIONS.

NORMAL CONTROL POSITIONS

1. NORMAL POSITIONS OF CONTROLLED DEVICES SHALL BE THE POSITION A DEVICE RETURNS TO ON POWER FAILURE OR CONTROLER FAILURE. NORMAL POSITIONS SHALL BE AS FOLLOWS:
   A. VARIABLE AIR VOLUME UNIT DAMPER:LAST POSITION UNLESS NOTED OTHERWISE.

VARIABLE AIR VOLUME UNIT (VAV-XX-X)

1. VAV-XX-X SHALL BE CONTROLLED BY UNIT MOUNTED, STAND ALONE DIRECT DIGITAL CONTROLLER.
2. WHEN SYSTEM IS IN THE "OCCUPIED" MODE OF OPERATION, AS DETERMINED BY PROGRAMMED OCCUPANCY SCHEDULE OR OVERRIDE SIGNAL FROM THE DDC SYSTEM, VAV UNITS SHALL OPERATE AS FOLLOWS:
   A. WHEN SPACE TEMPERATURE IS ABOVE COOLING SET POINT (78°F/25.6°C, ADJUSTABLE FOR OFFICE SPACES, 85°F/29.4°C, ADJUSTABLE FOR MECHANICAL AND ELECTRICAL SPACES), VAV DAMPER SHALL MODULATE BETWEEN MINIMUM AND MAXIMUM CFM SETPOINTS TO MAINTAIN SPACE TEMPERATURE. ON DROP IN SPACE TEMPERATURE BELOW COOLING SET POINT VAV UNIT DAMPER SHALL MODULATE TO MINIMUM CFM. IF THE SUPPLY AIR TEMPERATURE FROM THE AIR HANDLING UNIT IS GREATER THAN ROOM TEMPERATURE, COOLING SUPPLY AIRFLOW SETPOINT SHALL BE NO HIGHER THAN MINIMUM.
3. WHEN SYSTEM IS IN THE "UNOCCUPIED" MODE OF OPERATION AS DETERMINED BY PROGRAMMED OCCUPANCY SCHEDULE OR OVERRIDE SIGNAL FROM DDC SYSTEM, VAV SHALL OPERATE AS INDICATED FOR OCCUPIED MODE EXCEPT COOLING SET POINT SHALL BE CHANGED TO COOLING SET POINT (80° F/26.7°C, ADJUSTABLE FOR OFFICE SPACES, 90°F/32.2° C, ADJUSTABLE FOR MECHANICAL AND ELECTRICAL SPACES).
4. WHEN SYSTEM IS IN THE "UNOCCUPIED" MODE OF OPERATION AND OVERRIDE SWITCH IS ACTIVATED, VAV SHALL OPERATE AS INDICATED FOR OCCUPIED MODE FOR A PERIOD OF 60 MINUTES (ADJUSTABLE). VAV SHALL SWITCH TO "UNOCCUPIED" MODE AFTER TIME PERIOD HAS ELAPSED AND OPERATE AS INDICATED FOR UNOCCUPIED MODE OF OPERATION.
5. WHEN SYSTEM IS IN "PRESERVATION" MODE OF OPERATION, VAV SHALL OPERATE AS INDICATED FOR OCCUPIED MODE EXCEPT COOLING SET POINT SHALL BE CHANGED TO 85° F/29.4° C.

SEQUENCE OF OPERATION:

GENERAL REQUIREMENTS

1. HVAC SYSTEM SHALL BE CONTROLLED BY UNIT MOUNTED, STAND ALONE DIRECT DIGITAL CONTROLLERS. UNLESS NOTED OTHERWISE. CONTROLLERS SHALL BE INTEGRATED INTO BUILDING DIRECT DIGITAL CONTROL (DDC) SYSTEM FOR REMOTE CONTROL AND MONITORING. DDC SYSTEM COMMUNICATION SHALL BE AS SPECIFIED.
2. SET POINTS LABELED AS ADJUSTABLE SHALL BE FULLY ADJUSTABLE FROM OPERATOR WORKSTATIONS. SETPOINTS FOR THERMOSTATS WITH INTEGRAL SET POINT ADJUSTMENTS SHALL BE ADJUSTABLE FROM BOTH THE THERMOSTAT AND THE OPERATOR WORKSTATION. SETPOINT ADJUSTMENT SHALL NOT REQUIRE PROGRAMMING OF DDC PANELS. ALL SETPOINTS, TIMERS, DEADBANDS, ETC., LISTED IN SEQUENCES SHALL BE ADJUSTABLE IN SEQUENCE OR NOT, SOFTWARE POINTS SHALL BE USED FOR THESE POINTS.
3. ALARM REPORTING SHALL BE DONE AT PANEL ASSOCIATED WITH EQUIPMENT AND SHALL BE AVAILABLE FROM OPERATOR WORKSTATIONS.

NORMAL CONTROL POSITIONS

1. NORMAL POSITIONS OF CONTROLLED DEVICES SHALL BE POSITION DEVICE. RETURNS TO ON POWER FAILURE OR CONTROLLER FAILURE. NORMAL POSITIONS SHALL BE AS FOLLOWS:
   A. AUTOMATIC CONTROL VALVE (ACV) ON COOLING COILS: OPEN TO COIL UNLESS NOTED OTHERWISE.

FAN COIL UNIT (FCU-X-XXX) CONTROL SEQUENCE

1. FCU-X-XXX SHALL BE CONTROLLED BY UNIT MOUNTED STAND ALONE DDC CONTROLLER.
2. FCU-X-XXX SERVING TELECOMMUNICATION ROOMS AND ELEVATOR MACHINE ROOMS SHALL BE ENABLED 24 HRS, 7 DAYS A WEEK.
   A. WHEN SPACE TEMPERATURE IS ABOVE COOLING SETPOINT (80.6 F/27 C, ADJUSTABLE), FAN SHALL START AND WATER COOLING COIL (WCC) ACV SHALL MODULATE TO MAINTAIN SPACE TEMPERATURE. WHEN SPACE IS BELOW SETPOINT WCC ACV SHALL CLOSE AND FAN SHALL STOP
3. FOR FCU-X-XXX SERVING STAIRS WHEN SYSTEM IS IN "OCCUPIED" MODE OF OPERATION, AS DETERMINED BY PROGRAMMED OCCUPANCY SCHEDULE OR OVERRIDE SIGNAL FROM THE DDC SYSTEM, FCU SHALL OPERATE AS FOLLOWS:
   A. WHEN SPACE TEMPERATURE IS ABOVE COOLING SETPOINT (78°F/25.6°C, ADJUSTABLE), FAN SHALL START AND WATER COOLING COIL (WCC) ACV SHALL MODULATE TO MAINTAIN SPACE TEMPERATURE. WHEN SPACE TEMPERATURE IS BELOW COOLING SETPOINT WCC ACV SHALL CLOSE AND FAN SHALL STOP.
   B. WHEN SYSTEM IS IN THE "UNOCCUPIED" MODE OF OPERATION AS DETERMINED BY PROGRAMMED OCCUPANCY SCHEDULE OR OVERRIDE SIGNAL FROM DC SYSTEM, FCU SHALL OPERATE AS INDICATED FOR OCCUPIED MODE EXCEPT COOLING SETPOINT SHALL BE CHANGED TO COOLING BACK SETPOINT (80°F/26.7°C, ADJUSTABLE).
5. WHEN SYSTEM IS IN THE "UNOCCUPIED" MODE OF OPERATION AND OVERRIDE SWITCH IS ACTIVATED, FCU SHALL OPERATE AS INDICATED FOR OCCUPIED MODE FOR A PERIOD OF 60 MINUTES (ADJUSTABLE). FCU SHALL SWITCH TO "UNOCCUPIED" MODE AFTER TIME PERIOD HAS ELAPSED AND OPERATE AS INDICATED FOR UNOCCUPIED MODE OF OPERATION.
6. WHERE MULTIPLE FCUS SERVE A SINGLE SPACE, PROVIDE LEAD/LAG CONTROL. CHANGE LEAD UNIT DESIGNATION ON A WEEKLY (ADJUSTABLE) BASIS.

SAFETY SHUTDOWN

1. SAFETY SHUTDOWN CIRCUIT SHALL BE PROVIDED EXTERNAL TO SYSTEM CONTROLLER. CIRCUIT SHALL BE DIRECTLY CONNECTED TO STARTERS OF MOTOR-POWERED EQUIPMENT AND SHALL FUNCTION REGARDLESS OF STATUS OF SYSTEM CONTROLLER. IN EVENT OF SYSTEM SHUTDOWN, DEVICES SHALL RETURN TO NORMAL POSITION. CIRCUITS SHALL BE RESET MANUALLY. FOLLOWING SHALL COMPRISE SAFETY SHUT-DOWN CIRCUIT:
   A. CONDENSATE OVERFLOW SWITCH

LIGHTING CONTROL INTERFACE:

1. LIGHTING CONTROLLER SHALL BE INTEGRATED INTO BUILDING DIRECT DIGITAL CONTROL (DDC) SYSTEM FOR REMOTE CONTROL AND MONITORING. DDC SYSTEM COMMUNICATION SHALL BE AS SPECIFIED.
2. CONTROL FEATURES AND MONITORING POINTS DISPLAYED LOCALLY AT LIGHTING CONTROL PANEL SHALL BE AVAILABLE THROUGHOUT THE DDC SYSTEM.
3. ALL POINTS SHALL BE ABLE TO BE TRENDED AND TIME DELAYS SHALL BE ADJUSTABLE FROM OPERATOR WORKSTATION.
4. MONITOR, CONTROL, DISPLAY, AND RECORD DATA FROM THE LIGHTING CONTROL SYSTEM.
5. SEE ELECTRICAL DRAWINGS FOR LIGHTING CONTROL DIAGRAMS AND LIGHTING PLANS.
6. SEE SECTION 26 51 00 INTERIOR LIGHTING FOR ADDITIONAL REQUIREMENTS.

A5 LIGHTING CONTROL INTERFACE

SCALE: NONE

SYM	DESCRIPTION	DATE	APPR

NAVFAC

LICENSED PROFESSIONAL ENGINEER JITENDRA VALMIK 062-072817 STATE OF ILLINOIS
EXP: 11/30/2027
SIGNED: 03/11/2026

ASMD LLC. AE INFO

APPROVED

FOR COMMANDER NAVFAC

ACTIVITY
NATHANIEL PYRON, MILCON PLANNER, DPPH

SATISFACTORY TO DATE 3/10/2026

DES JV | DRW AS | CHK AP

PM/DM DKS/DMK
BRANCH MANAGER KYM
CHIEF ENG/ARCH KYM
FIRE PROTECTION RYO

DEPARTMENT OF THE NAVY
NAVAL FACILITIES ENGINEERING SYSTEMS COMMAND
NAVFAC PACIFIC
U.S. NAVSUPPACT

NAVAL FACILITIES ENGINEERING SYSTEMS COMMAND ~ PACIFIC
MAKALAPA, HAWAII
MCB CAMP BLAZ, GUAM

JFY 2022 PROJECT J-875
BATTLE STAFF TRAINING FACILITY

HVAC SCHEMATICS - SHEET 3

SCALE: NTS
EPROJECT NO.: 1696746
CONSTR. CONTR. NO.
NAVFAC DRAWING NO. 17322127
SHEET 287 OF 468

MH602

DRAWFORM REVISION: 25 AUGUST 2020

3/11/2026 4:37:34 PM MH602
C:\REVIT_2024_PROJECT_FILES\BLDG-J-875-16696746-M_T542_Jon_Koenig.rvt

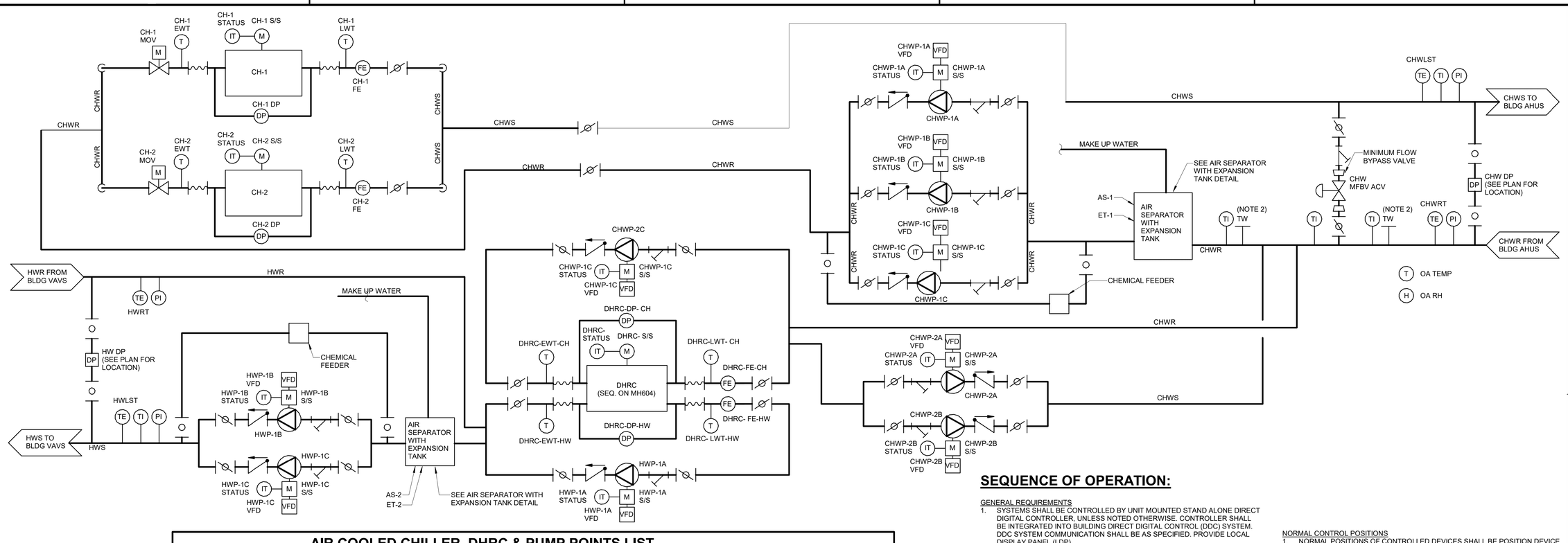

AIR COOLED CHILLER, DHRC & PUMP POINTS LIST

PLAN DESIGNATION	POINT DESCRIPTION	POINT TYPE						NOTES
		AO	DO	AI	DI	VP	ALARMS	
CHW, HW RT	CHILLED & HOT WATER RETURN TEMPERATURE			X				
CHWP-X S/S	CHILLED WATER PUMP-X START/STOP X=1A,1B,1C,2A,2B (TYP.5)		X					
CHWP-X STATUS	CHILLED WATER PUMP-X STATUS X=1A,1B,1C,2A,2B (TYP.5)				X		X	ALARM MISMATCH WITH CHWP-X S/S
CHWP-X VFD	CHILLED WATER PUMP-X VFD X=1A,1B,1C,2A,2B (TYP.5)	X		X			X	COMMUNICATION VIA PROTOCOL AS SPECIFIED; ALARM WHEN VFD FAILS
HWP-X S/S	HOT WATER PUMP-X START/STOP X=1A,1B,1C (TYP.3)		X					
HWP-Y STATUS	HOT WATER PUMP-Y STATUS X=1A,1B,1C (TYP.3)				X		X	ALARM MISMATCH WITH CHWP-Y S/S
HWP-Y VFD	HOT WATER PUMP-Y VFD X=1A,1B,1C (TYP.3)	X		X			X	COMMUNICATION VIA PROTOCOL AS SPECIFIED; ALARM WHEN VFD FAILS
CH-X MOV	CHILLER-X MOTOR OPERATED VALVE X=1,2 (TYP.2)	X		X				
CH-X EWT	CHILLER-X ENTERING WATER TEMPERATURE X=1,2 (TYP.2)			X				
CH-X S/S	CHILLER-X START/STOP X=1,2 (TYP.2)		X					
CH-X STATUS	CHILLER-X STATUS X=1,2 (TYP.2)				X		X	ALARM MISMATCH WITH CH-X S/S
CH-X DP	CHILLER-X DIFFERENTIAL PRESSURE X=1,2 (TYP.2)			X				
CH-X LWT	CHILLER-X LEAVING WATER TEMPERATURE X=1,2 (TYP.2)			X				
CH-X FE	CHILLER-X FLOW ELEMENT X=1,2 (TYP.2)			X				
DHRC-EWT-X	DHRC ENTERING WATER TEMPERATURE X=CHW, HW (TYP. 2)			X				
DHRC S/S	CHILLER-Y START/STOP		X					
DHRC STATUS	CHILLER-Y STATUS				X		X	ALARM MISMATCH WITH CH-Y S/S
DHRC-DP-X	DHRC DIFFERENTIAL PRESSURE X=CH, HW (TYP. 2)			X				
DHRC-LWT-X	DHRC LEAVING WATER TEMPERATURE X=CH, HW (TYP. 2)			X				
DHRC-FE-X	DHRC FLOW ELEMENT X=CH, HW (TYP. 2)			X				
CHW MFBV ACV	CHILLED WATER MINIMUM FLOW BYPASS CONTROL VALVE	X		X				
CHW MFBV ACV SP	CHILLED WATER MINIMUM FLOW BYPASS CONTROL VALVE SET POINT					X		DETERMINED BY CHILLER MINIMUM FLOW REQUIREMENTS
CHW, HW LST	CHILLED & HOT WATER LOOP SUPPLY TEMPERATURE			X			X	ALARM WHEN TEMPERATURE IS ABOVE SET POINT
CHWLS, HW LST SP	CHILLED & HOT WATER LOOP SUPPLY TEMPERATURE SET POINT					X		
CHW, HW DP	CHILLED & HOT WATER DIFFERENTIAL PRESSURE			X				
CHW, HW DP SP	CHILLED & HOT WATER DIFFERENTIAL PRESSURE SETPOINT					X		
OA TEMP	OUTDOOR AIR TEMPERATURE			X				

NOTES:
1. DHRC SEQUENCE OF OPERATION ON SHEET MH604.

SEQUENCE OF OPERATION:

GENERAL REQUIREMENTS
1. SYSTEMS SHALL BE CONTROLLED BY UNIT MOUNTED STAND ALONE DIRECT DIGITAL CONTROLLER. UNLESS NOTED OTHERWISE. CONTROLLER SHALL BE INTEGRATED INTO BUILDING DIRECT DIGITAL CONTROL (DDC) SYSTEM. DDC SYSTEM COMMUNICATION SHALL BE AS SPECIFIED. PROVIDE LOCAL DISPLAY PANEL (LDP).
2. SET POINTS LABELED AS ADJUSTABLE SHALL BE FULLY ADJUSTABLE FROM THE CONTROL PANELS AND OPERATOR WORKSTATIONS. SET POINT ADJUSTMENT SHALL NOT REQUIRE PROGRAMMING OF THE CONTROL PANEL. ALL SETPOINTS, TIMERS, DEADBANDS, ETC., LISTED IN SEQUENCES SHALL BE ADJUSTABLE BY THE USER WHETHER INDICATED AS ADJUSTABLE IN SEQUENCE OR NOT. SOFTWARE POINTS SHALL BE USED FOR THESE POINTS.
3. ALARM REPORTING SHALL BE DONE AT PANEL ASSOCIATED WITH EQUIPMENT AND SHALL BE AVAILABLE FROM OPERATOR WORKSTATIONS.
4. THE CONTROL APPLICATION SHALL BE DESIGNED TO MAXIMIZE THE CHILLER PLANT'S OPERATING EFFICIENCY. WHEN ENABLED, THE SYSTEM SHALL MAINTAIN AT LEAST ONE CHILLER ON TO MAINTAIN MINIMUM OR BASE LOAD TONS; DETERMINE THE PERCENT LOAD OF THE SYSTEM AND MAXIMIZE THE CHILLER PLANT EFFICIENCY BY CHOOSING THE MOST EFFICIENT CHILLER/DEVICES (OR COMBINATION OF CHILLERS/DEVICES) AVAILABLE TO MEET THE REQUIRED LOAD. EFFICIENCIES ARE TO BE CALCULATED BASED ON SELECTED MANUFACTURER AND ON THE INDIVIDUAL DEVICE'S OVERALL COEFFICIENT OF PERFORMANCE (COP), PERCENT LOAD, REQUIRED CAPACITY, AND RATED FLOWS. CURRENT ASSUMPTION IS THAT THE CHILLER PLANT LOAD WILL USE A CAPACITY CALCULATION BASED ON PERCENT FULL LOAD AMPS (CHX%-FLA). WHEN ADDED TO ALL OTHER DEVICES RUNNING, SYSTEM SHALL DETERMINE THE TOTAL CURRENT CHILLER PLANT CAPACITY (CHLR-AMPS-TOT).
5. THE CHILLER PLANT PROGRAM SHALL OPERATE THE MINIMUM NUMBER OF CHILLERS NECESSARY BASED ON OVERALL CHILLER PLANT EFFICIENCY. AFTER THE LEAD CHILLER IS STARTED, THE ADDITIONAL CHILLER WILL ONLY BE ADDED IF/WHEN THE EXISTING CHILLER IS NOT OPERATING AT MAXIMUM DESIGN PART LOAD EFFICIENCY, AND THE ADDITION OF THE OTHER CHILLER CREATES A BETTER OVERALL EFFICIENCY WITH BOTH CHILLERS AT PART LOAD. MAXIMUM EFFICIENCY WILL BE CALCULATED IN REAL TIME BASED ON THE ENTERING CHW TEMPERATURE AND CHW SETPOINT USING MANUFACTURER'S DATA FOR THE SPECIFIC INSTALLED CHILLER MODEL. AN ADDITIONAL CHILLER MAY ALSO BE STARTED IF THE FLOW RATE THROUGH THE CHILLER EXCEEDS IT'S MAXIMUM VALUE (AS RECOMMENDED BY THE CHILLER MANUFACTURER) FOR A SPECIFIC PERIOD (20 MINUTES, ADJUSTABLE).
   A. AFTER AN ADJUSTABLE PERIOD (1 MINUTE), THE NEXT AVAILABLE CHW PUMP SHALL BE COMMANDED TO START
   B. ONCE THE STATUS OF THE PUMP HAS BEEN PROVEN, THE RESPECTIVE ISOLATION CONTROL VALVE SHALL BE COMMANDED TO OPEN. AFTER THE VALVE POSITION IS VERIFIED OPEN, THE CHILLER SHALL BE COMMANDED TO START.
   C. THE OPERATING CHILLERS' CURRENT-LIMIT-SETPOINTS SHALL BE RELEASED, ALLOWING THEM TO LOAD-UP AS REQUIRED, AND RUN IN TANDEM WITHOUT EXCEEDING OVERALL PLANT ELECTRICAL DEMAND.
6. MODULATE THE MINIMUM FLOW BYPASS VALVE TO ENSURE MINIMUM FLOW THROUGH THE OPERATING CHILLERS. THE DEFAULT CHILLER MINIMUM FLOW RATE (ADJUSTABLE AND BASED ON THE SELECTED CHILLER MANUFACTURER) SHALL BE MAINTAINED WHILE CHILLER IS OPERATIONAL.
7. A CHILLER SHALL RECEIVE A STOP COMMAND ONCE THE BUILDING SYSTEM LOADS ARE MET, AND THE CHILLER PLANT PROGRAM DETERMINES THAT THE EFFICIENCY OF THE CHILLER PLANT SYSTEM WILL IMPROVE WITH ONLY ONE CHILLER ENABLED. AT THE STOP COMMAND, THE RESPECTIVE CHW PUMP WILL CONTINUE TO RUN FOR A REQUIRED ADDITIONAL TIME IN MINUTES (ADJUSTABLE, PER MANUFACTURER RECOMMENDATIONS). AFTER THIS TIME PERIOD EXPIRES, THE CHW PUMP WITH THE HIGHEST RUN-TIME SHALL BE SHUTDOWN AND THE CORRESPONDING ISOLATION CONTROL VALVE SHALL BE COMMANDED TO CLOSE AND THE ISOLATION-VALVE POSITION VERIFIED CLOSED.

NORMAL CONTROL POSITIONS
1. NORMAL POSITIONS OF CONTROLLED DEVICES SHALL BE POSITION DEVICE RETURNS TO ON POWER FAILURE OR CONTROLLER FAILURE. NORMAL POSITIONS SHALL BE AS FOLLOWS:
   A. AUTOMATIC CONTROL VALVE (ACV): LAST POSITION, UNLESS NOTED OTHERWISE.

CHILLER AND PUMP CONTROL SEQUENCE:
1. CHILLERS AND PUMPS SHALL BE ASSOCIATED AS FOLLOWS:
   A. CH-1 & CH-2 WITH CHWP-1A & CHWP-1B (REFER TO AIR COOLED CHILLER AND CHILLED WATER PUMP SCHEDULES).
2. CHILLERS AND ASSOCIATED PUMPS SHALL BE CONTROLLED BY MULTIPLE CHILLER CONTROL SYSTEM AS FOLLOWS:
   A. CHILLED WATER SHALL BE ENABLED WHEN THE OUTDOOR AIR TEMPERATURE IS ABOVE 50º F/10º C (ADJUSTABLE).
   B. WHEN CHILLED WATER IS ENABLED, CONTROL PANEL SHALL OPEN CONTROL VALVES TO OPERATE INDICATED CHILLER AND PUMP.
   C. ON COMMAND TO START CHILLED WATER PUMP, VARIABLE FREQUENCY DRIVE (VFD) SHALL START LEAD PUMP AND OPERATE AT MINIMUM SPEED.
   D. ONCE WATER FLOW HAS BEEN PROVEN, LEAD CHILLER SHALL START AND PUMP VFD SHALL MODULATE AS REQUIRED TO MAINTAIN DIFFERENTIAL STATIC PRESSURE AT SET POINT. SETPOINT SHALL BE RESET DOWNWARD TILL ONE VALVE IS 100% OPEN.
   E. VFD SHALL LIMIT RATE OF CHANGE OF FLOW AS REQUIRED BY CHILLER MANUFACTURER FOR VARIABLE PRIMARY SYSTEM.
   F. IN THE EVENT FLOW THROUGH THE CHILLER APPROACHES REQUIRED MINIMUM FLOW RATE RECOMMENDED BY THE MANUFACTURER, MINIMUM FLOW BYPASS VALVE SHALL OPEN AND MODULATE TO MAINTAIN REQUIRED MINIMUM FLOW RATE.
   G. CONTROL SYSTEM SHALL ENABLE CONTROLS TO OPERATE CHILLER TO MAINTAIN CHILLED WATER SUPPLY TEMPERATURE AT SET POINT (44°F/6.7°C, ADJUSTABLE).
   H. ON DROP IN CHILLED WATER SUPPY TEMPERATURE BELOW SET POINT, CHILLER CONTROLLER SHALL TURN CHILLER OFF.
3. CHILLERS SHALL BE OPERATED IN A LEAD/LAG MODE AND BE CONTROLLED BY THE MULTIPLE CHILLER CONTROL SYSTEM. CONTROL SYSTEM SHALL ENSURE UNITS ARE OPERATED WITH EQUAL RUN TIME.
4. WHEN LEAD CHILLER IS OPERATING AT 90% (ADJUSTABLE) OF ITS CAPACITY, LAG CHILLER CONTROL VALVES SHALL OPEN AND CHILLER SHALL TURN ON. LEAD CHILLER ACV SHALL MODULATE CLOSE WHILE LAG CHILLER ACV SHALL MODULATE OPEN PROPORTIONALLY TILL BOTH CHILLERS ARE EQUALLY LOADED (45% CAPACITY, ADJUSTABLE).
5. UPON DROP IN COOLING LOAD FOR EACH CHILLER TO 40% (ADJUSTABLE) OF ITS CAPACITY, LAG CHILLER SHALL TURN OFF AND CONTROL VALVES SHALL CLOSE. LEAD CHILLER ACV SHALL MODULATE WIDE OPEN TO MAINTAIN CHILLED WATER SUYPPLY TEMPERATURE AT SET POINT.
6. PUMPS SHALL BE OPERATED IN A LEAD/LAG MODE AND BE CONTROLLED BY THE DDC SYSTEM.
7. IF WATER FLOW FOR LEAD PUMP IS NOT PROVEN, AN ALARM SHALL BE ACTIVATED IN THE CHILLER CONTROL PANEL FOR FAILURE OF LEAD PUMP AND LAG PUMP SHALL BE STARTED.
8. IF WATER FLOW FOR LAG PUMP IS NOT PROVEN, AN ALARM SHALL BE ACTIVATED IN THE CHILLER CONTROL PANEL FOR FAILURE OF LAG PUMP AND CHILLER SHALL NOT START.
9. PUMPS SHALL BE OPERATED IN LEAD/LAG ARRANGEMENT TO ENSURE UNITS ARE OPERATED WITH EQUAL RUN TIME.

A1 HVAC - CHILLED WATER SCHEMATIC
NOT TO SCALE

SYM	DESCRIPTION	DATE	APPR

NAVFAC

LICENSED PROFESSIONAL ENGINEER JITENDRA VALMIK 062-072817 OF ILLINOIS
EXP: 11/30/2027
SIGNED: 03/11/2026

ASMD LLC.
AE INFO

APPROVED
FOR COMMANDER NAVFAC
ACTIVITY: NATHANIEL PYRON, MILCON PLANNER, DPPH
SATISFACTORY TO DATE 3/10/2026
DES JV | DRW AS | CHK AP
PM/DM DKS/DMK
BRANCH MANAGER KYM
CHIEF ENG/ARCH KYM
FIRE PROTECTION RYO

DEPARTMENT OF THE NAVY
NAVAL FACILITIES ENGINEERING SYSTEMS COMMAND
NAVFAC PACIFIC
U.S. NAVSUPPACT
NAVAL FACILITIES ENGINEERING SYSTEMS COMMAND – PACIFIC
MAKALAPA, HAWAII
MCB CAMP BLAZ, GUAM
JFY 2022 PROJECT J-875
BATTLE STAFF TRAINING FACILITY
HVAC SCHEMATICS - SHEET 4

SCALE: NTS
EPROJECT NO.: 1696746
CONSTR. CONTR. NO.
NAVFAC DRAWING NO. 17322128
SHEET 288 OF 468
MH603
DRAWFORM REVISION: 25 AUGUST 2020

3/11/2026 4:37:37 PM MH603
C:\REVIT_2024_PROJECT_FILES\BLDG-J875-1696746-M_7542_Jon_Koenig.rvt

AIR HANDLING UNIT - MODULAR (AHU) SCHEDULE

PLAN DESIGNATION	SERVICE	SUPPLY FAN							PRE-FILTER		FINAL FILTER		ELECTRICAL			NOTES
		AIRFLOW (CFM)	MINIMUM AIR (CFM)	EXTERNAL STATIC PRESSURE (IN.W.G.)	QTY.	RPM	TOTAL BRAKE POWER (Hp)	MOTOR POWER PER FAN (Hp)	TYPE	MERV	TYPE	MERV	VOLTAGE	HZ	PHASE	
AHU-01	1ST FLOOR	17,000	5,650	2.0	2	1991	18.8	10.0	PLEATED MEDIA	8	PLEATED MEDIA	13	460	60	3	(1) (2) (3) (4) (5)
AHU-2	2ND FLOOR	19,000	6,350	2.0	2	1766	20.7	15.0	PLEATED MEDIA	8	PLEATED MEDIA	13	460	60	3	(1) (2) (3) (4) (5)

NOTES:
1. SEE DRAWINGS FOR ARRANGEMENT
2. EXTERNAL STATIC PRESSURE INCLUDES FILTERS, DUCTWOR, AND COILS NOT IN AHU CASING
3. PROVIDE UNIT CAPABLE OF USE WITH VARIABLE SPEED DRIVE
4. SEE WATER COOLING COIL SCHEDULE FOR COOLING COIL PERFORMANCE
5. PROVIDE DIRECT DRIVE PLENUM TYPE FANS, MINIMUM QUANTITY AS NOTED IN SCHEDULE
6. AHU-4 MAX. OA=2,155 CFM & MIN. OA = 700 CFM
7. PROVIDE RESTRAINED SPRING ISOLATORS, 1.0" DEFLECTION, FOR ALL AHU UNITS.
8. PROVIDE FLEX DUCT CONNECTORS, FOR ALL AHU UNITS.

DEDICATED OUTDOOR AIR SYSTEM (DOAS) SCHEDULE

PLAN DESIGNATION	SERVICE	SUPPLY FAN							PRE-FILTER		FINAL FILTER		ELECTRICAL			NOTES
		AIRFLOW (CFM)	MINIMUM OUTDOOR AIR (CFM)	EXTERNAL STATIC PRESSURE (IN.W.G.)	QTY.	RPM	TOTAL BRAKE POWER (Hp)	MOTOR POWER PER FAN (Hp)	TYPE	MERV	TYPE	MERV	VOLTAGE	HZ	PHASE	
DOAS-01	AHU-1	5,000	1,665	2.0	2	3699	6.6	5.0	PLEATED MEDIA	8	PLEATED MEDIA	13	460	60	3	(1) (2) (3) (4) (5)
DOAS-02	AHU-2	5,350	1,830	2.0	2	3863	7.5	5.0	PLEATED MEDIA	8	PLEATED MEDIA	13	460	60	3	(1) (2) (3) (4) (5)

NOTES:
1. SEE DRAWINGS FOR ARRANGEMENT
2. EXTERNAL STATIC PRESSURE INCLUDES FILTERS, DUCTWORK, AND COILS NOT IN AHU CASING
3. PROVIDE UNIT CAPABLE OF USE WITH VARIABLE SPEED DRIVE
4. SEE HEATING COIL SCHEDULE FOR HEATING COIL PERFORMANCE
5. PROVIDE DIRECT DRIVE PLENUM TYPE FANS, MINIMUM QUANTITY AS NOTED IN SCHEDULE
6. PROVIDE RESTRAINED SPRING ISOLATORS, 1.0" DEFLECTION, FOR ALL AHU UNITS.
7. PROVIDE FLEX DUCT CONNECTORS, FOR ALL AHU UNITS.

WATER COOLING COIL (WCC) SCHEDULE

PLAN DESIGNATION	SERVICE	AIRSIDE											WATERSIDE							NOTES
		DESIGN AIRFLOW (CFM)	MINIMUM COIL AREA (FT²)	MAXIMUM FACE VELOCITY (FPM)	MAXIMUM APD (IN. W.G.)	MINIMUM ROWS	EAT DB (°F)	EAT WB (°F)	LAT DB (°F)	LAT WB (°F)	MINIMUM TOTAL COOLING CAPACITY (BTU/HR)	MINIMUM SENSIBLE COOLING CAPACITY (BTU/HR)	WATER FLOWRATE (GPM)	EWT (°F)	LWT (°F)	ACV SIZE (IN)	MAXIMUM PRESSURE DROP (FT.)			
																	COIL	ACV	TOTAL	
WCC-01	AHU-1	15,300	33.55	456	0.70	8	78.0	64.0	54.0	53.4	498.2	403.7	62.10	44.0	60.0	2"	5.0	5.0	10.0	(1) (2) (3) (4)
WCC-02	AHU-2	19,000	42.79	444	0.70	8	78.0	64.0	54.0	53.5	550.4	451.3	68.60	44.0	60.0	2"	5.0	5.0	10.0	(1) (2) (3) (4)
WCC-03	DOAS-01	5,000	12.32	406	1.20	8	86.9	78.7	54.0	53.9	440.4	184.0	54.80	44.0	60.0	2"	5.0	5.0	10.0	(1) (2) (3) (4) (5)
WCC-04	DOAS-02	5,350	12.30	435	1.40	8	86.9	78.7	54.0	53.9	471.3	196.9	58.70	44.0	60.0	2"	5.0	5.0	10.0	(1) (2) (3) (4) (5)

NOTES:
1. ACV ASSEMBLY INCLUDES AUTOMATIC CONTROL VALVE, LINE SIZE BALANCING VALVE, STRAINER, 2 ISOLATION VALVES, AND 6 ACV SIZE ELBOWS
2. ROUTE CONDENSATE DRAIN TO NEAREST FLOOR DRAIN
3. PROVIDE COIL COATING RATED FOR NO LESS THAN 5,000 HOUR SALT SPRAY TEST PER ASTM B117
4. PROVIDE AHU AND DOAS WITH COPPER FIN & COPPER TUBE COIL.
5. PROVIDE DOAS WITH COATED COPPER FINS & COATED COPPER TUBES.

CHILLER - AIR COOLED (CH) SCHEDULE

PLAN DESIGNATION	TYPE	FLOWRATE (GPM)	EVAPORATOR				MINIMUM TOTAL COOLING CAPACITY (MBH)	AMBIENT TEMPERATURE (°F)	CIRCUIT QTY.	REFRIGERANT	MAX. REFRIGERANT QTY. (LBS)	EER (AHRI)	IPLV (AHRI)	ELECTRICAL					NOTES
			SUPPLY TEMPERATURE (°F)	RETURN TEMPERATURE (°F)	MAX. PRESSURE DROP (FT.)	PASSES								MCA	MOCP	VOLTAGE	HZ	PHASE	
CH-01	AIR COOLED	136.40 GPM	44.0	60.0	7.0			95	2	R454B	138	10.73	16.83	182	225	460	60	3	(1) (2) (3) (4)
CH-02	AIR COOLED	136.40 GPM	44.0	60.0	7.0			95	2	R454B	138	10.73	16.83	182	225	460	60	3	(1) (2) (3) (4)

NOTES:
1. PROVIDE SINGLE POINT CONNECTION
2. PROVIDE UNIT MOUNTED DISCONNECT
3. PROVIDE COIL COATING RATED FOR NO LESS THAN 10,000 HOUR SALT SPRAY TEST PER MDACS
4. PROVIDE CHILLER WITH COPPER FIN & COPPER TUBE CONDENSER COIL PER MDACS.
5. PROVIDE NEOPRENEISOLATORS, MINIMUM 0.25" DEFLECTION, FOR ALL CHILLER UNITS.
6. PROVIDE FLEXIBLE PIPE CONNECTORS.

HEATING WATER COIL (HC) SCHEDULE

PLAN DESIGNATION	SERVICE	AIRSIDE								WATERSIDE							NOTES
		DESIGN AIRFLOW (CFM)	MINIMUM COIL AREA (FT²)	MAXIMUM FACE VELOCITY (FPM)	MAXIMUM APD (IN. W.G.)	MINIMUM ROWS	EAT DB (°F)	LAT DB (°F)	HEATING CAPACITY (MBh)	WATER FLOWRATE (GPM)	EWT (°F)	LWT (°F)	ACV SIZE (IN)	COIL WPD (FT)	ACV WPD (FT)	TOTAL WPD (FT)	
HC-01	DOAS-01	5,000	11.26	444	0.00	1	54.0	67.0	70.4	5.00	140.0	111.7	3/4"	0.1	5.0	5.1	(1) (2) (3) (4)
HC-02	DOAS-02	5,350	11.24	476	0.07	1	54.0	66.4	71.7	5.00	140.0	111.2	3/4"	0.1	5.0	5.1	(1) (2) (3) (4)

NOTES:
1. ACV ASSEMBLY INCLUDES AUTOMATIC CONTROL VALVE, LINE SIZE BALANCING VALVE, STRAINER, 2 ISOLATION VALVES, AND 6 ACV SIZE ELBOW
2. COIL SHALL BE SELECTED BASED ON ENTERING AND LEAVING AIR TEMPERATURES. HEATING CAPACITY PROVIDED FOR REFERENCE ONLY
3. PROVIDE DOAS WITH COPPER FIN & COPPER TUBE COIL PER MDACS.
4. PROVIDE COIL COATING RATED FOR NO LESS THAN 10,000 HRS. SALT SPRAY TEST PER MDACS

SYM	DESCRIPTION	DATE	APPR

NAVFAC

LICENSED PROFESSIONAL ENGINEER
JITENDRA VALMIK
062-072817
OF ILLINOIS
EXP: 11/30/2027
SIGNED: 03/11/2026

ASMD LLC.

APPROVED
FOR COMMANDER NAVFAC
ACTIVITY
NATHANIEL PYRON, MILCON PLANNER, DPPH
SATISFACTORY TO DATE 3/10/2026
DES JV DRW AS CHK AP
PM/DM DKS/DMK
BRANCH MANAGER KYM
CHIEF ENG/ARCH KYM
FIRE PROTECTION RYO

DEPARTMENT OF THE NAVY
NAVAL FACILITIES ENGINEERING SYSTEMS COMMAND
NAVFAC PACIFIC
NAVAL FACILITIES ENGINEERING SYSTEMS COMMAND – PACIFIC
MAKALAPA, HAWAII
U.S. NAVSUPPACT
MCB CAMP BLAZ, GUAM
JFY 2022 PROJECT J-875
BATTLE STAFF TRAINING FACILITY
MECHANICAL SCHEDULES - SHEET 1

SCALE: NTS
EPROJECT NO.: 1696746
CONSTR. CONTR. NO.
NAVFAC DRAWING NO. 17322129
SHEET 289 OF 468
MH700
DRAWFORM REVISION: 25 AUGUST 2020

3/11/2026 4:37:40 PM MH700
C:\REVIT_2024_PROJECT_FILES\BLDG-J875-1696746-M_7542_Jon_Koenig.rvt

DEDICATED HEAT RECOVERY CHILLER (DHRC) SCHEDULE

PLAN DESIGNATION	COOLING PERFORMANCE					HEATING PERFORMANCE					COMPRESSOR		REFRIG.	REFRIG. QTY (LBS)	ELECTRICAL					NOTES
	EWT (°F)	LWT (°F)	FLOW RATE (GPM)	MAXIMUM PRESSURE DROP (FT.)	EER (AHRI)	EWT (°F)	LWT (°F)	COP (AHRI)	FLOW RATE (GPM)	MAXIMUM PRESSURE DROP (FT.)	QTY	RLA (AMPS/EA)			MCA	MOCP	VOLTAGE	HZ	PHASE	
DHRC-1	60	44	30.7	4.2	8.083	118	140	3.273	31.0	2.8	2	28.2	R454B	16.0	49	60	460	60	3	(1)

NOTES:
1. UNIT IS ONE MODULE ON RESTRAINED SPRING ISOLATORS, 1.0" DEFLECTION.

PUMP (P) SCHEDULE

PLAN DESIGNATION	TYPE	SYSTEM	FLOW RATE (GPM)	OPERATING HEAD (FT.)	MAX. NPSHR (FT.)	EFFICIENCY (%)	IMPELLER DIA. (in.)	PUMP SPEED	BRAKE POWER (HP)	MOTOR POWER (HP)	ELECTRICAL			DISCHARGE SIZE (IN.)	SUCTION SIZE (IN.)	NOTES
											VOLTAGE	HZ	PHASE			
CHWP-1A	VERTICAL CENTRIFUGAL IN-LINE	PRIMARY CHILLED WATER	137	55	5.16	62.1	8.25	1800	3.0	5.0	460	60	3	2 1/2"	2 1/2"	(1) (2) (3)
CHWP-1B	VERTICAL CENTRIFUGAL IN-LINE	PRIMARY CHILLED WATER	137	55	5.16	62.1	8.25	1800	3.0	5.0	460	60	3	2 1/2"	2 1/2"	(1) (2) (3)
CHWP-1C	VERTICAL CENTRIFUGAL IN-LINE	PRIMARY CHILLED WATER	137	55	5.16	62.1	8.25	1800	3.0	5.0	460	60	3	2 1/2"	2 1/2"	(1) (2) (3)
CHWP-2A	VERTICAL CENTRIFUGAL IN-LINE	SECONDARY CHILLED WATER	31	20	3.27	63.7	5.125	1800	0.3	0.5	460	60	1	1 1/4"	1 1/4"	(1) (2) (3)
CHWP-2B	VERTICAL CENTRIFUGAL IN-LINE	SECONDARY CHILLED WATER	31	20	3.27	63.7	5.125	1800	0.3	0.5	460	60	1	1 1/4"	1 1/4"	(1) (2) (3)
CHWP-2C	VERTICAL CENTRIFUGAL IN-LINE	SECONDARY CHILLED WATER	31	15	3.67	64.5	4.375	1800	0.2	0.3	208	60	3	1 1/4"	1 1/4"	(1) (2) (3)
HWP-1A	VERTICAL CENTRIFUGAL IN-LINE	HEATING HOT WATER	31	15	3.67	64.5	4.375	1800	0.2	0.3	208	60	3	1 1/4"	1 1/4"	(1) (2) (3)
HWP-1B	VERTICAL CENTRIFUGAL IN-LINE	HEATING HOT WATER	31	20	3.27	63.7	5.125	1800	0.3	0.5	460	60	1	1 1/4"	1 1/4"	(1) (2) (3)
HWP-1C	VERTICAL CENTRIFUGAL IN-LINE	HEATING HOT WATER	31	20	3.27	63.7	5.125	1800	0.3	0.5	460	60	1	1 1/4"	1 1/4"	(1) (2) (3)

NOTES:
1. PROVIDE BRONZE FITTED PUMP
2. PROVIDE FLUSHED MECHANICAL SEAL
3. PROVIDE PUMP WITH INVERTER DUTY MOTOR FOR USE WITH VARIABLE SPEED DRIVE
4. PROVIDE RESTRAINED SPRING ISOLATORS, 1.0" DEFLECTION, FOR 5HP PUMPS CHWP-1A/B.
5. PROVIDE FLEXIBLE PIPE CONNECTIONS, FOR ALL PUMPS.

BLOWER COIL (BCHD) SCHEDULE

PLAN DESIGNATION	UNIT ARRANGEMENT	SUPPLY FAN				WATER COOLING COIL											FILTER		ELECTRICAL			NOTES
		AIRFLOW (CFM)	EXTERNAL STATIC PRESSURE (IN. W.G.)	BRAKE POWER (Hp)	MOTOR POWER (Hp)	EAT DB (°F)	EAT WB (°F)	LAT DB (°F)	LAT WB (°F)	FLOWRATE (GPM)	EWT (°F)	LWT (°F)	ACV SIZE (IN)	MAX. PRESSURE DROP (FT)			TYPE	MERV	VOLTAGE	HZ	PHASE	
														COIL	ACV	TOTAL						
BCHD-101	ABOVE CEILING EXPOSED	1000	0.75	0.492	0.55	78.0	65.0	57.5	55.9	4.36	44.0	57.5	1/2"	5.0	5.0	10.0	THROW AWAY	8	115	60	1	(1) (2) (3) (4) (5)
BCHD-102	ABOVE CEILING EXPOSED	1000	0.75	0.492	0.55	78.0	65.0	57.5	55.9	4.36	44.0	57.5	1/2"	5.0	5.0	10.0	THROW AWAY	8	115	60	1	(1) (2) (3) (4) (5)
BCHD-103	ABOVE CEILING EXPOSED	1000	0.75	0.492	0.55	78.0	65.0	57.5	55.9	4.36	44.0	57.5	1/2"	5.0	5.0	10.0	THROW AWAY	8	115	60	1	(1) (2) (3) (4) (5)
BCHD-104	ABOVE CEILING EXPOSED	250	0.75	0.091	0.55	78.0	65.0	55.3	53.8	2.40	44.0	51.4	1/2"	5.0	5.0	10.0	THROW AWAY	8	115	60	1	(1) (2) (3) (4) (5)
BCHD-105	ABOVE CEILING EXPOSED	250	0.75	0.091	0.55	78.0	65.0	55.3	53.8	2.40	44.0	51.4	1/2"	5.0	5.0	10.0	THROW AWAY	8	115	60	1	(1) (2) (3) (4) (5)

NOTES:
1. PROVIDE UNIT MOUNTED DISCONNECT SWITCH
2. EXTERNAL STATIC PRESSURE INCLUDES FILTER, AND DUCTWORK NOT IN CASING
3. ACV ASSEMBLY INCLUDES AUTOMATIC CONTROL VALVE, LINE SIZE BALANCING VALVE, STRAINER, 2 ISOLATION VALVES, AND 6 ACV SIZE ELBOWS
4. COIL SHALL BE SELECTED BASED ON ENTERING AND LEAVING AIR TEMPERATURES
5. PROVIDE ECM FAN MOTOR
6. PROVIDE RESTRAINED SPRING ISOLATORS, 1.0" DEFLECTION, FOR ALL AHU UNITS.
7. PROVIDE FLEX DUCT CONNECTORS, FOR ALL AHU UNITS.

SYM	DESCRIPTION	DATE	APPR

NAVFAC

LICENSED PROFESSIONAL ENGINEER
JITENDRA VALMIK
062-072817
OF ILLINOIS
EXP: 11/30/2027
SIGNED: 03/11/2026

ASMD LLC.

APPROVED
FOR COMMANDER NAVFAC
ACTIVITY
NATHANIEL PYRON, MILCON PLANNER, DPPH
SATISFACTORY TO DATE 3/10/2026
DES JV DRW AS CHK AP
PM/DM DKS/DMK
BRANCH MANAGER KYM
CHIEF ENG/ARCH KYM
FIRE PROTECTION RYO

DEPARTMENT OF THE NAVY
NAVAL FACILITIES ENGINEERING COMMAND
NAVFAC PACIFIC
NAVAL FACILITIES ENGINEERING SYSTEMS COMMAND ~ PACIFIC
MAKALAPA, HAWAII
U.S. NAVSUPPACT
MCB CAMP BLAZ, GUAM
JFY 2022 PROJECT J-875
BATTLE STAFF TRAINING FACILITY
MECHANICAL SCHEDULES - SHEET 2

SCALE: NTS
EPROJECT NO.: 1696746
CONSTR. CONTR. NO.
NAVFAC DRAWING NO. 17322130
SHEET 290 OF 468
MH701
DRAWFORM REVISION: 25 AUGUST 2020

3/11/2026 4:37:43 PM MH701
C:\REVIT_2021_PROJECT_FILES\BLDG-J875-1696746-M_7542_Jon_Koenig.rvt

1ST FLOOR VARIABLE AIR VOLUME BOX (VAV) SCHEDULE

PLAN DESIGNATION	DESIGN FLOW RATE (CFM)	MINIMUM FLOW RATE (CFM)	INLET CONNECTION DIAMETER	MAXIMUM AIR PRESSURE DROP (in.w.g.)	RE-HEAT CAPACITY (MBH)	EAT (°F)	LAT (°F)	FLOW RATE (GPM)	EWT (°F)	LWT (°F)	REHEAT COIL				NOTES
											ACV SIZE	MAXIMUM WATER PRESSURE DROP			
												COIL	ACV	TOTAL	
VAV-101	300	100	6"	0.25	2.2	58	78	0.2	140	120	1/2"	5	5	10	(1) (2)
VAV-102	1000	335	10"	0.25	7.2	58	78	0.7	140	120	1/2"	5	5	10	(1) (2)
VAV-103	250	85	6"	0.25	1.8	58	78	0.2	140	120	1/2"	5	5	10	(1) (2)
VAV-104	200	70	6"	0.25	1.5	58	78	0.2	140	120	1/2"	5	5	10	(1) (2)
VAV-105	600	200	8"	0.25	4.3	58	78	0.4	140	120	1/2"	5	5	10	(1) (2)
VAV-106	775	225	10"	0.25	4.9	58	78	0.5	140	120	1/2"	5	5	10	(1) (2)
VAV-107	800	270	10"	0.25	5.8	58	78	0.6	140	120	1/2"	5	5	10	(1) (2)
VAV-108	700	235	8"	0.25	5.1	58	78	0.5	140	120	1/2"	5	5	10	(1) (2)
VAV-109	700	235	8"	0.25	5.1	58	78	0.5	140	120	1/2"	5	5	10	(1) (2)
VAV-110	700	235	8"	0.25	5.1	58	78	0.5	140	120	1/2"	5	5	10	(1) (2)
VAV-111	1200	400	12"	0.25	8.6	58	78	0.9	140	120	1/2"	5	5	10	(1) (2)
VAV-112	700	235	8"	0.25	5.1	58	78	0.5	140	120	1/2"	5	5	10	(1) (2)
VAV-113	700	235	8"	0.25	5.1	58	78	0.5	140	120	1/2"	5	5	10	(1) (2)
VAV-114	800	270	10"	0.25	5.8	58	78	0.6	140	120	1/2"	5	5	10	(1) (2)
VAV-115	0	135	6"	0.25	2.9	58	78	0.3	140	120	1/2"	5	5	10	(1) (2)
VAV-116	100	85	6"	0.25	1.8	58	78	0.2	140	120	1/2"	5	5	10	(1) (2)
VAV-117	450	160	8"	0.25	2.6	58	78	0.3	140	120	1/2"	5	5	10	(1) (2)
VAV-118	500	170	8"	0.25	3.7	58	78	0.4	140	120	1/2"	5	5	10	(1) (2)
VAV-119	725	255	8"	0.25	5.2	58	78	0.5	140	120	1/2"	5	5	10	(1) (2)
VAV-120	1400	470	12"	0.25	10.2	58	78	1.0	140	120	1/2"	5	5	10	(1) (2)
VAV-121	525	175	8"	0.25	3.8	58	78	0.4	140	120	1/2"	5	5	10	(1) (2)
VAV-122	500	170	8"	0.25	3.7	58	78	0.4	140	120	1/2"	5	5	10	(1) (2)
VAV-123	750	250	8"	0.25	5.4	58	78	0.5	140	120	1/2"	5	5	10	(1) (2)
VAV-124	1000	335	10"	0.25	7.2	58	78	0.7	140	120	1/2"	5	5	10	(1) (2)
VAV-125	550	170	8"	0.25	4.0	58	78	0.4	140	120	1/2"	5	5	10	(1) (2)
VAV-126	500	170	8"	0.25	3.7	58	78	0.4	140	120	1/2"	5	5	10	(1) (2)

NOTES:
1. PRESSURE INDEPENDENT VAV BOX
2. VAV LINING AND REQUIREMENTS TO BECOORDINATED WITH ACOUSTIC CONSULTANT.

2ND FLOOR VARIABLE AIR VOLUME BOX (VAV) SCHEDULE

PLAN DESIGNATION	DESIGN FLOW RATE (CFM)	MINIMUM FLOW RATE (CFM)	INLET CONNECTION DIAMETER	MAXIMUM AIR PRESSURE DROP (in.w.g.)	RE-HEAT CAPACITY (MBH)	EAT (°F)	LAT (°F)	FLOW RATE (GPM)	EWT (°F)	LWT (°F)	REHEAT COIL				NOTES
											ACV SIZE	MAXIMUM WATER PRESSURE DROP			
												COIL	ACV	TOTAL	
VAV-201	500	170	8"	0.25	3.7	58	78	0.4	140	120	1/2"	5	5	10	(1) (2)
VAV-202	1100	370	10"	0.25	8.0	58	78	0.8	140	120	1/2"	5	5	10	(1) (2)
VAV-203	700	235	8"	0.25	5.1	58	78	0.5	140	120	1/2"	5	5	10	(1) (2)
VAV-204	900	300	10"	0.25	6.5	58	78	0.6	140	120	1/2"	5	5	10	(1) (2)
VAV-205	700	235	8"	0.25	5.1	58	78	0.5	140	120	1/2"	5	5	10	(1) (2)
VAV-206	700	235	8"	0.25	5.1	58	78	0.5	140	120	1/2"	5	5	10	(1) (2)
VAV-207	900	300	10"	0.25	6.5	58	78	0.6	140	120	1/2"	5	5	10	(1) (2)
VAV-208	700	235	8"	0.25	5.1	58	78	0.5	140	120	1/2"	5	5	10	(1) (2)
VAV-209	700	235	8"	0.25	5.1	58	78	0.5	140	120	1/2"	5	5	10	(1) (2)
VAV-210	1000	335	10"	0.25	7.2	58	78	0.7	140	120	1/2"	5	5	10	(1) (2)
VAV-211	450	150	8"	0.25	3.2	58	78	0.3	140	120	1/2"	5	5	10	(1) (2)
VAV-212	1075	360	10"	0.25	7.8	58	78	0.8	140	120	1/2"	5	5	10	(1) (2)
VAV-213	0	100	6"	0.25	2.2	58	78	0.2	140	120	1/2"	5	5	10	(1) (2)
VAV-214	250	85	6"	0.25	1.8	58	78	0.2	140	120	1/2"	5	5	10	(1) (2)
VAV-215	0	135	6"	0.25	2.9	58	78	0.3	140	120	1/2"	5	5	10	(1) (2)
VAV-216	450	150	8"	0.25	3.2	58	78	0.3	140	120	1/2"	5	5	10	(1) (2)
VAV-217	350	120	6"	0.25	2.6	58	78	0.3	140	120	1/2"	5	5	10	(1) (2)
VAV-218	450	150	8"	0.25	3.7	58	78	0.4	140	120	1/2"	5	5	10	(1) (2)
VAV-219	600	200	8"	0.25	4.3	58	78	0.4	140	120	1/2"	5	5	10	(1) (2)
VAV-220	825	290	10"	0.25	6.0	58	78	0.5	140	120	1/2"	5	5	10	(1) (2)
VAV-221	600	200	8"	0.25	4.3	58	78	0.4	140	120	1/2"	5	5	10	(1) (2)
VAV-222	975	320	10"	0.25	7.0	58	78	0.7	140	120	1/2"	5	5	10	(1) (2)
VAV-223	900	300	8"	0.25	6.5	58	78	0.6	140	120	1/2"	5	5	10	(1) (2)
VAV-224	700	235	8"	0.25	5.1	58	78	0.5	140	120	1/2"	5	5	10	(1) (2)
VAV-225	700	235	8"	0.25	5.4	58	78	0.5	140	120	1/2"	5	5	10	(1) (2)
VAV-226	700	235	8"	0.25	5.1	58	78	0.5	140	120	1/2"	5	5	10	(1) (2)
VAV-227	700	235	8"	0.25	5.1	58	78	0.5	140	120	1/2"	5	5	10	(1) (2)
VAV-228	900	235	10"	0.25	6.5	58	78	0.6	140	120	1/2"	5	5	10	(1) (2)

NOTES:
1. PRESSURE INDEPENDENT VAV BOX
2. VAV LINING AND REQUIREMENTS TO BECOORDINATED WITH ACOUSTIC CONSULTANT.

EXHAUST FAN (EF) SCHEDULE

PLAN DESIGNATION	TYPE	AREA SERVED	DESIGN AIR FLOW (CFM)	FAN ESP (IN. W.G.)	RPM	DRIVE TYPE	BRAKE POWER (Hp)	MOTOR POWER (Hp)	ELECTRICAL			SOUND LEVEL (SONES)	ACCESSORIES	NOTES
									VOLTAGE	HZ	PHASE			
EF-101	IN LINE CENTRIFUGAL	ELECTRICAL ROOM	500	0.5	1712	DIRECT	0.21	0.25	115	60	1	0		
EF-102	IN LINE CENTRIFUGAL	MECH. ROOM 1ST FLOOR	500	0.5	1712	DIRECT	0.21	0.25	115	60	1	0		
EF-103	IN LINE CENTRIFUGAL	TRAINING PAD 119	1200	0.5	1497	DIRECT	0.31	0.5	115	60	1	0		
EF-104	IN LINE CENTRIFUGAL	BATHROOM FIRST FLOOR	1850	0.5	990	DIRECT	0.36	0.75	115	60	1	0		
EF-144	IN LINE CENTRIFUGAL	GENERATOR ROOM	850	0.5	1219	DIRECT	0.17	0.5	115	60	1	8.9	(A) (B) (C) (D) (E) (F) (G)	(1) (2)
EF-201	IN LINE CENTRIFUGAL	BATHROOM/GEN 2ND FLOOR	2025	0.5	1039	DIRECT	0.42	0.75	115	60	1	0		
EF-202	IN LINE CENTRIFUGAL	MECH. ROOM 2ND FLOOR	450	0.5	1691	DIRECT	0.13	0.16	115	60	1	0		

ACCESSORIES:
A. PROVIDE UNIT MOUNTED DISCONNECT SWITCH
B. PROVIDE GRAVITY BACK DRAFT DAMPER
C. PROVIDE UNIT MOUNTED FAN SPEED CONTROLLER FOR SYSTEM BALANCING
D. PROVIDE MOUNTING CLIPS
E. PROVIDE HANGING VIBRATION ISOLATORS
F. PROVIDE DUCT MOUNTING FLANGES
G. PROVIDE FLEXIBLE DUCT CONNECTOR

NOTES:
1. AMCA TYPE B SPARK RESISTANT CONSTRUCTION
2. FAN SHALL BE INTERLOCKED TO OPERATE WITH LIFE SAFETY SENSOR SET FOR LEL LEVEL LISTED AND DESIGNATED FOR SERVICE
3. PROVIDE NEOPRENE HANGERS, 0.25" DEFLECTION.
4. PROVIDE FLEXIBLE DUCT CONNECTORS.

PART OF OPTION ITEM #2

SYM	DESCRIPTION	DATE	APPR

NAVFAC

LICENSED PROFESSIONAL ENGINEER
JITENDRA VALMIK
062-072817
OF ILLINOIS
EXP: 11/30/2027
SIGNED: 03/11/2026

ASMD LLC.

APPROVED
FOR COMMANDER NAVFAC

ACTIVITY
NATHANIEL PYRON, MILCON PLANNER, DPPH

SATISFACTORY TO DATE 3/10/2026

DES	JV	DRW	AS	CHK	AP
PMDM	DKS/DMK				
BRANCH MANAGER	KYM				
CHIEF ENG/ARCH	KYM				
FIRE PROTECTION	RYO				

DEPARTMENT OF THE NAVY
NAVAL FACILITIES ENGINEERING SYSTEMS COMMAND
NAVFAC PACIFIC
U.S. NAVSUPPACT

NAVAL FACILITIES ENGINEERING SYSTEMS COMMAND ~ PACIFIC
MAKALAPA, HAWAII

MCB CAMP BLAZ, GUAM

JFY 2022 PROJECT J-875
BATTLE STAFF TRAINING FACILITY

MECHANICAL SCHEDULES - SHEET 3

SCALE: NTS
EPROJECT NO.: 1696746
CONSTR. CONTR. NO.
NAVFAC DRAWING NO. 17322131
SHEET 291 OF 468

MH702

DRAWFORM REVISION: 25 AUGUST 2020

3/11/2026 4:37:46 PM MH702
C:\REVIT_2024_PROJECT_FILES\BLDG-J-875-1696746-M_7542_Jon_Koenig.rvt

COMPUTER ROOM AIR CONDITIONING UNIT- CHILLED WATER (CRAC-CW) SCHEDULE

PLAN DESIGNATION	SERVICE	SUPPLY FAN			WATER COOLING COIL											FILTER		ELECTRICAL			NOTES
		AIRFLOW (CFM)	EXTERNAL STATIC PRESSURE (IN.W.G.)	FAN MOTOR POWER (HP)	EAT DB (°F)	EAT WB (°F)	LAT DB (°F)	LAT WB (°F)	TOTAL CAPACITY (MBH)	SENSIBLE CAPACITY (MBH)	FLOWRATE (GPM)	EWT (°F)	LWT (°F)	ACV SIZE (IN)	MAXIMUM PRESSURE DROP (FT.) TOTAL	TYPE	MERV	VOLTAGE	HZ	PHASE	
CRAC-101	GTR 1 ROOM 115	5550	0.3	4.0	78.0	64.9	57.3	55.4	155	120	20.6	44.0	60.0	1 1/2"	7.2	PLEATED MEDIA	8	460	60	3	(1) (2) (3) (4) (5) (6) (7) (8) (9) (10) (11) (12)
CRAC-102	GTR 1T ROOM 116	5550	0.3	4.0	78.0	64.9	57.3	55.4	155	120	20.6	44.0	60.0	1 1/2"	7.2	PLEATED MEDIA	8	460	60	3	(1) (2) (3) (4) (5) (6) (7) (8) (9) (10) (11) (12)
CRAC-103	GTR 1T ROOM 116	5550	0.3	4.0	78.0	64.9	57.3	55.4	155	120	20.6	44.0	60.0	1 1/2"	7.2	PLEATED MEDIA	8	460	60	3	(1) (2) (3) (4) (5) (6) (7) (8) (9) (10) (11) (12)
CRAC-201	GTR 2 ROOM 213	9400	0.3	6.0	78.0	64.9	63.3	59.8	146	144	20.3	44.0	60.0	1 1/2"	7.2	PLEATED MEDIA	8	460	60	3	(1) (2) (3) (4) (5) (6) (7) (8) (9) (10) (11) (12)
CRAC-202	GTR 2T ROOM 214	9400	0.3	6.0	78.0	64.9	63.3	59.8	146	144	20.3	44.0	60.0	1 1/2"	7.2	PLEATED MEDIA	8	460	60	3	(1) (2) (3) (4) (5) (6) (7) (8) (9) (10) (11) (12)
CRAC-203	GTR 2T ROOM 214	9400	0.3	6.0	78.0	64.9	63.3	59.8	146	144	20.3	44.0	60.0	1 1/2"	7.2	PLEATED MEDIA	8	460	60	3	(1) (2) (3) (4) (5) (6) (7) (8) (9) (10) (11) (12)

NOTES:
1. EXTERNAL STATIC PRESSURE INCLUDES FILTERS, DUCTWORK, AND COILS NOT IN UNIT CASING
2. PROVIDE UNIT MOUNTED DISCONNECT SWITCH
3. PROVIDE ELECTRONIC CONDENSATE OVERFLOW PROTECTION
4. PROVIDE BACNET MS/TP INTERFACE
5. PROVIDE WITH NO REHEAT AND HUMIDIFICATION
6. PROVIDE CONDENSATE PUMP
7. PROVIDE LEAK DETECTION SENSOR
8. PROVIDE 24" FLOORSTAND
9. PROVIDE BASE SENSORS (FILTER CLOG AND HIGH TEMP)
10. PROVIDE FILTER BOX
11. PROVIDE CONTROLS
12. PROVIDE DOWNFLOW UNIT
13. PROVIDE SEISMIC + NEOPRENE VIBRATION ISOLATION MOUNT STAND, 0.20" DEFLECTION, FOR ALL CRAC UNITS.

EXPANSION TANK (ET) SCHEDULE

PLAN DESIGNATION	SERVICE	TYPE	MIN TANK VOLUME (GAL)	MIN ACCEPTANCE VOLUME (GAL)	TANK RATED PRESSURE (PSIG)	MIN SYSTEM TEMPERATURE (°F)	MAX SYSTEM TEMPERATURE (°F)	MIN SYSTEM PRESSURE (PSIG)	MAX SYSTEM PRESSURE (PSIG)	SET PRESSURE (PSIG)	NOTES
ET-1	CHILLED WATER	ASME BLADDER TYPE	53.0	53.0	125.0	120.0	140.0	19.7	112.5	19.7	(1) (2)
ET-2	HEATING WATER	ASME BLADDER TYPE	53.0	53.0	125.0	120.0	140.0	19.7	112.5	19.7	(1) (2)

NOTES:
1. CONSTRUCTED IN ACCORDANCE WITH ASME SECTION VIII DIVISION 1
2. ROUTE DRAINS TO NEAREST FLOOR DRAIN

AIR SEPARATOR (AS) SEPARATOR SCHEDULE

PLAN DESIGNATION	DESCRIPTION	SYSTEM SERVED	FLOWRATE (GPM)	PIPE SIZE (IN.)	MAX. PRESSURE DROP (FT)	NOTES
AS-1	AIR SEPERATOR FLANGED WITH STRAINER	CHILLED WATER	438.0	3"	0.6	(1) (2) (3)
AS-2	AIR SEPERATOR FLANGED WITH STRAINER	HEATING WATER	46.5	3"	0.1	(1) (2) (3)

NOTES:
1. PROVIDE BLOWDOWN CONNECTION ON BOTTOM OF VESSEL
2. PROVIDE AIR VENT CONNECTION ON TOP OF VESSEL
3. PROVIDE LIFTING LUGS

GRILLE, REGISTER, & DIFFUSER (GRD) SCHEDULE

PLAN DESIGNATION	DESCRIPTION	MATERIAL	MOUNTING	DEFLECTION	MAXIMUM PRESSURE DROP (IN. W.G.)	MAXIMUM NC LEVEL	FACE HEIGHT (IN)	FACE WIDTH (IN)	FINISH	NOTES
	SQUARE 3-CONE DIFFUSSER	ALUMINUM	LAY IN	FOUR WAY PATTERN	0.1	30			WHITE	
EG-1	EXHAUST GRILLE	ALUMINUM	SURFACE	35	0.1	30			WHITE	(2) (3) (4)
EG-2	EXHAUST GRILLE	ALUMINUM	SURFACE	FIXED	0.1	30			WHITE	(1) (2)
RD-1	HIGH PERFORMANCE SQUARE CONE DIFFUSER	ALUMINUM	SURFACE	FIXED	0.1	30			WHITE	(1) (2)
RG-1	RETURN GRILLE	ALUMINUM	DUCT	35	0.1	30			WHITE	(2) (3) (4)
SD-1	HIGH PERFORMANCE SQUARE CONE DIFFUSER	ALUMINUM	SURFACE	FIXED	0.1	30			WHITE	(1) (2)
SG-1	DOUBLE DEFLECTION SUPPLY GRILLE	ALUMINUM	DUCT	45	0.1	30			WHITE	<varies>

NOTES:
1. DIFFUSER, GRILLE, OR REGISTER SHALL BE SUITABLE FOR INSTALLATION IN CEILING SYSTEM SUPPORTED INDEPENDENTLY OF CEILING GRID
2. SEE PLANS FOR DUCT CONNECTION SIZE
3. DIFFUSER, GRILLE, OR REGISTER MUST BE SUITABLE FOR DUCT MOUNTING
4. DIFFUSER, GRILLE, OR REGISTER MUST BE SUITABLE FOR SURFACE MOUNTING

SYM	DESCRIPTION	DATE	APPR

NAVFAC

LICENSED PROFESSIONAL ENGINEER
JITENDRA VALMIK
062-072817
OF ILLINOIS
EXP: 11/30/2027
SIGNED: 03/11/2026

ASMD LLC.
A/E INFO

APPROVED
FOR COMMANDER NAVFAC
ACTIVITY
NATHANIEL PYRON, MILCON PLANNER, DPPH
SATISFACTORY TO DATE 3/10/2026
DES JV DRW AS CHK AP
PM/DM DKS/DMK
BRANCH MANAGER KYM
CHIEF ENG/ARCH KYM
FIRE PROTECTION RYO

DEPARTMENT OF THE NAVY
NAVAL FACILITIES ENGINEERING SYSTEMS COMMAND
NAVFAC PACIFIC
U.S. NAVSUPPACT
NAVAL FACILITIES ENGINEERING SYSTEMS COMMAND – PACIFIC
MAKALAPA, HAWAII
MCB CAMP BLAZ, GUAM
JFY 2022 PROJECT J-875
BATTLE STAFF TRAINING FACILITY
MECHANICAL SCHEDULES - SHEET 4

SCALE: NTS
EPROJECT NO.: 1696746
CONSTR. CONTR. NO.
NAVFAC DRAWING NO. 17322132
SHEET 292 OF 468
MH703
DRAWFORM REVISION: 25 AUGUST 2020

3/11/2026 4:37:49 PM MH703
C:\REVIT_2024_PROJECT_FILES\BLDG-J875-1696746-M_7542_Jon_Koenig.rvt

LOUVER (LVR) SCHEDULE

PLAN DESIGNATION	SERVICE	TYPE	DESIGN AIRFLOW (CFM)	MAXIMUM FREE AREA VELOCITY (FPM)	MINIMUM FREE AREA (FT^2)	MAXIMUM AIR PRESSURE DROP (IN. W.G.)	FACE WIDTH (IN)	FACE HEIGHT (IN)	NOTES
LVR-102	DOAS-1 INTAKE	STATIONARY	5,000	395.07	7.72	0.1	4' - 6"	3' - 6"	(1) (2) (3) (4)
LVR-103	1ST FLOOR MECHANICAL ROOM 119	STATIONARY	500	510.20	0.98	0.0	1' - 6"	1' - 4"	(1) (2) (3) (4)
LVR-104	1ST FLOOR ELECTRICAL ROOM	STATIONARY	500	510.20	0.98	0.0	1' - 6"	1' - 4"	(1) (2) (3) (4)
LVR-105	TRAINING PAD ROOM 109	STATIONARY	1,200	667.90	1.80	0.0	1' - 10"	2' - 0"	(1) (2) (3) (4)
LVR-106	1ST FLOOR BATHROOM EXHAUST	STATIONARY	1,850	629.25	2.94	0.0	3' - 0"	2' - 0"	(1) (2) (3) (4)
LVR-107	GENERATOR EXHAUST	STATIONARY	7,600	1034.01	7.35	0.0	5' - 0"	3' - 0"	(1) (2) (3) (4)
LVR-108	GENERATOR INTAKE	STATIONARY	7,600	99.01	9.80	0.0	5' - 0"	4' - 0"	(1) (2) (3) (4)
LVR-201	2ND FLOOR BATHROOM - EXHAUST	STATIONARY	2,025	688.78	2.94	0.0	3' - 0"	2' - 0"	(1) (2) (3) (4)
LVR-202	DOAS-02 INTAKE	STATIONARY	5,350	99.01	7.72	0.0	4' - 6"	3' - 6"	(1) (2) (3) (4)
LVR-203	2ND FLOOR MECHANICAL ROOM 217	STATIONARY	450	459.18	0.98	0.0	1' - 6"	1' - 4"	(1) (2) (3) (4)

NOTES:
1. PROVIDE STAINLESS STEEL BIRD SCREEN
2. COLOR SELECTED BY ARCHITECT
3. PROVIDE ACOUSTICAL LOUVER, 8" DEP, PER SPECIFICATIONS AND PERFORMANCE.
4. MINIMUM INSERSION LOSS: 63-2, 125-3, 250-5, 500-9, 1000-14, 2000-15, 4000-10, 8000-9

DUCTWORK PRESSURE CLASS AND SEAL CLASS SCHEDULE

SYSTEM	DUCT PRESSURE MODE	DUCT PRESSURE CLASS	DUCT SEAL CLASS	DUCT LEAKAGE CLASS
VAV SUPPLY DUCT (ROUND/OVAL DUCT)	POS	6	A	2
VAV SUPPLY DUCT (RECTANGULAR DUCT)	POS	6	A	4
CONSTANT VOLUME SUPPLY DUCT (ROUND/OVAL DUCT)	POS	6	A	2
CONSTANT VOLUME SUPPLY DUCT (RECTANGULAR DUCT)	POS	6	A	4
EXHAUST DUCT (EXCEPT PURGE AIR EXHAUST)	NEG	2	A	4
PURGE AIR EXHAUST DUCT	NEG	6	A	4
RETURN DUCT	NEG	2	A	4
OUTDOOR AIR DUCT	NEG	2	A	4

NOTES:
1. DUCT PRESSURE CLASS PER SMACNA DUCT CONSTRUCTION MANUAL.
2. DUCT LEAKAGE CLASS PER SMACNA HVAC AIR DUCT LEAKAGE TEST MANUAL.
3. DUCT SEAL CLASS PER ASHRAE 90.1-2013 UNLESS OTHERWISE SPECIFIED
4. TEST IN ACCORDANCE WITH SPECIFICATION SECTION 23 05 93, HVAC TESTING , ADJUSTING AND BALANCING AND THE PROCDURES IN SMACNA HVAC AIR DUCT LEAKAGE MANUAL.

LOUVER (LVR) SCHEDULE - FUEL TANK AREA

PLAN DESIGNATION	SERVICE	TYPE	DESIGN AIRFLOW (CFM)	MAXIMUM FREE AREA VELOCITY (FPM)	MINIMUM FREE AREA (FT^2)	MAXIMUM AIR PRESSURE DROP (IN. W.G.)	FACE WIDTH (IN)	FACE HEIGHT (IN)	NOTES
LVR-212	GENERATOR EXHAUST	STATIONARY	41,500	1008.26	41.16	0.1	12' - 0"	7' - 0"	(1) (2)
LVR-213	GENERATOR INTAKE	STATIONARY	22,300	700.15	31.85	0.4	10' - 0"	6' - 6"	(1) (2) (3) (4)
LVR-214	GENERATOR INTAKE	STATIONARY	22,300	700.15	31.85	0.4	10' - 0"	6' - 6"	(1) (2) (3) (4)

NOTES:
1. PROVIDE STAINLESS STEEL BIRD SCREEN
2. COLOR SELECTED BY ARCHITECT
3. PROVIDE ACOUSTICAL LOUVER, 8" DEP, PER SPECIFICATIONS AND PERFORMANCE.
4. MINIMUM INSERSION LOSS: 63-2, 125-3, 250-5, 500-9, 1000-14, 2000-15, 4000-10, 8000-9

PART OF OPTION ITEM #2

PART OF OPTION ITEM #2

MINI SPLIT FAN COIL UNIT (MS) SCHEDULE

PLAN DESIGNATION	SERVICE	UNIT ARRANGEMENT	AIRFLOW (CFM)	COOLING			NOTES
				TOTAL CAPACITY (MBH)	EAT DB (°F)	EAT WB (°F)	
MS-102	AV CLOSET 126D	WALL MOUNTED	381	9.0	75.0	62.0	(1) (2)
MS-101	ELEVATOR MECHANICAL ROOM 117	WALL MOUNTED	450	18.0	75.0	62.0	(1) (2)

NOTES:
1. SEE ACCU SCHEDULE FOR CONDENSING UNIT PERFORMANCE
2. PROVIDE UNIT MOUNTED DISCONNECT SWITCH
3. INDOOR UNIT POWERED BY OUTDOOR CONDENCING UNIT, SEE ACCU SCHEDULE

PUMP SCHEDULE (ABOVEGROUND STORAGE TANKS FUEL SYSTEM)

PLAN DESIGNATION	SERVICE	TYPE	FLUID	GPM	INLET SIZE	OUTLET SIZE	HEAD (FT)	MOTOR DATA			LOCATION	NOTES
								HP	V/PH/HZ	RPM		
FOS-1	TRANSFER PUMP	GEAR PUMP	FUEL OIL NO. 2	4	1/2"	1/2"	30	0.1	115/1/60	1140	FUEL SKID	(1-4)
FOS-2	TRANSFER PUMP	GEAR PUMP	FUEL OIL NO. 2	4	1/2"	1/2"	30	0.1	115/1/60	1140	FUEL SKID	(1-4)
FOR-1	RETURN PUMP	GEAR PUMP	FUEL OIL NO. 2	10	3/4"	3/4"	31	2/3	115/1/60	1140	DAY TANK	(1-4)

NOTES:

1. PUMP SHALL MEET ALL MATERIAL CONSTRUCTION AND PERFORMANCE REQUIREMENTS OF UFGS 33 52 10.
2. CONTRACTOR TO CONFIRM THE FINAL PUMP SIZING BASED ON ACTUAL PIPING AND COMPONENT CONFIGURATION USED. ENSURE ALL OPERATIONAL PERFORMACE REQUIREMENTS ARE MET.
3. ASSUMED PUMP MOTOR SIZES ARE SHOWN; VERIFY WITH FINAL PUMP SIZING.
4. PUMPS LOCATED OUTSIDE MUST HAVE NEMA 4X ENCLOSURE.

GENERATOR EXHAUST SILENCER (DS) SCHEDULE

PLAN DESIGNATION	SERVICE	OCTAVE BAND (Hz)								WIDTH	HEIGHT	LENGTH	NOTES
		63	125	250	500	1000	2000	4000	8000				
DS-9	GENERATOR EXHAUST	2	3	5	6	10	10	6	5	144	84	24	(1)

NOTES:

1. CONTRACTOR TO CONFIRM THE FINAL SILENCER SIZING BASED ON INSERSION LOSSES INDICATED . ENSURE ALL OPERATIONAL PERFORMACE REQUIREMENTS ARE MET.

DUCT SILENCER (DS) SCHEDULE

PLAN DESIGNATION	EQUIPMENT SERVED	SYSTEM	AIR FLOW (CFM)	VELOCITY (FPM)	MAXIMUM PRESSURE DROP (in. w.g.)	DIMENSIONS		SILENCER TYPE/INFILL	MINIMUM INSERTION LOSS/MAXIMUM GENERATED NOISE (dB, per Hz)								NOTES
						W x H (in.)	L (in)		63	125	250	500	1000	2000	4000	8000	
DS-1	AHU-1	SUPPLY	17000	1821	0.25	48 x 28	36	RECTANGULAR, BAGGED FIBER GLASS	0 / 66	4 / 61	5 / 55	7 / 59	7 / 53	5 / 55	0 / 56	0 / 47	(1)
DS-2	AHU-1	RETURN	17000	2833	0.25	48 x 18	36	RECTANGULAR, BAGGED FIBER GLASS	0 / 63	0 / 63	0 / 61	11 / 55	11 / 55	0 / 48	0 / 33	0 / 22	(1)
DS-3	AHU-2	SUPPLY	19000	1244	0.25	50 x 44	36	RECTANGULAR, BAGGED FIBER GLASS	0 / 68	4 / 59	5 / 56	8 / 57	3 / 56	2 / 56	1 / 55	0 / 45	(1)
DS-4	AHU-2	RETURN	19000	2036	0.25	42 x 32	36	RECTANGULAR, BAGGED FIBER GLASS	0 / 62	2 / 60	4 / 59	8 / 56	5 / 57	4 / 46	0 / 45	0 / 39	(1)
DS-5	VAV-115	SUPPLY	400	900	0.25	8 x 8	36	RECTANGULAR, BAGGED FIBER GLASS	0 / 47	6 / 47	6 / 42	0 / 36	0 / 33	0 / 32	0 / 31	0 / 30	(1)
DS-6	VAV-121	SUPPLY	525	1181	0.25	8 x 8	36	RECTANGULAR, BAGGED FIBER GLASS	0 / 47	6 / 47	6 / 42	0 / 36	0 / 33	0 / 32	0 / 31	0 / 30	(1)
DS-7	VAV-213	SUPPLY	300	675	0.25	8 x 8	36	RECTANGULAR, BAGGED FIBER GLASS	0 / 47	6 / 47	6 / 42	0 / 36	0 / 33	0 / 32	0 / 31	0 / 30	(1)
DS-8	VAV-215	SUPPLY	400	900	0.25	8 x 8	36	RECTANGULAR, BAGGED FIBER GLASS	0 / 47	6 / 47	6 / 42	0 / 36	0 / 33	0 / 32	0 / 31	0 / 30	(1)

NOTES:

(1) CONTRACTOR TO CONFIRM THE FINAL SILENCER SIZING BASED ON INSERTION LOSSES INDICATED TO ENSURE ALL OPERATIONAL PERFORMANCE REQUIREMENTS ARE MET.

AIR COOLED CONDENSING UNIT (ACCU) SCHEDULE

PLAN DESIGNATION	TYPE	SERVICE	TOTAL CAPACITY (MBH)	AMBIENT TEMPERATURE (°F)	REFRIGERANT	MAXIMUM REFRIGERANT CHARGE (LBS)	EER (AHRI)	SEER (AHRI)	ELECTRICAL					NOTES
									MCA	MOCP	VOLTAGE	HZ	PHASE	
ACCU-1	MINI SPLIT HEAT PUMP	ELEVATOR MECHANICAL ROOM	18.0	41.5	R454B	4.0	10.7	20.2	11	28	208	60	1	(1) (2)
ACCU-2	SPLIT SYSTEM COOLING	AV CLOSET 126D	9.0	87.2	R454B	3.6	15.4	28.4	10	15	208	60	1	(1) (2)

NOTES:
1. SET ON 2 INCH CONCRETE BASE AS LOCATED ON PLANS
2. ACCU CAPACITY SHALL MATCH CAPACITY OF ASSOCIATED COOLING COIL

SYM	DESCRIPTION	DATE	APPR

NAVFAC

LICENSED PROFESSIONAL ENGINEER JITENDRA VALMIK 062-072817 STATE OF ILLINOIS
EXP: 11/30/2027
SIGNED: 03/11/2026

ASMD LLC.

APPROVED
FOR COMMANDER NAVFAC
ACTIVITY
NATHANIEL PYRON, MILCON PLANNER, DPPH
SATISFACTORY TO DATE 3/10/2026
DES JV DRW AS CHK AP
PM/DM DKS/DMK
BRANCH MANAGER KYM
CHIEF ENG/ARCH KYM
FIRE PROTECTION RYO

DEPARTMENT OF THE NAVY
NAVAL FACILITIES ENGINEERING SYSTEMS COMMAND ~ PACIFIC
NAVFAC PACIFIC
NAVAL FACILITIES ENGINEERING SYSTEMS COMMAND
MAKALAPA, HAWAII
U.S. NAVSUPPACT
MCB CAMP BLAZ, GUAM
JFY 2022 PROJECT J-875
BATTLE STAFF TRAINING FACILITY
MECHANICAL SCHEDULES - SHEET 5

SCALE: NTS
EPROJECT NO.: 1696746
CONSTR. CONTR. NO.
NAVFAC DRAWING NO. 17322133
SHEET 293 OF 468
MH704
DRAWFORM REVISION: 25 AUGUST 2020

3/11/2026 4:37:52 PM MH704
C:\REVIT_2024_PROJECT_FILES\BLDG-J-875-1696746-M_7542_Jon_Koenig.rvt

CRAC UNIT POINTS LIST

PLAN DESIGNATION	POINT DESCRIPTION	POINT TYPE						NOTES
		AO	DO	AI	DI	VP	ALARMS	
CRAC-X-XXX S/S	CRAC FAN START STOP		X					
CRAC-X-XXX SF STATUS	CRAC SUPPLY FAN STATUS				X		X	ALARM MISMATCH WITH FCU-X-XXX S/S
CRAC-X-XXX ECM	CRAC SUPPLY FAN ECM	X		X		X	X	COMMUNICATION VIA PROTOCOL AS SPECIFIED
CRAC-X-XXX WWC ACV	CRAC WATER COOLING COIL AUTOMATIC CONTROL VALVE	X		X				
CRAC-X-XXX DAT	CRAC DISCHARGE AIR TEMPERATURE			X				APPLICABLE TO BLOWER COILS ONLY
CRAC-X-XXX ST	CRAC SPACE TEMPERATURE			X			X	ALARM IF TEMPERATURE VARIES 5° ABOVE OR BELOW SETPOINT FOR 5 MINUTES
CRAC-X-XXX ST SP	CRAC SPACE TEMPERATURE SETPOINT			X		X		SETPOINT ADJUSTABLE FROM THERMOSTAT
CRAC-X-XXX CND OF	CRAC CONDENSATE OVERFLOW				X		X	OVERFLOW ALARM

NOTES:

1. DESIGNATION "X-XXX" REFER TO INDIVIDUAL FAN COIL UNIT DESIGNATIONS AS SCHEDULED.

C1 CRAC UNIT SCHEMATIC & POINT LIST

NOT TO SCALE

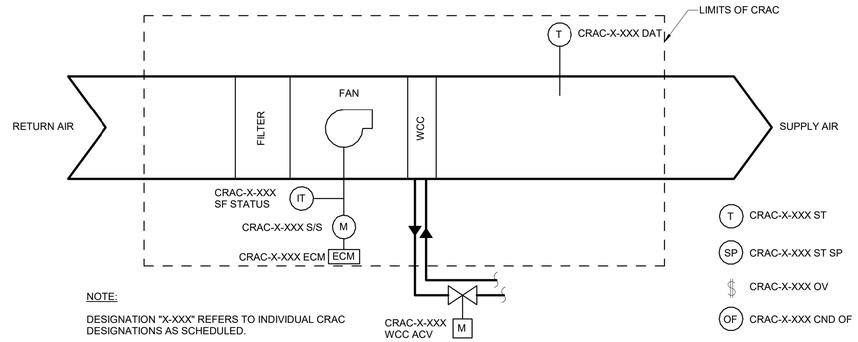

NOTE:

DESIGNATION "X-XXX" REFERS TO INDIVIDUAL CRAC DESIGNATIONS AS SCHEDULED.

CRAC UNIT SCHEMATIC (CRAC-X-XXX)

(CHILLED WATER COOLING ONLY)

SEQUENCE OF OPERATION:

GENERAL REQUIREMENTS

1. HVAC SYSTEM SHALL BE CONTROLLED BY UNIT MOUNTED, STAND ALONE DIRECT DIGITAL CONTROLLERS, UNLESS NOTED OTHERWISE. CONTROLLERS SHALL BE INTEGRATED INTO BUILDING DIRECT DIGITAL CONTROL (DDC) SYSTEM FOR REMOTE CONTROL AND MONITORING. DDC SYSTEM COMMUNICATION SHALL BE AS SPECIFIED.
2. SET POINTS LABELED AS ADJUSTABLE SHALL BE FULLY ADJUSTABLE FROM OPERATOR WORKSTATIONS. SETPOINTS FOR THERMOSTATS WITH INTEGRAL SET POINT ADJUSTMENTS SHALL BE ADJUSTABLE FROM BOTH THE THERMOSTAT AND THE OPERATOR WORKSTATION. SETPOINT ADJUSTMENT SHALL NOT REQUIRE PROGRAMMING OF DDC PANELS. ALL SETPOINTS, TIMERS, DEADBANDS, ETC., LISTED IN SEQUENCES SHALL BE ADJUSTABLE IN SEQUENCE OR NOT, SOFTWARE POINTS SHALL BE USED FOR THESE POINTS.
3. ALARM REPORTING SHALL BE DONE AT PANEL ASSOCIATED WITH EQUIPMENT AND SHALL BE AVAILABLE FROM OPERATOR WORKSTATIONS.

NORMAL CONTROL POSITIONS

1. NORMAL POSITIONS OF CONTROLLED DEVICES SHALL BE POSITION DEVICE. RETURNS TO ON POWER FAILURE OR CONTROLLER FAILURE. NORMAL POSITIONS SHALL BE AS FOLLOWS:
   A. AUTOMATIC CONTROL VALVE (ACV) ON COOLING COILS: OPEN TO COIL UNLESS NOTED OTHERWISE.

CRAC UNIT (CRAC-X-XXX) CONTROL SEQUENCE

1. CRAC-X-XXX SHALL BE CONTROLLED BY UNIT MOUNTED STAND ALONE DDC CONTROLLER.
2. CRAC-X-XXX SERVING TELECOMMUNICATION ROOMS SHALL BE ENABLED 24 HRS, 7 DAYS A WEEK.
   A. WHEN SPACE TEMPERATURE IS ABOVE COOLING SETPOINT (75 F, ADJUSTABLE), FAN SHALL START AND WATER COOLING COIL (WCC) ACV SHALL MODULATE TO MAINTAIN SPACE TEMPERATURE. WHEN SPACE IS BELOW SETPOINT WCC ACV SHALL CLOSE AND FAN SHALL STOP
3. WHEN SYSTEM IS IN THE "UNOCCUPIED" MODE OF OPERATION AND OVERRIDE SWITCH IS ACTIVATED, CRAC SHALL OPERATE AS INDICATED FOR OCCUPIED MODE FOR A PERIOD OF 60 MINUTES (ADJUSTABLE). CRAC SHALL SWITCH TO "UNOCCUPIED" MODE AFTER TIME PERIOD HAS ELAPSED AND OPERATE AS INDICATED FOR UNOCCUPIED MODE OF OPERATION.
4. WHERE MULTIPLE CRAC SERVE A SINGLE SPACE, PROVIDE LEAD/LAG CONTROL. CHANGE LEAD UNIT DESIGNATION ON A WEEKLY (ADJUSTABLE) BASIS.

SAFETY SHUTDOWN

1. SAFETY SHUTDOWN CIRCUIT SHALL BE PROVIDED EXTERNAL TO SYSTEM CONTROLLER. CIRCUIT SHALL BE DIRECTLY CONNECTED TO STARTERS OF MOTOR-POWERED EQUIPMENT AND SHALL FUNCTION REGARDLESS OF STATUS OF SYSTEM CONTROLLER. IN EVENT OF SYSTEM SHUTDOWN, DEVICES SHALL RETURN TO NORMAL POSITION. CIRCUITS SHALL BE RESET MANUALLY. FOLLOWING SHALL COMPRISE SAFETY SHUT-DOWN CIRCUIT:
   A. CONDENSATE OVERFLOW SWITCH

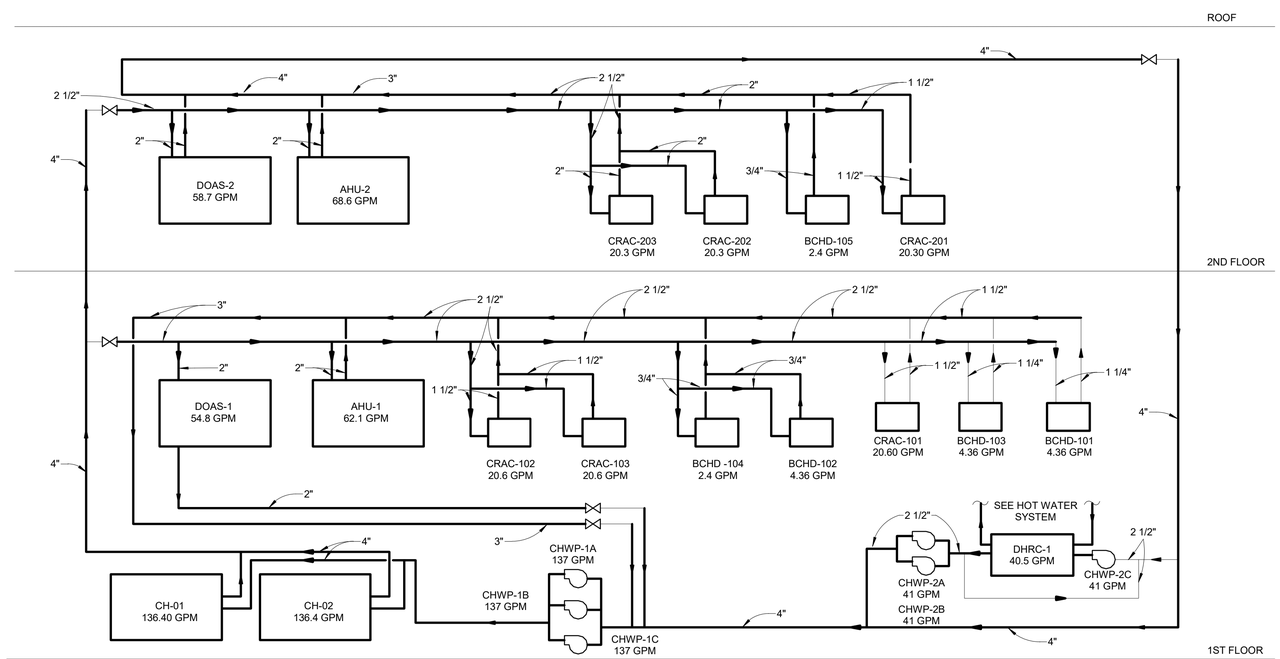

A1 HVAC - CHILLED WATER RISER DIAGRAM

NOT TO SCALE

SYM	DESCRIPTION	DATE	APPR

NAVFAC

LICENSED PROFESSIONAL ENGINEER JITENDRA VALMIK 062-072817 STATE OF ILLINOIS

EXP: 11/30/2027
SIGNED: 03/11/2026 BY: A.S.

ASMD LLC.

AE INFO

APPROVED

FOR COMMANDER NAVFAC

ACTIVITY
NATHANIEL PYRON, MILCON PLANNER, DPPH

SATISFACTORY TO DATE 3/10/2026

DES	JV	DRW	AS	CHK	AP
PM/DM	DKS/DMK				
BRANCH MANAGER	KYM				
CHIEF ENG/ARCH	KYM				
FIRE PROTECTION	RYO				

DEPARTMENT OF THE NAVY
NAVAL FACILITIES ENGINEERING SYSTEMS COMMAND
NAVFAC PACIFIC
U.S. NAVSUPPACT

NAVAL FACILITIES ENGINEERING SYSTEMS COMMAND
NAVAL FACILITIES ENGINEERING SYSTEMS COMMAND ~ PACIFIC
MAKALAPA, HAWAII

M/CB CAMP BLAZ, GUAM

JFY 2022 PROJECT J-875
BATTLE STAFF TRAINING FACILITY

MECHANICAL CONTROLS

SCALE: NTS

EPROJECT NO.: 1696746

CONSTR. CONTR. NO.

NAVFAC DRAWING NO.
17322134

SHEET 294 OF 468

MH800

DRAWFORM REVISION: 25 AUGUST 2020

3/11/2026 4:37:55 PM MH800
C:\REVIT_2024_PROJECT_FILES\BLDG-J-875-1696746-M_7542_Jon_Koenig.rvt

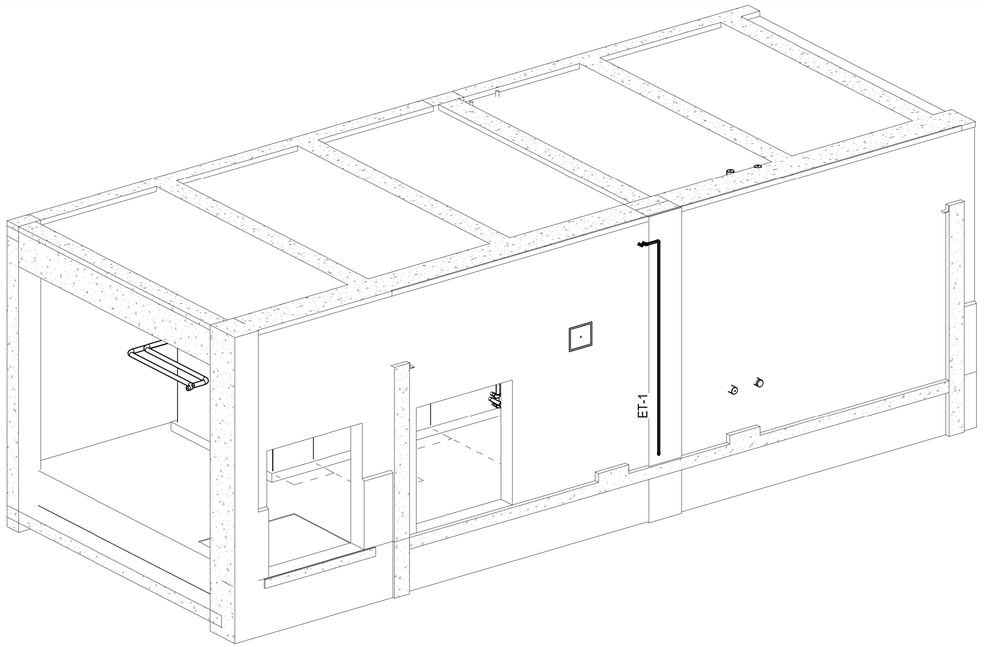

C1 FIRST FLOOR MECHANICAL ROOM ENLARGED ISOMETRIC

NOT TO SCALE

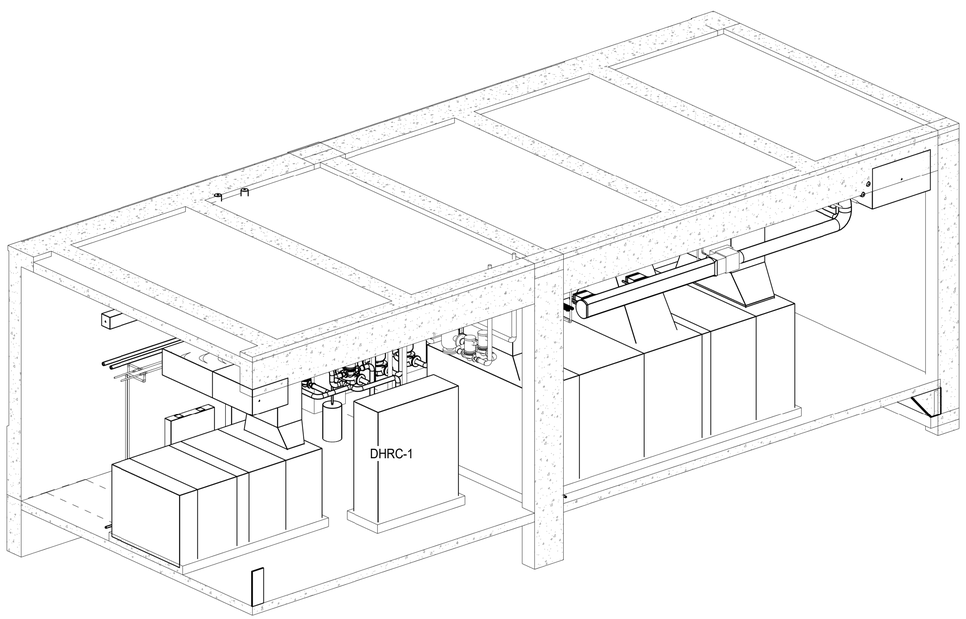

A1 FIRST FLOOR MECHANICAL ROOM ENLARGED ISOMETRIC 2

NOT TO SCALE

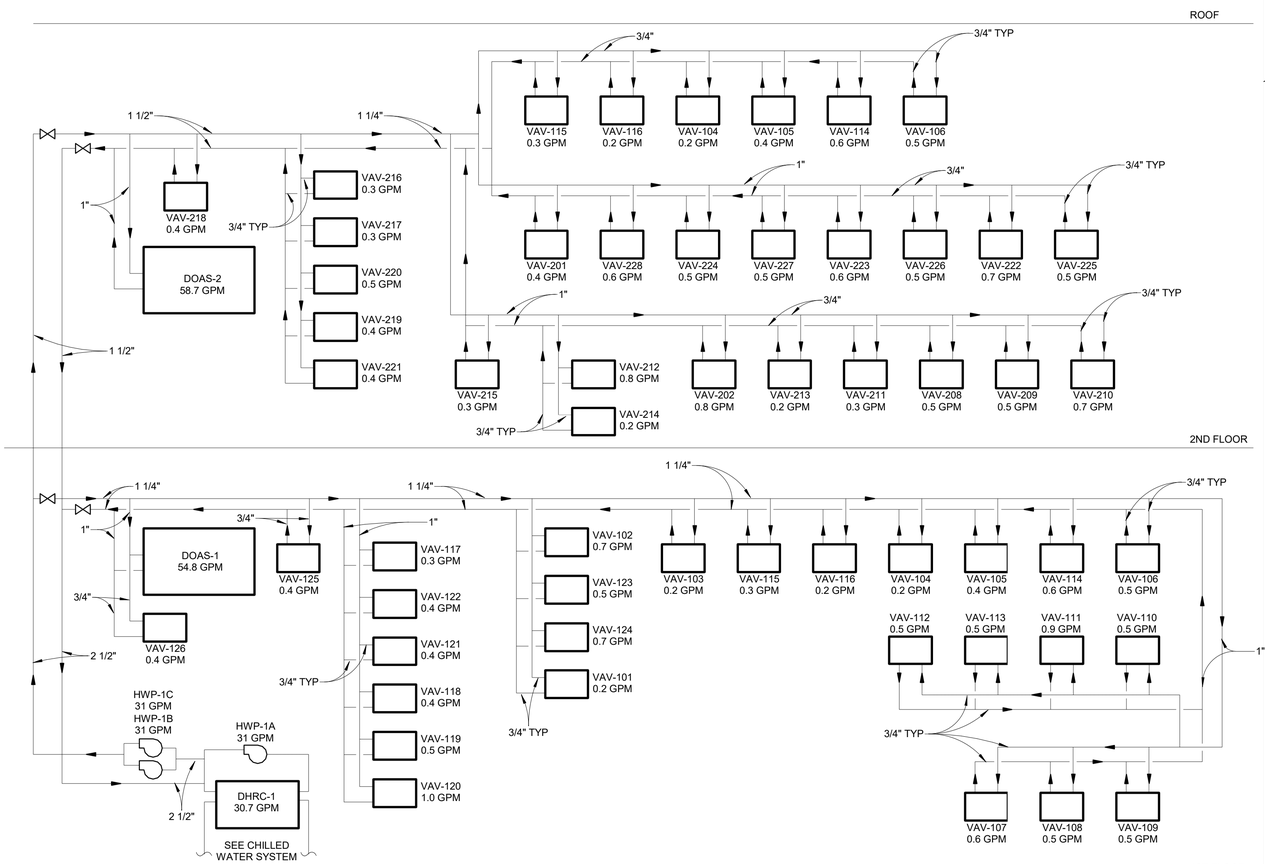

A3 HVAC - HOT WATER RISER DIAGRAM

NOT TO SCALE

SYM	DESCRIPTION	DATE	APPR

NAVFAC

LICENSED PROFESSIONAL ENGINEER
JITENDRA VALMIK
062-072817
OF ILLINOIS
EXP: 11/30/2027
SIGNED: 03/11/2026

ASMD LLC.

APPROVED

FOR COMMANDER NAVFAC

ACTIVITY
NATHANIEL PYRON, MILCON PLANNER, DPPH

SATISFACTORY TO DATE 3/10/2026

DES JV | DRW AS | CHK AP

PM/DM DKS/DMK

BRANCH MANAGER KYM

CHIEF ENG/ARCH KYM

FIRE PROTECTION RYO

DEPARTMENT OF THE NAVY
NAVAL FACILITIES ENGINEERING SYSTEMS COMMAND
NAVFAC PACIFIC
U.S. NAVSUPPACT

NAVAL FACILITIES ENGINEERING SYSTEMS COMMAND ~ PACIFIC
MAKALAPA, HAWAII

MCB CAMP BLAZ, GUAM

JFY 2022 PROJECT J-875
BATTLE STAFF TRAINING FACILITY

HVAC ISOMETRICS - SHEET 1

SCALE: NTS

EPROJECT NO.: 1696746

CONSTR. CONTR. NO.

NAVFAC DRAWING NO. 17322135

SHEET 295 OF 468

MH900

DRAWFORM REVISION: 25 AUGUST 2020

3/11/2026 4:37:58 PM MH900
C:\REVIT_2024_PROJECT_FILES\BLDG-J875-1696746-M_7542_Jon_Koenig.rvt

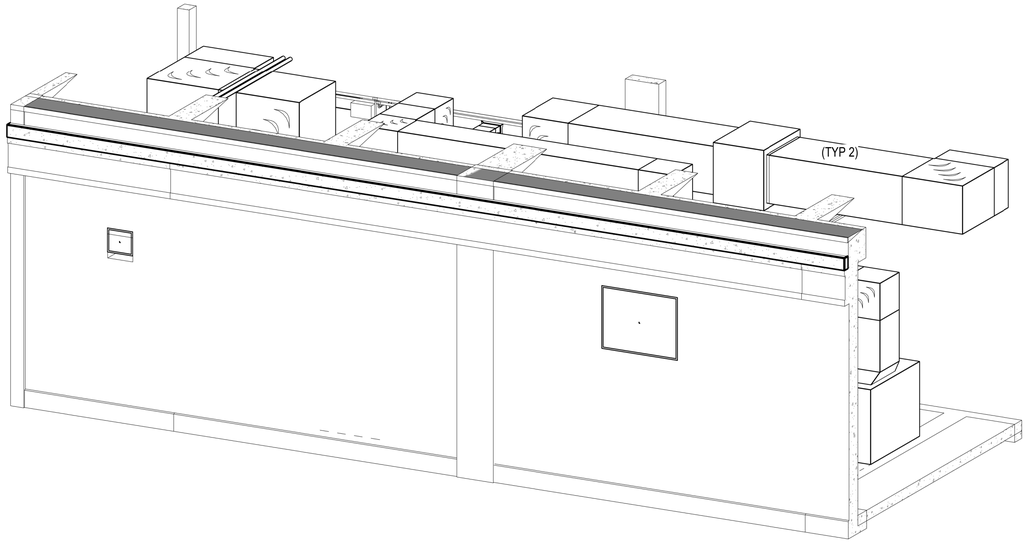

C1 SECOND FLOOR MECHANICAL ROOM ISOMETRIC

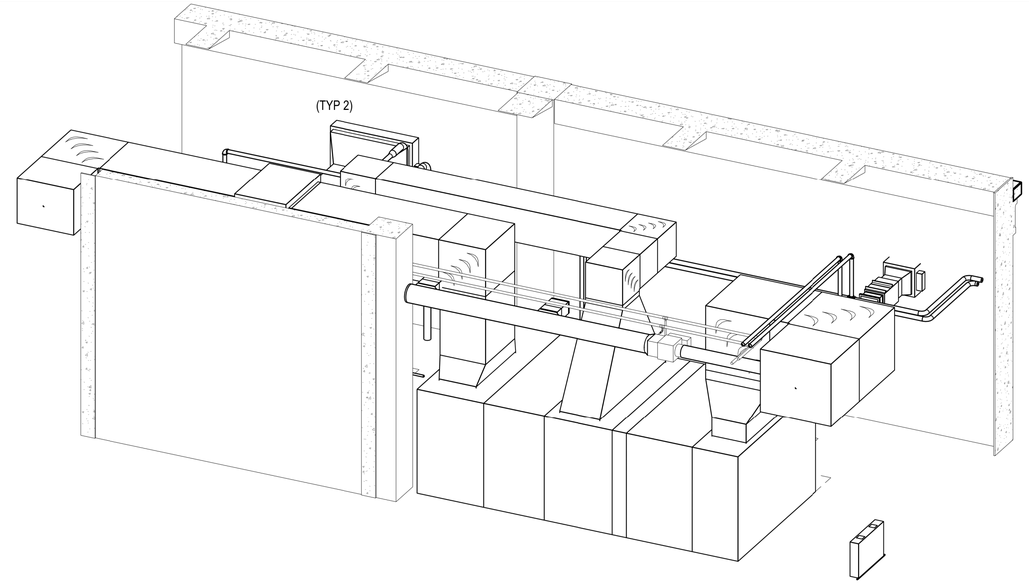

C3 SECOND FLOOR MECHANICAL ROOM ISOMETRIC 2

SYM	DESCRIPTION	DATE	APPR

NAVFAC

LICENSED PROFESSIONAL ENGINEER
JITENDRA VALMIK
062-072817
OF ILLINOIS
EXP: 11/30/2027
SIGNED: 03/11/2026 EST

ASMD LLC.
A/E INFO

APPROVED

FOR COMMANDER NAVFAC

ACTIVITY
NATHANIEL PYRON, MILCON PLANNER, DPPH

SATISFACTORY TO DATE 3/10/2026

DES JV | DRW AS | CHK AP

PM/DM DKS/DMK
BRANCH MANAGER KYM
CHIEF ENG/ARCH KYM
FIRE PROTECTION RYO

DEPARTMENT OF THE NAVY
NAVAL FACILITIES ENGINEERING SYSTEMS COMMAND
NAVFAC PACIFIC
NAVAL FACILITIES ENGINEERING SYSTEMS COMMAND ~ PACIFIC
MAKALAPA, HAWAII
U.S. NAVSUPPACT
MCB CAMP BLAZ, GUAM
JFY 2022 PROJECT J-875
BATTLE STAFF TRAINING FACILITY
HVAC ISOMETRICS - SHEET 2

SCALE: NTS
EPROJECT NO.: 1696746
CONSTR. CONTR. NO.
NAVFAC DRAWING NO. 17322136
SHEET 296 OF 468

MH901

DRAWFORM REVISION: 25 AUGUST 2020

3/11/2026 4:38:02 PM MH901
C:\REVIT_2024_PROJECT_FILES\BLDG-J-875-1696746-M_7542_Jon_Koenig.rvt

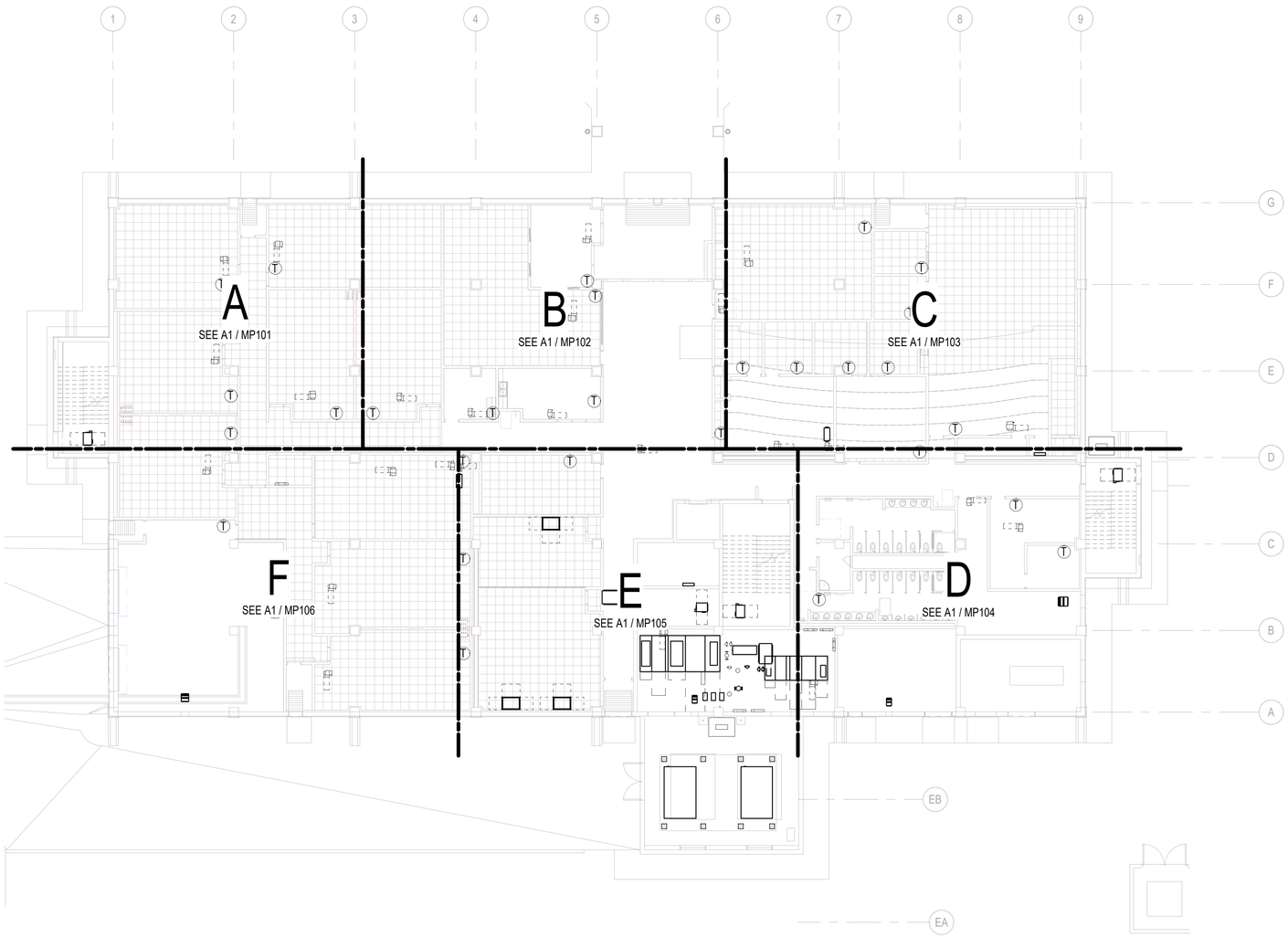

B1 COMPOSITE HVAC PIPING PLAN - FIRST FLOOR

1/16" = 1'-0"

GENERAL NOTES

KEY PLAN

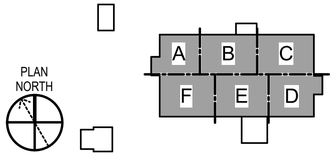

GRAPHIC SCALE(S)

1/16" = 1' - 0" 0 5' 10' 20' 30' 60'

SYM	DESCRIPTION	DATE	APPR

NAVFAC

LICENSED PROFESSIONAL ENGINEER
JITENDRA VALMIK
062-072817
OF ILLINOIS
EXP: 11/30/2027
SIGNED: 03/11/2026 M.A.

ASMD LLC.
A/E INFO

APPROVED
FOR COMMANDER NAVFAC

ACTIVITY
NATHANIEL PYRON, MILCON PLANNER, DPPH

SATISFACTORY TO DATE 3/10/2026

DES JV | DRW CG | CHK AP
PM/DM DKS/DMK
BRANCH MANAGER KYM
CHIEF ENG/ARCH KYM
FIRE PROTECTION RYO

DEPARTMENT OF THE NAVY
NAVAL FACILITIES ENGINEERING SYSTEMS COMMAND ~ PACIFIC
NAVFAC PACIFIC
U.S. NAVSUPPACT

NAVAL FACILITIES ENGINEERING SYSTEMS COMMAND
MAKALAPA, HAWAII
MCB CAMP BLAZ, GUAM

JFY 2022 PROJECT J-875
BATTLE STAFF TRAINING FACILITY

COMPOSITE HVAC PIPING PLAN - FIRST FLOOR

SCALE: AS NOTED
EPROJECT NO.: 1696746
CONSTR. CONTR. NO.
NAVFAC DRAWING NO. 17322137
SHEET 297 OF 468

MP100

DRAWFORM REVISION: 25 AUGUST 2020

3/11/2026 4:38:06 PM MP100
C:\REVIT_2024_PROJECT_FILES\BLDG-J-875-1696746-M_7542_Jon_Koenig.rvt

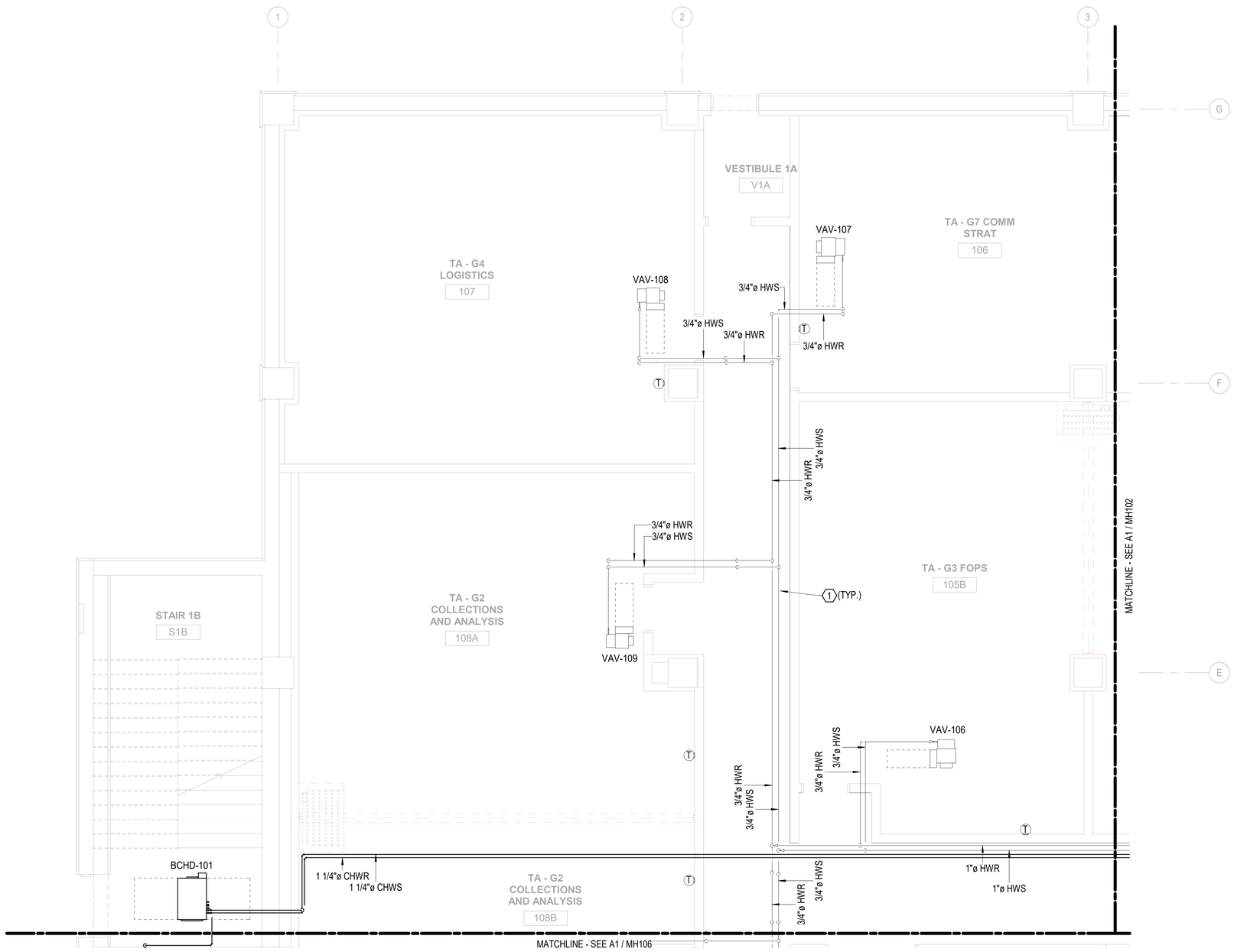

A1 HVAC PIPING PLAN - FIRST FLOOR - AREA 'A'

1/4" = 1'-0"

GENERAL NOTES

1. SEE M-001 FOR GENERAL MECHANICAL NOTES THAT SHALL APPLY TO ALL SHEETS UNLESS NOTED OTHERWISE.
2. CONTRACTOR SHALL REFER TO MECHANICAL DETAILS AND SPECIFICATIONS FOR ADDITIONAL INSTALLATION REQUIREMENTS.
3. ALL CONDENSATE PIPING SHALL BE INSTALLED AT 1/8" PER FT. SLOPE.
4. MOUNT ALL T-STATS NO HIGHER THAN 48" AFF.

KEY NOTES

1. PROVIDE NEW HOT WATER/ CHILLED WATER SUPPLY & RETURN PIPING AS INDICATED. INSULATE PIPING PER SPECIFICATIONS. INSTALL PER DETAIL. COORDINATE EXACT ROUTING IN FIELD WITH OTHER TRADES.

KEY PLAN

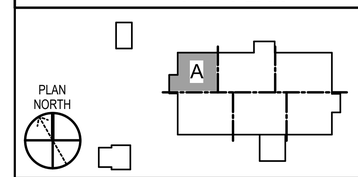

GRAPHIC SCALE(S)

1/4" = 1' - 0" 0 1' 5' 10' 15'

SYM	DESCRIPTION	DATE	APPR

NAVFAC

LICENSED PROFESSIONAL ENGINEER JITENDRA VALMIK 062-072817 OF ILLINOIS
EXP: 11/30/2027
SIGNED: 03/11/2026

ASMD LLC.

APPROVED
FOR COMMANDER NAVFAC
ACTIVITY: NATHANIEL PYRON, MILCON PLANNER, DPPH
SATISFACTORY TO DATE: 3/10/2026
DES: JV DRW: CG CHK: AP
PM/DM: DKS/DMK
BRANCH MANAGER: KYM
CHIEF ENG/ARCH: KYM
FIRE PROTECTION: RYO

DEPARTMENT OF THE NAVY
NAVFAC PACIFIC
NAVAL FACILITIES ENGINEERING SYSTEMS COMMAND
NAVAL FACILITIES ENGINEERING SYSTEMS COMMAND – PACIFIC
MAKALAPA, HAWAII
U.S. NAVSUPPACT
MCB CAMP BLAZ, GUAM
JFY 2022 PROJECT J-875
BATTLE STAFF TRAINING FACILITY
HVAC PIPING PLAN - FIRST FLOOR - AREA 'A'

SCALE: AS NOTED
EPROJECT NO.: 1696746
CONSTR. CONTR. NO.
NAVFAC DRAWING NO. 17322138
SHEET 298 OF 468
MP101

DRAWFORM REVISION: 25 AUGUST 2020

3/11/2026 4:38:10 PM MP101
C:\REVIT_2024_PROJECT_FILES\BLDG-J875-1696746-M_7542_Jon_Koenig.rvt

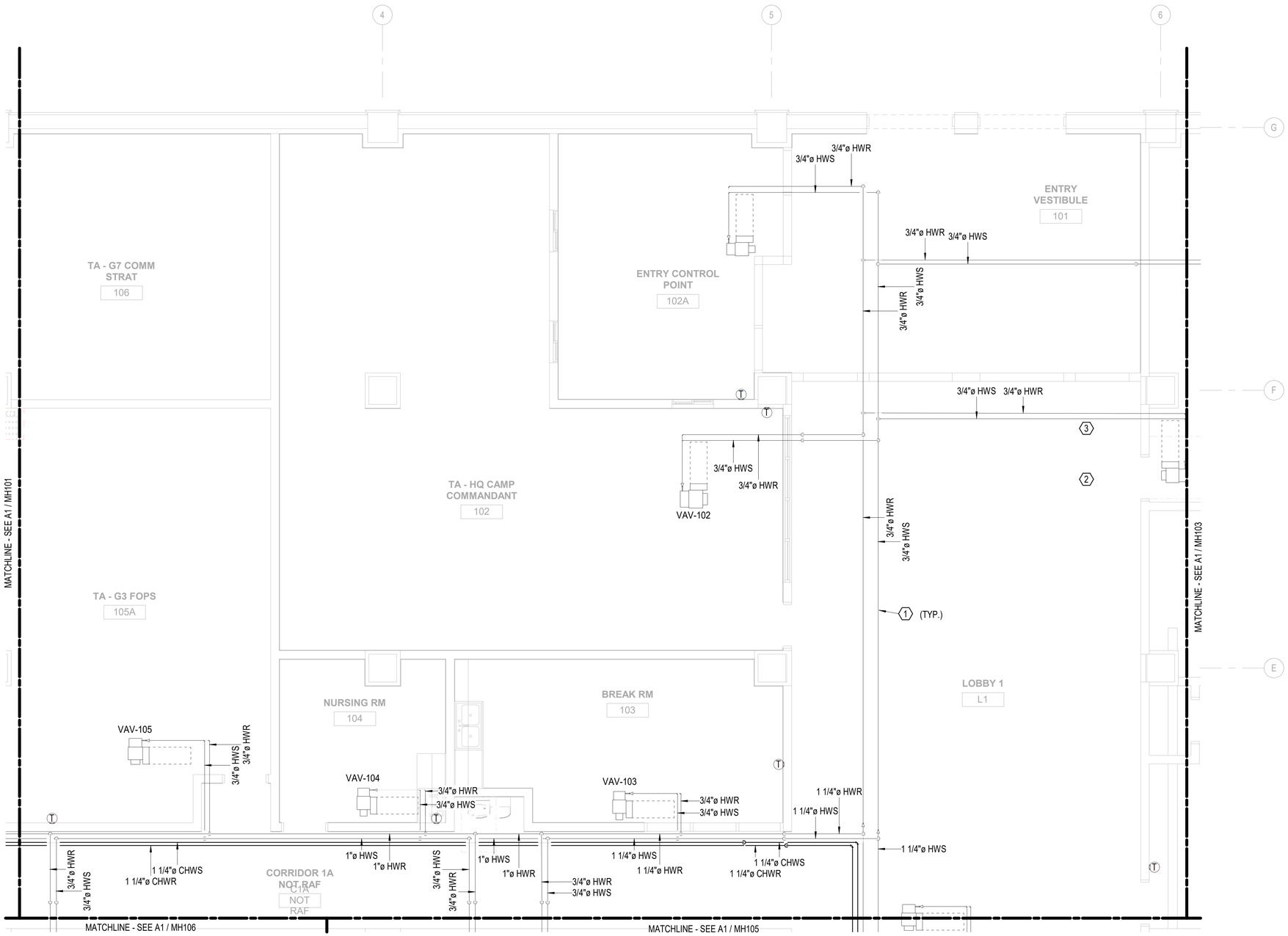

A1 HVAC PIPING PLAN - FIRST FLOOR - AREA 'B'

1/4" = 1'-0"

GENERAL NOTES

1. SEE M-001 FOR GENERAL MECHANICAL NOTES THAT SHALL APPLY TO ALL SHEETS UNLESS NOTED OTHERWISE.
2. CONTRACTOR SHALL REFER TO MECHANICAL DETAILS AND SPECIFICATIONS FOR ADDITIONAL INSTALLATION REQUIREMENTS.
3. ALL CONDENSATE PIPING SHALL BE INSTALLED AT 1/8" PER FT. SLOPE.
4. MOUNT ALL T-STATS NO HIGHER THAN 48" AFF.

(X) KEY NOTES

1. PROVIDE NEW HOT WATER/ CHILLED WATER SUPPLY & RETURN PIPING AS INDICATED. INSULATE PIPING PER SPECIFICATIONS. INSTALL PER DETAIL. COORDINATE EXACT ROUTING IN FIELD WITH OTHER TRADES.
2. PROVIDE NEW CONDENSATE DRAIN AS INDICATED. MAINTAIN MIN. 1/8" PER FOOT PITCH IN THE DIRECTION OF FLOW. INSULATE PIPING PER SPECIFICATIONS. TERMINATE PIPING AT FLOOR/ OPEN HUB DRAIN WITH 1" AIR GAP.
3. PROVIDE NEW REFRIGERANT PIPING AS INDICATED. VERIFY EXACT PIPE SIZES IN FIELD BASED ON ACTUAL ROUTING. INSULATE PIPING PER SPECIFICATIONS. INSTALL PER DETAIL. COORDINATE EXACT ROUTING IN FIELD WITH OTHER TRADES.

KEY PLAN

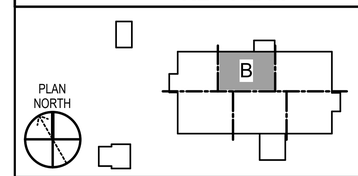

GRAPHIC SCALE(S)

1/4" = 1' - 0" 0 1' 5' 10' 15'

SYM	DESCRIPTION	DATE	APPR

NAVFAC

LICENSED PROFESSIONAL ENGINEER
JITENDRA VALMIK
062-072817
STATE OF ILLINOIS
EXP: 11/30/2027
SIGNED: 03/11/2026

ASMD LLC.
A/E INFO

APPROVED
FOR COMMANDER NAVFAC

ACTIVITY
NATHANIEL PYRON, MILCON PLANNER, DPPH

SATISFACTORY TO DATE 3/10/2026
DES JV DRW CG CHK AP
PM/DM DKS/DMK
BRANCH MANAGER KYM
CHIEF ENG/ARCH KYM
FIRE PROTECTION RYO

DEPARTMENT OF THE NAVY
NAVFAC PACIFIC
NAVAL FACILITIES ENGINEERING SYSTEMS COMMAND
U.S. NAVSUPPACT
NAVAL FACILITIES ENGINEERING SYSTEMS COMMAND ~ PACIFIC
MAKALAPA, HAWAII
MCB CAMP BLAZ, GUAM
JFY 2022 PROJECT J-875
BATTLE STAFF TRAINING FACILITY
HVAC PIPING PLAN - FIRST FLOOR - AREA 'B'

SCALE: AS NOTED
EPROJECT NO.: 1696746
CONSTR. CONTR. NO.
NAVFAC DRAWING NO. 17322139
SHEET 299 OF 468
MP102

DRAWFORM REVISION: 25 AUGUST 2020

3/11/2026 4:38:14 PM MP102
C:\REVIT_2024_PROJECT_FILES\BLDG-J-875-1696746-M_7542_Jon_Koenig.rvt

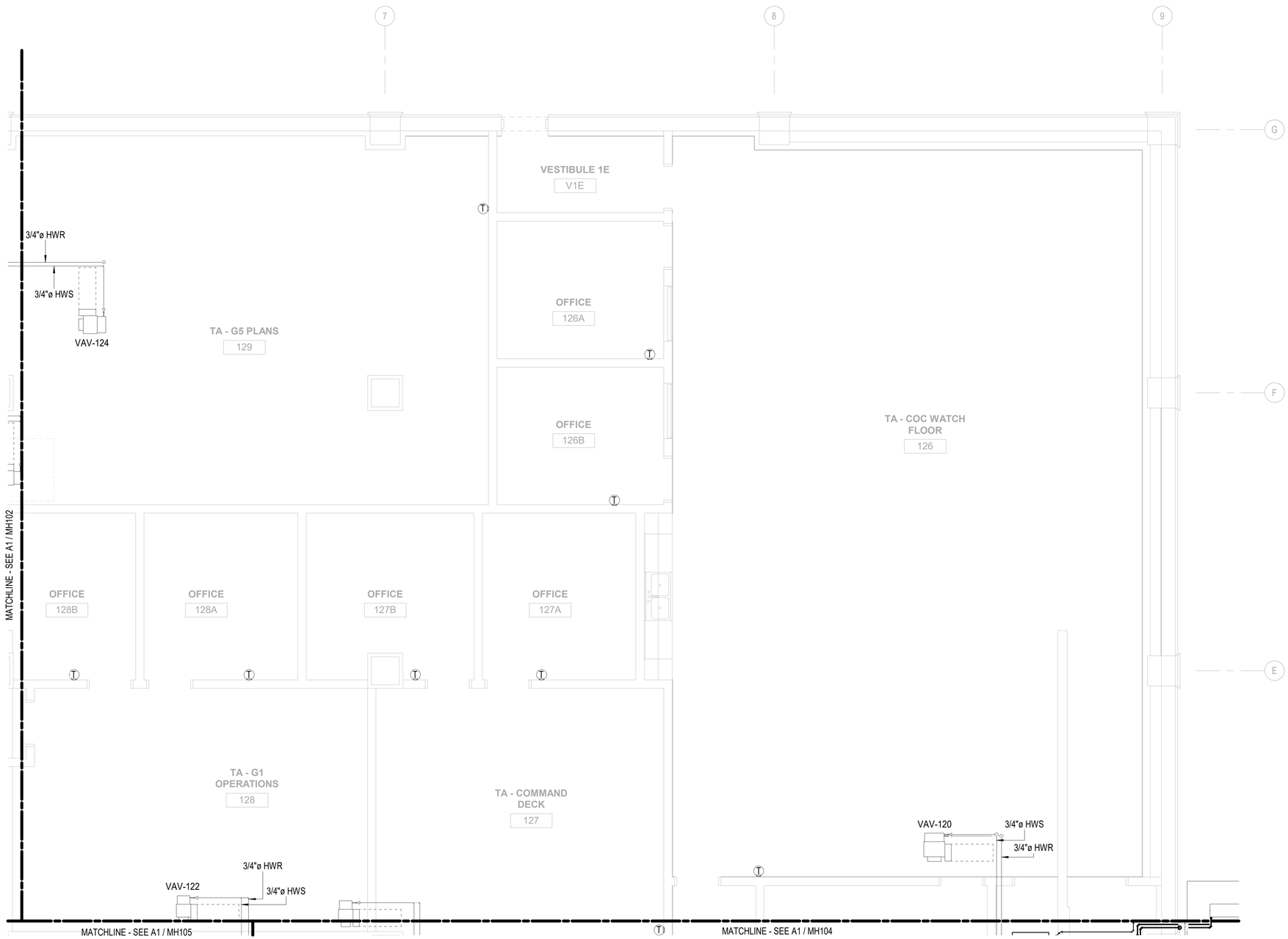

A1 HVAC PIPING PLAN - FIRST FLOOR - AREA 'C'

1/4" = 1'-0"

GENERAL NOTES

1. SEE M-001 FOR GENERAL MECHANICAL NOTES THAT SHALL APPLY TO ALL SHEETS UNLESS NOTED OTHERWISE.
2. CONTRACTOR SHALL REFER TO MECHANICAL DETAILS AND SPECIFICATIONS FOR ADDITIONAL INSTALLATION REQUIREMENTS.
3. ALL CONDENSATE PIPING SHALL BE INSTALLED AT 1/8" PER FT. SLOPE.
4. MOUNT ALL T-STATS NO HIGHER THAN 48" AFF.

KEY NOTES

KEY PLAN

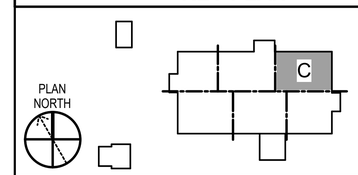

GRAPHIC SCALE(S)

1/4" = 1' - 0" 0 1' 5' 10' 15'

SYM	DESCRIPTION	DATE	APPR

LICENSED PROFESSIONAL ENGINEER JITENDRA VALMIK 062-072817 OF ILLINOIS
EXP: 11/30/2027
SIGNED: 03/11/2026 M.A.

APPROVED
FOR COMMANDER NAVFAC
ACTIVITY
NATHANIEL PYRON, MILCON PLANNER, DPPH
SATISFACTORY TO DATE 3/10/2026
DES JV DRW CG CHK AP
PM/DM DKS/DMK
BRANCH MANAGER KYM
CHIEF ENG/ARCH KYM
FIRE PROTECTION RYO

DEPARTMENT OF THE NAVY
NAVFAC PACIFIC
NAVAL FACILITIES ENGINEERING SYSTEMS COMMAND ~ PACIFIC
NAVAL FACILITIES ENGINEERING SYSTEMS COMMAND
MAKALAPA, HAWAII
U.S. NAVSUPPACT
MCB CAMP BLAZ, GUAM
JFY 2022 PROJECT J-875
BATTLE STAFF TRAINING FACILITY
HVAC PIPING PLAN - FIRST FLOOR - AREA 'C'

SCALE: AS NOTED
EPROJECT NO.: 1696746
CONSTR. CONTR. NO.
NAVFAC DRAWING NO. 17322140
SHEET 300 OF 468
MP103

DRAWFORM REVISION: 25 AUGUST 2020

3/11/2026 4:38:18 PM MP103
C:\REVIT_2024_PROJECT_FILES\BLDG-J-875-1696746-M_7542_Jon_Koenig.rvt

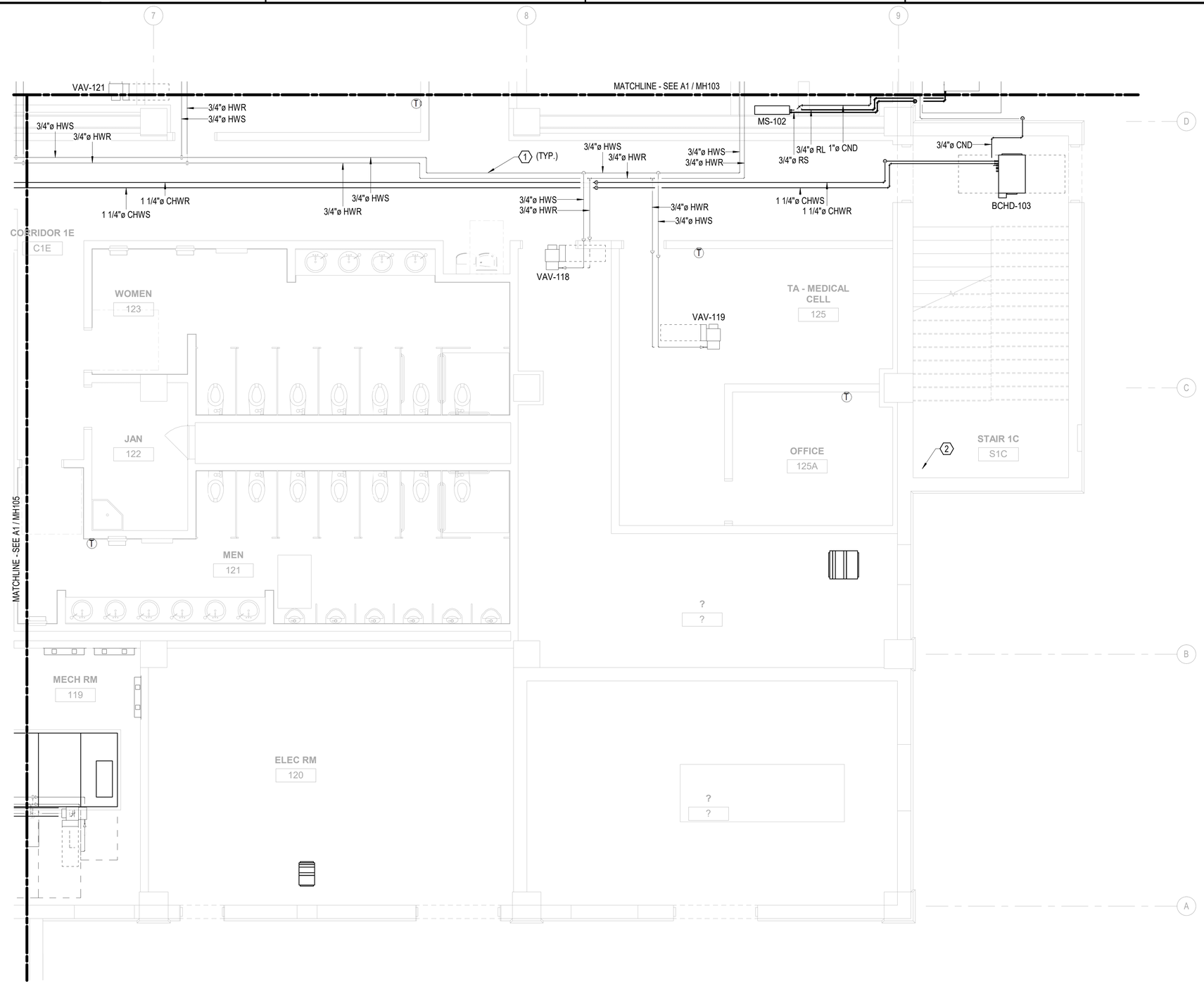

A1 **HVAC PIPING PLAN - FIRST FLOOR - AREA 'D'**

1/4" = 1'-0"

GENERAL NOTES

1. SEE M-001 FOR GENERAL MECHANICAL NOTES THAT SHALL APPLY TO ALL SHEETS UNLESS NOTED OTHERWISE.
2. CONTRACTOR SHALL REFER TO MECHANICAL DETAILS AND SPECIFICATIONS FOR ADDITIONAL INSTALLATION REQUIREMENTS.
3. ALL CONDENSATE PIPING SHALL BE INSTALLED AT 1/8" PER FT. SLOPE.
4. MOUNT ALL T-STATS NO HIGHER THAN 48" AFF.

KEY NOTES

1. PROVIDE NEW HOT WATER/ CHILLED WATER SUPPLY & RETURN PIPING AS INDICATED. INSULATE PIPING PER SPECIFICATIONS. INSTALL PER DETAIL. COORDINATE EXACT ROUTING IN FIELD WITH OTHER TRADES.
2. 3/4" CONDENSATE DRAIN FROM 3RD FLOOR STAIR FCU. TERNIMATE OUTSIDE WITH 90° DOWNWARD ELBOW.

KEY PLAN

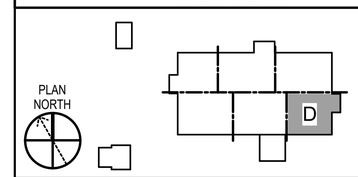

GRAPHIC SCALE(S)

1/4" = 1' - 0" 0 1' 5' 10' 15'

SYM	DESCRIPTION	DATE	APPR

NAVFAC

LICENSED PROFESSIONAL ENGINEER JITENDRA VALMIK 062-072817 OF ILLINOIS
EXP: 11/30/2027
SIGNED: 03/11/2026

ASMD LLC. A/E INFO

APPROVED
FOR COMMANDER NAVFAC
ACTIVITY
NATHANIEL PYRON, MILCON PLANNER, DPPH
SATISFACTORY TO DATE 3/10/2026
DES JV DRW CG CHK AP
PM/DM DKS/DMK
BRANCH MANAGER KYM
CHIEF ENG/ARCH KYM
FIRE PROTECTION RYO

DEPARTMENT OF THE NAVY
NAVFAC PACIFIC
NAVAL FACILITIES ENGINEERING SYSTEMS COMMAND
NAVAL FACILITIES ENGINEERING SYSTEMS COMMAND ~ PACIFIC
MAKALAPA, HAWAII
U.S. NAVSUPPACT
MCB CAMP BLAZ, GUAM
JFY 2022 PROJECT J-875
BATTLE STAFF TRAINING FACILITY
HVAC PIPING PLAN - FIRST FLOOR - AREA 'D'

SCALE: AS NOTED
EPROJECT NO.: 1696746
CONSTR. CONTR. NO.
NAVFAC DRAWING NO. 17322141
SHEET 301 OF 468
MP104
DRAWFORM REVISION: 25 AUGUST 2020

3/11/2026 4:39:23 PM MP104
C:\REVIT_2024_PROJECT_FILES\BLDG-J-875-1696746-M_7542_Jon_Koenig.rvt

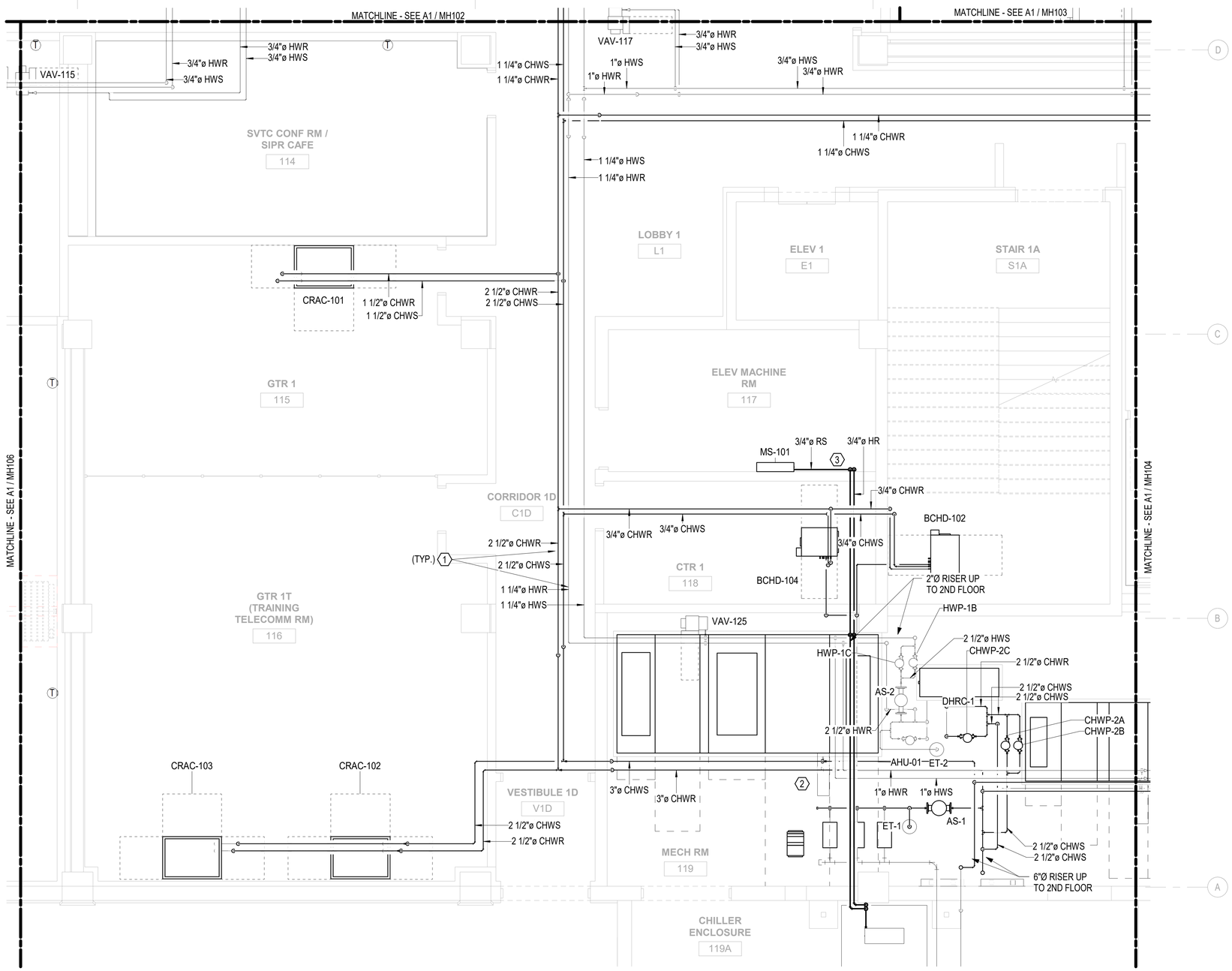

A1 HVAC PIPING PLAN - FIRST FLOOR - AREA 'E'

1/4" = 1'-0"

GENERAL NOTES

1. SEE M-001 FOR GENERAL MECHANICAL NOTES THAT SHALL APPLY TO ALL SHEETS UNLESS NOTED OTHERWISE.
2. CONTRACTOR SHALL REFER TO MECHANICAL DETAILS AND SPECIFICATIONS FOR ADDITIONAL INSTALLATION REQUIREMENTS.
3. ALL CONDENSATE PIPING SHALL BE INSTALLED AT 1/8" PER FT. SLOPE.
4. MOUNT ALL T-STATS NO HIGHER THAN 48" AFF.

KEY NOTES

1. PROVIDE NEW HOT WATER/ CHILLED WATER SUPPLY & RETURN PIPING AS INDICATED. INSULATE PIPING PER SPECIFICATIONS. INSTALL PER DETAIL. COORDINATE EXACT ROUTING IN FIELD WITH OTHER TRADES.
2. PROVIDE NEW CONDENSATE DRAIN AS INDICATED. MAINTAIN MIN. 1/8" PER FOOT PITCH IN THE DIRECTION OF FLOW. INSULATE PIPING PER SPECIFICATIONS. TERMINATE PIPING AT FLOOR/ OPEN HUB DRAIN WITH 1" AIR GAP.
3. PROVIDE NEW REFRIGERANT PIPING AS INDICATED. VERIFY EXACT PIPE SIZES IN FIELD BASED ON ACTUAL ROUTING. INSULATE PIPING PER SPECIFICATIONS. INSTALL PER DETAIL. COORDINATE EXACT ROUTING IN FIELD WITH OTHER TRADES.

KEY PLAN

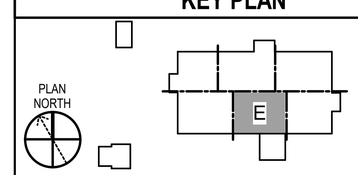

GRAPHIC SCALE(S)

1/4" = 1' - 0" 0 1' 5' 10' 15'

SYM	DESCRIPTION	DATE	APPR

NAVFAC

LICENSED PROFESSIONAL ENGINEER JITENDRA VALMIK 062-072817 OF ILLINOIS
EXP: 11/30/2027
SIGNED: 03/11/2026

ASMD LLC.

APPROVED
FOR COMMANDER NAVFAC
ACTIVITY
NATHANIEL PYRON, MILCON PLANNER, DPPH
SATISFACTORY TO DATE 3/10/2026
DES JV DRW CG CHK AP
PMDM DKS/DMK
BRANCH MANAGER KYM
CHIEF ENG/ARCH KYM
FIRE PROTECTION RYO

DEPARTMENT OF THE NAVY
NAVAL FACILITIES ENGINEERING SYSTEMS COMMAND ~ PACIFIC
NAVFAC PACIFIC
U.S. NAVSUPPACT

NAVAL FACILITIES ENGINEERING SYSTEMS COMMAND
MAKALAPA, HAWAII
MCB CAMP BLAZ, GUAM

JFY 2022 PROJECT J-875
BATTLE STAFF TRAINING FACILITY

HVAC PIPING PLAN - FIRST FLOOR - AREA 'E'

SCALE: AS NOTED
EPROJECT NO.: 1696746
CONSTR. CONTR. NO.
NAVFAC DRAWING NO. 17322142
SHEET 302 OF 468
MP105

DRAWFORM REVISION: 25 AUGUST 2020

3/11/2026 4:38:28 PM MP105
C:\REVIT_2024_PROJECT_FILES\BLDG-J-875-1696746-M_7542_Jon_Koenig.rvt

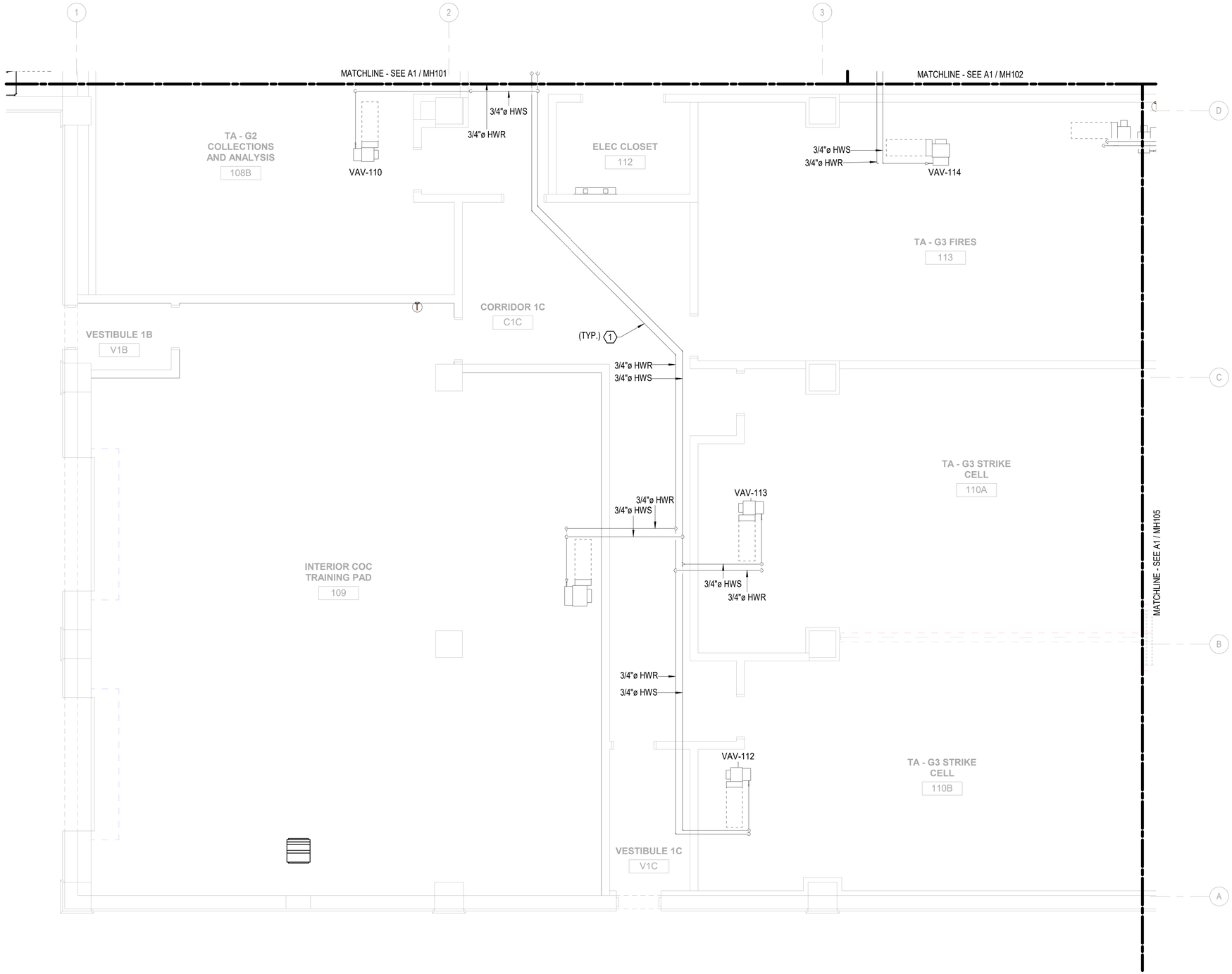

A1 **HVAC PIPING PLAN - FIRST FLOOR - AREA 'F'**

1/4" = 1'-0"

GENERAL NOTES

1. SEE M-001 FOR GENERAL MECHANICAL NOTES THAT SHALL APPLY TO ALL SHEETS UNLESS NOTED OTHERWISE.
2. CONTRACTOR SHALL REFER TO MECHANICAL DETAILS AND SPECIFICATIONS FOR ADDITIONAL INSTALLATION REQUIREMENTS.
3. ALL CONDENSATE PIPING SHALL BE INSTALLED AT 1/8" PER FT. SLOPE.
4. MOUNT ALL T-STATS NO HIGHER THAN 48" AFF.

KEY NOTES

1. PROVIDE NEW HOT WATER/ CHILLED WATER SUPPLY & RETURN PIPING AS INDICATED. INSULATE PIPING PER SPECIFICATIONS. INSTALL PER DETAIL. COORDINATE EXACT ROUTING IN FIELD WITH OTHER TRADES.

KEY PLAN

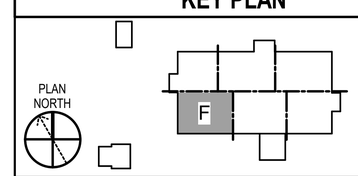

GRAPHIC SCALE(S)

1/4" = 1' - 0" 0 1' 5' 10' 15'

SYM	DESCRIPTION	DATE	APPR

NAVFAC

LICENSED PROFESSIONAL ENGINEER JITENDRA VALMIK 062-072817 STATE OF ILLINOIS
EXP: 11/30/2027
SIGNED: 03/11/2026

ASMD LLC. AE INFO

APPROVED

FOR COMMANDER NAVFAC

ACTIVITY: NATHANIEL PYRON, MILCON PLANNER, DPPH

SATISFACTORY TO DATE 3/10/2026

DES JV | DRW CG | CHK AP

PM/DM DKS/DMK

BRANCH MANAGER KYM

CHIEF ENG/ARCH KYM

FIRE PROTECTION RYO

DEPARTMENT OF THE NAVY
NAVAL FACILITIES ENGINEERING SYSTEMS COMMAND
NAVFAC PACIFIC
NAVAL FACILITIES ENGINEERING SYSTEMS COMMAND ~ PACIFIC
MAKALAPA, HAWAII
U.S. NAVSUPPACT
MCB CAMP BLAZ, GUAM

JFY 2022 PROJECT J-875
BATTLE STAFF TRAINING FACILITY

HVAC PIPING PLAN - FIRST FLOOR - AREA 'F'

SCALE: AS NOTED

EPROJECT NO.: 1696746

CONSTR. CONTR. NO.

NAVFAC DRAWING NO. 17322143

SHEET 303 OF 468

MP106

DRAWFORM REVISION: 25 AUGUST 2020

3/11/2026 4:38:32 PM MP106
C:\REVIT_2024_PROJECT_FILES\BLDG-J-875-1696746-M_7542_Jon_Koenig.rvt

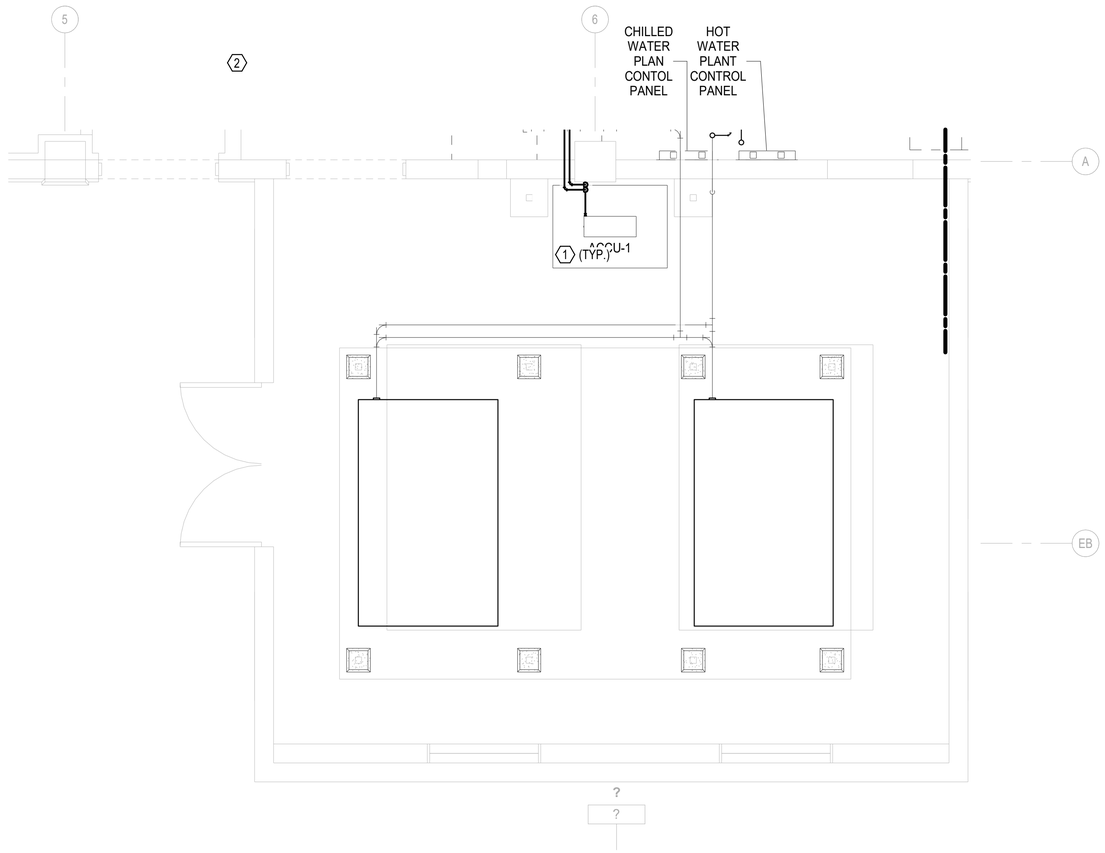

B1 HVAC PIPING PLAN - FIRST FLOOR - MECHANICAL ENCLOSURE

1/4" = 1'-0"

GENERAL NOTES

1. SEE M-001 FOR GENERAL MECHANICAL NOTES THAT SHALL APPLY TO ALL SHEETS UNLESS NOTED OTHERWISE.
2. CONTRACTOR SHALL REFER TO MECHANICAL DETAILS AND SPECIFICATIONS FOR ADDITIONAL INSTALLATION REQUIREMENTS.
3. ALL CONDENSATE PIPING SHALL BE INSTALLED AT 1/8" PER FT. SLOPE.
4. MOUNT ALL T-STATS NO HIGHER THAN 48" AFF.

(X) KEY NOTES

1. PROVIDE NEW CHILLED WATER SUPPLY & RETURN PIPING AS INDICATED. INSULATE PIPING PER SPECIFICATIONS. INSTALL PER DETAIL. COORDINATE EXACT ROUTING IN FIELD WITH OTHER TRADES.
2. PROVIDE NEW REFRIGERANT PIPING AS INDICATED. VERIFY EXACT PIPE SIZES IN FIELD BASED ON ACTUAL ROUTING. INSULATE PIPING PER SPECIFICATIONS. INSTALL PER DETAIL. COORDINATE EXACT ROUTING IN FIELD WITH OTHER TRADES.

KEY PLAN

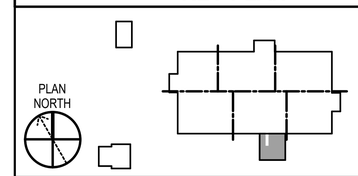

GRAPHIC SCALE(S)

1/4" = 1' - 0" 0 1' 5' 10' 15'

SYM	DESCRIPTION	DATE	APPR

NAVFAC

LICENSED PROFESSIONAL ENGINEER
JITENDRA VALMIK
062-072817
OF ILLINOIS
EXP: 11/30/2027
SIGNED: 03/11/2026 M.A.

ASMD LLC.
A/E INFO

APPROVED

FOR COMMANDER NAVFAC

ACTIVITY
NATHANIEL PYRON, MILCON PLANNER, DPPH

SATISFACTORY TO DATE 3/10/2026

DES JV | DRW CG | CHK AP

PM/DM DKS/DMK

BRANCH MANAGER KYM

CHIEF ENG/ARCH KYM

FIRE PROTECTION RYO

DEPARTMENT OF THE NAVY
NAVAL FACILITIES ENGINEERING SYSTEMS COMMAND
NAVFAC PACIFIC
U.S. NAVSUPPACT

NAVAL FACILITIES ENGINEERING SYSTEMS COMMAND ~ PACIFIC
MAKALAPA, HAWAII

MCB CAMP BLAZ, GUAM

JFY 2022 PROJECT J-875
BATTLE STAFF TRAINING FACILITY

HVAC PIPING PLAN - FIRST FLOOR - MECHANICAL ENCLOSURE

SCALE: AS NOTED

EPROJECT NO.: 1696746

CONSTR. CONTR. NO.

NAVFAC DRAWING NO.
17322144

SHEET 304 OF 468

MP107

DRAWFORM REVISION: 25 AUGUST 2020

3/11/2026 4:38:35 PM MP107
C:\REVIT_2024_PROJECT_FILES\BLDG-J-875-1696746-M_7542_Jon_Koenig.rvt

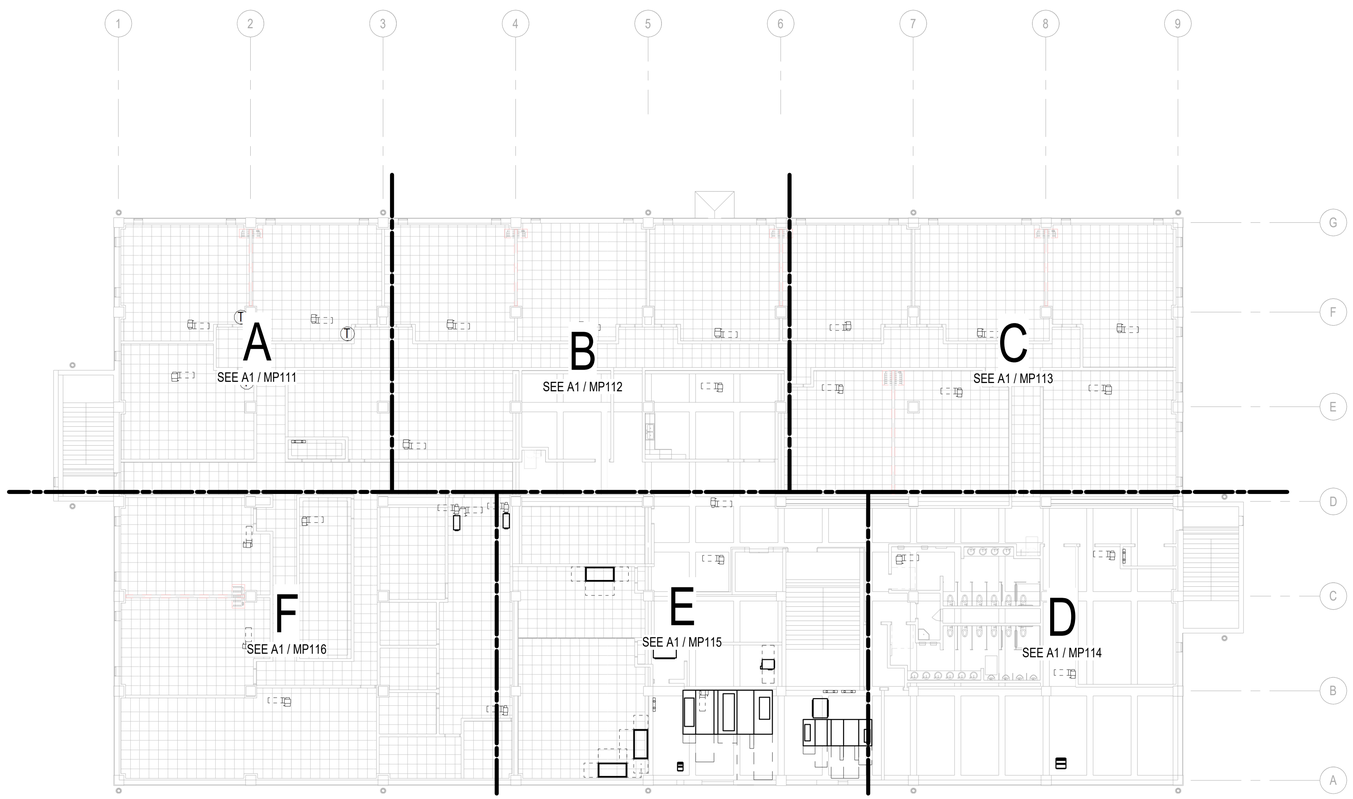

B1 COMPOSITE HVAC PIPING PLAN - SECOND FLOOR

1/16" = 1'-0"

GENERAL NOTES

KEY PLAN

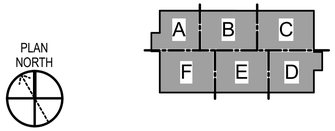

GRAPHIC SCALE(S)

1/16" = 1' - 0" 0 5' 10' 20' 30' 60'

SYM	DESCRIPTION	DATE	APPR

NAVFAC

LICENSED PROFESSIONAL ENGINEER
JITENDRA VALMIK
062-072817
OF ILLINOIS
EXP: 11/30/2027
SIGNED: 03/11/2026 M.A.

ASMD LLC.
A/E INFO

APPROVED
FOR COMMANDER NAVFAC
ACTIVITY
NATHANIEL PYRON, MILCON PLANNER, DPPH
SATISFACTORY TO DATE 3/10/2026
DES JV DRW CG CHK AP
PM/DM DKS/DMK
BRANCH MANAGER KYM
CHIEF ENG/ARCH KYM
FIRE PROTECTION RYO

DEPARTMENT OF THE NAVY
NAVFAC PACIFIC
U.S. NAVSUPPACT
NAVAL FACILITIES ENGINEERING SYSTEMS COMMAND
NAVAL FACILITIES ENGINEERING SYSTEMS COMMAND – PACIFIC
MAKALAPA, HAWAII
MCB CAMP BLAZ, GUAM
JFY 2022 PROJECT J-875
BATTLE STAFF TRAINING FACILITY
COMPOSITE HVAC PIPING PLAN - SECOND FLOOR

SCALE: AS NOTED
EPROJECT NO.: 1696746
CONSTR. CONTR. NO.
NAVFAC DRAWING NO. 17322145
SHEET 305 OF 468
MP110

DRAWFORM REVISION: 25 AUGUST 2020

MP110
3/11/2026 4:38:39 PM
C:\REVIT_2024_PROJECT_FILES\BLDG-J875-1696746-M_7542_Jon_Koenig.rvt

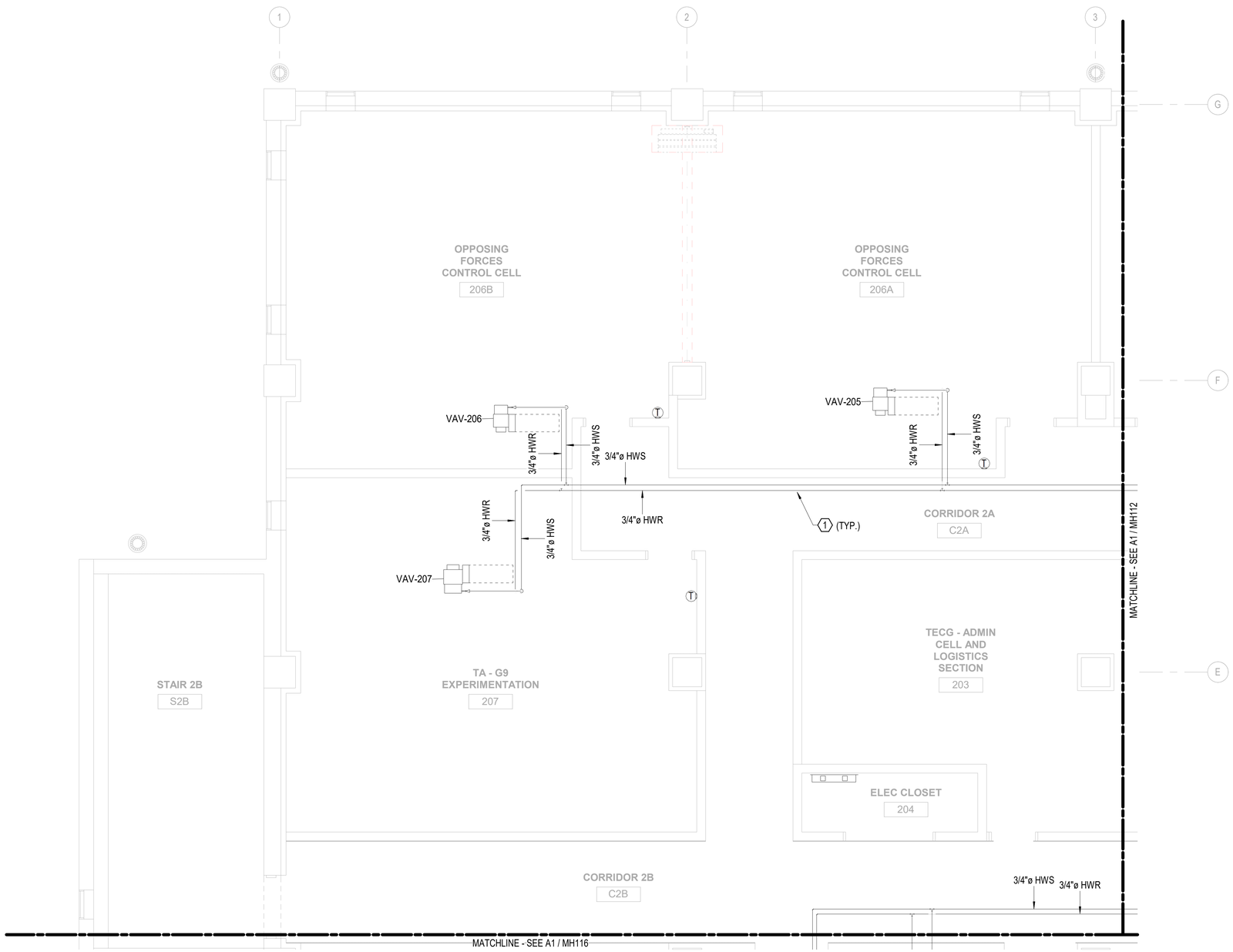

A1 HVAC PIPING PLAN - SECOND FLOOR - AREA 'A'

1/4" = 1'-0"

GENERAL NOTES

1. SEE M-001 FOR GENERAL MECHANICAL NOTES THAT SHALL APPLY TO ALL SHEETS UNLESS NOTED OTHERWISE.
2. CONTRACTOR SHALL REFER TO MECHANICAL DETAILS AND SPECIFICATIONS FOR ADDITIONAL INSTALLATION REQUIREMENTS.
3. ALL CONDENSATE PIPING SHALL BE INSTALLED AT 1/8" PER FT. SLOPE.
4. MOUNT ALL T-STATS NO HIGHER THAN 48" AFF.

KEY NOTES

1. PROVIDE NEW HOT WATER/ CHILLED WATER SUPPLY & RETURN PIPING AS INDICATED. INSULATE PIPING PER SPECIFICATIONS. INSTALL PER DETAIL. COORDINATE EXACT ROUTING IN FIELD WITH OTHER TRADES.

KEY PLAN

PLAN NORTH

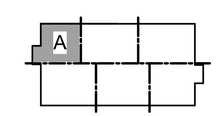

GRAPHIC SCALE(S)

1/4" = 1' - 0"

0 1' 5' 10' 15'

SYM	DESCRIPTION	DATE	APPR

NAVFAC

LICENSED PROFESSIONAL ENGINEER
JITENDRA VALMIK
062-072817
OF ILLINOIS
EXP: 11/30/2027
SIGNED: 03/11/2026

ASMD LLC.

APPROVED

FOR COMMANDER NAVFAC

ACTIVITY
NATHANIEL PYRON, MILCON PLANNER, DPPH

SATISFACTORY TO DATE 3/10/2026

DES JV DRW CG CHK AP

PM/DM DKS/DMK

BRANCH MANAGER KYM

CHIEF ENG/ARCH KYM

FIRE PROTECTION RYO

DEPARTMENT OF THE NAVY
NAVFAC PACIFIC
NAVAL FACILITIES ENGINEERING SYSTEMS COMMAND
U.S. NAVSUPPACT
NAVAL FACILITIES ENGINEERING SYSTEMS COMMAND – PACIFIC
MAKALAPA, HAWAII
MCB CAMP BLAZ, GUAM

JFY 2022 PROJECT J-875
BATTLE STAFF TRAINING FACILITY

HVAC PIPING PLAN - SECOND FLOOR - AREA 'A'

SCALE: AS NOTED

EPROJECT NO.: 1696746

CONSTR. CONTR. NO.

NAVFAC DRAWING NO.
17322146

SHEET 306 OF 468

MP111

DRAWFORM REVISION: 25 AUGUST 2020

3/11/2026 4:38:43 PM MP111
C:\REVIT_2024_PROJECT_FILES\BLDG-J875-1696746-M_7542_Jon_Koenig.rvt

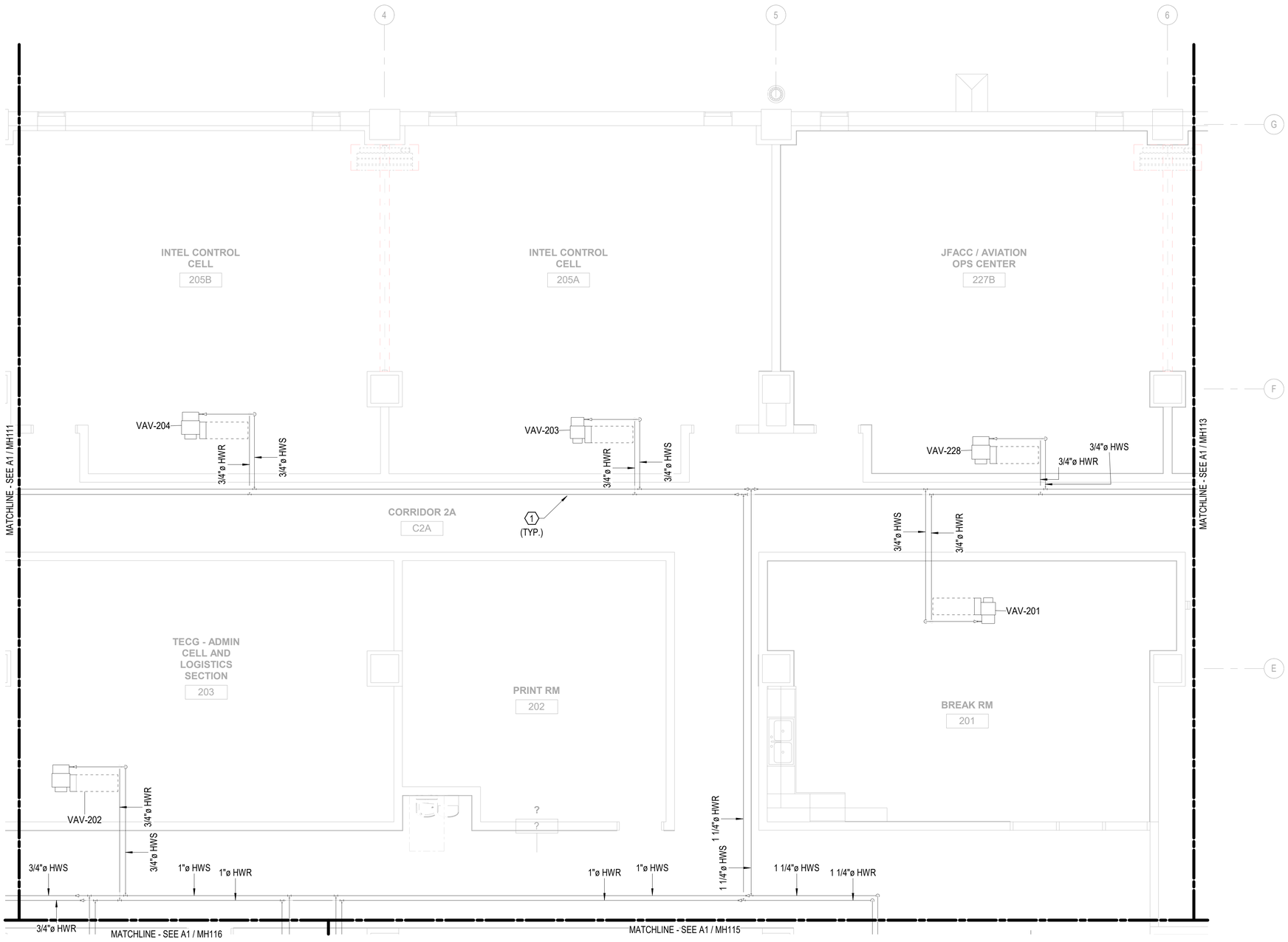

A1 HVAC PIPING PLAN - SECOND FLOOR - AREA 'B'

1/4" = 1'-0"

GENERAL NOTES

1. SEE M-001 FOR GENERAL MECHANICAL NOTES THAT SHALL APPLY TO ALL SHEETS UNLESS NOTED OTHERWISE.
2. CONTRACTOR SHALL REFER TO MECHANICAL DETAILS AND SPECIFICATIONS FOR ADDITIONAL INSTALLATION REQUIREMENTS.
3. ALL CONDENSATE PIPING SHALL BE INSTALLED AT 1/8" PER FT. SLOPE.
4. MOUNT ALL T-STATS NO HIGHER THAN 48" AFF.

KEY NOTES

1. PROVIDE NEW HOT WATER/ CHILLED WATER SUPPLY & RETURN PIPING AS INDICATED. INSULATE PIPING PER SPECIFICATIONS. INSTALL PER DETAIL. COORDINATE EXACT ROUTING IN FIELD WITH OTHER TRADES.

KEY PLAN

PLAN NORTH

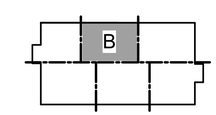

GRAPHIC SCALE(S)

1/4" = 1' - 0" 0 1' 5' 10' 15'

SYM	DESCRIPTION	DATE	APPR

NAVFAC

LICENSED PROFESSIONAL ENGINEER JITENDRA VALMIK 062-072817 STATE OF ILLINOIS
EXP: 11/30/2027
SIGNED: 03/11/2026

ASMD LLC.

APPROVED
FOR COMMANDER NAVFAC
ACTIVITY
NATHANIEL PYRON, MILCON PLANNER, DPPH
SATISFACTORY TO DATE 3/10/2026
DES JV DRW CG CHK AP
PM/DM DKS/DMK
BRANCH MANAGER KYM
CHIEF ENG/ARCH KYM
FIRE PROTECTION RYO

DEPARTMENT OF THE NAVY
NAVFAC PACIFIC
NAVAL FACILITIES ENGINEERING SYSTEMS COMMAND ~ PACIFIC
NAVAL FACILITIES ENGINEERING SYSTEMS COMMAND
MAKALAPA, HAWAII
U.S. NAVSUPPACT
MCB CAMP BLAZ, GUAM
JFY 2022 PROJECT J-875
BATTLE STAFF TRAINING FACILITY
HVAC PIPING PLAN - SECOND FLOOR - AREA 'B'

SCALE: AS NOTED
EPROJECT NO.: 1696746
CONSTR. CONTR. NO.
NAVFAC DRAWING NO. 17322147
SHEET 307 OF 468
MP112
DRAWFORM REVISION: 25 AUGUST 2020

3/11/2026 4:38:47 PM MP112
C:\REVIT_2024_PROJECT_FILES\BLDG-J-875-1696746-M_7542_Jon_Koenig.rvt

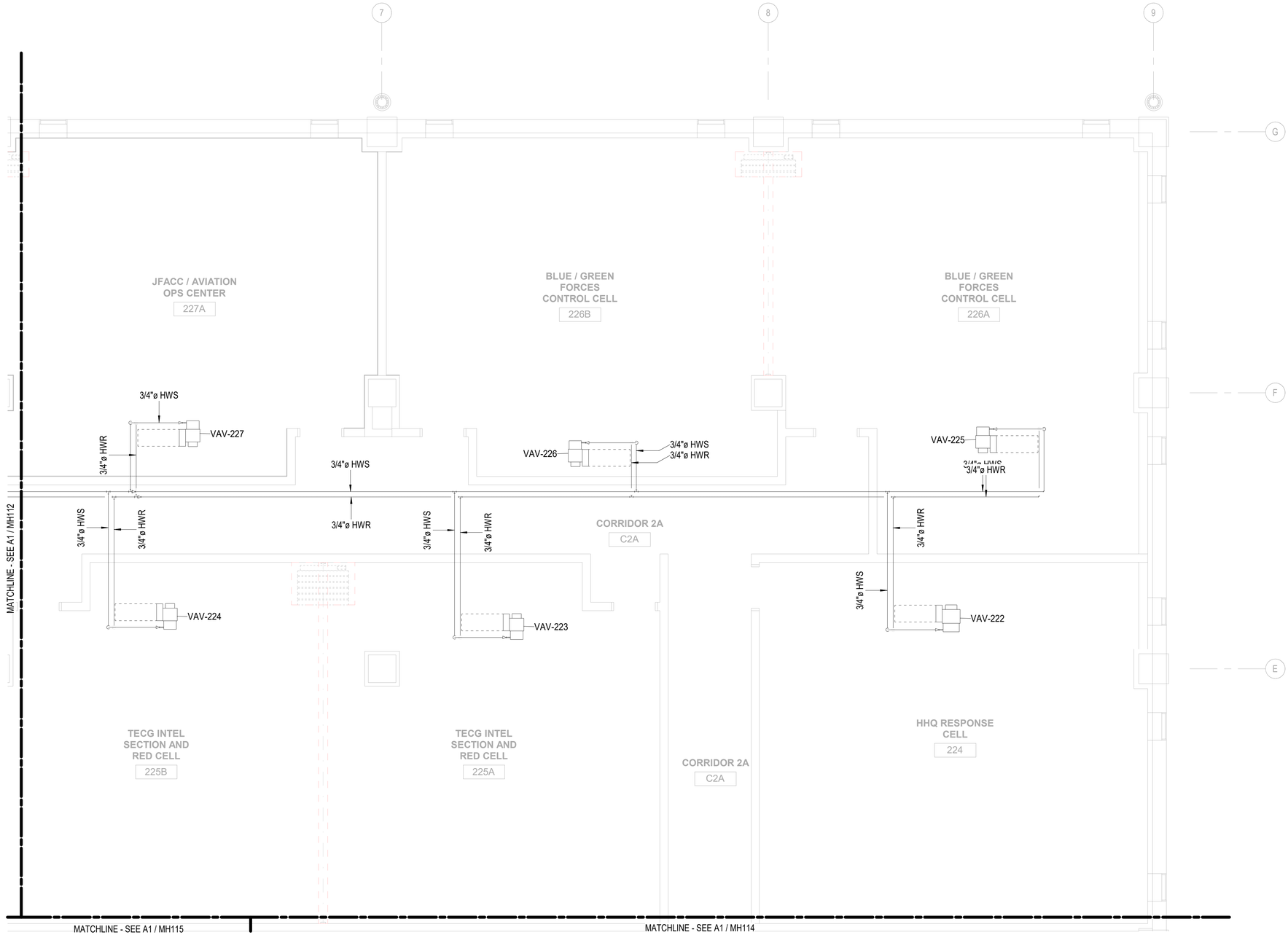

A1 **HVAC PIPING PLAN - SECOND FLOOR - AREA 'C'**

1/4" = 1'-0"

GENERAL NOTES

1. SEE M-001 FOR GENERAL MECHANICAL NOTES THAT SHALL APPLY TO ALL SHEETS UNLESS NOTED OTHERWISE.
2. CONTRACTOR SHALL REFER TO MECHANICAL DETAILS AND SPECIFICATIONS FOR ADDITIONAL INSTALLATION REQUIREMENTS.
3. ALL CONDENSATE PIPING SHALL BE INSTALLED AT 1/8" PER FT. SLOPE.
4. MOUNT ALL T-STATS NO HIGHER THAN 48" AFF.

KEY NOTES

KEY PLAN

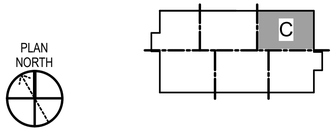

GRAPHIC SCALE(S)

1/4" = 1' - 0" 0 1' 5' 10' 15'

SYM	DESCRIPTION	DATE	APPR

NAVFAC

LICENSED PROFESSIONAL ENGINEER JITENDRA VALMIK 062-072817 OF ILLINOIS
EXP: 11/30/2027
SIGNED: 03/11/2026 REV.

ASMD LLC. A/E INFO

APPROVED

FOR COMMANDER NAVFAC

ACTIVITY: NATHANIEL PYRON, MILCON PLANNER, DPPH

SATISFACTORY TO DATE 3/10/2026

DES JV | DRW CG | CHK AP

PM/DM DKS/DMK

BRANCH MANAGER KYM

CHIEF ENG/ARCH KYM

FIRE PROTECTION RYO

DEPARTMENT OF THE NAVY
NAVFAC PACIFIC
NAVAL FACILITIES ENGINEERING SYSTEMS COMMAND
NAVAL FACILITIES ENGINEERING SYSTEMS COMMAND ~ PACIFIC
MAKALAPA, HAWAII
U.S. NAVSUPPACT
MCB CAMP BLAZ, GUAM

JFY 2022 PROJECT J-875
BATTLE STAFF TRAINING FACILITY

HVAC PIPING PLAN - SECOND FLOOR - AREA 'C'

SCALE: AS NOTED

EPROJECT NO.: 1696746

CONSTR. CONTR. NO.

NAVFAC DRAWING NO. 17322148

SHEET 308 OF 468

MP113

DRAWFORM REVISION: 25 AUGUST 2020

3/11/2026 4:38:51 PM MP113
C:\REVIT_2024_PROJECT_FILES\BLDG-J-875-1696746-M_7542_Jon_Koenig.rvt

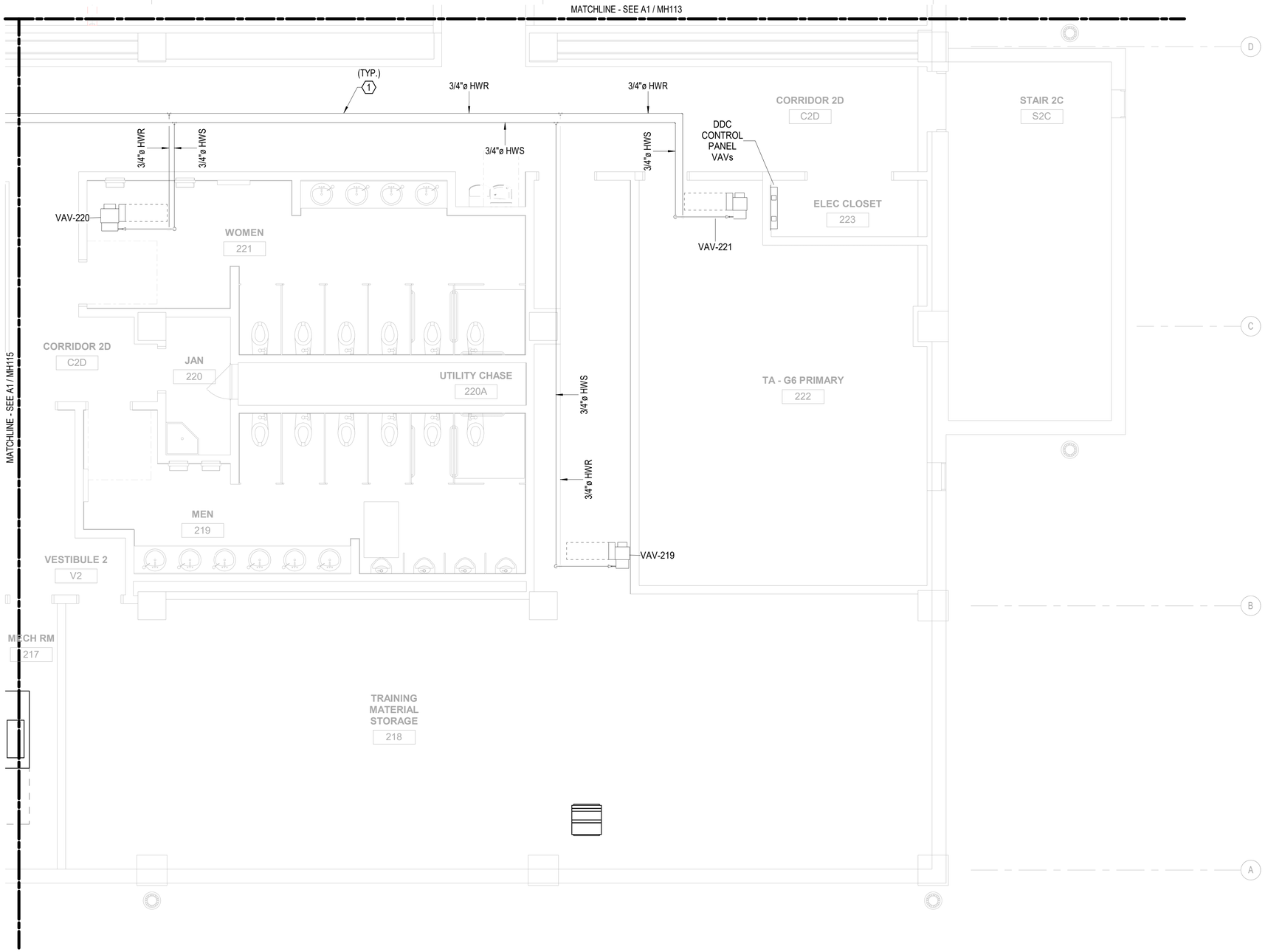

A1 HVAC PIPING PLAN - SECOND FLOOR - AREA 'D'

1/4" = 1'-0"

GENERAL NOTES

1. SEE M-001 FOR GENERAL MECHANICAL NOTES THAT SHALL APPLY TO ALL SHEETS UNLESS NOTED OTHERWISE.
2. CONTRACTOR SHALL REFER TO MECHANICAL DETAILS AND SPECIFICATIONS FOR ADDITIONAL INSTALLATION REQUIREMENTS.
3. ALL CONDENSATE PIPING SHALL BE INSTALLED AT 1/8" PER FT. SLOPE.
4. MOUNT ALL T-STATS NO HIGHER THAN 48" AFF.

KEY NOTES

1. PROVIDE NEW HOT WATER/ CHILLED WATER SUPPLY & RETURN PIPING AS INDICATED. INSULATE PIPING PER SPECIFICATIONS. INSTALL PER DETAIL. COORDINATE EXACT ROUTING IN FIELD WITH OTHER TRADES.

KEY PLAN

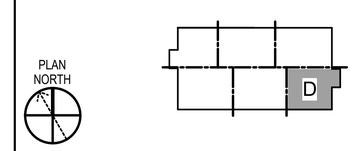

GRAPHIC SCALE(S)

1/4" = 1' - 0" 0 1' 5' 10' 15'

SYM	DESCRIPTION	DATE	APPR

LICENSED PROFESSIONAL ENGINEER
JITENDRA VALMIK
062-072817
OF ILLINOIS
EXP: 11/30/2027
SIGNED: 03/11/2026

APPROVED
FOR COMMANDER NAVFAC
ACTIVITY
NATHANIEL PYRON, MILCON PLANNER, DPPH
SATISFACTORY TO DATE 3/10/2026
DES JV DRW CG CHK AP
PM/DM DKS/DMK
BRANCH MANAGER KYM
CHIEF ENG/ARCH KYM
FIRE PROTECTION RYO

DEPARTMENT OF THE NAVY
NAVFAC PACIFIC
NAVAL FACILITIES ENGINEERING SYSTEMS COMMAND ~ PACIFIC
NAVAL FACILITIES ENGINEERING SYSTEMS COMMAND
MAKALAPA, HAWAII
U.S. NAVSUPPACT
MCB CAMP BLAZ, GUAM
JFY 2022 PROJECT J-875
BATTLE STAFF TRAINING FACILITY
HVAC PIPING PLAN - SECOND FLOOR - AREA 'D'

SCALE: AS NOTED
EPROJECT NO.: 1696746
CONSTR. CONTR. NO.
NAVFAC DRAWING NO. 17322149
SHEET 309 OF 468
MP114
DRAWFORM REVISION: 25 AUGUST 2020

3/11/2026 4:39:55 PM MP114
C:\REVIT_2024_PROJECT_FILES\BLDG-J875-1696746-M_7542_Jon_Koenig.rvt

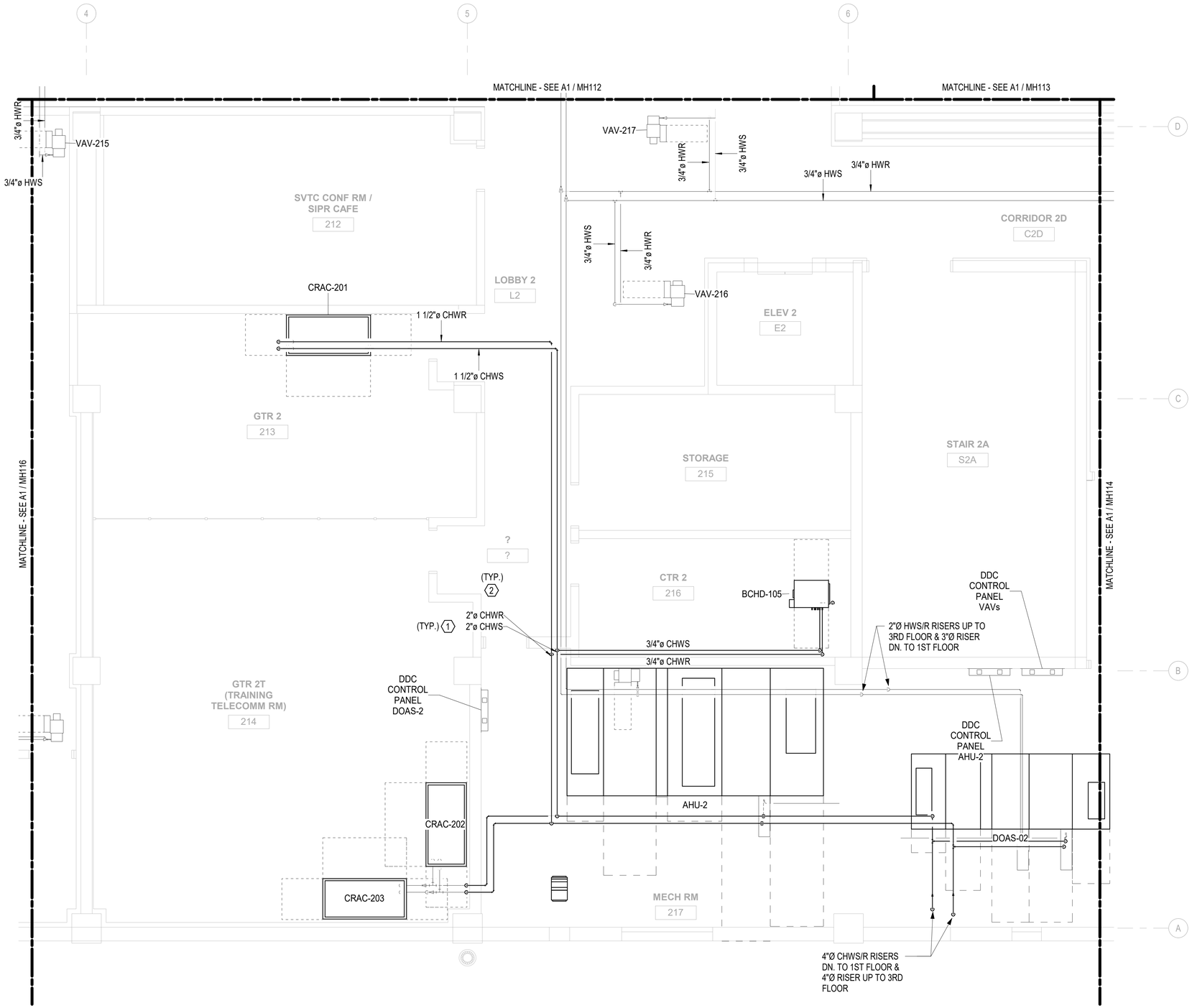

A1 HVAC PIPING PLAN - SECOND FLOOR - AREA 'E'

1/4" = 1'-0"

GENERAL NOTES

1. SEE M-001 FOR GENERAL MECHANICAL NOTES THAT SHALL APPLY TO ALL SHEETS UNLESS NOTED OTHERWISE.
2. CONTRACTOR SHALL REFER TO MECHANICAL DETAILS AND SPECIFICATIONS FOR ADDITIONAL INSTALLATION REQUIREMENTS.
3. ALL CONDENSATE PIPING SHALL BE INSTALLED AT 1/8" PER FT. SLOPE.
4. MOUNT ALL T-STATS NO HIGHER THAN 48" AFF.

(X) KEY NOTES

1. PROVIDE NEW HOT WATER/ CHILLED WATER SUPPLY & RETURN PIPING AS INDICATED. INSULATE PIPING PER SPECIFICATIONS. INSTALL PER DETAIL. COORDINATE EXACT ROUTING IN FIELD WITH OTHER TRADES.
2. PROVIDE NEW CONDENSATE DRAIN AS INDICATED. MAINTAIN MIN. 1/8" PER FOOT PITCH IN THE DIRECTION OF FLOW. INSULATE PIPING PER SPECIFICATIONS. TERMINATE PIPING AT FLOOR/ OPEN HUB DRAIN WITH 1" AIR GAP.

KEY PLAN

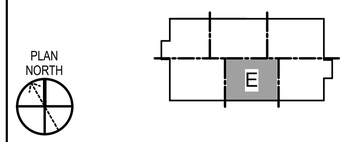

GRAPHIC SCALE(S)

1/4" = 1' - 0" 0 1' 5' 10' 15'

SYM	DESCRIPTION	DATE	APPR

NAVFAC

LICENSED PROFESSIONAL ENGINEER JITENDRA VALMIK 062-072817 OF ILLINOIS
EXP: 11/30/2027
SIGNED: 03/11/2026 M.A.

ASMD LLC. A/E INFO

APPROVED
FOR COMMANDER NAVFAC
ACTIVITY
NATHANIEL PYRON, MILCON PLANNER, DPPH
SATISFACTORY TO DATE 3/10/2026
DES JV | DRW CG | CHK AP
PM/DM DKS/DMK
BRANCH MANAGER KYM
CHIEF ENG/ARCH KYM
FIRE PROTECTION RYO

DEPARTMENT OF THE NAVY
NAVAL FACILITIES ENGINEERING SYSTEMS COMMAND
NAVFAC PACIFIC
U.S. NAVSUPPACT

NAVAL FACILITIES ENGINEERING SYSTEMS COMMAND ~ PACIFIC
MAKALAPA, HAWAII

MCB CAMP BLAZ, GUAM

JFY 2022 PROJECT J-875
BATTLE STAFF TRAINING FACILITY

HVAC PIPING PLAN - SECOND FLOOR - AREA 'E'

SCALE: AS NOTED
EPROJECT NO.: 1696746
CONSTR. CONTR. NO.
NAVFAC DRAWING NO. 17322150
SHEET 310 OF 468
MP115

DRAWFORM REVISION: 25 AUGUST 2020

3/11/2026 4:38:59 PM MP115
C:\REVIT_2024_PROJECT_FILES\BLDG-J-875-1696746-M_7542_Jon_Koenig.rvt

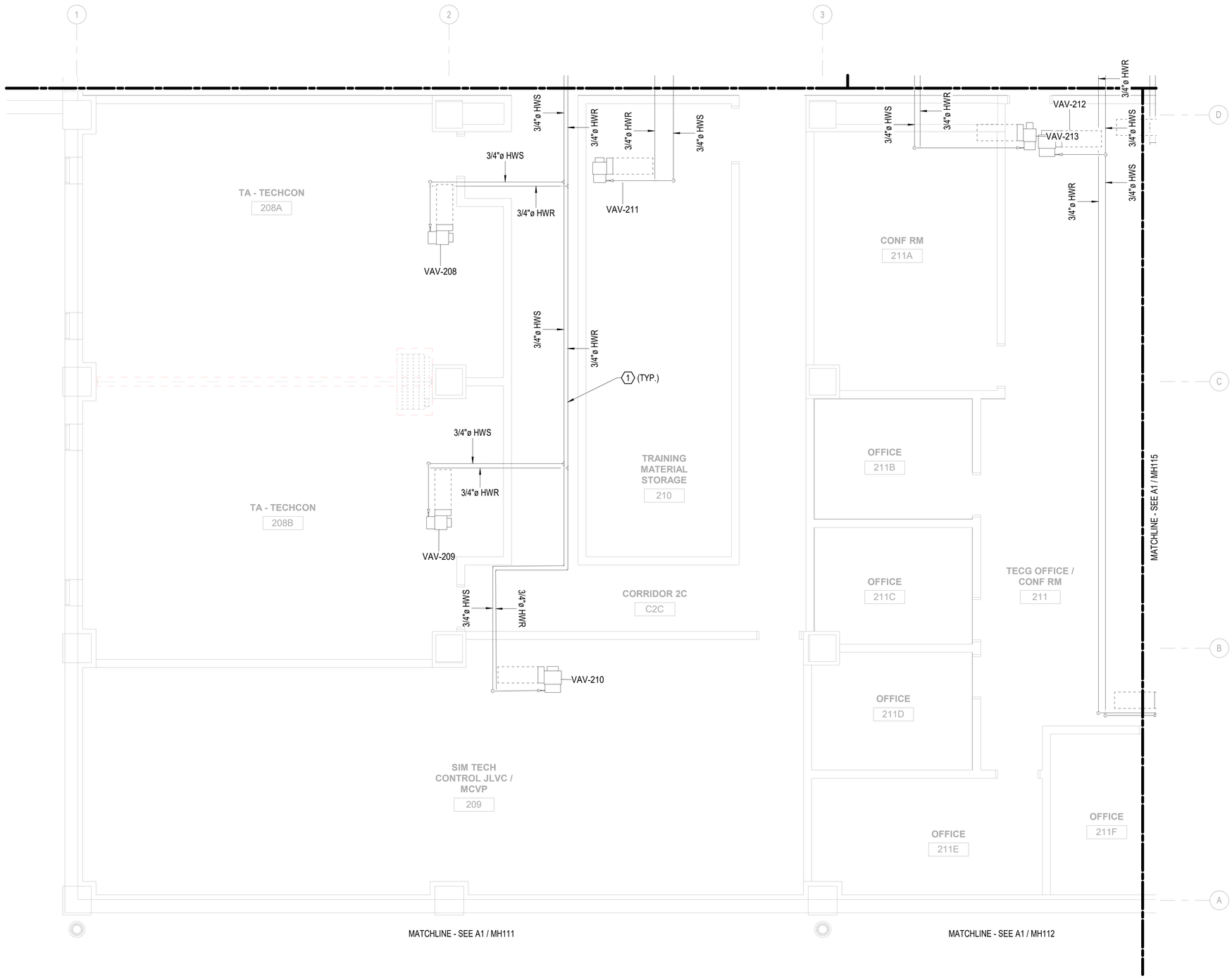

A1 HVAC PIPING PLAN - SECOND FLOOR - AREA 'F'

1/4" = 1'-0"

GENERAL NOTES

1. SEE M-001 FOR GENERAL MECHANICAL NOTES THAT SHALL APPLY TO ALL SHEETS UNLESS NOTED OTHERWISE.
2. CONTRACTOR SHALL REFER TO MECHANICAL DETAILS AND SPECIFICATIONS FOR ADDITIONAL INSTALLATION REQUIREMENTS.
3. ALL CONDENSATE PIPING SHALL BE INSTALLED AT 1/8" PER FT. SLOPE.
4. MOUNT ALL T-STATS NO HIGHER THAN 48" AFF.

(X) KEY NOTES

1. PROVIDE NEW HOT WATER/ CHILLED WATER SUPPLY & RETURN PIPING AS INDICATED. INSULATE PIPING PER SPECIFICATIONS. INSTALL PER DETAIL. COORDINATE EXACT ROUTING IN FIELD WITH OTHER TRADES.

KEY PLAN

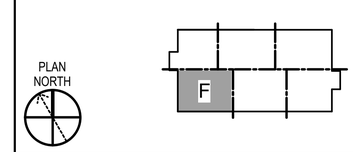

GRAPHIC SCALE(S)

1/4" = 1' - 0" 0 1' 5' 10' 15'

SYM	DESCRIPTION	DATE	APPR

NAVFAC

LICENSED PROFESSIONAL ENGINEER
JITENDRA VALMIK
062-072817
OF ILLINOIS
EXP: 11/30/2027
SIGNED: 03/11/2026

ASMD LLC.
A/E INFO

APPROVED
FOR COMMANDER NAVFAC
ACTIVITY
NATHANIEL PYRON, MILCON PLANNER, DPPH
SATISFACTORY TO DATE 3/10/2026
DES JV | DRW CG | CHK AP
PM/DM DKS/DMK
BRANCH MANAGER KYM
CHIEF ENG/ARCH KYM
FIRE PROTECTION RYO

DEPARTMENT OF THE NAVY
NAVFAC PACIFIC
NAVAL FACILITIES ENGINEERING SYSTEMS COMMAND ~ PACIFIC
NAVAL FACILITIES ENGINEERING SYSTEMS COMMAND
MAKALAPA, HAWAII
U.S. NAVSUPPACT
MCB CAMP BLAZ, GUAM
JFY 2022 PROJECT J-875
BATTLE STAFF TRAINING FACILITY
HVAC PIPING PLAN - SECOND FLOOR - AREA 'F'

SCALE: AS NOTED
EPROJECT NO.: 1696746
CONSTR. CONTR. NO.
NAVFAC DRAWING NO. 17322151
SHEET 311 OF 468
MP116
DRAWFORM REVISION: 25 AUGUST 2020

3/11/2026 4:39:03 PM MP116
C:\REVIT_2024_PROJECT_FILES\BLDG-J-875-1696746-AL_7542_Jon_Koenig.rvt

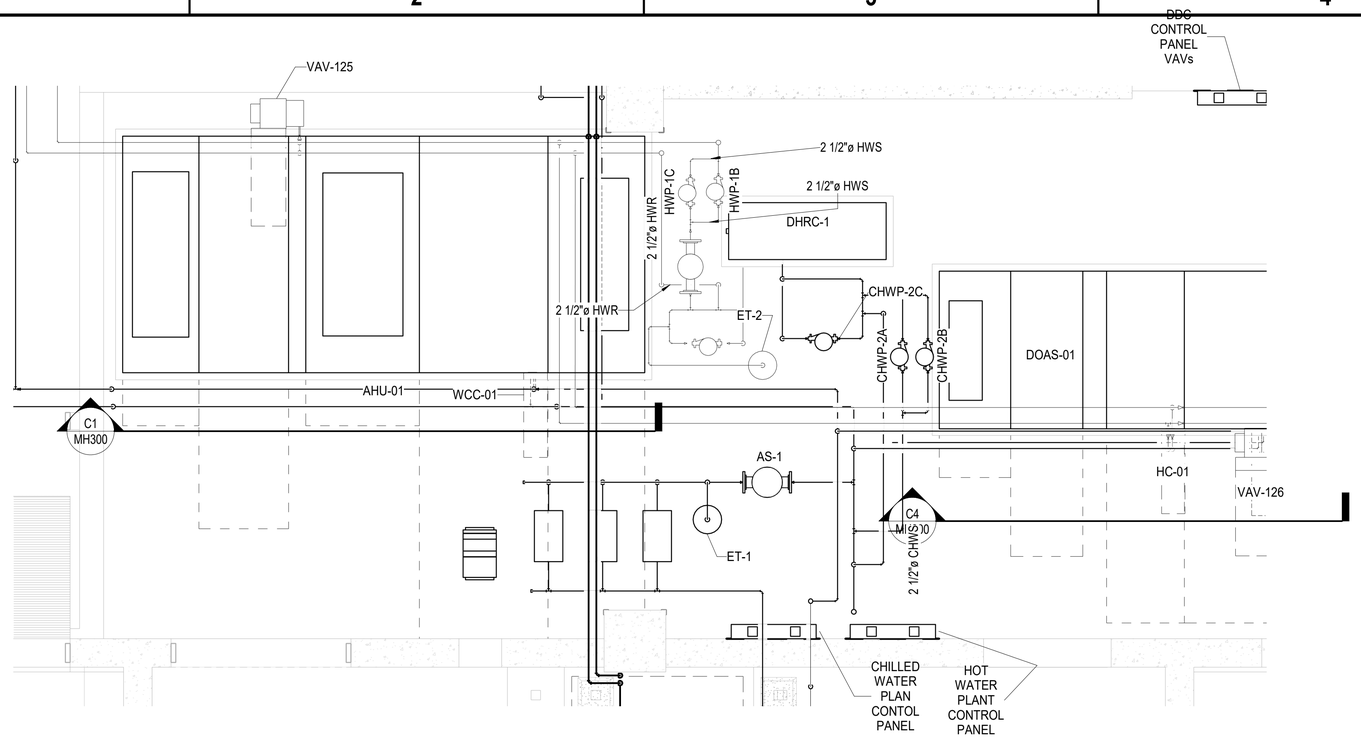

C1 FIRST FLOOR MECHANICAL ROOM PIPING ENLARGED FLOOR PLAN

3/8" = 1'-0"

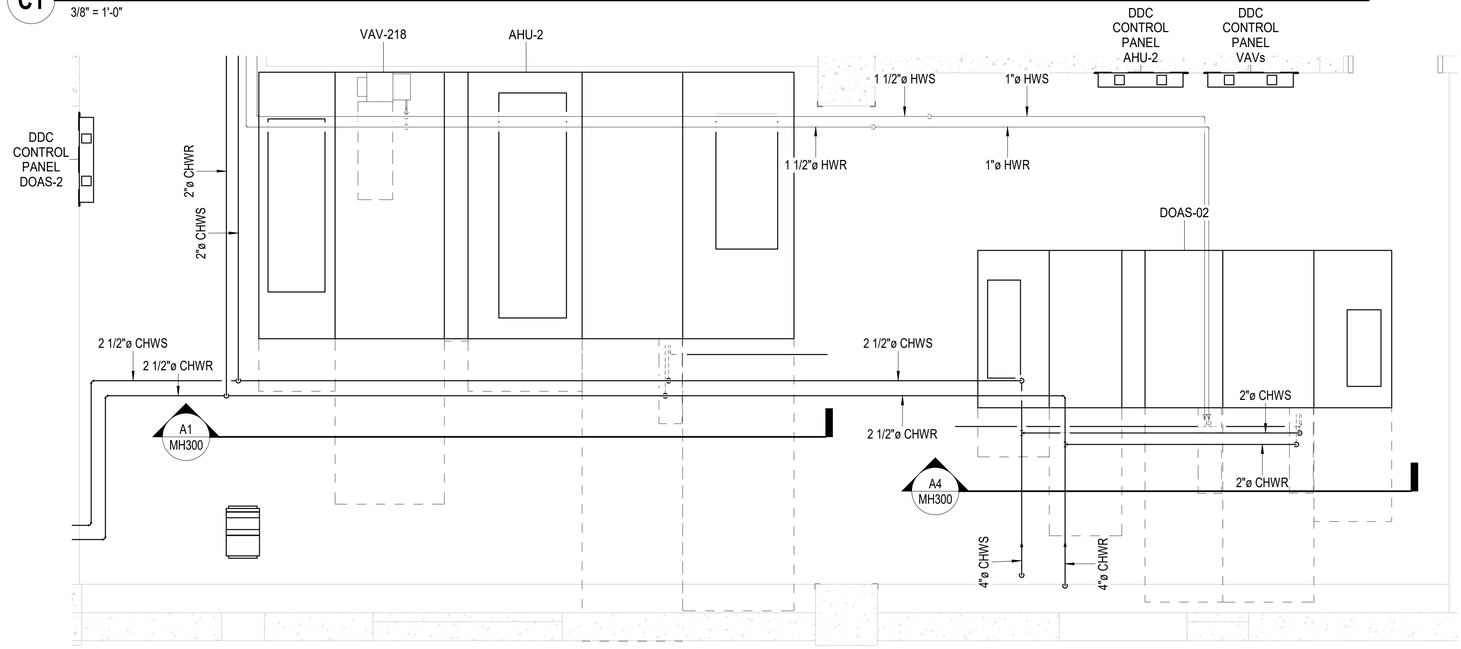

A1 SECOND FLOOR MECHANICAL ROOM PIPING ENLARGED FLOOR PLAN

3/8" = 1'-0"

GENERAL NOTES

1. ALL DUCTWORK AND EQIUPMENT SHOWN ON THIS DRAWING IS DIAGRAMMATIC. LOCATE ALL DUCTWORK AND EQUIPMENT SO AS TO CLEAR ALL OBSTACLES.
2. ALL WORK TO BE PERFORMED IN ACCORDANCE WITH APPLICABLE FEDERAL, STATE, AND LOCAL CODES.
3. COORDINATE ALL HVAC INSTALLATIONS WITH ALL APPLICABLE TRADES.
4. VERIFY ALL DIMENSIONS AND CONDITIONS PRIOR TO THE START OF INSTALLATION OF ALL MECHANICAL AND PLUMBING EQUIPMENT. CONSTRUCTION DISCREPANCIES TO BE BROUGHT TO THE IMMEDIATE ATTENTION OF THE CONTRACTING OFFICER FOR A RESOLUTION.
5. COORDINATE ALL REQUIRED CONDUIT, PIPING AND CHASES WITH OTHER TRADES & SUB-CONTRACTORS.

KEY NOTES

KEY PLAN

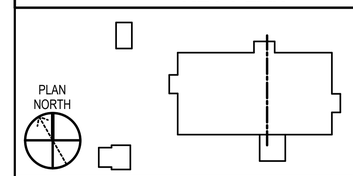

GRAPHIC SCALE(S)

SYM	DESCRIPTION	DATE	APPR

NAVFAC

LICENSED PROFESSIONAL ENGINEER
JITENDRA VALMIK
062-072817
STATE OF ILLINOIS
EXP: 11/30/2027
SIGNED: 03/11/2026

ASMD LLC.

A/E INFO

APPROVED

FOR COMMANDER NAVFAC

ACTIVITY
NATHANIEL PYRON, MILCON PLANNER, DPPH

SATISFACTORY TO DATE 3/10/2026

DES	JV	DRW	AS	CHK	AP

PMDM	DKS/DMK
BRANCH MANAGER	KYM
CHIEF ENG/ARCH	KYM
FIRE PROTECTION	RYO

DEPARTMENT OF THE NAVY
NAVAL FACILITIES ENGINEERING SYSTEMS COMMAND
NAVFAC PACIFIC

NAVAL FACILITIES ENGINEERING SYSTEMS COMMAND ~ PACIFIC
MAKALAPA, HAWAII

U.S. NAVSUPPACT

MCB CAMP BLAZ, GUAM

JFY 2022 PROJECT J-875
BATTLE STAFF TRAINING FACILITY

ENLARGED FLOOR PLAN - SHEET 1

SCALE: AS NOTED

EPROJECT NO.: 1696746

CONSTR. CONTR. NO.

NAVFAC DRAWING NO.
17322152

SHEET 312 OF 468

MP400

DRAWFORM REVISION: 25 AUGUST 2020

3/11/2026 4:39:09 PM MP400
C:\REVIT_2024_PROJECT_FILES\BLDG-J875-1696746-NL_75\42_Jon_Koenig.rvt