SOLICITATION/CONTRACT/ORDER FOR COMMERCIAL ITEMS
OFFEROR TO COMPLETE BLOCKS 12, 17, 23, 24, & 30

1. REQUISITION NUMBER: IHS1523918

PAGE 1 OF 55

2. CONTRACT NO.

3. AWARD/ EFFECTIVE DATE

4. ORDER NUMBER

5. SOLICITATION NUMBER: 75H71026Q00195

6. SOLICITATION ISSUE DATE: 06/24/2026

7. FOR SOLICITATION INFORMATION CALL: a. NAME: FLORA WASHINGTON

b. TELEPHONE NUMBER (No collect calls)

8. OFFER DUE DATE/LOCAL TIME: 07/09/2026 1700 MT

9. ISSUED BY CODE 25

Kayenta Health Center
Acquisition Department
PO Box 368
Highway 160, Mile Post 394.3
Kayenta AZ 86033

10. THIS ACQUISITION IS ☐ UNRESTRICTED OR ☒ SET ASIDE: % FOR:

☐ SMALL BUSINESS
☐ HUBZONE SMALL BUSINESS
☐ SERVICE-DISABLED VETERAN-OWNED SMALL BUSINESS
☐ WOMEN-OWNED SMALL BUSINESS (WOSB) ELIGIBLE UNDER THE WOMEN-OWNED SMALL BUSINESS PROGRAM
☐ EDWOSB
☐ 8(A)

NAICS: 238220

SIZE STANDARD: $19

11. DELIVERY FOR FOB DESTINATION UNLESS BLOCK IS MARKED
☒ SEE SCHEDULE

12. DISCOUNT TERMS

☐ 13a. THIS CONTRACT IS A RATED ORDER UNDER DPAS (15 CFR 700)

13b. RATING

14. METHOD OF SOLICITATION
☒ RFQ ☐ IFB ☐ RFP

15. DELIVER TO CODE

Kayenta Health Center
Highway 160, Mile Post 394.3
Kayenta AZ 86033

16. ADMINISTERED BY CODE 25

Kayenta Health Center
Acquisition Department
PO Box 368
Highway 160, Mile Post 394.3
Kayenta AZ 86033

17a. CONTRACTOR/ OFFEROR CODE

FACILITY CODE

TELEPHONE NO.

☐ 17b. CHECK IF REMITTANCE IS DIFFERENT AND PUT SUCH ADDRESS IN OFFER

18a. PAYMENT WILL BE MADE BY CODE

18b. SUBMIT INVOICES TO ADDRESS SHOWN IN BLOCK 18a UNLESS BLOCK BELOW IS CHECKED ☐ SEE ADDENDUM

19. ITEM NO.	20. SCHEDULE OF SUPPLIES/SERVICES	21. QUANTITY	22. UNIT	23. UNIT PRICE	24. AMOUNT
	This is an Indian-Owned, Small Business Economic Enterprise (ISBEE) This contract is subject to the electronic payment process by the Department of Treasury. All invoices complying to the requirements at 52.212-4(g) must be submitted through www.ipp.gov. For additional information, refer to the incorporated clause at 352.232-71 Electronic Submission of Payment Requests (APR 2026). *(Use Reverse and/or Attach Additional Sheets as Necessary)*				

25. ACCOUNTING AND APPROPRIATION DATA

26. TOTAL AWARD AMOUNT *(For Govt. Use Only)*

☒ 27a. SOLICITATION INCORPORATES BY REFERENCE FAR 52.212-1, 52.212-4. FAR 52.212-3 AND 52.212-5 ARE ATTACHED. ADDENDA ☒ ARE ☐ ARE NOT ATTACHED.

☐ 27b. CONTRACT/PURCHASE ORDER INCORPORATES BY REFERENCE FAR 52.212-4. FAR 52.212-5 IS ATTACHED. ADDENDA ☐ ARE ☐ ARE NOT ATTACHED.

☐ 28. CONTRACTOR IS REQUIRED TO SIGN THIS DOCUMENT AND RETURN _____ COPIES TO ISSUING OFFICE. CONTRACTOR AGREES TO FURNISH AND DELIVER ALL ITEMS SET FORTH OR OTHERWISE IDENTIFIED ABOVE AND ON ANY ADDITIONAL SHEETS SUBJECT TO THE TERMS AND CONDITIONS SPECIFIED.

☐ 29. AWARD OF CONTRACT: _____ OFFER DATED _____. YOUR OFFER ON SOLICITATION (BLOCK 5), INCLUDING ANY ADDITIONS OR CHANGES WHICH ARE SET FORTH HEREIN, IS ACCEPTED AS TO ITEMS:

30a. SIGNATURE OF OFFEROR/CONTRACTOR

31a. UNITED STATES OF AMERICA *(SIGNATURE OF CONTRACTING OFFICER)*

30b. NAME AND TITLE OF SIGNER *(Type or print)*

30c. DATE SIGNED

31b. NAME OF CONTRACTING OFFICER *(Type or print)*: JERLYN R. BEGAY

31c. DATE SIGNED

19. ITEM NO.	20. SCHEDULE OF SUPPLIES/SERVICES	21. QUANTITY	22. UNIT	23. UNIT PRICE	24. AMOUNT
	Period of Performance: 07/20/2026 to 12/31/2026				
1	The Contractor shall remove and install new cooling system per the Statement of Work (Attachment A) for the Kayenta Health Center in Kayenta, Arizona 86033.				
2	Labor Costs				
3	Navajo Nation Tax @ 6%				

32a. QUANTITY IN COLUMN 21 HAS BEEN

☐ RECEIVED ☐ INSPECTED ☐ ACCEPTED, AND CONFORMS TO THE CONTRACT, EXCEPT AS NOTED: _____

32b. SIGNATURE OF AUTHORIZED GOVERNMENT REPRESENTATIVE	32c. DATE	32d. PRINTED NAME AND TITLE OF AUTHORIZED GOVERNMENT REPRESENTATIVE

32e. MAILING ADDRESS OF AUTHORIZED GOVERNMENT REPRESENTATIVE	32f. TELEPHONE NUMBER OF AUTHORIZED GOVERNMENT REPRESENTATIVE
	32g. E-MAIL OF AUTHORIZED GOVERNMENT REPRESENTATIVE

33. SHIP NUMBER	34. VOUCHER NUMBER	35. AMOUNT VERIFIED CORRECT FOR	36. PAYMENT	37. CHECK NUMBER
☐ PARTIAL ☐ FINAL			☐ COMPLETE ☐ PARTIAL ☐ FINAL	

38. S/R ACCOUNT NUMBER	39. S/R VOUCHER NUMBER	40. PAID BY

41a. I CERTIFY THIS ACCOUNT IS CORRECT AND PROPER FOR PAYMENT		42a. RECEIVED BY *(Print)*	
41b. SIGNATURE AND TITLE OF CERTIFYING OFFICER	41c. DATE	42b. RECEIVED AT *(Location)*	
		42c. DATE REC'D *(YY/MM/DD)*	42d. TOTAL CONTAINERS

SECTION B – CONTINUATION OF SF-1449

THIS PAGE IS INTENTIONALLY LEFT BLANK

SECTION C – CONTRACT CLAUSES

52.212-4	CONTRACT TERMS AND CONDITIONS – COMMERCIAL PRODUCTS AND COMMERCIAL SERVICES	NOV 2025 (DEVIATION)

The following Federal Acquisition Regulation clauses also apply:

☐	52.203-3	GRATUITIES	APR 1984
☐	52.203-6	RESTRICTIONS ON SUBCONTRACTOR SALES TO THE GOVERNMENT	NOV 2021
☒	52.203-12	LIMITATION OF PAYMENTS TO INFLUENCE CERTAIN FEDERAL TRANSACTIONS	JUN 2020
☐	52.203-13	CONTRACTOR CODE OF BUSINESS ETHICS AND CONDUCT	NOV 2021
☐	52.203-16	PREVENTING PERSONAL CONFLICTS OF INTEREST	JUN 2020
☒	52.203-17	CONTRACTOR EMPLOYEE WHISTLEBLOWER RIGHTS	NOV 2023
☒	52.203-19	PROHIBITION ON REQUIRING CERTAIN INTERNAL CONFIDENTIALITY AGREEMENTS OR STATEMENTS	JAN 2017
☒	52.204-9	PERSONAL IDENTITY VERIFICATION OF CONTRACTOR PERSONNEL	JAN 2011
☒	52.204-13	SYSTEM FOR AWARD MANAGEMENT MAINTENANCE	NOV 2025 (DEVIATION)
☐	52.204-14	SERVICE CONTRACT REPORTING REQUIREMENTS	NOV 2025 (DEVIATION)
☐	52.204-15	SERVICE CONTRACT REPORTING REQUIREMENTS FOR INDEFINITE-DELIVERY CONTRACTS	NOV 2025 (DEVIATION)
☐	52.204-91	CONTRACTOR IDENTIFICATION	NOV 2025 (DEVIATION)
☒	52.209-6	PROTECTING THE GOVERNMENT'S INTEREST WHEN SUBCONTRACTING WITH CONTRACTORS DEBARRED, SUSPENDED, OR PROPOSED FOR DEBARMENT	NOV 2025 (DEVIATION)
☐	52.209-9	UPDATES OF PUBLICLY AVAILABLE INFORMATION REGARDING RESPONSIBILITY MATTERS	NOV 2025 (DEVIATION)
☒	52.209-10	PROHIBITION ON CONTRACTING WITH INVERTED DOMESTIC CORPORATIONS	NOV 2025 (DEVIATION)
☐	52.213-1	RESERVED	
☐	52.219-3	NOTICE OF HUBZONE SET-ASIDE OR SOLE-SOURCE AWARD	NOV 2025 (DEVIATION)
☐	52.219-6	NOTICE OF TOTAL SMALL BUSINESS SET-ASIDE	NOV 2025 (DEVIATION)
☐	52.219-6 Alt I	NOTICE OF TOTAL SMALL BUSINESS SET-ASIDE, WITH ALTERNATE I	NOV 2025 (DEVIATION)

☐	52.219-7	NOTICE OF PARTIAL SMALL BUSINESS SET-ASIDE	NOV 2020
☐	52.219-7 Alt I	NOTICE OF PARTIAL SMALL BUSINESS SET-ASIDE, WITH ALTERNATE I	MAR 2020
☐	52.219-8	UTILIZATION OF SMALL BUSINESS CONCERNS	NOV 2025 (DEVIATION)
☐	52.219-9	SMALL BUSINESS SUBCONTRACTING PLAN	NOV 2025 (DEVIATION)
☐	52.219-9 Alt I	SMALL BUSINESS SUBCONTRACTING PLAN, WITH ALTERNATE I	NOV 2025 (DEVIATION)
☐	52.219-9 Alt II	SMALL BUSINESS SUBCONTRACTING PLAN, WITH ALTERNATE II	NOV 2025 (DEVIATION)
☐	52.219-9 Alt III	SMALL BUSINESS SUBCONTRACTING PLAN, WITH ALTERNATE III	NOV 2025 (DEVIATION)
☐	52.219-9 Alt IV	SMALL BUSINESS SUBCONTRACTING PLAN, WITH ALTERNATE IV	NOV 2025 (DEVIATION)
☐	52.219-13	NOTICE OF SET-ASIDE OF ORDERS	MAR 2020
☐	52.219-13 Alt I	RESERVED	
☐	52.219-16	LIQUIDATED DAMAGES—SUBCONTRACTING PLAN	NOV 2025 (DEVIATION)
☐	52.219-27	NOTICE OF SET-ASIDE FOR, OR SOLE-SOURCE AWARD TO, SERVICE-DISABLED VETERAN-OWNED SMALL BUSINESS (SDVOSB) CONCERNS ELIGIBLE UNDER THE SDVOSB PROGRAM	NOV 2025 (DEVIATION)
☒	52.219-28	POSTAWARD SMALL BUSINESS PROGRAM REREPRESENTATION	NOV 2025 (DEVIATION)
☐	52.219-28 Alt I	POSTAWARD SMALL BUSINESS PROGRAM REREPRESENTATION, WITH ALTERNATE I	NOV 2025 (DEVIATION)
☐	52.219-29	NOTICE OF SET-ASIDE FOR, OR SOLE-SOURCE AWARD TO, ECONOMICALLY DISADVANTAGED WOMEN-OWNED SMALL BUSINESS CONCERNS	NOV 2025 (DEVIATION)
☐	52.219-30	NOTICE OF SET-ASIDE FOR, OR SOLE-SOURCE AWARD TO, WOMEN-OWNED SMALL BUSINESS CONCERNS ELIGIBLE UNDER THE WOMEN-OWNED SMALL BUSINESS PROGRAM	NOV 2025 (DEVIATION)
☐	52.219-33	NONMANUFACTURER RULE	NOV 2025 (DEVIATION)
☒	52.222-3	CONVICT LABOR	NOV 2025 (DEVIATION)
☒	52.222-19	CHILD LABOR—COOPERATION WITH AUTHORITIES AND REMEDIES	NOV 2025 (DEVIATION)
☒	52.222-35	EQUAL OPPORTUNITY FOR VETERANS	NOV 2025 (DEVIATION)
☒	52.222-36	EQUAL OPPORTUNITY FOR WORKERS WITH DISABILITIES	NOV 2025 (DEVIATION)
☐	52.222-36 ALT I	EQUAL OPPORTUNITY FOR WORKERS WITH DISABILITIES, WITH ALTERNATE I	JUL 2014
☒	52.222-37	EMPLOYMENT REPORTS ON VETERANS	NOV 2025 (DEVIATION)

☐	52.222-40	NOTIFICATION OF EMPLOYEE RIGHTS UNDER THE NATIONAL LABOR RELATIONS ACT	NOV 2025 (DEVIATION)
☒	52.222-41	SERVICE CONTRACT LABOR STANDARDS	NOV 2025 (DEVIATION)
☐	52.222-43	FAIR LABOR STANDARDS ACT AND SERVICE CONTRACT LABOR STANDARDS-PRICE ADJUSTMENT (MULTIPLE YEAR AND OPTION CONTRACTS)	NOV 2025 (DEVIATION)
☐	52.222-44	FAIR LABOR STANDARDS ACT AND SERVICE CONTRACT LABOR STANDARDS-PRICE ADJUSTMENT	NOV 2025 (DEVIATION)
☒	52.222-50	COMBATING TRAFFICKING IN PERSONS	NOV 2025 (DEVIATION)
☐	52.222-50 Alt I	COMBATING TRAFFICKING IN PERSONS	NOV 2025 (DEVIATION)
☐	52.222-51	EXEMPTION FROM APPLICATION OF THE SERVICE CONTRACT LABOR STANDARDS TO CONTRACTS FOR MAINTENANCE, CALIBRATION, OR REPAIR OF CERTAIN EQUIPMENT—REQUIREMENTS	NOV 2025 (DEVIATION)
☐	52.222-53	EXEMPTION FROM APPLICATION OF THE SERVICE CONTRACT LABOR STANDARDS TO CONTRACTS FOR CERTAIN SERVICES—REQUIREMENTS	NOV 2025 (DEVIATION)
☒	52.222-54	EMPLOYMENT ELIGIBILITY VERIFICATION	NOV 2025 (DEVIATION)
☒	52.222-55	MINIMUM WAGES FOR CONTRACTOR WORKERS UNDER EXECUTIVE ORDER 14026	NOV 2025 (DEVIATION)
☒	52.222-62	PAID SICK LEAVE UNDER EXECUTIVE ORDER 13706	NOV 2025 (DEVIATION)
☒	52.222-90	ADDRESSING DEI DISCIMINATION BY FEDERAL CONTRACTORS	APR 2026 (DEVIATION)
☒	52.223-2	REPORTING OF BIOBASED PRODUCTS UNDER SERVICE AND CONSTRUCTION CONTRACTS	NOV 2025 (DEVIATION)
☒	52.223-5	POLLUTION PREVENTION AND RIGHT-TO-KNOW INFORMATION	MAY 2024
☒	52.223-11	OZONE-DEPLETING SUBSTANCES	NOV 2025 (DEVIATION)
☒	52.223-12	MAINTENANCE, SERVICE, REPAIR, OR DISPOSAL OF REFRIGERATION EQUIPMENT AND AIR CONDITIONERS	NOV 2025 (DEVIATION)
☒	52.223-23	SUSTAINABLE PRODUCTS	NOV 2025 (DEVIATION)
☐	52.224-1	PRIVACY ACT NOTIFICATION	APR 1984
☐	52.224-2	PRIVACY ACT	APR 1984
☐	52.224-3	PRIVACY TRAINING	JAN 2017
☐	52.224-3 ALT I	PRIVACY TRAINING, WITH ALTERNATE I	JAN 2017
☐	52.225-1	BUY AMERICAN-SUPPLIES	NOV 2025 (DEVIATION)
☐	52.225-1 Alt I	BUY AMERICAN-SUPPLIES, WITH ALTERNATE I	OCT 2022

☐	52.225-3	BUY AMERICAN-FREE TRADE AGREEMENTS-ISRAELI TRADE ACT	NOV 2025 (DEVIATION)
	52.225-3 ALT I	RESERVED	
☐	52.225-3 Alt II	BUY AMERICAN-FREE TRADE AGREEMENTS-ISRAELI TRADE ACT, WITH ALTERNATE II	NOV 2025 (DEVIATION)
☐	52.225-3 Alt III	BUY AMERICAN-FREE TRADE AGREEMENTS-ISRAELI TRADE ACT, WITH ALTERNATE III	NOV 2025 (DEVIATION)
☐	52.225-3 Alt IV	BUY AMERICAN-FREE TRADE AGREEMENTS-ISRAELI TRADE ACT, WITH ALTERNATE IV	NOV 2025 (DEVIATION)
☒	52.225-5	TRADE AGREEMENTS	NOV 2023
☐	52.225-14	INCONSISTENCY BETWEEN ENGLISH VERSION AND TRANSLATION OF CONTRACT	FEB 2000
☐	52.225-19	CONTRACTOR PERSONNEL IN A DESIGNATED OPERATIONAL AREA OR SUPPORTING A DIPLOMATIC OR CONSULAR MISSION OUTSIDE THE UNITED STATES	MAY 2020
☐	52.225-26	CONTRACTORS PERFORMING PRIVATE SECURITY FUNCTIONS OUTSIDE THE UNITED STATES	OCT 2016
☒	52.226-1	UTILIZATION OF INDIAN ORGANIZATIONS AND INDIAN-OWNED ECONOMIC ENTERPRISES	NOV 2025 (DEVIATION)
☐	52.226-5	RESTRICTIONS ON SUBCONTRACTING OUTSIDE DISASTER OR EMERGENCY AREA	NOV 2025 (DEVIATION)
☐	52.226-6	PROMOTING EXCESS FOOD DONATION TO NONPROFIT ORGANIZATIONS	NOV 2025 (DEVIATION)
☐	52.226-7	DRUG-FREE WORKPLACE	MAY 2024
☒	52.226-8	ENCOURAGING CONTRACTOR POLICIES TO BAN TEXT MESSAGING WHILE DRIVING	MAY 2024
☐	52.229-12	TAX ON CERTAIN FOREIGN PROCUREMENTS	AUG 2025 (DEVIATION)
☐	52.232-18	AVAILABILITY OF FUNDS	APR 1984
☐	52.232-29	TERMS FOR FINANCING OF COMMERCIAL PRODUCTS AND COMMERCIAL SERVICES	NOV 2021
☐	52.232-30	INSTALLMENT PAYMENTS OF COMMERCIAL PRODUCTS AND COMMERCIAL SERVICES	NOV 2021
☒	52.232-33	PAYMENT BY ELECTRONIC FUNDS TRANSFER—SYSTEM FOR AWARD MANAGEMENT	OCT 2018
☐	52.232-34	PAYMENT BY ELECTRONIC FUNDS TRANSFER—OTHER THAN SYSTEM FOR AWARD MANAGEMENT	JUL 2013
☐	52.232-36	PAYMENT BY THIRD PARTY	NOV 2025 (DEVIATION)
☒	52.232-40	PROVIDING ACCELERATED PAYMENTS TO SMALL BUSINESS SUBCONTRACTORS	MAR 2023
☐	52.232-90	FAST PAYMENT PROCEDURE	NOV 2025 (DEVIATION)
☒	52.233-3	PROTEST AFTER AWARD	NOV 2025 (DEVIATION)

☒	52.233-4	APPLICABLE LAW FOR BREACH OF CONTRACT CLAIM	NOV 2025 (DEVIATION)
☒	52.237-2	PROTECTION OF GOVERNMENT BUILDING, EQUIPMENT, AND VEGETATION	APR 1984
☐	52.237-3	CONTINUITY OF SERVICES	JAN 1991
☒	52.240-91	SECURITY PROHIBITIONS AND EXCLUSIONS	NOV 2025 (DEVIATION)
☐	52.240-91 Alt I	SECURITY PROHIBITIONS AND EXCLUSIONS, WITH ALTERNATE I	NOV 2025 (DEVIATION)
☐	52.240-92	SECURITY REQUIREMENTS	NOV 2025 (DEVIATION)
☐	52.240-92 Alt II	SECURITY REQUIREMENTS WITH ALTERNATE II	NOV 2025 (DEVIATION)
☐	52.240-93	BASIC SAFEGUARDING OF COVERED CONTRACTOR INFORMATION SYSTEMS	NOV 2025 (DEVIATION)
☐	52.242-5	PAYMENTS TO SMAL BUSINESS SUBCONTRACTORS	JAN 2017
☐	52.242-13	BANKRUPTCY	JUL 1995
☐	52.244-2	SUBCONTRACTS	JUN 2020
☒	52.244-6	SUBCONTRACTS FOR COMMERCIAL PRODUCTS AND COMMERCIAL SERVICES	NOV 2025 (DEVIATION)
☐	52.245-1	GOVERNMENT PROPERTY	SEP 2021
☐	52.245-2	GOVERNMENT PROPERTY INSTALLATION OPERATION SERVICES	APR 2012
☐	52.245-9	USE AND CHARGES	APR 2012
☐	52.247-64	PREFERENCE FOR PRIVATELY OWNED U.S.-FLAG COMMERCIAL VESSELS	NOV 2025 (DEVIATION)
☐	52.247-64 Alt I	PREFERENCE FOR PRIVATELY OWNED U.S.-FLAG COMMERCIAL VESSELS, WITH ALTERNATE I	APR 2003
☐	52.247-64 Alt II	PREFERENCE FOR PRIVATELY OWNED U.S.-FLAG COMMERCIAL VESSELS, WITH ALTERNATE II	NOV 2021

52.222-42	**STATEMENT OF EQUIVALENT RATES FOR FEDERAL HIRES**	**MAY 2014**

In compliance with the Service Contract Labor Standards statute and the regulations of the Secretary of Labor (29 CFR Part 4), this clause identifies the classes of service employees expected to be employed under the contract and states the wages and fringe benefits payable to each if they were employed by the *contracting* agency subject to the provisions of 5 U.S.C.5341 or 5 332.

THIS STATEMENT IS FOR INFORMATION ONLY: IT IS NOT A WAGE DETERMINATION		
Grade	Hourly Rate	Fringes
WG 5, Step 2	$23.85	26%

(End of Clause)

52.252-2	CLAUSES INCORPORATED BY REFERENCE	FEB 1998

This contract incorporates one or more clauses by reference, with the same force and effect as if they were given in full text. Upon request, the Contracting Officer will make their full text available. Also, the full text of a clause may be accessed electronically at this/these address(es):

Revolutionary FAR Overhaul - FAR Overhaul - FAR Part Deviation Guidance | Acquisition.GOV

Federal Acquisition Regulation - https://www.acquisition.gov/browse/index/far

Department of Health and Human Services Acquisition Regulation – https://www.acquisition.gov/hhsar

(End of clause)

52.252-6	AUTHORIZED DEVIATIONS IN CLAUSES	NOV 2020

(a)The use in this solicitation or contract of any Federal Acquisition Regulation (48 CFR Chapter 1) clause with an authorized deviation is indicated by the addition of "(DEVIATION)" after the date of the clause.

(b)The use in this solicitation or contract of any Department of Health and Human Services (48 CFR Chapter 3) clause with an authorized deviation is indicated by the addition of "(DEVIATION)" after the name of the regulation.

(End of clause)

The following Department of Health and Human Services Acquisition Regulation clauses also apply:

☐	352.203-70	ANTI-LOBBYING	DEC 2015
☐	352.208-70	PRINTING AND DUPLICATION	DEC 2015
☐	352.211-3	PAPERWORK REDUCTION ACT	DEC 2015
☐	352.219-71	MENTOR-PROTÉGÉ PROGRAM REPORTING REQUIREMENTS	JAN 2010
☒	352.223-70	SAFETY AND HEALTH	DEC 2015
☐	352.224-70	PRIVACY ACT	DEC 2015
☒	352.226-6	INDIAN ECONOMIC ENTERPRISE SUBCONTRACTING LIMITATIONS	MAR 2022
☐	352.227-70	PUBLICATIONS AND PUBLICITY	DEC 2015
☐	352.231-70	SALARY RATE LIMITATION	DEC 2015
☐	352.237-70	PRO-CHILDREN ACT	DEC 2015
☐	352.237-71	CRIME CONTROL ACT – REPORTING OF CHILD ABUSE	DEC 2015
☐	352.237-72	CRIME CONTROL ACT – REQUIREMENTS FOR BACKGROUND CHECKS	DEC 2015
☐	352.237-73	INDIAN CHILD PROTECTION AND FAMILY VIOLENCE ACT	DEC 2015

352.232-71	ELECTRONIC SUBMISSION OF PAYMENT REQUESTS	APR 2026 (DEVIATION)

(a) *Definitions*. As used in this clause –

Payment request means a bill, voucher, invoice, or request for contract financing payment with associated supporting documentation. The payment request must comply with the requirements in FAR 32.905(b) and the applicable payment clause included in this contract.

(b) *Submission instructions.* Except as provided in paragraph (c) of this clause, the Contractor must submit payment requests electronically using the Department of Treasury Invoice Processing Platform (IPP) or successor system. Information regarding IPP, including IPP Customer Support contact information, is available at www.ipp.gov or any successor site.

(c) *Alternate submission procedures.* The Contractor may submit payment requests using other than IPP only when the Contracting Officer authorizes alternate procedures in writing.

(d) *Submission of alternate payment procedures authorization.* If alternate payment procedures are authorized, the Contractor shall include a copy of the Contracting Officer's written authorization with each payment request.

(End of clause)

The following local Indian Health Service, Navajo Area terms also apply:

NAIHS-ACQ-07	PRE-CONSTRUCTION RISK ASSESSMENT	AUG 2021

The Indian Health Manual, Part 1, Chapter 9 Occupational Safety and Health (OSH) Program (The Manual) serves as a general outline for carrying out the OSH program. The provisions set forth in The Manual meets or exceeds the minimum requirements as set forth in Title 29 Code of Federal Regulations, Part 1960, entitled "Basic Program Elements for Federal Employee OSH Programs and Related Matters," Section 19 of the Occupational Safety and Health Act; and Executive Order 12196, dated February 26, 1980. While not specifically mentioned in the OSH related regulations, executive orders, program guidance, etc., it is in the Agency and in the public interest to afford the same conditions to visitors, patients, contractors, and others present in Indian Health Service facilities.

As part of the implementation of The Manual, the *Kayenta Health Center* uses a guide and checklist known as the Pre-Construction Risk Assessment or PCRA. The PCRA – included in all solicitations and awards for construction and construction-related work on the premises – is completed by the government's requiring activity, as coordinated with and approved by the facility's Safety Program Office before any work on premises can proceed.

The following government personnel is responsible for the initiation and completion of the PCRA:

Name: *Desmond Jones*

Department: *Facility Maintenance Department, Kayenta Health Center*

(End of Clause)

NAIHS-ACQ-08	CONTRACTING OFFICER'S REPRESENTATIVE	NOV 2025

(a) *Definition.* "Contracting Officer's Representative (COR)" means an individual, including a contracting officer's technical representative (COTR), designated and authorized in writing by the contracting officer to perform specific technical or administrative functions.

(b) Per FAR Subpart 1.404(a): The Contracting Officer (CO) determines that this contract requires a Contracting Officer Representative (COR).The Contracting Officer Representative (COR) is:

Kendall Tanner – COR I

(c) Upon award, the COR will receive a copy of the written designation, specifying the extent of the COR's authority on behalf of the CO.

(d) *Limitations.*

(1) The COR has no authority to make any commitments or changes that affect price, quality, quantity, delivery, or other terms and conditions of the contract.

(2) The COR must not direct the contractor or its subcontractors to operate in conflict with the contract terms and conditions.

(End of Clause)

NAIHS-ACQ-09	UNAUTHORIZED COMMITMENTS	NOV 2025

(a) Definitions.

Contracting Officer means a person with the authority to enter into, administer, and/or terminate contracts and make related determination and findings.

Ratification means the act of approving an unauthorized commitment by an official who has the authority to do so.

Unauthorized Commitment (UAC) means an agreement that is not binding solely because the Government representative who made it lacked the authority to enter into that agreement on behalf of the Government.

(b) Policy.

The Government is not bound by agreements with, or contractual commitments made to, prospective contractors by individuals who do not have delegated contracting authority. Unauthorized commitments do not follow the appropriate process for the expenditure of Government funds. Consequently, the Government may not be able to ratify certain actions, putting a contractor at risk for taking direction from a Federal official other than the contracting officer (see FAR 1.403-2). Government employees responsible for unauthorized commitments are subject to disciplinary action. Contractors perform at their own risk when accepting direction from unauthorized officials. Failure to follow statutory and regulatory processes for the expenditure of Government funds is a very serious matter.

(c) Procedure.

Any agreement, modification, or change to a contractual agreement made by a government personnel who lack authority will be deemed an unauthorized commitment. The Government is not liable to the

Contractor or under the terms of the contract, financially or otherwise – unless the unauthorized commitment successfully passes the ratification process.

The ratification process does not have any lead time, nor does the Government make any promise that an unauthorized commitment will be ratified and, therefore, the Contractor would be paid. The Contractor proceeds at its own risk if any of the terms of the contract are altered, changed, or modified without the written concurrence by a Contracting Officer.

(End of Clause)

NAIHS-ACQ-20	PROTECTING FEDERAL EMPLOYEES AND THE PUBLIC FROM EXPOSURE TO TOBACCO SMOKE IN THE FEDERAL WORKPLACE	APR 2026

In accordance with Executive Order 13058 "Protecting Federal Employees and the Public from Exposure to Tobacco Smoke in the Federal Workplace," and the Assistant Secretary for Health memorandum "Prohibition of Tobacco Use in HHS Occupied Facilities," the use of tobacco products, in any form, is strictly prohibited at IHS-operated properties including, but not limited to:

1. All interior and exterior spaces of IHS-operated properties.
2. All HIS-operated spaces in multi-tenant buildings.
3. All Government vehicles regardless of their location.
4. Private vehicles while on IHS property.

The IHS continues to recognize the value and efficacy of patients' traditional beliefs and ceremonial practices. The use of tobacco products for ceremonial purposes is allowed in the designated traditional healing room, including any space designated for a ceremony, or in a patient's hospital room.

To the maximum extent practicable, Contractor must notify the Contracting Officer's Representative in advance of using tobacco products in a ceremony.

(End of Clause)

SECTION D – DOCUMENTS, EXHIBITS, ATTACHMENTS, ETC.

Attachment A – Statement of Work

Attachment B – Department of Labor Wage Determinations

Attachment C – Indian Health Service Buy Indian Act Indian Economic Enterprise Representation Form

Attachment D – Pre-Construction Risk Assessment

STATEMENT OF WORK

MAIN DISTRIBUTION FRAME (MDF) SERVER ROOM COOLING SYSTEM REPLACEMENT

KAYENTA HEALTH CARE CENTER
KAYENTA, ARIZONA

DATE:
May 11, 2026

INTRODUCTION

Kayenta Health Center (KHC) operates a critical Main Distribution Frame (MDF) server room that supports network, telecommunications, and medical data systems essential to healthcare operations. The existing precision cooling system has reached the end of its service life and no longer meets capacity requirements due to planned IT and server expansions. This project provides for a complete replacement and upgrade of the precision cooling systems to ensure reliable, year-round temperature and humidity control in compliance with federal, ASHRAE, and KHC facility standards.

BACKGROUND

The MDF room currently utilizes dual precision cooling systems operating simultaneously to maintain a setpoint temperature of 20°C (68°F). The existing systems have reached the end of their service life and no longer meet capacity requirements due to planned IT and server expansions. Additionally, rooftop condensing units experience low-head pressure issues during cold weather, reducing system performance. These conditions necessitate replacement with modern precision cooling systems designed for low-ambient operation and redundant configuration.

OBJECTIVE

Replace the existing cooling systems with two (2) new approximately six-ton precision cooling systems configured for N+1 redundancy. The systems shall include integrated humidity control, energy-efficient operation, and low-ambient capability rated for operation down to -20°F (-29°C).

PERFORMANCE DESCRIPTION

The Contractor shall furnish all labor, materials, tools, equipment, supervision, and transportation to remove the existing systems and install new precision cooling equipment. All work shall be performed in accordance with ASHRAE TC 9.9, ASHRAE 90.1, DOE 10 CFR 431, GSA P-100, EPA Section 608, and NEC (NFPA 70). Work shall be coordinated with Facility Maintenance to minimize disruption.

SCOPE OF WORK

1. Recover refrigerant and remove existing indoor and outdoor units per EPA Section 608.
2. Furnish and install two (2) precision cooling systems (approximately six-ton capacity each) configured for N+1 redundancy.
3. Provide outdoor condensing units rated for low-ambient operation (-20°F minimum) with variable-speed condenser fans.
4. Install indoor ceiling-mounted air handlers with integrated humidifiers and condensate drains.
5. Replace refrigerant piping, insulation, and supports; pressure test and evacuate per manufacturer requirements.
6. Verify and replace electrical disconnects, wiring, and breakers to meet NEC.
7. Provide an integrated control system capable of monitoring, sequencing, and coordinating redundant operation, including temperature and humidity control, alarm notification, and remote monitoring capability compatible with existing facility systems.
8. Conduct full startup, testing, and commissioning with qualified technicians trained and

experienced in precision cooling systems.
9. Provide as-built drawings, O&M manuals, and training upon project completion.
10. All equipment provided shall meet or exceed the minimum specifications outlined in Attachment A.

COLD WEATHER PERFORMANCE REQUIREMENTS

The system shall include features for reliable operation during low-ambient conditions:
- Low-ambient control package with stable operation to -20°F (-29°C).
- Variable-speed fans or fan cycling for head pressure control.
- Flooded condenser or equivalent head pressure management.
- Crankcase heaters and coil guards for rooftop applications.
- Field verification of head pressure stabilization during cold-weather commissioning.

HUMIDITY CONTROL AND DEHUMIDIFICATION

The precision cooling systems shall include integrated humidity control capable of both humidification and dehumidification to maintain 40–60% RH. Dehumidification shall occur via the cooling coil and reheat process, while humidification shall be achieved through electrode steam or infrared systems. Control shall be automatic via the system's integrated control interface to maintain 20°C ± 2°C and 45% ± 5% relative humidity year-round.

COMPLIANCE REQUIREMENTS

- ASHRAE TC 9.9 – Thermal Guidelines for Data Processing Environments
- ASHRAE 90.1 and 62.1 – Energy and Ventilation Standards
- DOE 10 CFR 431 – Federal Energy Efficiency Standards
- GSA P-100 – Facilities Standards for Public Buildings
- Joint Commission EC.02.01.01, EC.02.05.01, and EC.02.05.07
- NEC (NFPA 70), EPA Section 608, and OSHA 29 CFR 1910

CONTRACTOR QUALIFICATIONS

All work shall be performed by licensed HVAC and electrical contractors with a minimum of three (3) comparable projects within the last five (5) years. All technicians shall hold valid EPA Section 608 certification for refrigerant handling. Contractors shall demonstrate experience with installation and commissioning of precision cooling systems in healthcare or critical environment facilities.

REPORTING AND DOCUMENTATION

Contractor shall provide submittals for review and approval, daily construction logs, a safety plan, as-built drawings, and final testing reports.

TESTING AND COMMISSIONING

Final commissioning shall confirm temperature, humidity, and redundancy performance under supervision of the Facility Representative. The contractor shall submit signed verification reports prior to acceptance.

QUALITY CONTROL AND SAFETY

The Contractor shall follow KHC safety and infection control protocols, maintain a site-specific quality plan, and ensure all personnel carry visible identification and PPE. Work shall be coordinated to minimize patient and staff disruption.

ENVIRONMENTAL AND SITE RESTORATION

All disturbed areas, including roof penetrations, shall be restored to equal or better conditions. Any roofing cuts or penetrations for piping or conduit shall be properly sealed and flashed per manufacturer specifications. All debris shall be removed daily.

GENERAL REQUIREMENTS

Work hours: 8:00 AM – 5:00 PM, Monday through Friday, excluding Federal Holidays. Alternate hours require Facility Representative approval. All areas shall be kept clean and restored after work completion.

PROJECT CLOSEOUT

Provide training for maintenance staff, warranty documentation, performance data, and commissioning results upon completion.

CONTACT INFORMATION

Desmond Jones – Supervisory General Engineer – (928) 697-5192
Vernon Begay – Maintenance Mechanic Supervisor – (928) 697-5194
Kendall Tanner – Maintenance Mechanic Supervisor – (928) 697-5193

WARRANTY

Workmanship Warranty: One (1) year minimum.
Equipment Warranty: One (1) year minimum, five (5) years compressor warranty. Contractor shall guarantee full operational functionality and compliance upon final acceptance.

PRECISION COOLING SYSTEM - MINIMUM SPECIFICATIONS

1. General Requirements

- Type: Precision environmental control system (computer room/data room application)
- Configuration: Dual units in N+1 redundancy
- Capacity: ~6 tons (±10%) per unit
- Operation: 24/7 continuous duty

2. Environmental Control

- Temperature control: Maintain 20°C ± 2°C
- Humidity control: Maintain 45% ± 5% RH
- Humidification: Integrated (steam electrode or infrared)
- Dehumidification: Cooling coil with reheat

3. Air Distribution

- Airflow configuration: Ceiling-mounted or ducted system
- Air delivery: Uniform distribution across space
- Filtration: Minimum MERV 8 (or higher per ASHRAE recommendations)

4. Condensing System

- Type: Air-cooled condensing unit
- Low ambient operation: Minimum -20°F (-29°C)
- Head pressure control: Variable-speed fan or equivalent
- Refrigerant: Industry standard (EPA compliant)

5. Controls

- Microprocessor-based control system
- Redundancy sequencing (lead/lag)
- Alarm monitoring (high temp, humidity, failure)
- Interface capability with facility monitoring systems (BAS or equivalent)

6. Electrical

- Voltage: Match existing service (verify in field)
- Disconnects: NEC complaint
- Wiring: Installed per NEC (NFPA 70)

7. Installation Requirements

- Replace all refrigerant piping, insulation, and supports
- Provide pressure testing and evacuation
- Provide condensate drainage system
- Seal all roof penetrations per manufacturer standards

8. Testing & Commissioning

- Startup by qualified technician
- Verify temperature and humidity performance
- Verify redundancy operation
- Provide written commissioning report

9. Documentation

- As-built drawings
- O&M manuals
- Training for facility staff

Model No PFH037A-AH7
Serial No. Y14J014631
Volts 460
Ph 3 Hz 60 Date J-2014
Serial No.
Total System
Input Amps 8.1
Minimum Supply Circuit Ampacity 9.7
Maximum Fuse or Circuit Breaker Size 15
LR25312
Compressor 1
RLA 6.4
LRA 38
Condenser Fan
FLA 1.7
HP 1/2
Suitable for Outdoor Use
Refrigerant Ckt 1 R407C 426 Ozs Factory Charged
Liebert
Design Pressure PSIG High 315 Low 165
Made in Mexico

EQH2E# 1,3,5
EMER
Liebert

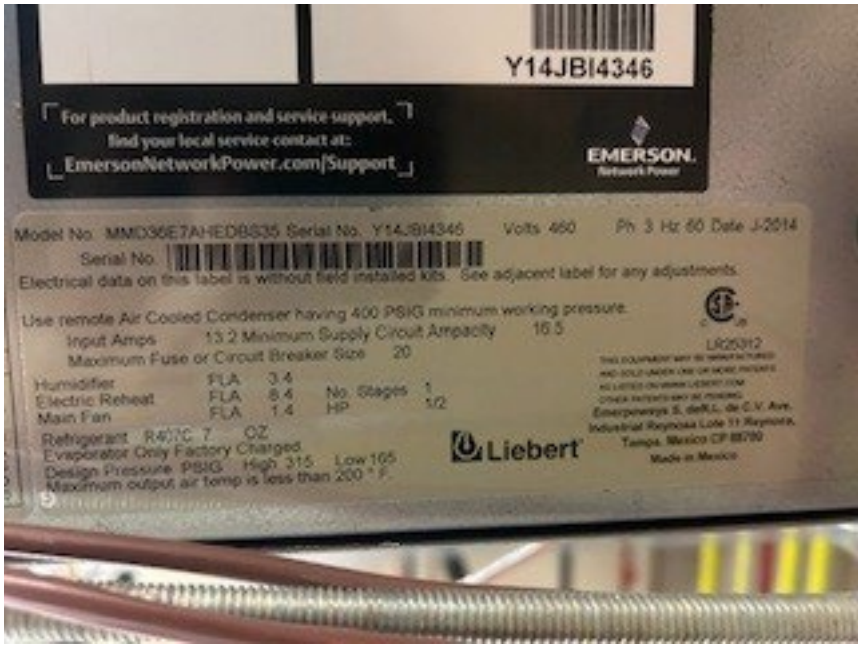
Y14JBI4346
For product registration and service support,
find your local service contact at:
EmersonNetworkPower.com/Support
EMERSON.
Network Power
Model No. MMD36E7AHEDBS35 Serial No. Y14JBI4346 Volts 460 Ph 3 Hz 60 Date J-2014
Serial No.
Electrical data on this label is without field installed kits. See adjacent label for any adjustments.
Use remote Air Cooled Condenser having 400 PSIG minimum working pressure.
Input Amps 13.2 Minimum Supply Circuit Ampacity 16.5
Maximum Fuse or Circuit Breaker Size 20
Humidifier FLA 3.4
Electric Reheat FLA 8.4 No. Stages 1
Main Fan FLA 1.4 HP 1/2
Refrigerant R407C 7 OZ
Evaporator Only Factory Charged
Design Pressure PSIG High 315 Low 165
Maximum output air temp is less than 200 ° F.
Liebert
LR25312
Made in Mexico

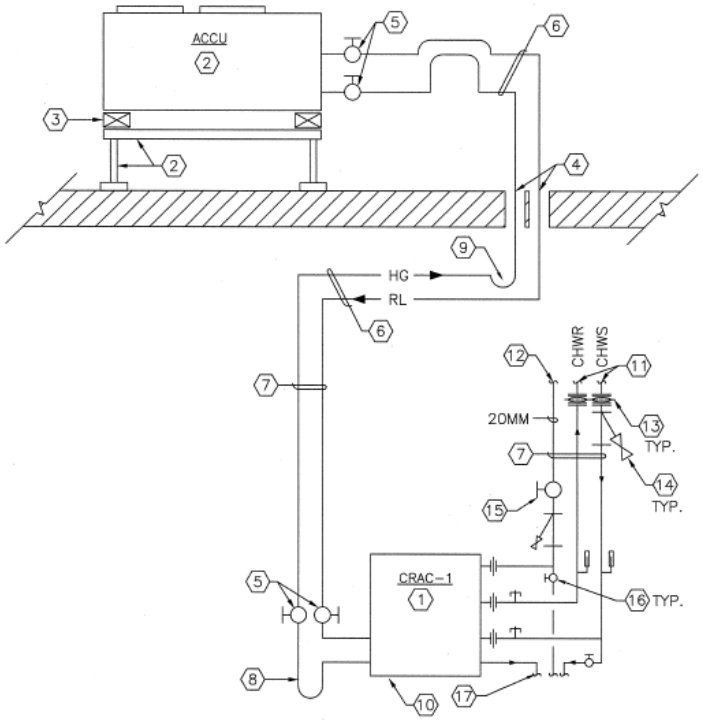

KEYED NOTES:

1 COMPUTER ROOM A/C UNIT, DUAL COOLING SYSTEM WITH CHILLED WATER FROM CENTRAL PLANT (PRIMARY) AND DX (BACKUP). SEE EQUIPMENT SCHEDULE.

2 ROOF MOUNTED AIR COOLED CONDENSER WITH 18" THYBAR TYPE SUPPORT BASE. SEE MECHANICAL EQUIPMENT SCHEDULE AND ARCHITECTURAL/STRUCTURAL FOR SUPPORT BASE AND FLASHING.

3 12MM FIBERGLASS VIBRATION ISOLATION PADS, TYP.

4 ROOF PIPING PENETRATIONS, SEE DETAIL C4 M504 M503

5 REFRIGERANT MANUAL SHUTOFF VALVES PER MANUFACTURER RECOMMENDATIONS.

6 PITCH HORIZONTAL REFRIGERANT PIPING IN DIRECTION OF REFRIGERANT FLOW A MINIMUM OF 12MM IN 3M FEET.

7 ALL PIPING VALVES AND FITTINGS EXPOSED WITHIN THE ROOM BEING SERVED, INCLUDING CHILLED WATER, COLD WATER MAKEUP, REFRIGERATION LIQUID AND HOT GAS DISCHARGE, SHALL BE INSULATED AND COVERED WITH ALUMINUM JACKET. SEE SECTION 15250 FOR ADDITIONAL INSULATION REQUIREMENTS.

8 PROVIDE TRAP FOR HOT GAS DISCHARGE PIPING PER MANUFACTURER'S RECOMMENDATIONS.

9 PROVIDE INVERTED TRAPS FOR HG AND RL PIPING IN ACCORDANCE WITH MANUFACTURERS RECOMMENDATIONS. TRAP TO EXTEND ABOVE TOP OF CONDENSER COIL A MINIMUM OF 190MM.

10 PROVIDE UNIT WITH OVERFLOW SWITCH TO SHUT DOWN UNIT PRIOR TO DRAIN OVERFLOW AND SEND ALARM SIGNAL TO EMCS.

11 CHS AND CHR FROM CHILLED WATER MAINS. SEE FLOOR PLANS FOR PIPE SIZE.

12 12MM NON-POTABLE COLD WATER MAKEUP TO UNIT HUMIDIFIER, FROM RPBF PREVENTER. SEE PLUMBING DRAWINGS FOR CONTINUATION.

13 BALL VALVE.

14 STRAINER.

15 BALL VALVE.

16 20MM DRAIN VALVE WITH HOSE CONNECTION AND CAP.

17 20MM CONDENSATE DRAIN FROM UNIT TO FLOOR SINK WITH INDIRECT CONNECTION.

D5 COMPUTER ROOM A/C UNIT SCHEMATIC

SCALE = NONE

M103G
M701
M111G
M112
M504

NOTE: SEE PLANS FOR PIPE SIZE.

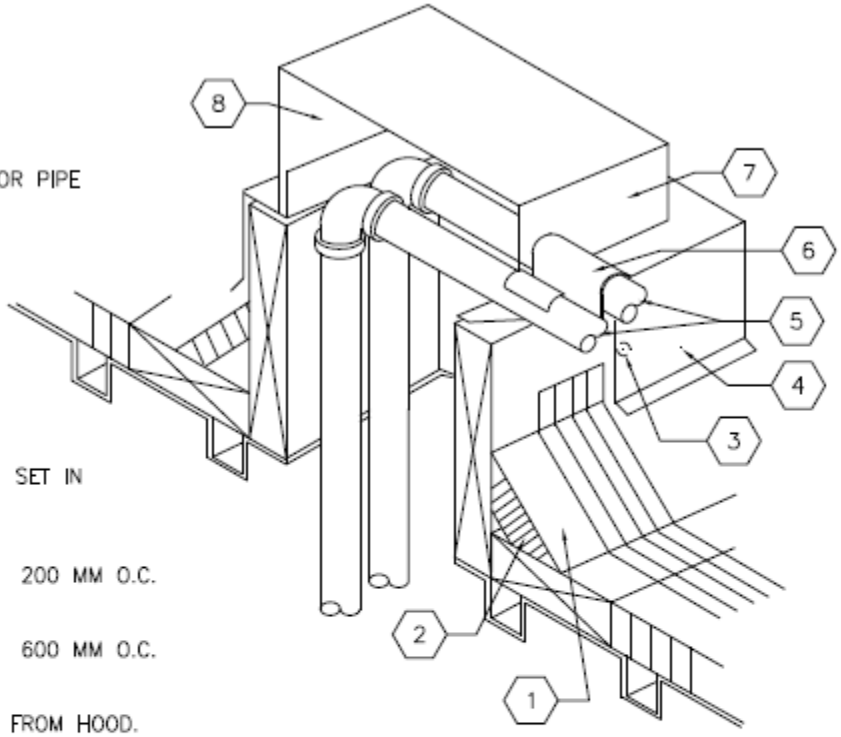

KEYED NOTES:

1 BASE FLASHING

2 FIBER CANT STRIP– SET IN BITUMEN.

3 FASTENERS APPROX. 200 MM O.C.

4 FASTENERS APPROX. 600 MM O.C.

5 SLOPE PIPES AWAY FROM HOOD.

6 SHEET METAL OR FLEX– TUBE COLLAR.

7 SHEET METAL HOOD.

8 INSULATE INSIDE OF METALWORK IN COLD CLIMATES.

C4

PIPING THRU ROOF DETAIL

SCALE = NONE

Attachment B – Department of Labor Wage Determinations

"

REGISTER OF WAGE DETERMINATIONS UNDER THE SERVICE CONTRACT ACT
By direction of the Secretary of Labor

U.S. DEPARTMENT OF LABOR
EMPLOYMENT STANDARDS ADMINISTRATION
WAGE AND HOUR DIVISION
WASHINGTON D.C. 20210

Daniel W. Simms
Director

Division of Wage Determinations

Wage Determination No.: 2015-5477
Revision No.: 30
Date Of Last Revision: 5/13/2026

State: Arizona

Area: Arizona Counties of Apache, Gila and Navajo

Fringe Benefits Required Follow the Occupational Listing

OCCUPATION CODE - TITLE	FOOTNOTE	RATE
01000 - Administrative Support And Clerical Occupations		
01011 - Accounting Clerk I		17.10
01012 - Accounting Clerk II		19.19
01013 - Accounting Clerk III		21.47
01020 - Administrative Assistant		27.90
01035 - Court Reporter		20.65
01041 - Customer Service Representative I		15.56
01042 - Customer Service Representative II		16.98
01043 - Customer Service Representative III		19.05
01051 - Data Entry Operator I		15.95
01052 - Data Entry Operator II		17.40
01060 - Dispatcher, Motor Vehicle		22.58
01070 - Document Preparation Clerk		16.45
01090 - Duplicating Machine Operator		16.45
01111 - General Clerk I		17.01
01112 - General Clerk II		18.56
01113 - General Clerk III		20.82
01120 - Housing Referral Assistant		23.03
01141 - Messenger Courier		13.56
01191 - Order Clerk I		15.08
01192 - Order Clerk II		16.45
01261 - Personnel Assistant (Employment) I		19.77
01262 - Personnel Assistant (Employment) II		22.11
01263 - Personnel Assistant (Employment) III		24.64
01270 - Production Control Clerk		32.41
01290 - Rental Clerk		17.57
01300 - Scheduler, Maintenance		18.46
01311 - Secretary I		18.46
01312 - Secretary II		20.65
01313 - Secretary III		23.03
01320 - Service Order Dispatcher		20.19
01410 - Supply Technician		27.90
01420 - Survey Worker		18.06
01460 - Switchboard Operator/Receptionist		17.24
01531 - Travel Clerk I		16.45
01532 - Travel Clerk II		18.28
01533 - Travel Clerk III		20.32
01611 - Word Processor I		16.45
01612 - Word Processor II		18.46
01613 - Word Processor III		20.65
05000 - Automotive Service Occupations		
05005 - Automobile Body Repairer, Fiberglass		26.38
05010 - Automotive Electrician		21.25
05040 - Automotive Glass Installer		19.91
05070 - Automotive Worker		19.91
05110 - Mobile Equipment Servicer		17.26
05130 - Motor Equipment Metal Mechanic		22.69
05160 - Motor Equipment Metal Worker		19.91
05190 - Motor Vehicle Mechanic		22.60
05220 - Motor Vehicle Mechanic Helper		15.93
05250 - Motor Vehicle Upholstery Worker		18.59
05280 - Motor Vehicle Wrecker		19.91
05310 - Painter, Automotive		22.12
05340 - Radiator Repair Specialist		19.91
05370 - Tire Repairer		17.22
05400 - Transmission Repair Specialist		22.60
07000 - Food Preparation And Service Occupations		
07010 - Baker		17.50

07041 - Cook I		18.00
07042 - Cook II		20.76
07070 - Dishwasher		14.86
07130 - Food Service Worker		16.50
07210 - Meat Cutter		18.24
07260 - Waiter/Waitress		16.66
09000 - Furniture Maintenance And Repair Occupations		
09010 - Electrostatic Spray Painter		26.36
09040 - Furniture Handler		16.69
09080 - Furniture Refinisher		26.36
09090 - Furniture Refinisher Helper		19.76
09110 - Furniture Repairer, Minor		23.06
09130 - Upholsterer		26.36
11000 - General Services And Support Occupations		
11030 - Cleaner, Vehicles		15.24
11060 - Elevator Operator		17.12
11090 - Gardener		22.08
11122 - Housekeeping Aide		17.12
11150 - Janitor		17.12
11210 - Laborer, Grounds Maintenance		17.71
11240 - Maid or Houseman		14.68
11260 - Pruner		16.64
11270 - Tractor Operator		20.38
11330 - Trail Maintenance Worker		17.71
11360 - Window Cleaner		18.22
12000 - Health Occupations		
12010 - Ambulance Driver		17.23
12011 - Breath Alcohol Technician		30.92
12012 - Certified Occupational Therapist Assistant		42.42
12015 - Certified Physical Therapist Assistant		30.40
12020 - Dental Assistant		23.31
12025 - Dental Hygienist		46.96
12030 - EKG Technician		46.84
12035 - Electroneurodiagnostic Technologist		46.84
12040 - Emergency Medical Technician		17.23
12071 - Licensed Practical Nurse I		27.64
12072 - Licensed Practical Nurse II		30.92
12073 - Licensed Practical Nurse III		34.46
12100 - Medical Assistant		21.04
12130 - Medical Laboratory Technician		28.30
12160 - Medical Record Clerk		21.77
12190 - Medical Record Technician		24.35
12195 - Medical Transcriptionist		23.51
12210 - Nuclear Medicine Technologist		67.95
12221 - Nursing Assistant I		14.37
12222 - Nursing Assistant II		16.17
12223 - Nursing Assistant III		17.65
12224 - Nursing Assistant IV		19.81
12235 - Optical Dispenser		21.34
12236 - Optical Technician		27.64
12250 - Pharmacy Technician		22.27
12280 - Phlebotomist		21.02
12305 - Radiologic Technologist		39.94
12311 - Registered Nurse I		28.31
12312 - Registered Nurse II		34.64
12313 - Registered Nurse II, Specialist		34.64
12314 - Registered Nurse III		41.90
12315 - Registered Nurse III, Anesthetist		41.90
12316 - Registered Nurse IV		50.22
12317 - Scheduler (Drug and Alcohol Testing)		38.30
12320 - Substance Abuse Treatment Counselor		30.49
13000 - Information And Arts Occupations		
13011 - Exhibits Specialist I		17.08
13012 - Exhibits Specialist II		21.08
13013 - Exhibits Specialist III		25.71
13041 - Illustrator I		18.79
13042 - Illustrator II		23.18
13043 - Illustrator III		28.27
13047 - Librarian		23.06
13050 - Library Aide/Clerk		17.15
13054 - Library Information Technology Systems Administrator		20.92
13058 - Library Technician		17.34
13061 - Media Specialist I		15.03
13062 - Media Specialist II		16.81
13063 - Media Specialist III		18.75
13071 - Photographer I		14.99
13072 - Photographer II		17.27
13073 - Photographer III		21.32
13074 - Photographer IV		26.01
13075 - Photographer V		31.55
13090 - Technical Order Library Clerk		21.46
13110 - Video Teleconference Technician		18.94
14000 - Information Technology Occupations		
14041 - Computer Operator I		22.59
14042 - Computer Operator II		25.27
14043 - Computer Operator III		28.18
14044 - Computer Operator IV		31.31
14045 - Computer Operator V		34.67
14071 - Computer Programmer I	(see 1)	23.00
14072 - Computer Programmer II	(see 1)	26.05
14073 - Computer Programmer III	(see 1)	
14074 - Computer Programmer IV	(see 1)	

14101 - Computer Systems Analyst I	(see 1)	
14102 - Computer Systems Analyst II	(see 1)	
14103 - Computer Systems Analyst III	(see 1)	
14150 - Peripheral Equipment Operator		22.59
14160 - Personal Computer Support Technician		31.31
14170 - System Support Specialist		34.67
15000 - Instructional Occupations		
15010 - Aircrew Training Devices Instructor (Non-Rated)		36.48
15020 - Aircrew Training Devices Instructor (Rated)		44.14
15030 - Air Crew Training Devices Instructor (Pilot)		52.92
15050 - Computer Based Training Specialist / Instructor		36.48
15060 - Educational Technologist		31.34
15070 - Flight Instructor (Pilot)		52.92
15080 - Graphic Artist		23.49
15085 - Maintenance Test Pilot, Fixed, Jet/Prop		52.92
15086 - Maintenance Test Pilot, Rotary Wing		52.92
15088 - Non-Maintenance Test/Co-Pilot		52.92
15090 - Technical Instructor		31.89
15095 - Technical Instructor/Course Developer		38.99
15110 - Test Proctor		25.73
15120 - Tutor		25.73
16000 - Laundry, Dry-Cleaning, Pressing And Related Occupations		
16010 - Assembler		19.67
16030 - Counter Attendant		19.67
16040 - Dry Cleaner		22.50
16070 - Finisher, Flatwork, Machine		19.67
16090 - Presser, Hand		19.67
16110 - Presser, Machine, Drycleaning		19.67
16130 - Presser, Machine, Shirts		19.67
16160 - Presser, Machine, Wearing Apparel, Laundry		19.67
16190 - Sewing Machine Operator		23.44
16220 - Tailor		24.38
16250 - Washer, Machine		20.62
19000 - Machine Tool Operation And Repair Occupations		
19010 - Machine-Tool Operator (Tool Room)		30.27
19040 - Tool And Die Maker		37.22
21000 - Materials Handling And Packing Occupations		
21020 - Forklift Operator		17.81
21030 - Material Coordinator		32.41
21040 - Material Expediter		32.41
21050 - Material Handling Laborer		17.41
21071 - Order Filler		17.73
21080 - Production Line Worker (Food Processing)		17.81
21110 - Shipping Packer		20.06
21130 - Shipping/Receiving Clerk		20.06
21140 - Store Worker I		17.28
21150 - Stock Clerk		20.94
21210 - Tools And Parts Attendant		17.81
21410 - Warehouse Specialist		17.81
23000 - Mechanics And Maintenance And Repair Occupations		
23010 - Aerospace Structural Welder		37.06
23019 - Aircraft Logs and Records Technician		28.99
23021 - Aircraft Mechanic I		35.25
23022 - Aircraft Mechanic II		37.06
23023 - Aircraft Mechanic III		38.97
23040 - Aircraft Mechanic Helper		24.85
23050 - Aircraft, Painter		33.14
23060 - Aircraft Servicer		28.99
23070 - Aircraft Survival Flight Equipment Technician		33.14
23080 - Aircraft Worker		31.06
23091 - Aircrew Life Support Equipment (ALSE) Mechanic I		31.06
23092 - Aircrew Life Support Equipment (ALSE) Mechanic II		35.25
23110 - Appliance Mechanic		30.27
23120 - Bicycle Repairer		24.60
23125 - Cable Splicer		43.00
23130 - Carpenter, Maintenance		25.04
23140 - Carpet Layer		28.37
23160 - Electrician, Maintenance		39.42
23181 - Electronics Technician Maintenance I		28.37
23182 - Electronics Technician Maintenance II		30.27
23183 - Electronics Technician Maintenance III		32.20
23260 - Fabric Worker		26.48
23290 - Fire Alarm System Mechanic		32.20
23310 - Fire Extinguisher Repairer		24.60
23311 - Fuel Distribution System Mechanic		32.20
23312 - Fuel Distribution System Operator		24.60
23370 - General Maintenance Worker		20.81
23380 - Ground Support Equipment Mechanic		35.25
23381 - Ground Support Equipment Servicer		28.99
23382 - Ground Support Equipment Worker		31.06
23391 - Gunsmith I		24.60
23392 - Gunsmith II		28.37
23393 - Gunsmith III		32.20
23410 - Heating, Ventilation And Air-Conditioning Mechanic		23.85
23411 - Heating, Ventilation And Air Contidioning Mechanic (Research Facility)		25.08

23430 - Heavy Equipment Mechanic		35.38
23440 - Heavy Equipment Operator		28.24
23460 - Instrument Mechanic		32.20
23465 - Laboratory/Shelter Mechanic		30.27
23470 - Laborer		17.41
23510 - Locksmith		30.27
23530 - Machinery Maintenance Mechanic		34.50
23550 - Machinist, Maintenance		27.91
23580 - Maintenance Trades Helper		21.35
23591 - Metrology Technician I		32.20
23592 - Metrology Technician II		33.85
23593 - Metrology Technician III		35.60
23640 - Millwright		32.20
23710 - Office Appliance Repairer		30.27
23760 - Painter, Maintenance		21.08
23790 - Pipefitter, Maintenance		24.65
23810 - Plumber, Maintenance		23.17
23820 - Pneudraulic Systems Mechanic		32.20
23850 - Rigger		32.20
23870 - Scale Mechanic		28.37
23890 - Sheet-Metal Worker, Maintenance		31.89
23910 - Small Engine Mechanic		28.37
23931 - Telecommunications Mechanic I		35.32
23932 - Telecommunications Mechanic II		37.13
23950 - Telephone Lineman		30.05
23960 - Welder, Combination, Maintenance		29.48
23965 - Well Driller		29.71
23970 - Woodcraft Worker		32.20
23980 - Woodworker		24.60
24000 - Personal Needs Occupations		
24550 - Case Manager		18.91
24570 - Child Care Attendant		16.65
24580 - Child Care Center Clerk		20.76
24610 - Chore Aide		14.67
24620 - Family Readiness And Support Services Coordinator		18.91
24630 - Homemaker		18.91
25000 - Plant And System Operations Occupations		
25010 - Boiler Tender		27.29
25040 - Sewage Plant Operator		22.80
25070 - Stationary Engineer		27.29
25190 - Ventilation Equipment Tender		19.23
25210 - Water Treatment Plant Operator		22.80
27000 - Protective Service Occupations		
27004 - Alarm Monitor		23.07
27007 - Baggage Inspector		18.50
27008 - Corrections Officer		24.70
27010 - Court Security Officer		23.91
27030 - Detection Dog Handler		20.69
27040 - Detention Officer		24.70
27070 - Firefighter		22.38
27101 - Guard I		18.50
27102 - Guard II		20.69
27131 - Police Officer I		28.76
27132 - Police Officer II		31.96
28000 - Recreation Occupations		
28041 - Carnival Equipment Operator		18.92
28042 - Carnival Equipment Repairer		20.50
28043 - Carnival Worker		15.46
28210 - Gate Attendant/Gate Tender		20.36
28310 - Lifeguard		15.98
28350 - Park Attendant (Aide)		22.78
28510 - Recreation Aide/Health Facility Attendant		16.63
28515 - Recreation Specialist		28.23
28630 - Sports Official		18.15
28690 - Swimming Pool Operator		23.65
29000 - Stevedoring/Longshoremen Occupational Services		
29010 - Blocker And Bracer		33.30
29020 - Hatch Tender		33.30
29030 - Line Handler		33.30
29041 - Stevedore I		31.08
29042 - Stevedore II		35.53
30000 - Technical Occupations		
30010 - Air Traffic Control Specialist, Center (HFO)	(see 2)	48.20
30011 - Air Traffic Control Specialist, Station (HFO)	(see 2)	33.23
30012 - Air Traffic Control Specialist, Terminal (HFO)	(see 2)	36.59
30021 - Archeological Technician I		22.24
30022 - Archeological Technician II		24.88
30023 - Archeological Technician III		30.83
30030 - Cartographic Technician		30.83
30040 - Civil Engineering Technician		31.33
30051 - Cryogenic Technician I		34.14
30052 - Cryogenic Technician II		37.72
30061 - Drafter/CAD Operator I		22.24
30062 - Drafter/CAD Operator II		24.88
30063 - Drafter/CAD Operator III		27.75
30064 - Drafter/CAD Operator IV		34.14
30081 - Engineering Technician I		19.82
30082 - Engineering Technician II		22.24

30083 - Engineering Technician III		24.88
30084 - Engineering Technician IV		30.83
30085 - Engineering Technician V		37.72
30086 - Engineering Technician VI		45.63
30090 - Environmental Technician		30.83
30095 - Evidence Control Specialist		30.83
30210 - Laboratory Technician		31.93
30221 - Latent Fingerprint Technician I		27.55
30222 - Latent Fingerprint Technician II		30.42
30240 - Mathematical Technician		30.83
30361 - Paralegal/Legal Assistant I		21.60
30362 - Paralegal/Legal Assistant II		26.76
30363 - Paralegal/Legal Assistant III		32.74
30364 - Paralegal/Legal Assistant IV		39.60
30375 - Petroleum Supply Specialist		37.72
30390 - Photo-Optics Technician		30.83
30395 - Radiation Control Technician		37.72
30461 - Technical Writer I		30.83
30462 - Technical Writer II		37.72
30463 - Technical Writer III		45.63
30491 - Unexploded Ordnance (UXO) Technician I		30.63
30492 - Unexploded Ordnance (UXO) Technician II		37.06
30493 - Unexploded Ordnance (UXO) Technician III		44.42
30494 - Unexploded (UXO) Safety Escort		30.63
30495 - Unexploded (UXO) Sweep Personnel		30.63
30501 - Weather Forecaster I		34.14
30502 - Weather Forecaster II		41.54
30620 - Weather Observer, Combined Upper Air Or Surface Programs	(see 2)	27.75
30621 - Weather Observer, Senior	(see 2)	30.83
31000 - Transportation/Mobile Equipment Operation Occupations		
31010 - Airplane Pilot		37.06
31020 - Bus Aide		11.97
31030 - Bus Driver		19.47
31043 - Driver Courier		19.21
31260 - Parking and Lot Attendant		15.44
31290 - Shuttle Bus Driver		18.39
31310 - Taxi Driver		14.36
31361 - Truckdriver, Light		20.82
31362 - Truckdriver, Medium		22.42
31363 - Truckdriver, Heavy		23.77
31364 - Truckdriver, Tractor-Trailer		23.77
99000 - Miscellaneous Occupations		
99020 - Cabin Safety Specialist		18.07
99030 - Cashier		14.99
99050 - Desk Clerk		14.75
99095 - Embalmer		30.63
99130 - Flight Follower		30.63
99251 - Laboratory Animal Caretaker I		19.21
99252 - Laboratory Animal Caretaker II		21.00
99260 - Marketing Analyst		27.59
99310 - Mortician		30.63
99410 - Pest Controller		23.25
99510 - Photofinishing Worker		16.10
99710 - Recycling Laborer		20.63
99711 - Recycling Specialist		24.28
99730 - Refuse Collector		19.38
99810 - Sales Clerk		16.78
99820 - School Crossing Guard		17.62
99830 - Survey Party Chief		32.50
99831 - Surveying Aide		19.57
99832 - Surveying Technician		27.59
99840 - Vending Machine Attendant		21.43
99841 - Vending Machine Repairer		26.78
99842 - Vending Machine Repairer Helper		21.43

Note: Executive Order (EO) 13706, Establishing Paid Sick Leave for Federal Contractors, applies to all contracts subject to the Service Contract Act for which the contract is awarded (and any solicitation was issued) on or after January 1, 2017. If this contract is covered by the EO, the contractor must provide employees with 1 hour of paid sick leave for every 30 hours they work, up to 56 hours of paid sick leave each year. Employees must be permitted to use paid sick leave for their own illness, injury or other health-related needs, including preventive care; to assist a family member (or person who is like family to the employee) who is ill, injured, or has other health-related needs, including preventive care; or for reasons resulting from, or to assist a family member (or person who is like family to the employee) who is the victim of, domestic violence, sexual assault, or stalking. Additional information on contractor requirements and worker protections under the EO is available at www.dol.gov/whd/govcontracts.

Note: Executive Order 13658 generally applies to contracts subject to the Service Contract Act that were awarded on or between January 1, 2015 and January 29, 2022, and that have not been renewed or extended on or after January 30, 2022. If a contract is subject to Executive Order 13658, the contractor must pay all covered workers at least $13.65 per hour (or the applicable wage rate listed on this wage determination, if it is higher) for all hours spent performing on the cor
Additional information on contractor requirements and worker protections under Executive Order 13658 is available at www.dol.gov/whd/govcontracts.

ALL OCCUPATIONS LISTED ABOVE RECEIVE THE FOLLOWING BENEFITS:

HEALTH & WELFARE: $5.55 per hour, up to 40 hours per week, or $222.00 per week or $962.00 per month

HEALTH & WELFARE EO 13706: $5.09 per hour, up to 40 hours per week, or $203.60 per week, or $882.27 per month*

*This rate is to be used only when compensating employees for performance on an SCA-covered contract also covered by EO 13706, Establishing Paid Sick Leave for Federal Contractors. A contractor may not receive credit toward its SCA obligations for any paid sick leave provided pursuant to EO 13706.

VACATION: 2 weeks paid vacation after 1 year of service with a contractor or successor, 3 weeks after 5 years, and 4 weeks after 15 years. Length of service includes the whole span of continuous service with the present contractor or successor, wherever employed, and with the predecessor contractors in the performance of similar work at the same Federal facility. (Reg. 29 CFR 4.173)

HOLIDAYS: A minimum of eleven paid holidays per year: New Year's Day, Martin Luther King Jr.'s Birthday, Washington's Birthday, Memorial Day, Juneteenth National Independence Day, Independence Day, Labor Day, Columbus Day, Veterans' Day, Thanksgiving Day, and Christmas Day. (A contractor may substitute for any of the named holidays another day off with pay in accordance with a plan communicated to the employees involved.) (See 29 CFR 4.174)

THE OCCUPATIONS WHICH HAVE NUMBERED FOOTNOTES IN PARENTHESES RECEIVE THE FOLLOWING:

1) COMPUTER EMPLOYEES: This wage determination does not apply to any individual employed in a bona fide executive, administrative, or professional capacity, as defined in 29 C.F.R. Part 541. (See 41 C.F.R. 6701(3)). Because most Computer Systems Analysts and Computer Programmers who are paid at least $27.63 per hour (or at least $684 per week if paid on a salary or fee basis) likely qualify as exempt computer professionals under 29 U.S.C. 213(a)(1) and 29 U.S.C. 213(a)(17), this wage determination may not include wage rates for all occupations within those job families. In such instances, a conformance will be necessary if there are nonexempt employees in these job families working on the contract.

Job titles vary widely and change quickly in the computer industry, and are not determinative of whether an employee is an exempt computer professional. To be exempt, computer employees who satisfy the compensation requirements must also have a primary duty that consists of:

(1) The application of systems analysis techniques and procedures, including consulting with users, to determine hardware, software or system functional specifications;

(2) The design, development, documentation, analysis, creation, testing or modification of computer systems or programs, including prototypes, based on and related to user or system design specifications;

(3) The design, documentation, testing, creation or modification of computer programs related to machine operating systems; or

(4) A combination of the aforementioned duties, the performance of which requires the same level of skills. (29 C.F.R. 541.400).

Any computer employee who meets the applicable compensation requirements and the above duties test qualifies as an exempt computer professional under both section 13(a)(1) and section 13(a)(17) of the Fair Labor Standards Act. (Field Assistance Bulletin No. 2006-3 (Dec. 14, 2006)). Accordingly, this wage determination will not apply to any exempt computer employee regardless of which of these two exemptions is utilized.

2) AIR TRAFFIC CONTROLLERS AND WEATHER OBSERVERS - NIGHT PAY & SUNDAY PAY: If you work at night as part of a regular tour of duty, you will earn a night differential and receive an additional 10% of basic pay for any hours worked between 6pm and 6am. If you are a full-time employed (40 hours a week) and Sunday is part of your regularly scheduled workweek, you are paid at your rate of basic pay plus a Sunday premium of 25% of your basic rate for each hour of Sunday work which is not overtime (i.e. occasional work on Sunday outside the normal tour of duty is considered overtime work).

** HAZARDOUS PAY DIFFERENTIAL **

An 8 percent differential is applicable to employees employed in a position that represents a high degree of hazard when working with or in close proximity to ordnance, explosives, and incendiary materials. This includes work such as screening, blending, dying, mixing, and pressing of sensitive ordnance, explosives, and pyrotechnic compositions such as lead azide, black powder and photoflash powder. All dry-house activities involving propellants or explosives. Demilitarization, modification, renovation, demolition, and maintenance operations on sensitive ordnance, explosives and incendiary materials. All operations involving re-grading and cleaning of artillery ranges.

A 4 percent differential is applicable to employees employed in a position that represents a low degree of hazard when working with, or in close proximity to ordnance, (or employees possibly adjacent to) explosives and incendiary materials which involves potential injury such as laceration of hands, face, or arms of the employee engaged in the operation, irritation of the skin, minor burns and the like; minimal damage to immediate or adjacent work area or equipment being used. All operations involving, unloading, storage, and hauling of ordnance, explosive, and incendiary ordnance material other than small arms ammunition. These differentials are only applicable to work that has been specifically designated by the agency for ordnance, explosives, and incendiary material differential pay.

** UNIFORM ALLOWANCE **

If employees are required to wear uniforms in the performance of this contract (either by the terms of the Government contract, by the employer, by the state or local law, etc.), the cost of furnishing such uniforms and maintaining (by laundering or dry cleaning) such uniforms is an expense that may not be borne by an employee where such cost reduces the hourly rate below that required by the wage

determination. The Department of Labor will accept payment in accordance with the following standards as compliance:

The contractor or subcontractor is required to furnish all employees with an adequate number of uniforms without cost or to reimburse employees for the actual cost of the uniforms. In addition, where uniform cleaning and maintenance is made the responsibility of the employee, all contractors and subcontractors subject to this wage determination shall (in the absence of a bona fide collective bargaining agreement providing for a different amount, or the furnishing of contrary affirmative proof as to the actual cost), reimburse all employees for such cleaning and maintenance at a rate of $3.35 per week (or $.67 cents per day). However, in those instances where the uniforms furnished are made of """"wash and wear"""" materials, may be routinely washed and dried with other personal garments, and do not require any special treatment such as dry cleaning, daily washing, or commercial laundering in order to meet the cleanliness or appearance standards set by the terms of the Government contract, by the contractor, by law, or by the nature of the work, there is no requirement that employees be reimbursed for uniform maintenance costs.

** SERVICE CONTRACT ACT DIRECTORY OF OCCUPATIONS **

The duties of employees under job titles listed are those described in the """"Service Contract Act Directory of Occupations"""", Fifth Edition (Revision 1), dated September 2015, unless otherwise indicated.

** REQUEST FOR AUTHORIZATION OF ADDITIONAL CLASSIFICATION AND WAGE RATE, Standard Form 1444 (SF-1444) **

Conformance Process:

The contracting officer shall require that any class of service employee which is not listed herein and which is to be employed under the contract (i.e., the work to be performed is not performed by any classification listed in the wage determination), be classified by the contractor so as to provide a reasonable relationship (i.e., appropriate level of skill comparison) between such unlisted classifications and the classifications listed in the wage determination (See 29 CFR 4.6(b)(2)(i)). Such conforming procedures shall be initiated by the contractor prior to the performance of contract work by such unlisted class(es) of employees (See 29 CFR 4.6(b)(2)(ii)). The Wage and Hour Division shall make a final determination of conformed classification, wage rate, and/or fringe benefits which shall be paid to all employees performing in the classification from the first day of work on which contract work is performed by them in the classification. Failure to pay such unlisted employees the compensation agreed upon by the interested parties and/or fully determined by the Wage and Hour Division retroactive to the date such class of employees commenced contract work shall be a violation of the Act and this contract. (See 29 CFR 4.6(b)(2)(v)). When multiple wage determinations are included in a contract, a separate SF-1444 should be prepared for each wage determination to which a class(es) is to be conformed.

The process for preparing a conformance request is as follows:

1) When preparing the bid, the contractor identifies the need for a conformed occupation(s) and computes a proposed rate(s).

2) After contract award, the contractor prepares a written report listing in order the proposed classification title(s), a Federal grade equivalency (FGE) for each proposed classification(s), job description(s), and rationale for proposed wage rate(s), including information regarding the agreement or disagreement of the authorized representative of the employees involved, or where there is no authorized representative, the employees themselves. This report should be submitted to the contracting officer no later than 30 days after such unlisted class(es) of employees performs any contract work.

3) The contracting officer reviews the proposed action and promptly submits a report of the action, together with the agency's recommendations and pertinent information including the position of the contractor and the employees, to the U.S. Department of Labor, Wage and Hour Division, for review (See 29 CFR 4.6(b)(2)(ii)).

4) Within 30 days of receipt, the Wage and Hour Division approves, modifies, or disapproves the action via transmittal to the agency contracting officer, or notifies the contracting officer that additional time will be required to process the request.

5) The contracting officer transmits the Wage and Hour Division's decision to the contractor.

6) Each affected employee shall be furnished by the contractor with a written copy of such determination or it shall be posted as a part of the wage determination (See 29 CFR 4.6(b)(2)(iii)).

Information required by the Regulations must be submitted on SF-1444 or bond paper.

When preparing a conformance request, the """"Service Contract Act Directory of Occupations"""" should be used to compare job definitions to ensure that duties requested are not performed by a classification already listed in the wage determination. Remember, it is not the job title, but the required tasks that determine whether a class is included in an established wage determination. Conformances may not be used to artificially split, combine, or subdivide classifications listed in the wage determination (See 29 CFR 4.152(c)(1))."""

DEPARTMENT OF HEALTH & HUMAN SERVICES

Indian Health Service
Office of Management Services
Division of Acquisition Policy (DAP)
5600 Fishers Lane
Rockville, MD 20857

INDIAN HEALTH SERVICE
BUY INDIAN ACT
INDIAN ECONOMIC ENTERPRISE
REPRESENTATION FORM

SOLICITATION/SOURCES SOUGHT/RFI #: _____

PROJECT TITLE: _____

DATE: _____

In accordance with 25 U.S.C. 47 the Buy Indian Act, the signature below constitutes self-certification that the Offeror meets the definition of an "Indian Economic Enterprise" (HHSAR 326.601) in response to this Sources Sought Notice, Request for Information (RFI) or Solicitation and resultant contract.

The enterprise must meet the definition of "Indian Economic Enterprise" throughout the following time periods:
(1) At the time an offer is made in response to this solicitation;
(2) At the time of contract award; and
(3) During the full term of the contract performance period. At any point during these periods, if the Contractor no longer meets the eligibility requirements, the contractor must provide immediate written notification to the Contracting Officer.

Individual Contracting Officers may require documentation of eligibility before awarding a set-aside or sole source contracts under the Buy Indian Act and awards may be subject to protest if the eligibility of the successful Offeror is in question. In addition to the self-certification requirements, successful Offerors must also be registered with the System of Award Management (SAM).

Any false or misleading information submitted by an enterprise when submitting an offer in consideration of an award set-aside under the authority of the Buy Indian Act is a violation of the law and punishable under 18 U.S.C. 1001. False claims submitted as part of contract performance are subject to the penalties enumerated in 31 U.S.C. 3729 to 3731 and 18 U.S.C. 287.

REPRESENTATION

The Offeror represents as part of its offer that it does _☐_, does not _☐_ meet the definition of an "Indian Economic Enterprise" with "Indian Ownership" under the authority of the Buy Indian Act.

_____	_____
Name of Federally Recognized Tribal Entity	**Name of the 51% owner of IEE Firm**
_____	_____
Business Name	**Certifying Signature**
_____	_____
Unique Entity ID (UEI)	**Print Name**

Pre-Construction Risk Assessment – Cover Page

Project Title:		Project/Contract #:	
GIMC Coordinator:		PCRA Submit Date:	
Project Conducted by:	❑Fac. Mgmt. ❑I.T. ❑Telecom ❑Clin. Eng. ❑Contractor: _____	Proposed Start Date:	
Staff/Cont. Name:		Est. Duration:	
Supervisor Name:		Est. Complete Date:	
Telephone:		Date Project Completed:	
Email:			
Project Description: (include specific sites and tasks)			
ICRA Classification	Class I ❑ Class II ❑ Class III* ❑ Class IV* ❑		

Section 1. Initial Project Impact Review

Topic	*Will project negatively impact or involve…?*	No	Yes	Responses (If **YES** to any)
Fire Safety *Section 2A(1)*	Ceiling tile removal (less than 4 hours total)	❑	❑	Complete Above the Ceiling Access Permit (ACAP)
	Existing fire-stop; minor barrier penetrations	❑	❑	
Fire Safety *Section 2A(2)*	Fire detection/alarm/suppression systems	❑	❑	Complete Interim Life Safety Measure (ILSM) evaluation.
	Exit paths or fire/smoke barriers	❑	❑	
	Hot work practices	❑	❑	
	Extra fire load or flammable materials	❑	❑	
Utilities *Section 2B*	Water, sewer, electricity, steam, or HVAC (including outside air intakes)	❑	❑	Complete the Utility System Risk Assessment (USRA)
	Medical gases or vacuum	❑	❑	
	Call systems, telephones, or IT systems	❑	❑	
Environmental/ Occupational *Section 2C*	Lead or asbestos containing materials	❑	❑	Complete Env./Occ. Risk Assessment (EORA)
	Chemical hazards (i.e. mercury, volatile organics)	❑	❑	
	Exposure to infectious agents or mold	❑	❑	
Security *Section 2D*	Security systems (badge readers, cameras)	❑	❑	Complete Security Risk Assessment (SRA)
	Security processes (tours, foot/vehicle traffic)	❑	❑	
Infection Control *Section 2E*	Patient care areas or critical utilities	❑	❑	Complete an Infection Control Risk Assessment (ICRA)
	Moderate to high levels of dust, noise, vibration	❑	❑	
	More than one work shift	❑	❑	

Project Approval

Evaluator Signature & Title		Date:		*Required for: All*
Facility Manager Signature		Date:		*Required for: All*
Safety Officer Signature		Date:		*Required for: All*
Infection Preventionist Signature		Date:		*Required for: USRA and ICRA*
Supervisor (affected area)		Date:		*Required for: All*

Project Close-out

Facility Manager Signature		Date:		*Required for: All*
Safety Officer Signature		Date:		*Required for: All*
Infection Preventionist Signature		Date:		*Required for: ICRA-Class III & IV*
Supervisor (affected area)		Date:		*Required for: All*

Section 2A(1). Above Ceiling Permit

Project Title:		Project/Contract #:	
Staff/Cont. Name:		Start Date:	
Supervisor Name:		Estimated Duration:	

Topic	Issue for Evaluation	No	Yes	Responses (If **NO** to any)	Date Completed
GSU Training	1. Have all supervisors/workers been trained on fire safety requirements	❑	❑	• Schedule training with Facility Mgr or Safety Ofcr • Review policy and sign acknowledgement below.	
	2. Has supervisor read above ceiling access policy?	❑	❑		
Project Plans/ Drawings	1. Has a cable routing plan been provided to Facility Manager?	❑	❑	• Provide Facility Mgr with written plan or drawing. • If req'd by Facility Mgr, request and redline Life Safety Plan drawings	
	2. Is a redlined drawing/CAD over the Life Safety Plan needed? (GIMC use only)	❑	❑		
Project Details	1. Have descriptions/fire ratings for any materials to be installed been provided?	❑	❑	• Provide complete project details to Facility Manager; or utilize facility approved systems/materials.	
	2. Have additions of cables/wires to pre-existing pathways/sleeves been reviewed and found to comply with allowable loads?	❑	❑		
	3. Have descriptions of UL compliant firestop systems been provided; or will facility approved systems be used?	❑	❑		
	4. Have descriptions of approved hanger/ support systems been provided; or will facility approved systems be used?	❑	❑		
	5. Have product details for all firestop systems/materials been provided?	❑	❑		
Pre-work inspection	1. Has a pre-work inspection been conducted?	❑	❑	• Conduct pre-work inspection and notify Facility Manager of existing deficiencies.	
	2. Have any existing unprotected penetrations been identified?	❑	❑		
	3. Have existing items supported by sprinkler piping been identified?	❑	❑		
ILSM	1. Will any ceiling/tile grid, fire/smoke barrier, or firestop system be compromised for more than 4 hours or beyond the end of the work day, without a temporary code compliant protection system/ methodology?	❑	❑	• Conduct a full ILSM evaluation	

ACA Permit Approval

Facility Manager Signature		Date:	

ACA Permit Close-out

Facility Manager Signature		Date:	

Section 2A(2). Interim Life Safety Measure Risk Assessment

Project Title:		Project/Contract #:	
Staff/Cont. Name:		Start Date:	
Supervisor Name:		Estimated Duration:	

Topic	Issue for Evaluation	No	Yes	Responses (If **YES** to any)	Date Initiated
Exits	1. Any exit access or travel distances altered/excessive?	❑	❑	• Post signage for an alternate means of egress • Train staff on alternate means of egress* • Inspect exit daily for blockage or debris • Double fire drill frequency* • Increase hazard surveys*	
	2. Any exits used by anyone other than contractors obstructed?	❑	❑		
	3. Absence of two remote exits?	❑	❑		
Emergency Access	1. Access to emergency depts. or services obstructed?	❑	❑	• Designate an alternate means of access • Notify GIMC Security • Notify Gallup Fire Dept.	
	2. Access to construction area obstructed for emergency forces?	❑	❑		
Fire Protection	1. Fire alarm/detection (>25% in one zone) impaired >4 hrs?	❑	❑	• Submit fire watch request; ○ Or, use/monthly test temp. alarm/detection/ suppression system • Notify Gallup Fire Dept. • Double fire drill frequency* • Make affected staff aware • Increase hazard surveys*	
	2. Fire suppression impaired >10 hrs?	❑	❑		
Fire & Smoke Barriers	1. Major breaches of fire/smoke barriers (including vertical)?	❑	❑	• Construct 1-hr smoke tight temp. barrier (as needed) • Inspect exits daily • Double fire drill frequency • Train staff to compensate* • Increase hazard surveys*	
	2. Unprotected corridors or Haz. Areas?	❑	❑		
	3. Fire/smoke door maintenance/latching problem not immediately repairable?	❑	❑		
Addl. Firefighting Equipment	1. Fire load significantly increased above normal for area/building?	❑	❑	• Provide additional fire extinguishers in area	
Addl. Firefighting Training	1. Additional firefighting equipment differs from normal equipment?	❑	❑	• Train equipment staff/ contractors to use	
Combustible Load Levels	1. New/increased storage of flammable/combustible materials?	❑	❑	• Minimize debris accumulation • Increase hazard surveys	
	2. Flammable/combustible debris?	❑	❑		
Hazard Surveillance	1. Addl. hazards such as excavations, etc.?	❑	❑	• Initiate additional surveillance of area	
Facility-wide Training	1. Life safety deficiencies or hazards impaired throughout entire building?	❑	❑	• Train employees on ILSM • Notify Gallup Fire Dept.	

*-Need for response may be waived upon approval of Authority Having Jurisdiction based on scope and duration of project.

Describe any other life safety impacts, as well as specific actions to be implemented, for these and those above.

Evaluator signature & Title		Date:	
Facility Manager Signature		Date:	
Safety Officer Signature		Date:	
Staff/Contractor Signature		Date:	

Section 2A(3). Hot Work Permit

Project Title:		Project/Contract #:	
Staff/Cont. Name:		Start Date:	
Supervisor Name:		Estimated Duration:	

WELDING and BURNING PERMIT
(Work is not permitted unless this card is filled in and posted in work area)

Date_____/_____/_____Time _____ _____AM/PM

Building _____

Department _____Floor _____

Work to be done

_____

_____

Special Precautions _____

Fire Watch Required?_____ Yes _____No

The location where work is to be done has been examined by me, the necessary precautions have been taken (see checklist), and permission is granted for this work.

Permit Expires _____/_____/_____ Time: _____AM/PM

Signed _____
Individual responsible for work authorization (Facility Manager)

Time Started _____ Time Completed _____

FINAL CHECK
(Where Fire Watch is required)

Work area, and all adjacent area where sparks might have spread, were continuously inspected during the entire time cutting, welding, or other hot work was conducted, and 30 minutes after completion. In addition, the work area was checked four (4) hours after the cutting, welding, or other hot work was completed, and no fire conditions were noted.

Signed

Return this permit, after work is completed, to Facilities Manager or designee for filing.

Required Precautions CHECK LIST

- ☐ Fire protection system(s) in service (sprinklers, CO_2, foam).
- ☐ Cutting and welding equipment I good condition.
- ☐ Floor/ground clean (and wet down when necessary).
- ☐ Combustibles at least 35 feet from welding area.
- ☐ Flammable liquids and other hazards removed from area.
- ☐ All floor and wall openings within 35 feet covered.
- ☐ Non-combustible covers used to protect nearby combustibles and equipment.
- ☐ Containers, tanks, ducts, and other enclosures cleaned and purged of flammable vapors, liquids, dusts, and other hazardous materials.
- ☐ Fire extinguishers or small standpipe fire hose provided.
- ☐ All hazardous operations discontinued in area.
- ☐ Fire watch should be present during, and at least on-half hour after, welding burning has ceased.
- ☐ Location of nearest fire alarm box identified.

When possible, do work in a non-combustible area.

An individual should generally be assigned to watch for dangerous Sparks in the area and the floor below.

Section 2B. Utility System Risk Assessment

Project Title:		Project/Contract #:	
Staff/Cont. Name:		Start Date:	
Supervisor Name:		Estimated Duration:	

Will project affect?	Yes	No	Minimum Recommended Precautions: (If Yes)
Noise	❑	❑	• Review project and patient care schedules to identify least impactful times, or options to curtail or relocate patient care operations • Review how workers will access worksite and isolate from patient care as feasible • Review tools and processes to be used for reasonable, quieter alternatives; • Install sound attenuating barriers where feasible. Monitor as needed.
Vibration	❑	❑	• Review work schedules for project and work area to identify least impactful times • Review tools and processes to be used for reasonable alternatives • Assess potential impacts on sensitive patient care equipment/processes; Monitor as needed.
Water	❑	❑	• Submit ICRA and Utility Shutdown Request; Submit fire watch request per ILSM evaluation • Pre-position materials needed to respond to a water leak • Review need/options to isolate adjacent areas and equipment (i.e. lab analyzers, ice machines, HVAC appurtenances, etc.) • Flush and/or treat system if potential for residue or stagnation (See Legionella Plan)
Sewer	❑	❑	• Submit ICRA and Utility Shutdown Request • Pre-position materials needed to respond to leaks or spills, and to handle contaminated construction debris. • Review need/options to isolate adjacent areas and to curtail or alter patient care routines.
Electricity	❑	❑	• Review work schedules for project and work area to identify least impactful times • Review potential impacts to connected utility systems and electronic equipment • Submit Utility Shutdown Request
Steam	❑	❑	• Submit Utility Shutdown Request • Notify steam-based equipment users of potential impacts
Natural Gas	❑	❑	• Submit Utility Shutdown Request
HVAC	❑	❑	• Submit ICRA and Utility Shutdown Request • Review work schedules for project and work area to identify least impactful times • Identify alternate environmental condition options
Medical Gas & Vacuum	❑	❑	• Submit Utility Shutdown Request • Ensure work will be done in accordance with NFPA 99 or other relevant codes • Notify patient care staff of potential impacts to prompt clinical intervention planning • Ensure that post-completion testing is completed
IT Systems	❑	❑	• Collaboratively plan project between Facility Mgmt and IT Departments • Notify patient care staff to plan for clinical process modification as needed
Telephones	❑	❑	• Collaboratively plan project between Facility Mgmt and IT Departments • Notify patient care security staff to plan for emergency response modifications
Call systems	❑	❑	• Collaboratively plan project between Facility Mgmt and IT Departments • Notify patient care staff to plan for clinical process modification as needed • Plan for alternate notification means (standalone systems, bells, etc.)
Observation Cameras	❑	❑	• Collaboratively plan project between Facility Mgmt and IT Departments • Notify patient care staff to plan for clinical process modifications as needed

Describe any specific actions to be implemented:

Evaluator Signature & Title		Date:	
Facility Manager Signature		Date:	
Safety Officer Signature		Date:	
Staff/Contractor Signature		Date:	

Section 2C. Environmental and Occupational Risk Assessment

Project Title:		Project/Contract #:	
Staff/Cont. Name:		Start Date:	
Supervisor Name:		Estimated Duration:	

Will project involve:	Yes	No	Minimum Recommended Precautions: (If Yes)
Lead-based paint	❑	❑	• Review facility lead-based paint assessment and management plan • Ensure project staff are properly trained in precautions necessary to protect facility occupants and themselves • Establish plan to implement appropriate isolation, work practices, housekeeping, and waste handling • Establish plan for required air or surface sampling
Asbestos	❑	❑	• Review facility asbestos assessment and management plan • Ensure project staff are properly trained in precautions necessary to protect facility occupants and themselves • Establish plan to implement appropriate isolation, work practices, housekeeping, and waste handling • Establish plan for required air or surface sampling
Chemical hazards	❑	❑	• Review area or initial project plan to identify hazards inherent to work area • Compile and review listing of chemicals to be used; ensure Safety Data Sheets available • Review chemicals to be used for potential impacts on areas adjacent to project • Ensure project staff have receive Haz. Communications training including emergency response processes/responsibilities • Conduct Job Hazard Assessment and ensure appropriate personal protective equipment is available and used
Infectious Agents	❑	❑	• Review area or initial project plan to identify hazards inherent to work area • Ensure staff have received Bloodborne Pathogen Training including exposure response processes/responsibilities • Review need for medical screening/vaccination with employee health program • Conduct Job Hazard Assessment and ensure appropriate personal protective equipment is available and used
Mold	❑	❑	• Review area or initial project plan to identify hazards inherent to work area • Consider potential risk of water damage due to compromising wall, ceiling, roof • Ensure project staff are properly trained in precautions necessary to protect facility occupants and themselves • Establish plan to implement appropriate isolation, work practices, housekeeping, and waste handling

Describe any specific actions to be implemented:

Evaluator Signature & Title		Date:	
Facility Manager Signature		Date:	
Employee Health Signature (as needed)		Date:	
Safety Officer Signature		Date:	
Staff/Contractor Signature		Date:	

Section 2D. Security Risk Assessment

Project Title:		Project/Contract #:	
Staff/Cont. Name:		Start Date:	
Supervisor Name:		Estimated Duration:	

Will project affect:	Yes	No	Minimum Recommended Precautions: (If Yes)
Badge Readers	❑	❑	• Collaborative plan project with IT Department • Notify Security staff of impaired system to plan for alternative access control methods • Notify affected work area staff of alternative access control methods
Security Cameras	❑	❑	• Collaboratively plan project between Facility Mgmt and IT Departments • Notify security to plan for surveillance process modifications
Physical Barriers	❑	❑	• Review need for temporary physical barriers
Security Processes	❑	❑	• Review changes to area access with security to plan for alternate rounding paths • Review pedestrian/facility occupant foot traffic patterns to identify potential vulnerabilities • Review vehicle traffic patterns with security to ensure required access and to plan for traffic management as needed
Security sensitive areas	❑	❑	• Review project staff listing with security • Notify project staff of access control requirements • Provide identification as needed.
Emergency Response Procedures	❑	❑	• Notify external first responders/partners as appropriate • Provide training to staff regarding procedural changes • Relocate equipment and/or signage as needed • Review emergency response communications procedures/plan

Describe any specific actions to be implemented:

Evaluator Signature & Title		Date:	
Facility Manager Signature		Date:	
Security Supv. Signature		Date:	
Safety Officer Signature		Date:	
Staff/Contractor Signature		Date:	

Section 2E. Infection Control Risk Assessment

Project Title:		Project/Contract #:	
Staff/Cont. Name:		Start Date:	
Supervisor Name:		Estimated Duration:	

Building:	Floor(s):	Department Name(s):	Room Number(s) & Description(s)

Project Description: (include specific sites and tasks)

Infection Control Risk Assessment
Matrix of Precautions for Construction & Renovation

Step 1: Using the following table, *identify* the Type of Construction Project Activity (Type A-D)

TYPE A	**Inspection and Non-Invasive Activities**. Includes, but is not limited to: ▪ removal of ceiling tiles for visual inspection only, e.g., limited to 1 tile per 50 square feet ▪ painting (but not sanding) ▪ wallcovering, electrical trim work, minor plumbing, and activities which do not generate dust or require cutting of walls or access to ceilings other than for visual inspection.
TYPE B	**Small scale, short duration activities which create minimal dust** Includes, but is not limited to: ▪ installation of telephone and computer cabling ▪ access to chase spaces ▪ cutting of walls or ceiling where dust migration can be controlled.
TYPE C	**Work that generates a moderate to high level of dust or requires demolition or removal of any fixed building components or assemblies** Includes, but is not limited to: ▪ sanding of walls for painting or wall covering ▪ removal of floorcoverings, ceiling tiles and casework ▪ new wall construction ▪ minor duct work or electrical work above ceilings ▪ major cabling activities ▪ any activity which cannot be completed within a single workshift.
TYPE D	**Major demolition and construction projects** Includes, but is not limited to: ▪ activities which require consecutive work shifts ▪ requires heavy demolition or removal of a complete cabling system ▪ new construction.

Step 1: _____

Step 2: Using the following table, ***identify*** **the Patient Risk Groups** that will be affected.

Low Risk	Medium Risk	Medium-High Risk	Highest Risk
▪ Office areas ▪ Nonpatient-care areas not otherwise specified (NOS)	▪ Cardiology ▪ Echocardiography ▪ Endoscopy ▪ Local Room ▪ Physical Therapy ▪ Radiology/MRI ▪ Respiratory Therapy ▪ Infusion Clinic ▪ Orthopedic Clinic	▪ Emergency Room ▪ Labor & Delivery ▪ Laboratories (specimen) ▪ Medical Units ▪ Newborn Nursery ▪ Outpatient Surgery ▪ Pediatrics ▪ Pharmacy ▪ Post Anesthesia Care Unit	▪ Any area caring for immunocompromised patients ▪ Central Sterile Supply ▪ Intensive Care Units ▪ Negative pressure isolation rooms ▪ Operating rooms including C-section rooms

If more than one risk group will be affected, select the higher risk group:

_____

Step 2: _____

Step 3: ***Match*** **the following**;

Patient Risk Group (***Low, Medium, High, Highest***) with the planned **…**
Construction Project Type (***A, B, C, D***) on the following matrix, to find the **…**
Class of Precautions (***I, II, III or IV***) or level of infection control activities required.

	Type of Construction			
Patient Risk Group	**Type A**	**Type B**	**Type C**	**Type D**
Low Risk Group	I	II	II	III/IV
Medium Risk Group	I	II	III	IV
Medium-High Risk Group	I	II	III/IV	IV
Highest Risk Group	I –III Consult ICP	III/IV	III/IV	IV

Class of IC Measures Class I ❑ Class II ❑ Class III* ❑ Class IV* ❑

* Note Infection Preventionist approval will be required when the Construction Activity and Risk Level indicate that Class III or Class IV control procedures are necessary.

Step 3: _____

Description of Required Infection Control Precautions by Class

	Before Construction	During Construction Project	Upon Completion of Project
CLASS I	1. Notify Department Supervisor	1. Execute work by methods to minimize raising dust from construction operations. 2. Immediately replace a ceiling tile displaced for visual inspection	1. Clean work area upon completion of task.
CLASS II	1. Notify Department Supervisor	1. Provide active means to prevent airborne dust from dispersing into atmosphere. 2. Water mist work surfaces to control dust while cutting. 3. Seal unused doors with duct tape. 4. Block off and seal air vents. 5. Place dust mat at entrance and exit of work area 6. Remove or isolate HVAC system in areas where work is being performed.	1. Wipe work surfaces with cleaner/disinfectant. 2. Contain construction waste before transport in tightly covered containers. 3. Wet mop and/or vacuum with HEPA filtered vacuum before leaving work area. 4. Upon completion, restore HVAC system where work was performed.
CLASS III	1. Contact Housekeeping Supervisor to schedule Post-work cleaning 2. Review ICRA with Department Supervisor(s)	1. Remove or Isolate HVAC system in area where work is being done to prevent contamination of duct system. 2. Complete all critical barriers i.e. sheetrock, plywood, plastic, to seal area from non-work area or implement control cube method (cart with plastic covering and sealed connection to work site with HEPA vacuum for vacuuming prior to exit) before construction begins. 3. Maintain negative air pressure within work site utilizing HEPA equipped air filtration units. 4. Contain construction waste before transport in tightly covered containers. 5. Cover transport receptacles or carts. Tape covering unless solid lid.	1. Do not remove barriers from work area until completed project is inspected by the owner's Safety Department and Infection Prevention & Control Department and thoroughly cleaned by the owner's Environmental Services Department. 2. Remove barrier materials carefully to minimize spreading of dirt and debris associated with construction. 3. Vacuum work area with HEPA filtered vacuums. 4. Wet mop area with cleaner/disinfectant. 5. Upon completion, restore HVAC system where work was performed.
CLASS IV	1. Contact Housekeeping Supervisor to schedule Post-work cleaning 2. Notify Tour Supervisor 3. Review ICRA with Department Supervisor(s)	1. Isolate HVAC system in area where work is being done to prevent contamination of duct system. 2. Complete all critical barriers i.e. sheetrock, plywood, plastic, to seal area from non-work area or implement control cube method (cart with plastic covering and sealed connection to work site with HEPA vacuum for vacuuming prior to exit) before construction begins. 3. Maintain negative air pressure within work site utilizing HEPA equipped air filtration units. 4. Seal holes, pipes, conduits, and punctures. 5. Construct anteroom and require all personnel to pass through this room so they can be vacuumed using a HEPA vacuum cleaner before leaving work site or they can wear cloth or paper coveralls that are removed each time they leave work site. 6. All personnel entering work site are required to wear shoe covers. Shoe covers must be changed each time the worker exits the work area.	1. Do not remove barriers from work area until completed project is inspected by the owner's Safety Department and Infection Prevention & Control Department and thoroughly cleaned by the owner's Environmental Services Dept. 2. Remove barrier material carefully to minimize spreading of dirt and debris associated with construction. 3. Contain construction waste before transport in tightly covered containers. 4. Cover transport receptacles or carts. Tape covering unless solid lid. 5. Vacuum work area with HEPA filtered vacuums. 6. Wet mop area with cleaner/disinfectant. 7. Upon completion, restore HVAC system where work was performed.

Step 4. Identify the areas surrounding the project area, assessing potential impact

Adjacent Area Impacts: Identify the areas surrounding the project area, to assess potential impact						
	Below	Above	Lateral	Lateral	Behind	in Front
Adjacent Unit Name						
Patient Risk Group (per Table 1)						

Step 5. Identify specific site of activity e.g., patient rooms, medication room, etc.
Step 6. Identify containment measures, using prior assessment. What type of barriers? (E.g., solid wall barriers); Will HEPA filtration be required. Do plans allow for adequate number of isolation/negative airflow rooms? (Note: Renovation/construction area shall be isolated from the occupied areas during construction and shall be negative with respect to surrounding areas)
Step 7. Consider potential risk of water damage. Is there a risk due to compromising structural integrity? (e.g., wall, ceiling, roof)
Step 8. Work hours: Can or will the work be done during non-patient care hours?
Step 9. Do plans allow for adequate number of isolation/negative airflow rooms?
Step 10. Do the plans allow for the required number & type of handwashing sinks?
Step 11. Does the infection prevention & control staff agree with the minimum number of sinks for this project?
Step 12. Does the infection prevention & control staff agree with the plans relative to clean and soiled utility rooms?
Step 13. Plan to discuss the following containment issues with the project team. (E.g., traffic flow, housekeeping, debris removal [how and when])
***Appendix**: Identify and communicate the responsibility for project monitoring that includes infection prevention & control concerns and risks. The ICRA will be modified throughout the project. Revisions must be communicated to the Project Manager.*

Infection Control Construction Permit

	Permit No:
Location of Construction:	Project Start Date:
Project Coordinator:	Estimated Duration:
Contractor Performing Work	Permit Expiration Date:
Supervisor:	Telephone:

YES	NO	CONSTRUCTION ACTIVITY	YES	NO	INFECTION CONTROL RISK GROUP
		TYPE A: Inspection, non-invasive activity			GROUP 1: Low Risk
		TYPE B: Small scale, short duration, moderate to high levels			GROUP 2: Medium Risk
		TYPE C: Activity generates moderate to high levels of dust, requires greater 1 work shift for completion			GROUP 3: Medium/High Risk
		TYPE D: Major duration and construction activities Requiring consecutive work shifts			GROUP 4: Highest Risk

CLASS I	1. Execute work by methods to minimize raising dust from construction operations. 2. Immediately replace any ceiling tile displaced for visual inspection.	3. Minor Demolition for Remodeling
CLASS II	1. Provides active means to prevent air-borne dust from dispersing into atmosphere 2. Water mist work surfaces to control dust while cutting. 3. Seal unused doors with duct tape. 4. Block off and seal air vents. 5. Wipe surfaces with cleaner/disinfectant.	6. Contain construction waste before transport in tightly covered containers. 7. Wet mop and/or vacuum with HEPA filtered vacuum before leaving work area. 8. Place dust mat at entrance and exit of work area. 9. Isolate HVAC system in areas where work is being performed; restore when work completed.
CLASS III **Date** **Initial**	1. Obtain infection control permit before construction begins. 2. Isolate HVAC system in area where work is being done to prevent contamination of the duct system. 3. Complete all critical barriers or implement control cube method before construction begins. 4. Maintain negative air pressure within work site utilizing HEPA equipped air filtration units. 5. Do not remove barriers from work area until complete project is checked by Infection Prevention & Control and thoroughly cleaned by Environmental Services.	6. Vacuum work with HEPA filtered vacuums. 7. Wet mop with cleaner/disinfectant 8. Remove barrier materials carefully to minimize spreading of dirt and debris associated with construction. 9. Contain construction waste before transport in tightly covered containers. 10. Cover transport receptacles or carts. Tape covering. 11. Upon completion, restore HVAC system where work was performed.
CLASS IV **Date** **Initial**	1. Obtain infection control permit before construction begins. 2. Isolate HVAC system in area where work is being done to prevent contamination of duct system. 3. Complete all critical barriers or implement control cube method before construction begins. 4. Maintain negative air pressure within work site utilizing HEPA equipped air filtration units. 5. Seal holes, pipes, conduits, and punctures appropriately. 6. Construct anteroom and require all personnel to pass through this room so they can be vacuumed using a HEPA vacuum cleaner before leaving work site or they can wear cloth or paper coveralls that are removed each time they leave the work site. 7. All personnel entering work site are required to wear shoe covers.	8. Do not remove barriers from work area until completed project is checked by Infection Prevention & Control and thoroughly cleaned by Environmental. Services. 9. Vacuum work area with HEPA filtered vacuums. 10. Wet mop with disinfectant. 11. Remove barrier materials carefully to minimize spreading of dirt and debris associated with construction. 12. Contain construction waste before transport in tightly covered containers. 13. Cover transport receptacles or carts. Tape covering. 14. Upon completion, restore HVAC system where work was performed.

Additional Requirements:

Date Initials	Exceptions/Additions to this permit Date.
Permit Request By:	Permit Authorized By:
Date:	Date:

****Post Completed & Signed ICRA at worksite.**

Section 2F: Project Revision Request

Project Title:		Project/Contract #:	
GIMC Coordinator:		Original PCRA Date:	
Project Conducted by:	❑Fac. Mgmt. ❑I.T. ❑Telecom ❑Clin. Eng. ❑Contractor: _____	Original Start Date:	
		Original Duration:	
Staff/Cont. Name:		Orig Complete Date	
Supervisor Name:		Actual Start Date:	
Telephone:		Revised Duration:	
Email:		Rev. Complete Date	

Changes to Project

Project Description: (include specific sites and tasks)	
ICRA Classification	Class I ❑ Class II ❑ Class III* ❑ Class IV* ❑

Reasons for Project Changes

Summary of Reasons:

New Areas Affected by Project:

Building:	Floor(s):	Department Name(s):	Room Number(s) & Description(s)

Changes to Initial Impact Assessment

Topic	*Will project revision affect the…?*	No	Yes	Responses (If **YES**)
Fire Safety Section 2A(1)	Above the Ceiling Access Permit (ACAP)	❑	❑	• Consult with Facility Manager
Fire Safety Section 2A(2)	Interim Life Safety Measure (ILSM) evaluation	❑	❑	• Consult with Facility Manager and Safety Officer
Utilities Section 2B	Utility Risk Assessment (URA)	❑	❑	• Consult with Facility Manager
Environmental/ Occupational Section 2C	Env./Occ. Risk Assessment (EORA)	❑	❑	• Consult with Safety Officer
Security Section 2D	Security Risk Assessment (SRA)	❑	❑	• Consult with Safety Officer
Infection Control Section 2E	Infection Control Risk Assessment (ICRA)	❑	❑	• Consult with Infection Preventionist

Project Revision Approval

Evaluator Signature & Title		Date:		*Required for: All*
Facility Manager Signature		Date:		*Required for: All*
Safety Officer Signature		Date:		*Required for: All*
Infection Prev Signature		Date:		*Required for: ICRA*

Section 3A. Fire Watch Request Form

Project Title:		Project/Contract #:	
GIMC Coordinator:		Fire Watch Start Date:	
Staff/Cont. Name:		Fire Watch Start Time:	
Supervisor Name:		Est. Complete Date:	
Telephone:		Date Project Completed:	
Email:			

Building:	Floor(s):	Department Name(s):	Room Number(s) & Description(s)

A written ILSM assessment is required on all construction projects, repairs, or other activities that will impair any part of the life safety features. Whenever the automatic fire alarm system is disabled for four (4) or more hours in a given 24-hour period, or whenever the automatic sprinkler system is disabled for ten (10) or more hours in a given 24-hour period, a Fire Watch shall be implemented in all areas affected. Project manager must send a completed copy of the ILSM assessment form along this request to the Facility Manager, Safety Officer, and Security Department Manager who will conduct the fire watch in the areas affected for the duration of impairment according to facility procedures. A fire watch log must be maintained to document each inspection.

The following elements must be included in all fire watch inspections:

1. Outside doors are closed and secured, and windows, fire doors are closed.
2. All waste, rags, paint residue, rubbish, and similar combustible items are removed from the building.
3. All remaining operable fire protection equipment is in place and not obstructed.
4. Ensure that all aisles are clear.
5. Confirm that all motors or machines not required to operate are turned off.
6. All unsecured offices and conference rooms are checked for unapproved smoking material that may have been carelessly discarded.
7. All unnecessary heat-producing devices are turned off in the impairment area
8. Ensure that flammable and combustible materials are properly stored in approved containers. (NOTE: Flammable compressed gas cylinders must be stored in a 1-hour fire resistance rated room.)
9. Ensure that sprinkler valves are in the open position. (NOTE: If sprinkler control valves are electronically supervised by the Automatic Fire Alarm System and are not impaired by this scope of work, then visual examination is not required.
10. Check for proper ventilation in the impaired area.
11. Ensure there are no leaks from the plumbing fixtures and piping

Individuals performing the Fire Watch will make clear precise entries on the Fire Watch Log, and immediately report any unsafe or unusual situations to the Safety Officer and Facility Manager, or their designees. At the conclusion of the Fire Watch, a copy of the Fire Watch Log must be forwarded to the Safety Officer and project file.

Fire Watch Approval

Requestor Signature & Title		Date:	
Facility Manager Signature		Date:	
Safety Officer Signature		Date:	
Security Supv. Signature		Date:	

Section 3B. Utility Shutdown Request

Project Title:		Project/Contract #:	
GIMC Coordinator:		Request submit date	
Staff/Cont. Name:			
Prime Contractor (if different)		Requested Shutdown Date:	
Supervisor Name:		Shutdown Time:	
Telephone:		Est. Duration:	
Email:			

NOTE: A separate utility shutdown request must be submitted for each separate work period during which the utility(ies) will be interrupted.

Utility Requested to be Shutdown	Yes	Comments
Water	❑	
Sewer	❑	
Electricity	❑	
Steam	❑	
Natural Gas	❑	
HVAC	❑	
Medical Gas & Vacuum	❑	
IT Systems	❑	
Telephones	❑	
Call systems	❑	
Observation Cameras	❑	

Evaluator Signature & Title		Date:	
Facility Manager Signature		Date:	
Utility System Manager		Date:	

Section 3C. Daily Construction Area Checklist

Project Title:		Project/Contract #:	
Staff/Cont. Name:		Start Date:	
Supervisor Name:		Estimated Duration	
Telephone:		Exp. Complete Date	

Building:	Floor(s):	Department Name(s):	Room Number(s) & Description(s)

Requirements	First Check			Second Check		
	Yes	No	N/A	Yes	No	N/A
1. Entrance Doors/ ICRA Barriers properly closed and sealed. Doors secured.	❑	❑	❑	❑	❑	❑
2. Enclosures free of penetrations						
3. Holes, pipes, conduits sealed at ICRA Barrier						
4. Air vents sealed (supply and return)						
5. HVAC system isolated						
6. Unused doors taped						
7. Windows closed						
8. HEPA filtration on and running						
9. HEPA filter log up-to-date						
10. HEPA vacuum and/or coveralls available						
11. Negative pressure monitor in place and running • Negative Pressure reading: _____						
12. Hot work permit obtained						
13. Exit signs installed and lighted						
14. Fire extinguishers in place and tag up-to-date						
15. All routes of egress clear of debris						
16. Construction signs in place						
17. Dust (sticky) mats in place and clean						
18. Routine cleaning completed						
19. Surrounding areas free of dust						
20. Debris removed daily						
21. Transport carts covered and wiped down						
22. Trash in appropriate containers						
23. All workers wearing ID badges (If no – provide #): _____						
24. FIRE WATCH IN EFFECT (note time complete)						
25. Compressed Gas Cylinders Secured						

Describe any deficiencies and specific actions taken to correct:					
Project Supervisor Signature – First Check		Date:		Time:	
Project Supervisor Signature – Second Check		Date:		Time:	

SECTION E – SOLICITATION PROVISIONS

52.212-1	INSTRUCTIONS TO OFFERORS – COMMERCIAL PRODUCTS AND COMMERCIAL SERVICES	NOV 2025 (DEVIATION)

(1) Volume 1 – Label "Administrative Documents." Signed and dated SF-1449 and all associated SF-30 amendments, if any. Submit one (1) copy.

(2) Volume 2 – Label "Statement of Work and Delivery/Schedule." A technical description and delivery schedule of the supplies and services being offered in sufficient detail to evaluate compliance with the requirements in the solicitation. This shall include product literature, and other documentation that demonstrates how the supplies and services offered meets – at a minimum – Attachment A, Statement of Work. This volume must also include information about delivery. NO PRICING INFORMATION SHALL BE INCLUDED IN THIS VOLUME. Submit one (1) copy.

(3) Volume 3 – Label "Past Performance." Provide past performance experience that has been successfully performed, at least three similar contracts within the past 3 years. Submit one (1) copy.

(4) Volume 4 – Label "Price." In addition to the total, bottom-line price; this volume must include supporting details beyond cost data, outlining key components (e.g., equipment, materials, delivery, labor, etc.) with a narrative to justify the overall quote or project budget. Submit one (1) copy.

Email Proposals to: flora.washington@ihs.gov
Submit by: July 9, 2026, 5:00PM MST
Submit documents in PDF format

Failure to follow instructions and/or to provide required information may render your quote unacceptable.

52.212-2	EVALUATION – COMMERCIAL PRODUCTS AND COMMERCIAL SERVICES	NOV 2025 (DEVIATION)

(a) *Evaluation factors.* The Government will award a contract resulting from this solicitation to the responsible Offeror whose proposal is Lowest Price Technically Acceptable (LPTA) in accordance with the evaluation criteria set forth herein.

Technical Acceptability is more important than Price. However, among technically acceptable offers, price will be the determining factor for award.

i. Technical Capability. The offeror must demonstrate that the services offered complies with the mandatory technical requirements described in Attachment A – Statement of Work.

ii. Experience of similar projects. The offeror must demonstrate that it has successfully performed at least three similar contracts within the past 3 years.

iii. Delivery; and

iv. Price

Submission of offerors. **For submission requirements, refer to the provision at 52.212-1 and any associated addenda. Failure to follow instructions and/or to provide required information may render your quote unacceptable.**

(b) *Options*. The Government will evaluate offers for award purposes by adding the total price for all options to the total price for the basic requirement. The Government may determine that an offer is unacceptable if the option prices are significantly unbalanced. Evaluation of options shall not obligate the Government to exercise the option(s).

(c) *Notice of award.* A written notice of award or acceptance of an offer, mailed or otherwise furnished to the successful offeror within the time for acceptance specified in the offer, shall result in a binding contract without further action by either party. Before the offer's specified expiration time, the Government may accept an offer (or part of an offer), whether or not there are negotiations after its receipt, unless a written notice of withdrawal is received before award.

(End of provision)

The following Federal Acquisition Regulations provisions incorporated by reference also apply:

☒	52.203-11	CERTIFICATION AND DISCLOSURE REGARDING PAYMENTS TO INFLUENCE CERTAIN FEDERAL TRANSACTIONS	SEP 2024
☒	52.203-18	PROHIBITION ON CONTRACTING WITH ENTITIES THAT REQUIRE CERTAIN INTERNAL CONFIDENTIALITY AGREEMENTS OR STATEMENTS-REPRESENTATION	JAN 2017
☒	52.204-7	SYSTEM FOR AWARD MANAGEMENT – REGISTRATION	NOV 2025 (DEVIATION)
☐	52.204-7 Alt I	SYSTEM FOR AWARD MANAGEMENT—REGISTRATION, WITH ALTERNATE I	NOV 2025 (DEVIATION)
☐	52.207-6	SOLICITATION OF OFFERS FROM SMALL BUSINESS CONCERNS AND SMALL BUSINESS TEAMING ARRANGEMENTS OR JOINT VENTURES (MULTIPLE-AWARD CONTRACTS)	AUG 2024
☐	52.209-12	CERTIFICATION REGARDING TAX MATTERS	OCT 2025
☐	52.216-31	TIME-AND-MATERIALS/LABOR-HOUR PROPOSAL REQUIREMENTS – COMMERCIAL ACQUISITION	NOV 2021
☐	52.219-4	NOTICE OF PRICE EVALUATION PREFERENCE FOR HUBZONE SMALL BUSINESS CONCERNS	NOV 2025 (DEVIATION)
☐	52.219-31	NOTICE OF SMALL BUSINESS RESERVE	MAR 2020
☐	52.222-18	CERTIFICATION REGARDING KNOWLEDGE OF CHILD LABOR FOR LISTED END PRODUCTS	FEB 2021
☐	52.222-48	EXEMPTION FROM APPLICATION OF THE SERVICE CONTRACT LABOR STANDARDS FOR MAINTENANCE, CALIBRATION, OR REPAIR OF CERTAIN EQUIPMENT–CERTIFICATION	MAY 2014
☐	52.222-52	EXEMPTION FROM APPLICATION OF THE SERVICE CONTRACT LABOR STANDARDS FOR CERTAIN SERVICES-CERTIFICATION	MAY 2014
☐	52.222-56	CERTIFICATION REGARDING TRAFFICKING IN PERSONS COMPLIANCE PLAN	OCT 2020
☒	52.223-1	BIOBASED PRODUCT CERTIFICATION	MAY 2024
☐	52.223-4	RECOVERED MATERIAL CERTIFICATION	MAY 2008
☐	52.229-11	TAX ON CERTAIN FOREIGN PROCUREMENTS—NOTICE AND REPRESENTATION	AUG 2025 (DEVIATION)

☐	52.237-1	SITE VISIT	APR 1984
☒	52.240-90	SECURITY PROHIBITIONS AND EXCLUSIONS REPRESENTATIONS AND CERTIFICATIONS	NOV 2025 (DEVIATION)

52.209-2	PROHIBITION ON CONTRACTING WITH INVERTED DOMESTIC CORPORATIONS – REPRESENTATION	NOV 2025 (DEVIATION)

(a) *Definitions*. As used in this clause—

Inverted domestic corporation means a foreign incorporated entity that meets the definition of an inverted domestic corporation under 6 U.S.C. 395(b), applied in accordance with the rules and definitions of 6 U.S.C. 395(c).

Subsidiary means an entity in which more than 50 percent of the entity is owned—
(1) Directly by a parent corporation; or
(2) Through another subsidiary of a parent corporation.

(b) Government agencies are not permitted to use appropriated (or otherwise made available) funds for contracts with either an inverted domestic corporation, or a subsidiary of an inverted domestic corporation, unless the exception at 9.108-3(b) applies or the requirement is waived in accordance with the procedures at 9.108-5.

(c) *Representation*. The Offeror represents that-
(1) It □ is, □ is not an inverted domestic corporation; and
(2) It □ is, □ is not a subsidiary of an inverted domestic corporation.

(End of provision)

52.209-11	REPRESENTATION BY CORPORATIONS REGARDING DELINQUENT TAX LIABILITY OR A FELONY CONVICTION UNDER ANY FEDERAL LAW	NOV 2025 (DEVIATION)

(a) The Government will not enter into a contract with any corporation that—

(1) Has any unpaid Federal tax liability that has been assessed, for which all judicial and administrative remedies have been exhausted or have lapsed, and that is not being paid in a timely manner pursuant to an agreement with the authority responsible for collecting the tax liability, where the awarding agency is aware of the unpaid tax liability, unless an agency has considered suspension or debarment of the corporation and made a determination that suspension or debarment is not necessary to protect the interests of the Government; or

(2) Was convicted of a felony criminal violation under any Federal law within the preceding 24 months, where the awarding agency is aware of the conviction, unless an agency has considered suspension or debarment of the corporation and made a determination that this action is not necessary to protect the interests of the Government.

(b) The Offeror represents that–
(1) It is □ is not □ a corporation that has any unpaid Federal tax liability that has been assessed, for which all judicial and administrative remedies have been exhausted or have lapsed, and that is not being paid in a timely manner pursuant to an agreement with the authority responsible for collecting the tax liability; and

(2) It is □ is not □ a corporation that was convicted of a felony criminal violation under a Federal law within the preceding 24 months.

(End of provision)

52.225-6	TRADE AGREEMENTS CERTIFICATE	FEB 2021

(a) The offeror certifies that each end product, except those listed in paragraph (b) of this provision, is a U.S.-made or designated country end product, as defined in the clause of this solicitation entitled "Trade Agreements."

(b) The offeror shall list as other end products those supplies that are not U.S.-made or designated country end products.

Other End Products:

Line Item No.	Country of Origin

[*List as necessary*]

(c) The Government will evaluate offers in accordance with the policies and procedures of FAR part 25. For line items covered by the WTO GPA, the Government will evaluate offers of U.S.-made or designated country end products without regard to the restrictions of the Buy American statute. The Government will consider for award only offers of U.S.-made or designated country end products unless the Contracting Officer determines that there are no offers for such products or that the offers for such products are insufficient to fulfill the requirements of the solicitation.

(End of Provision)

52.252-1	SOLICITATION PROVISIONS INCORPORATED BY REFERENCE	FEB 1998

This solicitation incorporates one or more solicitation provisions by reference, with the same force and effect as if they were given in full text. Upon request, the Contracting Officer will make their full text available. The offeror is cautioned that the listed provisions may include blocks that must be completed by the offeror and submitted with its quotation or offer. In lieu of submitting the full text of those provisions, the offeror may identify the provision by paragraph identifier and provide the appropriate information with its quotation or offer. Also, the full text of a solicitation provision may be accessed electronically at this/these address(es):

Revolutionary FAR Overhaul - FAR Overhaul - FAR Part Deviation Guidance | Acquisition.GOV

Federal Acquisition Regulation - https://www.acquisition.gov/browse/index/far

Department of Health and Human Services Acquisition Regulation – https://www.acquisition.gov/hhsar

(End of Provision)

52.252-5	AUTHORIZED DEVIATIONS IN PROVISIONS	NOV 2020

(a)The use in this solicitation of any Federal Acquisition Regulation (48 CFR Chapter 1) provision with an authorized deviation is indicated by the addition of "(DEVIATION)" after the date of the clause.

(b)The use in this solicitation of any Department of Health and Human Services (48 CFR Chapter 3) provision with an authorized deviation is indicated by the addition of "(DEVIATION)" after the name of the regulation.

(End of Provision)

The following Department of Health and Human Services Acquisition Regulation provisions also apply:

☐	352.219-70	MENTOR-PROTÉGÉ PROGRAM	DEC 2015
☐	352.223-71	INSTRUCTIONS TO OFFERORS – SUSTAINABLE ACQUISITION	DEC 2015
☒	352.226-4	NOTICE OF INDIAN SMALL BUSINESS ECONOMIC ENTERPRISE SET ASIDE	MAR 2022
☐	352.226-5	NOTICE OF INDIAN ECONOMIC ENTERPRISE SET ASIDE	MAR 2022
☒	352.226-7	INDIAN ECONOMIC ENTERPRISE REPRESENTATION	MAR 2022
☐	352.239-73	ELECTRONIC AND INFORMATION TECHNOLOGY ACCESSIBILITY NOTICE	DEC 2015